Product data sheet

Specifications

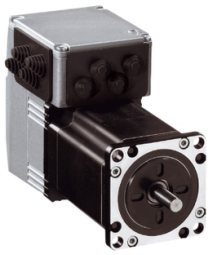

integrated drive ILS with stepper motor - 24..36 V - RS485 - 3.5 A

ILS1R572PC1A0

Product availability: Non-Stock - Not normally stocked in distribution facility

Main

Range of Product	Lexium integrated drive
Product or Component Type	Motion integrated drive
Device short name	ILS
Motor Type	3-phase stepper motor
Number of motor poles	6
Phase	Single phase
[Us] rated supply voltage	36 V 24 V
Network type	DC
Communication interface	RS485, Integrated
Length	4.6 in (115.9 mm)
Winding type	Medium speed of rotation and medium torque
Electrical Connection	Industrial connector
Holding brake	Without
Gear box type	Without
Nominal speed	300 rpm 24 V 600 rpm 36 V
Nominal torque	8.0 lbf.in (0.9 N.m)
Holding torque	9.03 lbf.in (1.02 N.m)

Complementary

Transmission Rate	9.6, 19.2 and 38.4 kbauds
Mounting Support	Flange
Motor flange size	2.2 in (57 mm)
Number of motor stacks	2
Centring collar diameter	1.5 in (38.1 mm)
Centring collar depth	0.06 in (1.6 mm)
Number of mounting holes	4
Mounting holes diameter	0.2 in (5.2 mm)
Circle diameter of the mounting holes	2.6 in (66.6 mm)
Feedback type	Index pulse
Shaft end	Untapped

Price is “List Price” and may be subject to a trade discount – check with your local distributor or retailer for actual price.

Disclaimer: This documentation is not intended as a substitute for and is not to be used for determining suitability or reliability of these products for specific user applications

Second shaft	Without second shaft end
Shaft diameter	0.25 in (6.35 mm)
Shaft length	0.8 in (21 mm)
Supply voltage limits	18…40 V
Current consumption	3500 mA maximum
Associated fuse rating	10 A
Input/output type	4 signals (each be used as input or output)
Voltage state 0 guaranteed	-3...4.5 V
Voltage state 1 guaranteed	15...30 V
Discrete input current	10 mA at 24 V on/STO_A safety input 3 mA at 24 V on/STO_B safety input 2 mA at 24 V 24 V signal interface
Discrete output voltage	23...25 V
Maximum switching current	100 mA per output 200 mA total
Protection Type	Safe torque off Overload of output voltage Short circuit of the output voltage
Peak stall torque	8.0 lbf.in (0.9 N.m)
Continuous stall torque	8.0 lbf.in (0.9 N.m)
Speed feedback resolution	20000 points/turn
Accuracy error	+/- 6 arc min
Rotor inertia	0.22 kg.cm²
Maximum mechanical speed	3000 rpm
Maximum radial force Fr	24 N
Maximum axial force Fa	100 N tensile force) 8.4 N force pressure)
Service life in hours	20000 h bearing
Marking	CE
Type of cooling	Natural convection
Product Weight	3.5 lb(US) (1.6 kg)

Environment

Standards	IEC 60072-1 IEC 61800-3 IEC 61800-3, Ed 2 EN 61800-3:2001, second environment IEC 50347 EN 61800-3 : 2001-02 IEC 50178
Product Certifications	TÜV cUL UL
Ambient air temperature for operation	122…149 °F (50…65 °C) (with power derating of 2 % per °C) 32…122 °F (0…50 °C) (without derating)
Permissible ambient air temperature around the device	221 °F (105 °C) power amplifier 230 °F (110 °C) motor
Ambient Air Temperature for Storage	-13…158 °F (-25…70 °C)

Operating altitude	<= 3280.84 ft (1000 m) without derating
Relative humidity	15…85 % without condensation
Vibration resistance	20 m/s² 10…500 Hz) 10 cycles IEC 60068-2-6
Shock resistance	150 m/s² 1000 shocks IEC 60068-2-29
IP degree of protection	IP41 shaft bushing: conforming to IEC 60034-5 IP54 total except shaft bushing: conforming to IEC 60034-5

Ordering and shipping details

Category	US1PC5618288
Discount Schedule	PC56
GTIN	3389119227407
Returnability	No
Country of origin	DE

Packing Units

Unit Type of Package 1	PCE
Nbr. of units in pkg.	1
Package 1 Height	4.1 in (10.5 cm)
Package 1 Width	7.5 in (19.0 cm)
Package 1 Length	15.4 in (39.0 cm)
Package weight(Lbs)	5.3 lb(US) (2.4 kg)

Contractual warranty

Warranty (in months)	18

Environmental Data

Schneider Electric aims to achieve Net Zero status by 2050 through supply chain partnerships, lower impact materials, and circularity via our ongoing “Use Better, Use Longer, Use Again” campaign to extend product lifetimes and recyclability.

Environmental Data explained

How we assess product sustainability

Environmental footprint

Total lifecycle Carbon footprint	**421 kg CO2 eq.**
Carbon footprint of the manufacturing phase [A1 to A3]	**29 kg CO2 eq.**
Carbon footprint of the distribution phase [A4]	**4 kg CO2 eq.**
Carbon footprint of the installation phase [A5]	**1 kg CO2 eq.**
Carbon footprint of the use phase [B2, B3, B4, B6]	**385 kg CO2 eq.**
Carbon footprint of the end-of-life phase [C1 to C4]	**3 kg CO2 eq.**
Environmental Disclosure	**Product Environmental Profile**

Use Better

Materials and Substances

Packaging made with recycled cardboard	**Yes**
Packaging without single use plastic	**No**
SCIP Number	**F800009a-26ea-46d4-b613-164e8055f98f**
EU RoHS Directive	**Compliant By Exemption**
REACh Regulation	**Reference contains Substances of Very High Concern above the threshold**
California proposition 65	**WARNING: This product can expose you to chemicals including: Lead and lead compounds, which is known to the State of California to cause cancer and birth defects or other reproductive harm. For more information go to www.P65Warnings.ca.gov**
PVC free	**Yes**

Use Longer

Lifetime extension

Repair	**No**

Use Again

Repack and remanufacture

Recyclability potential, in %	**85**
Circularity Profile	**End of Life Information**
Take-back	**No**
WEEE Label	**The product must be disposed on European Union markets following specific waste collection and never end up in rubbish bins.**

Dimensions

Integrated Drive

Dimensions

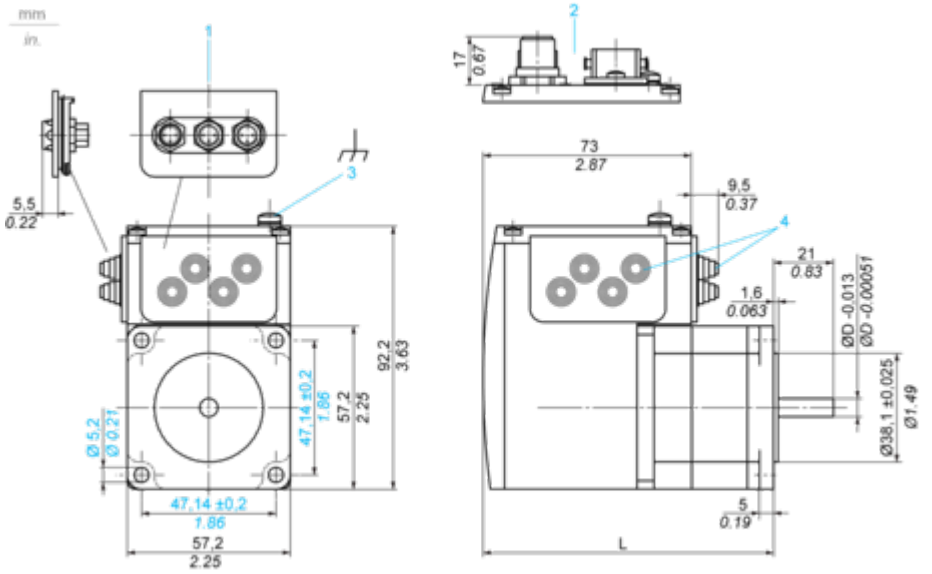

1 Accessories: I/O signal insert with industrial connectors
2 Option: industrial connectors
3 Earth (ground) terminal
4 Accessories: cable entries Ø = 3 ... 9 mm/0.12 ... 0.35 in.
L 115.9 mm/4.56 in.
D 6.35 mm/0.25 in.

Wiring

Connection Example with 4 I/O Signals

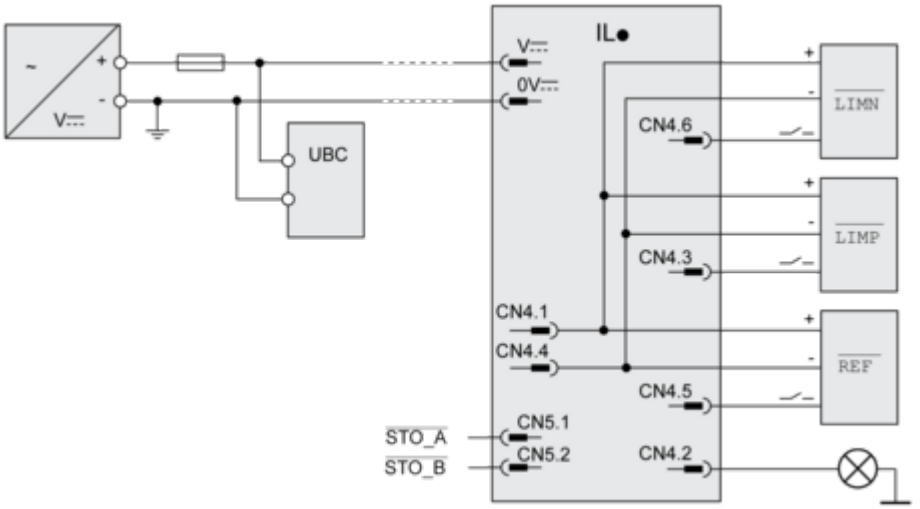

PerformanceCurves

Torque Characteristics

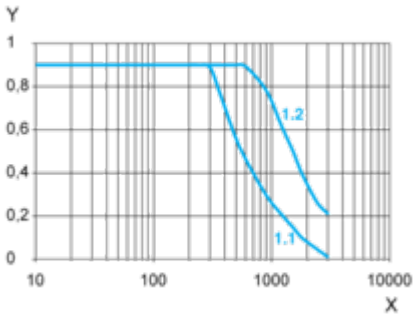

X Speed of rotation in rpm
Y Torque in Nm
1.1 Max. torque at 24 V
1.2 Max. torque at 36 V