ILS1M

Lexium Integrated Drive
Product manual

V2.00, 09.2008

0198441113556, V2.00, 09.2008

Schneider Electric

Important information

This manual is part of the product.

Carefully read this manual and observe all instructions.

Keep this manual for future reference.

Hand this manual and all other pertinent product documentation over to all users of the product.

Carefully read and observe all safety instructions and the chapter "Before you begin - safety information".

Some products are not available in all countries.
For information on the availability of products, please consult the catalog.

Subject to technical modifications without notice.

All details provided are technical data which do not constitute warranted qualities.

Most of the product designations are registered trademarks of their respective owners, even if this is not explicitly indicated.

0198441113556, V2.00, 09.2008

Table of Contents

Important information 2

Table of Contents 3

Writing conventions and symbols 7

1 Introduction 9

1.1 About this manual 9

1.2 Unit overview 9

1.3 Components and interfaces 11
1.3.1 Components 12
1.3.2 Interfaces 12

1.4 Name plate 13

1.5 Type code 14

1.6 Documentation and literature references 15

1.7 Declaration of conformity 16

1.8 TÜV certificate for functional safety 17

2 Before you begin - safety information 19

2.1 Qualification of personnel 19

2.2 Intended use 19

2.3 Hazard categories 20

2.4 Basic information 21

2.5 Functional safety 22

2.6 Standards and terminology 23

3 Technical Data 25

3.1 Certifications 25

3.2 Ambient conditions 25

3.3 Mechanical data 27
3.3.1 Degree of protection 27
3.3.2 Mounting position 28
3.3.3 Dimensions 29

3.4 Electrical Data 31
3.4.1 Supply Voltage VDC at CN1 31
3.4.2 Multifunction interface at CN2 32
3.4.3 Commissioning at CN3 32
3.4.4 24V signals to CN4 33
3.4.5 STO safety function at CN5 and CN6 33

3.5 Conditions for UL 508C 34

0198441113556, V2.00, 09.2008

4 Basics 35

4.1 Functional safety. 35

5 Engineering. 37

5.1 External power supply units 37
5.1.1 Supply voltage 37

5.2 Ground design 39

5.3 Safety function STO ("Safe Torque Off"). 40
5.3.1 Definitions 40
5.3.2 Function 40
5.3.3 Requirements for using the safety function 41
5.3.4 Application examples STO. 43

5.4 Monitoring functions 44

6 Installation. 45

6.1 Electromagnetic compatibility, EMC 46

6.2 Mechanical installation 47

6.3 Electrical installation. 50
6.3.1 Wiring examples 51
6.3.2 Overview of all connections 52
6.3.3 Connection via cable entry. 53
6.3.4 Connection with industrial connectors 56
6.3.5 Connection of VDC supply voltage 56
6.3.6 Connection of multifunction interface. 59
6.3.7 RS485 connection 61
6.3.8 24V signal interface connection. 62
6.3.9 Connection of STO safety function 65

6.4 Connection accessories 67
6.4.1 Accessory "Cable, Power, Motion Sequence, I/O, STO" 67
6.4.2 Accessory "Cable, Power, Motion Sequence" 69

6.5 Checking wiring 70

7 Commissioning. 71

7.1 Preparing for commissioning 73

7.2 Running commissioning 74
7.2.1 First setup 74
7.2.2 Starting 24V signal interface 77
7.2.3 Setting the motor phase currents. 80
7.2.4 Testing safety functions 81
7.2.5 Optimizing the motor behavior. 82

7.3 Lexium CT commissioning software. 84
7.3.1 Firmware update via fieldbus. 85
7.3.2 Scaling. 85

0198441113556, V2.00, 09.2008

8 Operation 87

8.1 Basics 87
8.1.1 Default parameter values 87
8.1.2 External monitoring signals 88
8.1.3 Positioning limits 89
8.1.4 Internal monitoring signals 90
8.1.5 Operating states and state transitions 91
8.1.6 Operating-mode-specific status information 93
8.1.7 Other status information 94

8.2 Control mode "Motion Sequence" 95
8.2.1 Overview 95
8.2.2 Selection of processing mode 96
8.2.3 Global settings 97
8.2.4 Description of signal outputs 97
8.2.5 Definition of the motion profiles 98
8.2.6 Structure of a data set 99
8.2.7 Switching on the drive 101
8.2.8 Processing mode "Direct selection of data sets" . . 102
8.2.9 Processing mode "Sequential selection of data sets" 104
8.2.10 Characteristics of the drive 108

8.3 Operating modes 109
8.3.1 Operating mode Jog 109
8.3.2 Operating mode Profile position 111
8.3.3 Operating mode Homing 113

8.4 Functions 118
8.4.1 Definition of the direction of rotation 118
8.4.2 Motion profile 118
8.4.3 Quick Stop 119
8.4.4 Programmable inputs and outputs 120
8.4.5 Function of the holding brake 124

9 Diagnostics and troubleshooting 127

9.1 Error indication and troubleshooting 127
9.1.1 Diagnostics via commissioning software 127
9.1.2 Operation state and error indication 128
9.1.3 Reset error message 128
9.1.4 Error classes and error response 128

9.2 Overview of error numbers 129

10 Parameters 133

10.1 Representation of parameters 133

10.2 Overview Parameters 134

10.3 Parameter groups 135
10.3.1 Parameter group "Config" 135
10.3.2 "DataSet" parameter group 135
10.3.3 Parameter group "Homing" 136

0198441113556, V2.00, 09.2008

10.3.4 Parameter group "I/O" 137
10.3.5 Parameter group "Manual" 138
10.3.6 Parameter group "Motion" 138
10.3.7 Parameter group "ProgIO0" 139
10.3.8 Parameter group "PTP" 140
10.3.9 Parameter group "RS485" 141
10.3.10 Parameter group "Settings" 141
10.3.11 Parameter group "Status" 142

11 Accessories and spare parts 147

11.1 Accessories 147

11.2 Gearboxes 148

12 Service, maintenance and disposal 149

12.1 Service address 150

12.2 Maintenance 150
12.2.1 Lifetime STO safety function 150

12.3 Replacing units 151

12.4 Shipping, storage, disposal. 151

13 Glossary 153

13.1 Units and conversion tables 153
13.1.1 Length 153
13.1.2 Mass 153
13.1.3 Force 153
13.1.4 Power 153
13.1.5 Rotation 154
13.1.6 Torque 154
13.1.7 Moment of inertia 154
13.1.8 Temperature 154
13.1.9 Conductor cross section 154

13.2 Terms and Abbreviations 155

14 Index 157

0198441113556, V2.00, 09.2008

Writing conventions and symbols

Work steps

If work steps must be performed consecutively, this sequence of steps is represented as follows:

■ Special prerequisites for the following work steps

▶ Step 1

◁ Specific response to this work step

▶ Step 2

If a response to a work step is indicated, this allows you to verify that the work step has been performed correctly.

Unless otherwise stated, the individual steps must be performed in the specified sequence.

Bulleted lists

The items in bulleted lists are sorted alphanumerically or by priority. Bulleted lists are structured as follows:

- Item 1 of bulleted list
- Item 2 of bulleted list
  - Subitem for 2
  - Subitem for 2
- Item 3 of bulleted list

Making work easier

Information on making work easier is highlighted by this symbol:

Sections highlighted this way provide supplementary information on making work easier.

Parameters

Parameters are shown as follows:

`Gruppe.Name Index:Subindex`

SI units

SI units are the original values. Converted units are shown in brackets behind the original value; they may be rounded.

Example:
Minimum conductor cross section: 1.5 mm^2 (AWG 14)

0198441113556, V2.00, 09.2008

0198441113556, V2.00, 09.2008

1 Introduction

1.1 About this manual

This manual is valid for all ILS1M standard products. This chapter lists the type code for this product. The type code can be used to identify whether your product is a standard product or a customized model.

1.2 Unit overview

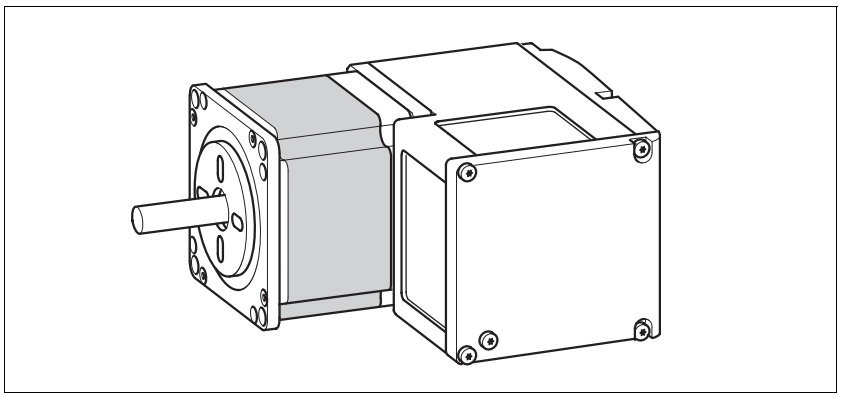

Figure 1.1 Device overview

The "Lexium Integrated Drive" consists of a stepper motor and integrated electronics. The product integrates interfaces, control electronics, a holding brake (optional) and the power stage.

Reference value supply

The "Lexium Integrated Drive" moves the motor in accordance with the program in control mode "Motion Sequence".

0198441113556, V2.00, 09.2008

Description

In the control mode "Motion Sequence", the motor is controlled by means of data sets that can be programmed as required.

The drive parameters are set and the data sets are programmed with the commissioning software.

There are 2 processing modes for the data sets:

- Direct selection of the data sets

  Direct selection of the data sets is used if a master controller (e.g. PLC) is in charge of the time coordination between the various data sets. The number of the data set to be processed is selected directly via signal inputs. The activation of the selected data set is triggered by a signal. This way, all data sets can be selected directly.

- Sequential selection of the data sets

  Sequential selection of the data sets is typically used with simple processing sequences. The time coordination between the various data sets and their sequence is defined in the drive. The time coordination is programmed in the individual data sets by setting transition conditions and a subsequent data set. A rising edge at the signal input START is an example of such a transition condition. The data set with which the sequential selection of data sets is to start is specified via the signal inputs. The data set that is to follow in the sequence is defined within the data set.

Safety function

The integrated safety function STO (IEC 61800-5-2) meets the requirements of Safety Integrity Level SIL2. The safety function allows for a category 0 stop as per EN 60204-1 without external power contactors. It is not necessary to interrupt the supply voltage. This reduces the system costs and the response times.

Using the library considerably facilitates controlling the device. The library is available for download from the Internet.
http://www.schneider-electric.com

0198441113556, V2.00, 09.2008

1.3 Components and interfaces

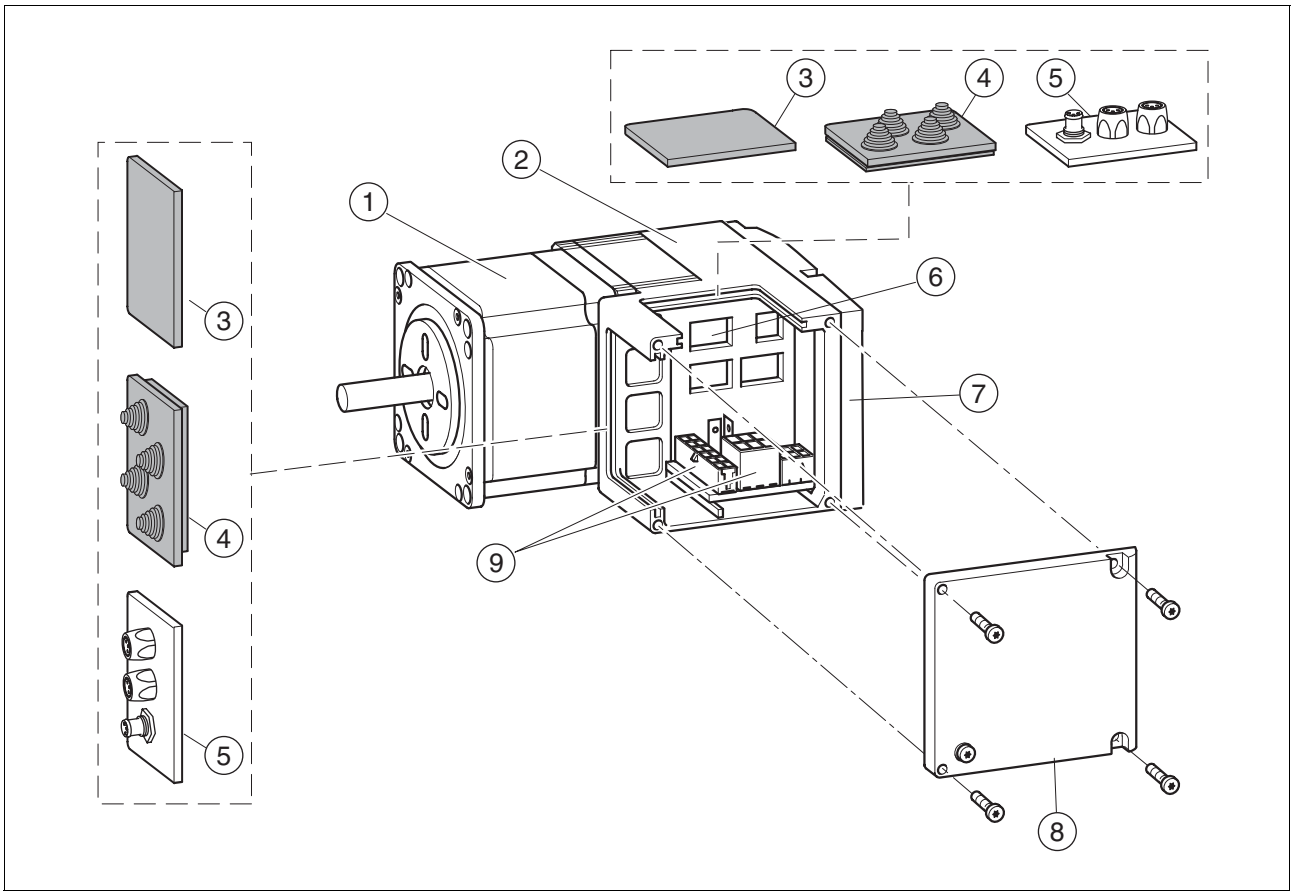

Figure 1.2 Components and interfaces

(1) 3-phase stepper motor
(2) Electronics housing
(3) Insert for sealing (accessory)
(4) Insert with cable entry (accessory)
(5) I/O insert with industrial connector (accessory)
(6) Switches for settings
(7) Cover of electronics housing, must not be removed
(8) Cover of connector housing, to be removed for installation
(9) Electrical interfaces

0198441113556, V2.00, 09.2008

1.3.1 Components

Motor The motor is a brushless 3-phase stepper motor. The motor has a high power density due to the use of the latest magnetic materials and an optimized design.

Electronics The electronic system comprises control electronics and power stage. They have a common power supply and are not galvanically isolated.

Holding brake The drive can optionally be equipped with an integrated holding brake. The holding brake is controlled automatically.

1.3.2 Interfaces

Standard available interfaces:

Supply voltage VDC The supply voltage VDC supplies the control electronics and the power stage.

The ground connections of all interfaces are galvanically connected. For more information see chapter 5.2 "Ground design". This chapter also provides information on protection against reverse polarity.

Communication interface The RS485 interface is used for commissioning the drive. The commissioning software is used for parameterization.

A PC can be connected to the interface via an RS485-RS232 converter so that the communication interface can be used for service purposes. The commissioning software can then be used for tasks such as reading the error memory or monitoring the temperature.

The RS485 interface can be used for firmware updates.

Multifunction interface This interface is used for the "Motion Sequence" control mode. Data sets can be selected and started directly via inputs. Special output functions can also be parameterized.

24 V signal interface 4 digital 24V signals are available. Each of them can be used as an input or outputs.

The 24V signals are availab le to the master controller. However, it is also possible to parameterize special functions such as connection of limit switches.

0198441113556, V2.00, 09.2008

1.4 Name plate

The nameplate contains the following data:

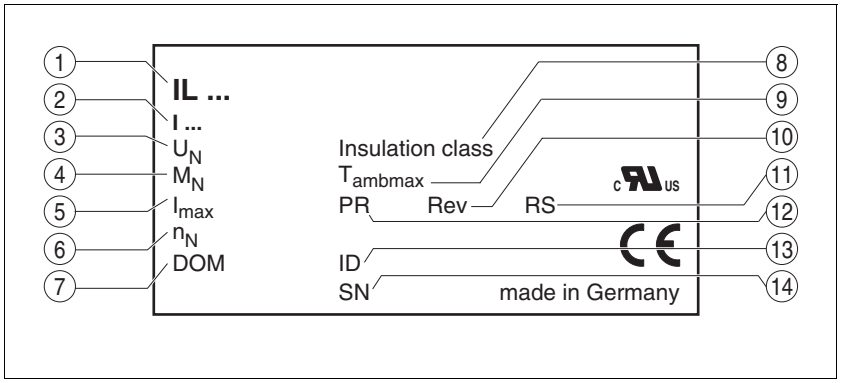

Figure 1.3 Nameplate

(1) Type code
(2) Type code (old designation)
(3) Nominal voltage
(4) Nominal torque
(5) Maximum input current
(6) Nominal speed
(7) Date of manufacture
(8) Thermal class
(9) Maximum ambient air temperature
(10) Software revision
(11) Hardware revision
(12) Firmware number
(13) Material number
(14) Serial Number

0198441113556, V2.00, 09.2008

1.5 Type code

ILS	1	M	57	1	P	B	1	A	0	--

Motor
ILS = Stepper motor

Supply voltage
1 = 24 ... 36 V_{DC}

Communication interface
M = Motion sequence

Size
57 = 57 mm
85 = 85 mm

Length
1 = 1 stack
2 = 2 stacks
3 = 3 stacks

Winding
P = Medium speed of rotation/medium torque

Connection version
B = Printed circuit board connector

Position capture
1 = Stepper motor with index pulse

Holding brake
A = Without holding brake
F = With holding brake

Gearbox
0 = Without gearbox

Reserved

Customized product In the case of a customized product, position 9 is an "S". Positions 10 ... 13 are the number of the customized product.

Example: IL••••••S1234--

0198441113556, V2.00, 09.2008

1.6 Documentation and literature references

Source product manuals

The current product manuals are available for download from the Internet.
http://www.schneider-electric.com

Source EPLAN Macros

For easier engineering, macro files and product master data are available for download from the Internet at:

http://www.schneider-electric.com

Additional literature

We recommend the following literature for more in-depth information:

- Ellis, George: Control System Design Guide. Academic Press
- Kuo, Benjamin; Golnaraghi, Farid: Automatic Control Systems. John Wiley & Sons

0198441113556, V2.00, 09.2008

1.7 Declaration of conformity

SCHNEIDER ELECTRIC MOTION DEUTSCHLAND GmbH & Co. KG
Breslauer Str. 7 D-77933 Lahr

EC DECLARATION OF CONFORMITY
YEAR 2008

☒ according to EC Directive Machinery 98/37/EC
☒ according to EC Directive EMC 2004/108/EC
☐ according to EC Directive Low Voltage 2006/95/EC

We declare that the products listed below meet the requirements of the mentioned EC Directives with respect to design, construction and version distributed by us. This declaration becomes invalid with any modification on the products not authorized by us.

Designation:	Motors with integrated control electronics
Type:	ILA, ILE, ILS
Product number:	0x6600xxxxxxx, 0x6610xxxxxxx, 0x66206xxxxxx, 0x66307xxxxxx 0x6640xxxxxxx, 0x66606xxxxxx, 0x66707xxxxxx
Applied harmonized standards, especially:	EN ISO 13849-1:2006, Performance Level "d" (category 3) EN 61800-3:2004, second environment EN 62061:2005, SILcl 2 EN 61508:2001, SIL 2
Applied national standards and technical specifications, especially:	UL 508C Product documentation
Company stamp:	Schneider Electric Motion Deutschland GmbH & Co. KG Postfach 11 80 • D-77901 Lahr Breslauer Str. 7 • D-77933 Lahr
Date/ Signature:	10 July 2008
Name/ Department:	Wolfgang Brandstätter/Development

0198441113556, V2.00, 09.2008

1.8 TÜV certificate for functional safety

TÜV NORD

Certificate

TÜV NORD SysTec GmbH & Co. KG hereby certifies

Schneider Electric Motion GmbH
Breslauerstr.7
77933 Lahr

for the realisation of the functions "Safe Torque Off" (STO)
and "Emergency Stop" in the drive

IclA Ixx

meets the requirements listed in the below mentioned standards

- IEC61508:2000; SIL 2
- ISO 13849-1:2006; PL d (category 3)
- IEC 62061:2005; SILcl2

based on report Nr. SAS-127/2007TB and the version releases procedure list in the appendix in the valid version.
This certificate entitles the holder to use the mark

TÜV NORD Certification
Safety Approved
IclA Ixx
IEC 61508:2000
SIL 2
ISO 13849-1:2006
PL d (category 3)
IEC 62061:2005
SILcl2
SAS1728/08
Voluntary Certification

Valid until: 2013-01-09
Certificate No.: SAS1728/08, Vers. 1.2
File Reference: M.IB5.03.141.01.SLA

Augsburg, 2008-04-01

TÜV NORD SysTec GmbH & Co. KG
Branch South
Halderstraße 27
86150 Augsburg
Germany

Dr. Immanuel Höfer

08

BA51-10

0198441113556, V2.00, 09.2008

0198441113556, V2.00, 09.2008

2 Before you begin - safety information

2.1 Qualification of personnel

Only appropriately trained persons who are familiar with and understand the contents of this manual and all other pertinent product documentation are authorized to work on and with this product. In addition, these persons must have received safety training to recognize and avoid hazards involved. These persons must have sufficient technical training, knowledge and experience and be able to foresee and detect potential hazards that may be caused by using the product, by changing the settings and by the mechanical, electrical and electronic equipment of the entire system in which the product is used.

All persons working on and with the product must be fully familiar with all applicable standards, directives, and accident prevention regulations when performing such work.

2.2 Intended use

This product is a motor with an integrated drive and intended for industrial use according to this manual.

The product may only be used in compliance with all applicable safety regulations and directives, the specified requirements and the technical data.

Prior to using the product, you must perform a risk assessment in view of the planned application. Based on the results, the appropriate safety measures must be implemented.

Since the product is used as a component in an entire system, you must ensure the safety of persons by means of the design of this entire system (e.g. machine design).

Operate the product only with the specified cables and accessories. Use only genuine accessories and spare parts.

The product must NEVER be operated in explosive atmospheres (hazardous locations, Ex areas).

Any use other than the use explicitly permitted is prohibited and can result in hazards.

Electrical equipment should be installed, operated, serviced, and maintained only by qualified personnel.

0198441113556, V2.00, 09.2008

2.3 Hazard categories

Safety instructions to the user are highlighted by safety alert symbols in the manual. In addition, labels with symbols and/or instructions are attached to the product that alert you to potential hazards.

Depending on the seriousness of the hazard, the safety instructions are divided into 4 hazard categories.

⚠ DANGER

DANGER indicates an imminently hazardous situation, which, if not avoided, **will result** in death or serious injury.

⚠ WARNING

WARNING indicates a potentially hazardous situation, which, if not avoided, **can result** in death, serious injury, or equipment damage.

⚠ CAUTION

CAUTION indicates a potentially hazardous situation, which, if not avoided, **can result** in injury or equipment damage.

CAUTION

CAUTION used without the safety alert symbol, is used to address practices not related to personal injury (e.g. **can result** in equipment damage).

0198441113556, V2.00, 09.2008

2.4 Basic information

⚠ DANGER

UNINTENDED CONSEQUENCES OF EQUIPMENT OPERATION

When the system is started, the drives are usually out of the operator's view and cannot be visually monitored.

- Only start the system if there are no persons in the hazardous area.

Failure to follow these instructions will result in death or serious injury.

⚠ WARNING

UNEXPECTED MOVEMENT

Drives may perform unexpected movements because of incorrect wiring, incorrect settings, incorrect data or other errors.

Interference (EMC) may cause unpredictable responses in the system.

- Carefully install the wiring in accordance with the EMC requirements.
- Switch off the voltage at the inputs $\overline{\text{STO_A}}$ ($\overline{\text{PWRR_A}}$) and $\overline{\text{STO_B}}$ ($\overline{\text{PWRR_B}}$) to avoid an unexpected restart of the motor before switching on and configuring the drive system.
- Do NOT operate the drive system with unknown settings or data.
- Perform a comprehensive commissioning test.

Failure to follow these instructions can result in death or serious injury.

0198441113556, V2.00, 09.2008

⚠ WARNING

LOSS OF CONTROL

- The designer of any control scheme must consider the potential failure modes of control paths and, for certain critical functions, provide a means to achieve a safe state during and after a path failure. Examples of critical control functions are EMERGENCY STOP, overtravel stop, power outage and restart.
- Separate or redundant control paths must be provided for critical functions.
- System control paths may include communication links. Consideration must be given to the implication of unanticipated transmission delays or failures of the link.
- Observe the accident prevention regulations and local safety guidelines. [1)]
- Each implementation of the product must be individually and thoroughly tested for proper operation before being placed into service.

Failure to follow these instructions can result in death or serious injury.

1) For USA: Additional information, refer to NEMA ICS 1.1 (latest edition), Safety Guidelines for the Application, Installation, and Maintenance of Solid State Control and to NEMA ICS 7.1 (latest edition), Safety Standards for Construction and Guide for Selection, Installation for Construction and Operation of Adjustable-Speed Drive Systems.

⚠ CAUTION

UNEXPECTED BEHAVIOR AND DESTRUCTION OF SYSTEM COMPONENTS

When you work on the wiring and when you unplug or plug in connectors, this may cause unexpected behavior and destruction of system components.

- Switch the power supply off before working on the wiring.

Failure to follow these instructions can result in injury or equipment damage.

2.5 Functional safety

Using the safety functions integrated in this product requires careful planning. For more information see chapter5.3 "Safety function STO ("Safe Torque Off")" on page 40.

0198441113556, V2.00, 09.2008

2.6 Standards and terminology

Technical terms, terminology and the corresponding descriptions in this manual are intended to use the terms or definitions of the pertinent standards.

In the area of drive systems, this includes, but is not limited to, terms such as "safety function", "safe state", "fault", "fault reset", "failure", "error", "error message", "warning", "warning message", "alarm", etc.

Among others, these standards include:

- IEC 61800 series: "Adjustable speed electrical power drive systems"
- IEC 61800-7 series: "Adjustable speed electrical power drive systems - Part 7-1: Generic interface and use of profiles for power drive systems - Interface definition"
- IEC 61158 series: "Industrial communication networks - Fieldbus specifications"
- IEC 61784 series: "Industrial communication networks - Profiles"
- IEC 61508 series: "Functional safety of electrical/electronic/programmable electronic safety-related systems"

Also see the glossary at the end of this manual.

0198441113556, V2.00, 09.2008

3 Technical Data

This chapter contains information on the ambient conditions and on the mechanical and electrical properties of the device family and the accessories.

3.1 Certifications

Product certifications:

Certified by	Assigned number	Validity
TÜV Nord	SAS-1728/08	2013-01-09
UL	File E 153659	

Certified safety function

This product has the following certified safety function:

- Safety function STO "Safe Torque Off" (IEC 61800-5-2)

3.2 Ambient conditions

Ambient temperature during operation

The maximum permissible ambient temperature during operation depends on the distance between the devices and the required power. Observe the pertinent instructions in the chapter Installation.

Operating temperature [1) 2)]	[°C]	0 ... 50
Operating temperature with current reduction of 2% per Kelvin [1)]	[°C]	50 ... 65

1) Limit values with flanged motor (steel plate 300x300x10 mm)
2) If the product is to be used in compliance with UL 508C, note the information provided in chapter 3.5 "Conditions for UL 508C".

Ambient conditions transportation and storage

The environment during transport and storage must be dry and free from dust. The maximum vibration and shock load must be within the specified limits.

Temperature	[°C]	-25 ... +70

Temperature

Max. temperature of power stage [1)]	[°C]	105
Max. temperature of motor [2)]	[°C]	110

1) Can be read via parameter
2) Measured on the surface

Relative humidity

The following relative humidity is permissible during operation:

Relative humidity (non-condensing)	[%]	15 ... 85

0198441113556, V2.00, 09.2008

Installation altitude

The installation altitude is defined as height above sea level.

Installation altitude	[m]	≤1000

Vibration and shock

Vibartion, sinusoidal	As per IEC/EN 60068-2-6 0.15 mm (from 10 Hz ... 60 Hz) 20 m/s^2 (from 10 Hz ... 500 Hz)
Shock, semi-sinusoidal	As per IEC/EN 60068-2-27: 150 m/s^2 (11 ms)

EMC

Emission	IEC/EN 61800-3: Class C2 EN 61000-6-4 EN 55022: Class A
Noise immunity	IEC/EN 61800-3: Second environment

0198441113556, V2.00, 09.2008

3.3 Mechanical data

3.3.1 Degree of protection

IP degree of protection

The product has the following IP degree of protection as per EN 60529.

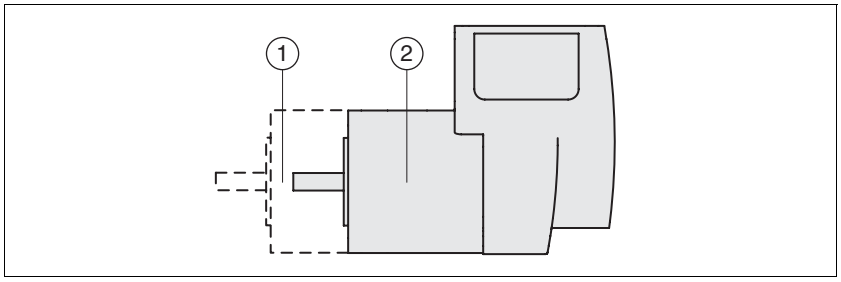

Figure 3.1 IP degree of protection

Item		Degree of protection
1	Shaft bushing	IP41
	Shaft bushing with GBX gear (accessory)	IP54
2	Housing, except shaft bushing	IP54

The total degree of protection is determined by the component with the lowest degree of protection.

Overview of IP degrees of protection

First digit		Second digit	
Protection against intrusion of objects		**Protection against intrusion of water**	
0	No protection	0	No protection
1	External objects >50 mm	1	Vertically falling dripping water
2	External objects >12 mm	2	Dripping water falling at an angle (75 ° ... 90 °)
3	External objects >2.5 mm	3	Spraying water
4	External objects >1 mm	4	Splashing water
5	Dust-protected	5	Water jets
6	Dust-tight	6	Heavy sea
		7	Immersion
		8	Submersion

Degree of protection if STO is used

You must ensure that conductive substances cannot get into the product (pollution degree 2). If you use the safety function and conductive substances get into the product, the safety function may become inoperative.

0198441113556, V2.00, 09.2008

3.3.2 Mounting position

Mounting position

The following mounting positions are defined and approved as per EN 60034-7:

- IM B5 drive shaft horizontal
- IM V1 drive shaft vertical, shaft end down
- IM V3 drive shaft vertical, shaft end up

0198441113556, V2.00, 09.2008

3.3.3 Dimensions

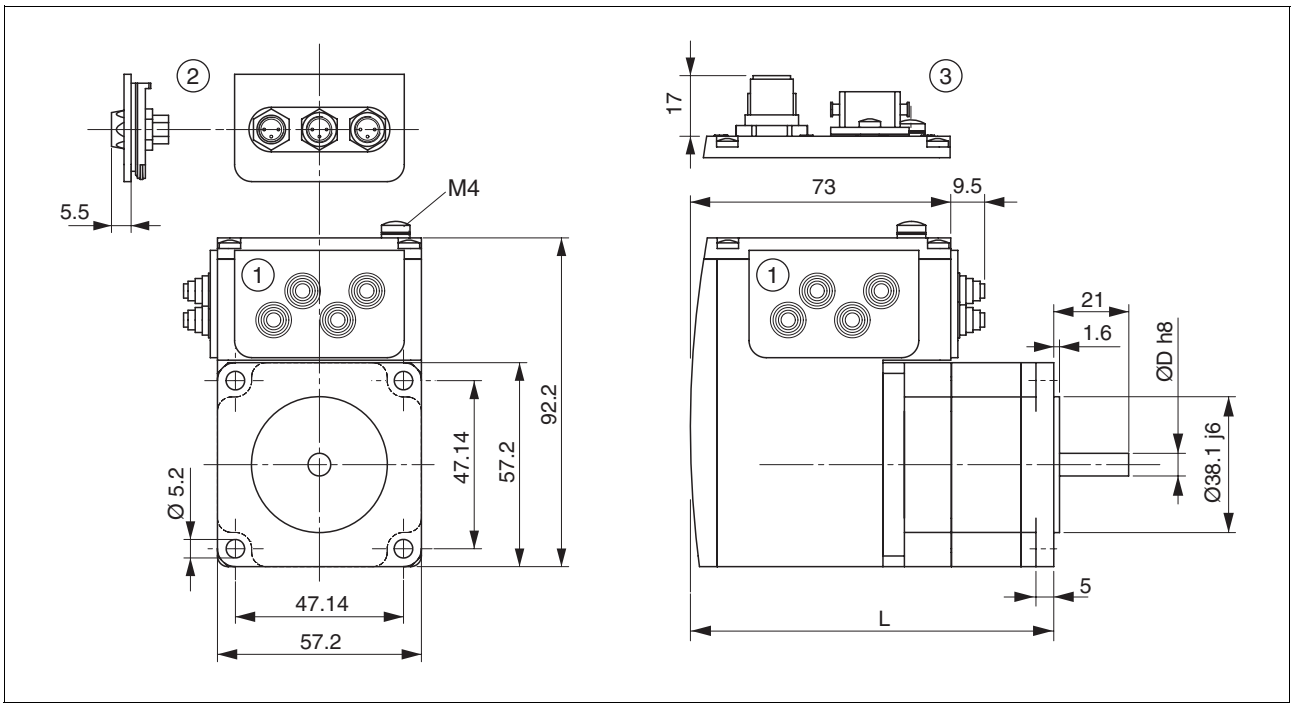

Figure 3.2 Dimensions

(1) Insert with cable entry (accessory)
(2) Insert kit (accessory)
(3) Industrial connector (option)

Total length L

ILS••571...		P•1A0
Length	[mm]	101.9

ILS••572...		2P•1A0
Length	[mm]	115.9

ILS••573...		3P•1A0
Length	[mm]	138.9

Shaft diameter D

ILS••571...		P•1A0
D	[mm]	6.35

ILS••572...		2P•1A0
D	[mm]	6.35

ILS••573...		3P•1A0
D	[mm]	8

0198441113556, V2.00, 09.2008

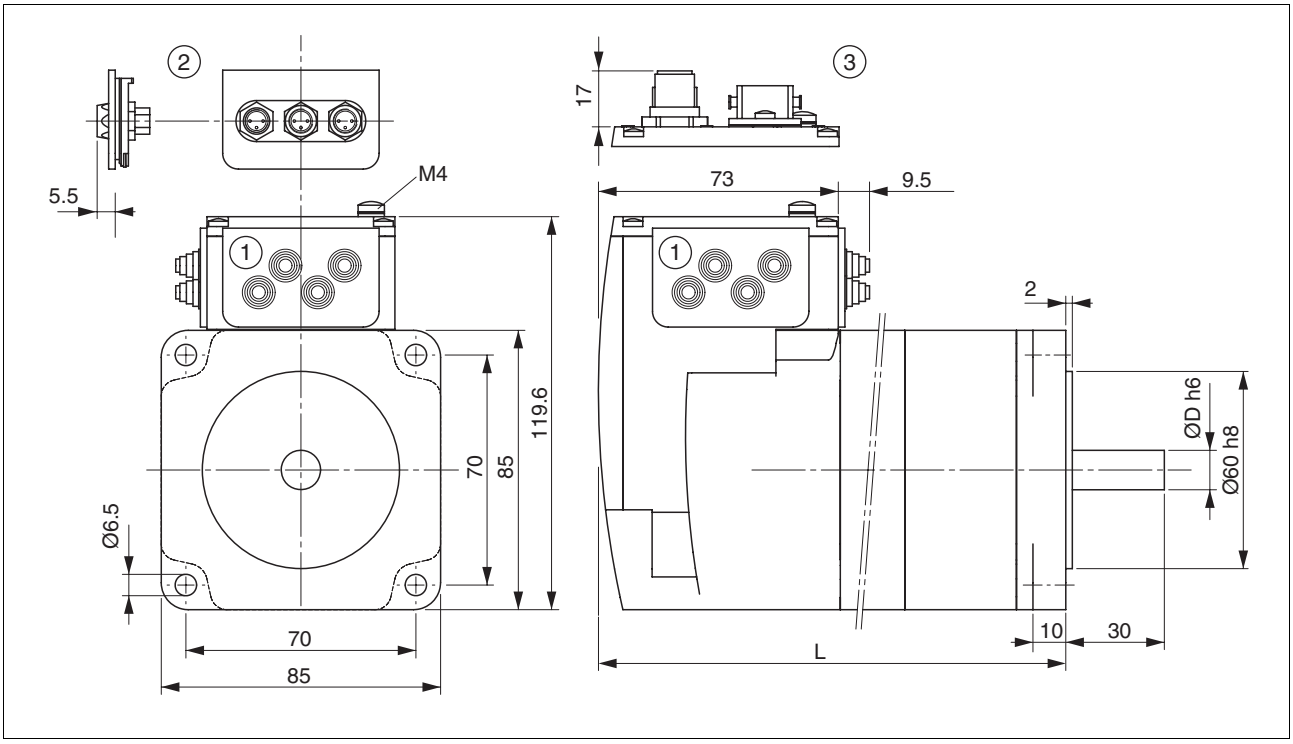

Figure 3.3 Dimensions

(1) Insert with cable entry (accessory)
(2) Insert kit (accessory)
(3) Industrial connector (option)

Total length L

ILS••851...		••1A0	••1F0
L	[mm]	140.6	187.3

ILS••852...		••1A0	••1F0
L	[mm]	170.6	217.3

ILS••853...		••1A0	••1F0
L	[mm]	200.6	247.3

Shaft diameter D

ILS••851...	mm	••1•0
D	[mm]	12

ILS••852...		••1•0
D	[mm]	12

ILS••853...		••1•0
D	[mm]	14

0198441113556, V2.00, 09.2008

3.4 Electrical Data

Overview of printed circuit board connectors

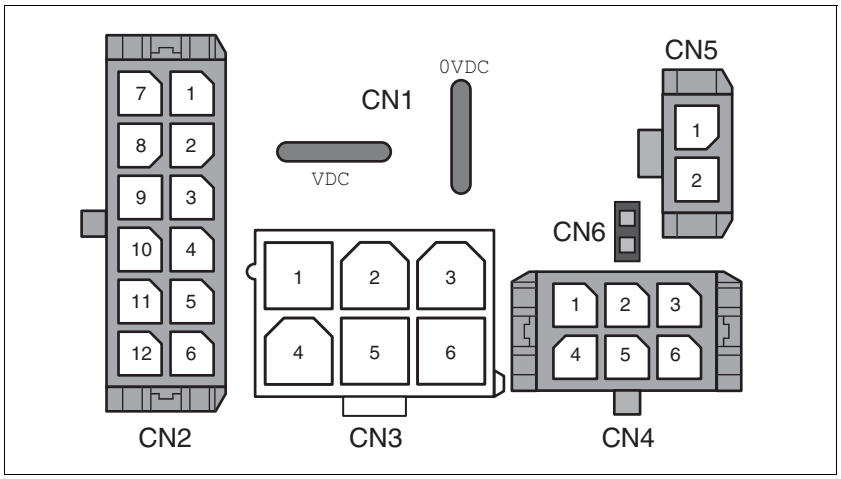

Figure 3.4 Overview of printed circuit board connectors

3.4.1 Supply Voltage VDC at CN1

		ILS1•57•	ILS1•851 ILS1•852	ILS1•853
Nominal voltage	[V_{dc}]	24 / 36	24 / 36	24 / 36
Limit values	[V_{dc}]	18 ... 40	18 ... 40	18 ... 40
Ripple at nominal voltage	[V_{pp}]	≤3.6	≤3.6	≤3.6
Max. current input [1)] Winding type P Winding type T	[A]	 3.5 -	 5 -	 5 6
Fuse to be connected upstream [2)]	[A]	≤16	≤16	≤16

1) The actual power requirement is often significantly lower, because the maximum possible motor torque is usually not required for operation of a system.
2) See chapter 5.1.1 "Supply voltage"

Inrush current current Charging current for capacitor C=1500 µF

0198441113556, V2.00, 09.2008

3.4.2 Multifunction interface at CN2

Signal inputs

The signal inputs are galvanically connected to 0VDC and not protected against reverse polarity.

Logic 0 (U_{low})	[V]	-3 ... +5
Logic 1 (U_{high})	[V]	+15 ... +30
Input current (typical at 24V)	[mA]	10
Debounce time IO0 ... IO3	[ms]	1 ... 1.5

External signal power supply +24VDC_2 for NO_FAULT_OUT, FUNCT1_OUT and FUNCT2_OUT

If the signal outputs NO_FAULT_OUT, FUNCT1_OUT and FUNCT2_OUT are used, an external signal supply at +24VDC_2 is required. The power supply unit must meet the requirements of IEC61131-2 (PELV standard power supply unit).

Voltage range	[V]	24 (-15 % / +20 %)
Input current without load	[mA]	≤100
Protection against reverse polarity		Yes

Signal outputs

The signal outputs NO_FAULT_OUT, FUNCT1_OUT and FUNCT2_OUT are galvanically isolated from the VDC supply voltage of the drive.

Voltage range	[V]	10 ... 30 [1)]
Max. switching current per output	[mA]	50
Suitable for inductive loads	[mH]	1000

1) Voltage value corresponding to the applied external signal supply

3.4.3 Commissioning at CN3

RS485 signals

The RS485 signals conform to the RS485 standard and are not galvanically isolated.

Transmission rate	[kBaud]	9.6 / 19.2 / 38.4
Transmission protocol		Manufacturer-specific protocol

0198441113556, V2.00, 09.2008

3.4.4 24V signals to CN4

Signal inputs

The signal inputs are galvanically connected to 0VDC and not protected against reverse polarity.

Logic 0 (U_{low})	[V]	-3 ... +5
Logic 1 (U_{high})	[V]	+15 ... +30
Input current (typical at 24V)	[mA]	10
Debounce time IO0 ... IO3	[ms]	1 to 1.5

Signal outputs

The signal outputs are galvanically connected to 0VDC and short-circuit protected.

Nominal voltage	[V]	24
Voltage range	[V]	23 ... 25
Maximum current (total)	[mA]	200
Maximum current per output	[mA]	100
Suitable for inductive loads	[mH]	1000

3.4.5 STO safety function at CN5 and CN6

The signal inputs are galvanically connected to 0VDC.

Logic 0 (U_{low})	[V]	-3 ... +4.5
Logic 1 (U_{high})	[V]	+15 ... +30
Input current $\overline{STO_A}$ ($\overline{PWRR_A}$) (typical at 24V)	[mA]	≤10
Input current $\overline{STO_B}$ ($\overline{PWRR_B}$) (typical at 24V)	[mA]	≤3
Debounce time	[ms]	1
Detection of signal difference between $\overline{STO_A}$ ($\overline{PWRR_A}$) and $\overline{STO_B}$ ($\overline{PWRR_B}$)	[s]	≥1
Response time (until shutdown of power stage)	[ms]	<50
Permitted test pulse width of upstream devices	[ms]	<1

0198441113556, V2.00, 09.2008

Data for maintenance plan and safety calculations

Use the following data of the STO safety function for your maintenance plan and the safety calculations:

Lifetime (IEC 61508)		20 years
SFF (IEC 61508) Safe Failure Fraction	[%]	66
HFT (IEC 61508) Hardware Fault Tolerance Type A subsystem		1
Safety integrity level IEC 61508 IEC 62061		 SIL2 SILCL2
PFH (IEC 61508) Probability of Dangerous Hardware Failure per Hour	[1/h]	$1.84*10^{-9}$
PL (ISO 13849-1) Performance Level		d (Category 3)
$MTTF_d$ (EN 13849-1) Mean Time to Dangerous Failure		4566 years
DC (EN 13849-1) Diagnostic Coverage	[%]	90

3.5 Conditions for UL 508C

If the product is used to comply with UL 508C, the following conditions must be met:

Ambient temperature during operation

Surrounding air temperature	[°C]	0 ... +50
Surrounding air temperature with current reduction of 2% per Kelvin	[°C]	50 ... 65

Pollution degree Use in an environment with pollution degree 2.

Power supply Use only power supply units that are approved for overvoltage category III.

Wiring Use only 60/75 °C copper conductors.

0198441113556, V2.00, 09.2008

4 Basics

4.1 Functional safety

Automation and safety engineering are two areas that were completely separated in the past but recently have become more and more integrated. Engineering and installation of complex automation solutions are greatly simplified by integrated safety functions.

Usually, the safety engineering requirements depend on the application. The level of the requirements results from the risk and the hazard potential arising from the specific application.

Working with IEC 61508

IEC 61508 standard

The standard IEC 61508 "Functional safety of electrical/electronic/programmable electronic safety-related systems" covers the safety-related function. It is not only one single component but the entire function chain (e.g. from the sensor through the logical processing unit to the actuator) that is considered as one single unit. This function chain must meet the requirements of the specific safety integrity level as a whole. Systems and components that can be used in various applications for safety tasks with comparable risk levels can be developed on this basis.

SIL, Safety Integrity Level

The standard IEC 61508 defines 4 safety integrity levels (SIL) for safety functions. SIL1 is the lowest level and SIL4 is the highest level. A hazard and risk analysis serves as a basis for determining the required safety integrity level. This is used to decide whether the relevant function chain is to be considered as a safety function and which hazard potential it must cover.

PFH, Probability of a dangerous hardware failure per hour

To maintain the safety function, the IEC 61508 standard requires various levels of measures for avoiding and controlling faults, depending on the required SIL. All components of a safety function must be subjected to a probability assessment to evaluate the effectiveness of the measures implemented for controlling faults. This assessment determines the PFH (probability of a dangerous failure per hour) for a safety system. This is the probability per hour that a safety system fails in a hazardous manner and the safety function cannot be correctly executed. Depending on the SIL, the PFH must not exceed certain values for the entire safety system. The individual PFH values of a function chain are added; the total PFH value must not exceed the maximum value specified in the standard.

SIL	PFH at high demand or continuous demand
4	$\geq 10^{-9}$ ... $<10^{-8}$
3	$\geq 10^{-8}$ ... $<10^{-7}$
2	$\geq 10^{-7}$ ... $<10^{-6}$
1	$\geq 10^{-6}$ ... $<10^{-5}$

0198441113556, V2.00, 09.2008

HFT and SFF

Depending on the SIL for the safety system, the IEC 61508 standard requires a specific hardware fault tolerance HFT in connection with a specific proportion of safe failures SFF (safe failure fraction). The hardware fault tolerance is the ability of a system to execute the required safety function in spite of the presence of one or more hardware faults. The SFF of a system is defined as the ratio of the rate of safe failures to the total failure rate of the system. According to IEC 61508, the maximum achievable SIL of a system is partly determined by the hardware fault tolerance HFT and the safe failure fraction SFF of the system.

SFF	**HFT type A subsystem**			**HFT type B subsystem**		
	0	**1**	**2**	**0**	**1**	**2**
< 60%	SIL1	SIL2	SIL3	---	SIL1	SIL2
60% ... <90%	SIL2	SIL3	SIL4	SIL1	SIL2	SIL3
90% ... < 99%	SIL3	SIL4	SIL4	SIL2	SIL3	SIL4
≥99%	SIL3	SIL4	SIL4	SIL3	SIL4	SIL4

Fault avoidance measures

Systematic errors in the specifications, in the hardware and the software, usage faults and maintenance faults of the safety system must be avoided to the maximum degree possible. To meet these requirements, IEC 61508 specifies a number of measures for fault avoidance that must be implemented depending on the required SIL. These measures for fault avoidance must cover the entire life cycle of the safety system, i.e. from design to decommissioning of the system.

0198441113556, V2.00, 09.2008

5 Engineering

This chapter contains information on the application of the product that is vital in the design phase.

5.1 External power supply units

⚠ DANGER

ELECTRIC SHOCK CAUSED BY INCORRECT POWER SUPPLY UNIT

The VDC and +24VDC supply voltages are connected with many exposed signal connections in the drive system.

- Use a power supply unit that meets the PELV (Protective Extra Low Voltage) requirements.
- Connect the negative output of the power supply unit to PE (ground).

Failure to follow these instructions will result in death or serious injury.

5.1.1 Supply voltage

General

The power supply unit must be rated for the power requirements of the drive. The input current can be found in the technical data.

The actual power requirements are often significantly lower because the maximum possible motor torque is usually not required for normal operation of a system.

When designing the system, note that the input current of the drive is higher during the motor acceleration phase than during constant movement.

Protection against reverse polarity

In the case of reverse polarity, the supply voltage is short-circuited. The drive is continuous short circuit-proof up to a short-circuit current of a maximum of 15 A. If the power is supplied by a transformer power supply unit, several hundred amperes may flow for a short period of time in the event of reverse polarity; the drive is rated for this and will not be damaged.

Fuse: a circuit-breaker (16 A, trip characteristic B) or a blade fuse (FKS, max. 15 A) or a fuse (5 mm x 20 mm, 10 A slow-blow).

0198441113556, V2.00, 09.2008

Regeneration condition

Note the following for drives with large external mass moments of inertia or for highly dynamic applications:

Motors return regeneration energy during deceleration. The DC bus can store a limited amount of energy in the capacitors. Connecting additional capacitors to the DC bus increases the amount of energy that can be stored.

If the capacity of the capacitors is exceeded, the excess energy must be discharged via internal or external braking resistors. If the energy is not discharged, an overvoltage monitor will shut off the power stage.

Overvoltages can be limited by adding a braking resistor with a corresponding braking resistor controller. This converts the regenerated energy to heat energy during deceleration.

Braking resistor controllers can be found in chapter 11 "Accessories and spare parts". See the product manual for a description of the braking resistor controller.

⚠ CAUTION

LOSS OF CONTROL DUE TO REGENERATION CONDITION

Regeneration conditions resulting from braking or external driving forces may increase the VDC supply voltage to an unexpected level. Components not rated for this voltage may be destroyed or cause misoperation.

- Verify that all VDC consumers are rated for the voltage occurring during regeneration conditions (for example limit switches).
- Use only power supply units that will not be damaged by regeneration conditions.
- Use a braking resistor controller, if necessary.

Failure to follow these instructions can result in injury or equipment damage.

24V signal power supply

A constant 24V signal power supply is available for the sensor system.

It must not be connected in parallel with the 24V signal power supply of a different drive.

External signal power supply for NO_FAULT_OUT, FUNCT1_OUT, FUNCT2_OUT

The outputs NO_FAULT_OUT, FUNCT1_OUT and FUNCT2_OUT and the supply voltage VDC of the drive are galvanically isolated. An external signal supply +24VDC_2 is required to maintain the galvanic isolation.

0198441113556, V2.00, 09.2008

5.2 Ground design

The ground connections of all interfaces are galvanically connected, including the ground for the VDC supply voltage.

The outputs NO_FAULT_OUT, FUNCT1_OUT and FUNCT2_OUT are exceptions to this.

The following points must be considered when you wire the drives in a system:

- The voltage drop in the VDC power supply lines must be kept as low as possible (less than 1 V). At higher ground potential differences between different drives, the communication / control signals may be affected.
- If the distance between the system components is greater, it is recommended to use decentralized power supply units close to the individual drives to supply the VDC voltage. However, the ground connections of the individual power supply units must be connected with the largest possible conductor cross section.
- The internal 24V signal power supply must not be connected in parallel with the internal 24V signal power supply of a different drive.
- If the master controller (e.g. PLC, IPC etc.) does not have galvanically isolated outputs for the drives, you must verify that the current of the VDC supply voltage has no path back to the power supply unit via the master controller. Therefore, the master controller ground may be connected to the VDC supply voltage ground at a single point only. This is usually the case in the control cabinet. The ground contacts of the various signal connectors in the drive are therefore not connected; there is already a connection via the VDC supply voltage ground.
- If the controller has a galvanically isolated interface for communication with the drives, the ground of this interface must be connected to the signal ground of the first drive. This ground may be connected to a single drive only to avoid ground loops. This also applies to a galvanically isolated CAN connection.

Equipotential bonding conductors

Potential differences can result in excessive currents on the cable shields. Use equipotential bonding conductors to reduce currents on the cable shields.

The equipotential bonding conductor must be rated for the maximum current flowing. Practical experience has shown that the following conductor cross sections can be used:

- 16 mm^2 (AWG 4) for equipotential bonding conductors up to a length of 200 m
- 20 mm^2 (AWG 4) for equipotential bonding conductors with a length of more than 200 m

0198441113556, V2.00, 09.2008

5.3 Safety function STO ("Safe Torque Off")

See page 35 for information on using the IEC 61508 standard..

5.3.1 Definitions

Safety function STO (IEC 61800-5-2)

The safety function STO ("Safe Torque Off", "Safe Torque Off") shuts off the motor torque safely. It is not necessary to interrupt the supply voltage. There is no monitoring for standstill.

"Power Removal"

The STO safety function ("Safe Torque Off") is also known as "Power Removal".

Category 0 stop (EN 60204-1)

Stopping by immediate removal of power to the machine actuators (i.e. an uncontrolled stop).

Category 1 stop (EN 60204-1)

Controlled stop with power available to the machine actuators to achieve the stop. Power is not interrupted until the stop is achieved.

5.3.2 Function

The STO safety function integrated into the product can be used to implement an "EMERGENCY STOP" (EN 60204-1) for category 0 stops. With an additional, approved EMERGENCY STOP module, it is also possible to implement category 1 stops.

Function principle

The STO safety function is triggered via 2 redundant inputs. The circuits of the two inputs must be separate so that there are always two channels.

The switching process must be simultaneous for both inputs (skew <1s). The power stage is disabled and an error message is generated. The motor can no longer generate torque and coasts down without braking. A restart is possible after resetting the error message with a "Fault Reset".

The power stage is disabled and an error message is generated if only one of the two inputs is switched off or if the skew is too great. This error message can only be reset by switching off the product.

0198441113556, V2.00, 09.2008

5.3.3 Requirements for using the safety function

⚠ WARNING

LOSS OF SAFETY FUNCTION

Incorrect usage may cause a hazard due to the loss of the safety function.

- Observe the requirements for using the safety function.

Failure to follow these instructions can result in death or serious injury.

Category 0 stop

During a category 0 stop, the motor coasts down in an uncontrolled way. If access to the machine coasting down involves a hazard (results of the hazard and risk analysis), you must take appropriate measures.

Category 1 stop

A controlled stop must be triggered with a category 1 stop. The controlled stop is not monitored by the drive system; in the case of a power outage or an error, the stop may not be performed correctly. Final shutoff of the motor is achieved by switching off the two inputs of the STO safety function. The shutoff is usually controlled by a standard EMERGENCY STOP module with a safe time delay.

Behavior of holding brake

Triggering the STO safety function means that the delay time for motors with holding brake is not effective. The motor cannot generate holding torque to bridge the time to application of the holding brake. Especially in the case of vertical axes it is important to verify whether additional measures are required to avoid lowering of the load.

Vertical axes, external forces

If external forces act on the motor (vertical axis) and an unwanted movement, for example caused by gravity, could cause a hazard, the motor must not be operated without additional measures for fall protection, corresponding to the required safety.

Unintended restart

To avoid an unexpected restart after restoration of power (e.g. after power outage), the parameter `DataSet.AutoEnabl` must be set to "off" . Note that a master controller must not trigger an unintended restart.

Degree of protection if STO is used

You must ensure that conductive substances cannot get into the product (pollution degree 2). If you use the safety function and conductive substances get into the product, the safety function may become inoperative.

0198441113556, V2.00, 09.2008

Protected cable installation

If short circuits or cross circuits can be expected in connection with the two signals of the STO safety function and if they are not detected by upstream devices, protected cable installation is required.

In the case of an unprotected cable installation, the two signals of the STO safety function may be connected to external voltage if a cable is damaged. If the two signals are connected to external voltage, the STO safety function is no longer operative.

Protected cable installation possibilities:

- Use separate cables for two signals. Any additional wires in these cables may only carry voltages according to PELV.
- Use a shielded cable. The grounded shield is designed to dissipate the external voltage in the case of damages and to trip the fuse in this way.
- Use a separately grounded shield. If there are other wires in the cable, the two signals must be isolated from these wires by a grounded, separate shield.

Data for maintenance plan and safety calculations

Use the following data of the STO safety function for your maintenance plan and the safety calculations:

Lifetime (IEC 61508)		20 years
SFF (IEC 61508) Safe Failure Fraction	[%]	66
HFT (IEC 61508) Hardware Fault Tolerance Type A subsystem		1
Safety integrity level IEC 61508 IEC 62061		 SIL2 SILCL2
PFH (IEC 61508) Probability of Dangerous Hardware Failure per Hour	[1/h]	$1.84*10^{-9}$
PL (ISO 13849-1) Performance Level		d (Category 3)
$MTTF_d$ (EN 13849-1) Mean Time to Dangerous Failure		4566 years
DC (EN 13849-1) Diagnostic Coverage	[%]	90

Hazard and risk analysis

As a system manufacturer you must conduct a hazard and risk analysis of the entire system. The results must be taken into account in the application of the STO safety function.

The type of circuit resulting from the analysis may differ from the following application examples. Additional safety components may be required. The results of the hazard and risk analysis always have priority.

0198441113556, V2.00, 09.2008

5.3.4 Application examples STO

Example of category 0 stop Application without EMERGENCY STOP module, category 0 stop.

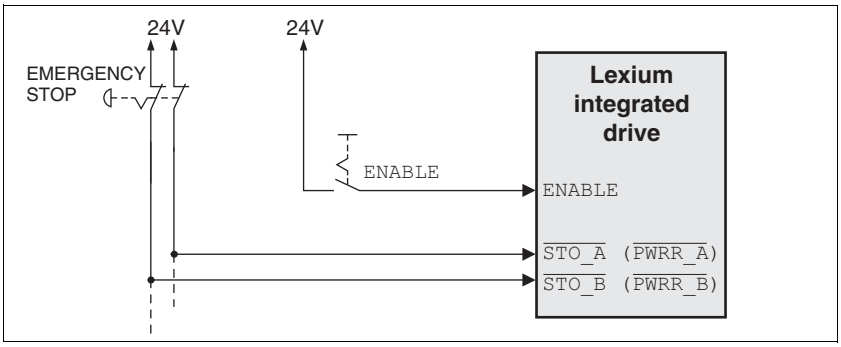

Figure 5.1 Example of category 0 stop

Please note:

- When the EMERGENCY STOP switch is tripped, this initiates a category 0 stop

Example of category 1 stop Application with EMERGENCY STOP module, category 1 stop.

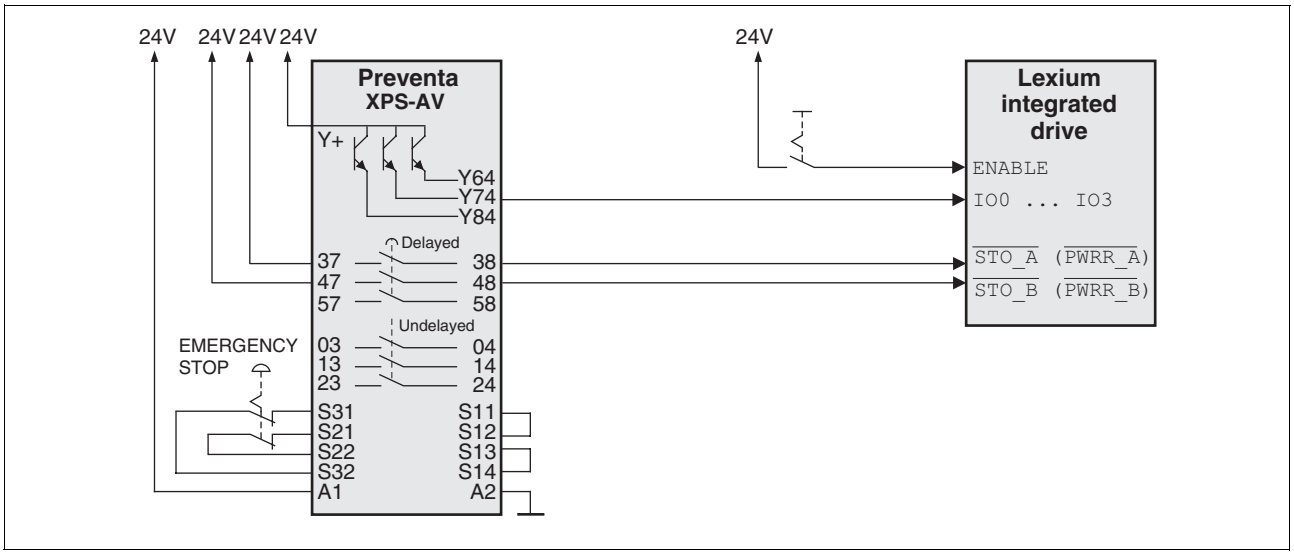

Figure 5.2 Example of category 1 stop

Please note:

- One of the programmable inputs `IO0` ... `IO3` must be configured with the function of the "STOP switch" so that a controlled stop can be triggered; see 6.3.8 "24V signal interface connection".
- A controlled stop is triggered via one of the programmable inputs `IO0` ... `IO3` without a delay.
- The inputs $\overline{\text{STO_A}}$ ($\overline{\text{PWRR_A}}$) and $\overline{\text{STO_B}}$ ($\overline{\text{PWRR_B}}$) must be switched off with a time delay. The delay is set at the EMERGENCY STOP safety module. If the motor has not yet stopped when the delay time has elapsed, it coasts down in an uncontrolled way (uncontrolled stop).
- The specified minimum current of the relays must be observed if the relay outputs of the EMERGENCY STOP module are used.

0198441113556, V2.00, 09.2008

5.4 Monitoring functions

The monitoring functions in the product can help to guard the system and reduce the risks involved in a system misoperation. These monitoring functions may not be used to protect persons.

The following monitoring functions are available:

Monitoring	Task
Stall detection	Checks the motor movement using the index pulse
Data link	Error response if the link becomes inoperative
Limit switch signals	Monitors for permissible range of travel
STOP switch signal	Stops motor with "Quick Stop"
Overvoltage and undervoltage	Monitors for overvoltage and undervoltage of the supply voltage
Motor overload	Monitors for excessively high current in the motor phases
Overtemperature	Monitors the device for overtemperature

0198441113556, V2.00, 09.2008

6 Installation

⚠ WARNING

LOSS OF CONTROL

- The designer of any control scheme must consider the potential failure modes of control paths and, for certain critical functions, provide a means to achieve a safe state during and after a path failure. Examples of critical control functions are EMERGENCY STOP, overtravel stop, power outage and restart.
- Separate or redundant control paths must be provided for critical functions.
- System control paths may include communication links. Consideration must be given to the implication of unanticipated transmission delays or failures of the link.
- Observe the accident prevention regulations and local safety guidelines. [1)]
- Each implementation of the product must be individually and thoroughly tested for proper operation before being placed into service.

Failure to follow these instructions can result in death or serious injury.

1) For USA: Additional information, refer to NEMA ICS 1.1 (latest edition), Safety Guidelines for the Application, Installation, and Maintenance of Solid State Control and to NEMA ICS 7.1 (latest edition), Safety Standards for Construction and Guide for Selection, Installation for Construction and Operation of Adjustable-Speed Drive Systems.

⚠ CAUTION

RISK OF INJURY WHEN REMOVING CIRCUIT BOARD PLUGS

- When removing them note that the connectors must be unlocked.
  - Supply voltage VDC:
    Unlock by pulling at the plug housing
  - Miscellaneous:
    Unlock by pressing the locking lever
- Always hold the plug to remove it (not the cable).

Failure to follow these instructions can result in injury or equipment damage.

The chapter Engineering contains basic information that you should know before starting the installation.

0198441113556, V2.00, 09.2008

6.1 Electromagnetic compatibility, EMC

⚠ WARNING

SIGNAL AND DEVICE INTERFERENCE

Signal interference can cause unexpected responses of device.

- Install the wiring in accordance with the EMC requirements.
- Verify compliance with the EMC requirements.

Failure to follow these instructions can result in death, serious injury or equipment damage.

This drive system meets the EMC requirements according to the standard IEC 61800-3, if the described measures are implemented during installation. If it is operated outside this scope, note the following:

⚠ WARNING

HIGH-FREQUENCY INTERFERENCE

In a domestic environment this product may cause high-frequency interference that may require action to suppress interference.

EMC measures	Effect
Keep cables as short as possible. Do not install unnecessary cable loops, use short cables from the star point in the control cabinet to the external ground connection.	Reduces capacitive and inductive interference.
Ground the product via the motor flange or with a ground strap to the ground connection at the cover of the connector housing.	Reduces emissions, increases immunity.
Ground shields of digital signal wires at both ends by connecting them to a large surface or via conductive connector housings.	Reduces interference affecting the signal wires, reduces emissions
Connect large surface areas of cable shields, use cable clamps and ground straps	Reduces emissions.

The following cables must be shielded:

- Multifunction interface
- STO safety function,
  see the requirements in chapter 5.3.3 "Requirements for using the safety function".

The following cables do not need to be shielded:

- Supply voltage VDC
- 24 V signal interface

0198441113556, V2.00, 09.2008

Equipotential bonding conductors

Potential differences can result in excessive currents on the cable shields. Use equipotential bonding conductors to reduce currents on the cable shields.

The equipotential bonding conductor must be rated for the maximum current flowing. Practical experience has shown that the following conductor cross sections can be used:

- 16 mm^2 (AWG 4) for equipotential bonding conductors up to a length of 200 m
- 20 mm^2 (AWG 4) for equipotential bonding conductors with a length of more than 200 m

6.2 Mechanical installation

⚠ CAUTION

HOT SURFACES

Depending on the operation, the surface may heat up to more than 100°C (212°F).

- Do not allow contact with the hot surfaces.
- Do not allow flammable or heat-sensitive parts in the immediate vicinity.
- Consider the measures for heat dissipation described.
- Check the temperature during test runs.

Failure to follow these instructions can result in injury or equipment damage.

⚠ CAUTION

MOTOR DAMAGE AND LOSS OF CONTROL

Shock or strong pressure applied to the motor shaft may destroy the motor.

- Protect the motor shaft during handling and transportation.
- Avoid shocks to the motor shaft during mounting.
- Do not press parts onto the shaft. Mount parts to the shaft by glueing, clamping, shrink-fitting or screwing.

Failure to follow these instructions can result in injury or equipment damage.

0198441113556, V2.00, 09.2008

⚠ WARNING

MOTOR WITHOUT BRAKING EFFECT

If power outage and faults cause the power stage to be switched off, the motor is no longer stopped by the brake and may increase its speed even more until it reaches a mechanical stop.

- Verify the mechanical situation.
- If necessary, use a cushioned mechanical stop or a suitable brake.

Failure to follow these instructions can result in death, serious injury or equipment damage.

⚠ WARNING

LOSS OF BRAKING FORCE DUE TO WEAR OR HIGH TEMPERATURE

Applying the holding brake while the motor is running will cause excessive wear and loss of the braking force. Heat decreases the braking force.

- Do not use the brake as a service brake.
- Note that "EMERGENCY STOPS" may also cause wear
- At operating temperatures of more than 80°C (176°F), do not exceed a maximum of 50% of the specified holding torque when using the brake.

Failure to follow these instructions can result in death, serious injury or equipment damage.

⚠ WARNING

LOAD FALLS DURING SWITCHING ON

When the brake of stepping motor drives is released and external forces are applied (vertical axes), the load may fall if the friction is low.

- In such applications, limit the load to a maximum of 25% of the static holding torque.

Failure to follow these instructions can result in death, serious injury or equipment damage.

To install a drive in locations difficult to access, it may be useful to carry out the electrical installation first and then install the fully wired drive.

0198441113556, V2.00, 09.2008

Heat dissipation

The motor may become very hot, e.g. in the case of incorrect arrangement of multiple motor. The surface temperature of the motor must not exceed 110 °C during continuous operation.

- Verify that the maximum temperature is not exceeded.
- Verify that there is sufficient heat dissipation, e.g. by means of good ventilation or heat dissipation via the motor flange.

Mounting

The motor is designed to be mounted using four M5 screws. The motor flange must be mounted on a flat surface to avoid mechanical tension from being transmitted to the housing.

Painted surfaces have an insulating effect. During mounting verify that the motor flange is mounted in such a way as to allow for good conductivity (electrical and thermal).

Mounting distances

No minimum clearances are required for installation. However, note that the motor can become very hot.

Observe the bending radii of the cables used.

Ambient conditions

Observe the permissible ambient conditions.

0198441113556, V2.00, 09.2008

6.3 Electrical installation

⚠ WARNING

UNEXPECTED BEHAVIOR CAUSED BY FOREIGN OBJECTS

Foreign objects, deposits or humidity can cause unexpected behavior.

- Keep foreign objects from getting into the product.
- Do not remove the cover of the electronics housing. Only remove the connector housing cover.
- Verify correct seat of seals and cable entries.

Failure to follow these instructions can result in death, serious injury or equipment damage.

⚠ WARNING

LOSS OF SAFETY FUNCTION CAUSED BY FOREIGN OBJECTS

Conductive foreign objects, dust or liquids may cause the STO safety function to become inoperative.

- You may not use the STO safety function unless you have protected the system against contamination by conductive substances.

Failure to follow these instructions can result in death or serious injury.

⚠ CAUTION

DAMAGE TO SYSTEM COMPONENTS AND LOSS OF CONTROL

Interruptions of the negative connection of the controller supply voltage can cause excessively high voltages at the signal connections.

- Do not interrupt the negative connection between the power supply unit and load with a fuse or switch.
- Verify correct connection before switching on.
- Do not connect the controller supply voltage or change its wiring while the is supply voltage present.

Failure to follow these instructions can result in injury or equipment damage.

The chapter Engineering contains basic information that you should know before starting the installation.

0198441113556, V2.00, 09.2008

6.3.1 Wiring examples

The following figure shows a wiring example with galvanic isolation. The galvanically isolated signal outputs NO_FAULT_OUT, FUNCT1_OUT and FUNCT2_OUT are supplied via the master controller. The limit switches and the keys for jog mode are supplied via the internal 24V signal power supply.

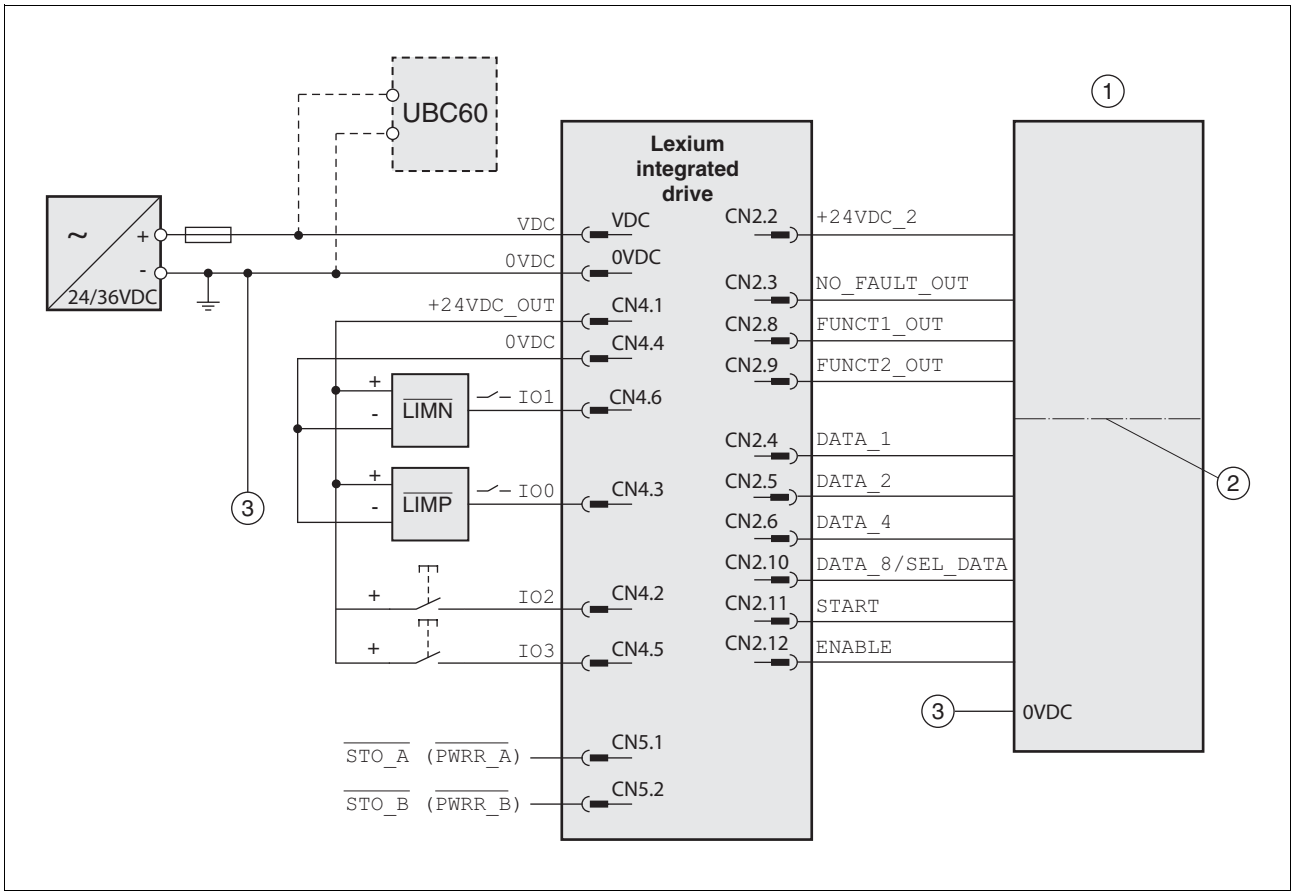

Figure 6.1 Wiring example

(1) PLC
(2) Galvanic isolation (optional)
(3) The two reference potentials must be bridged.

The UBC60 braking resistor controller is available as an accessory, see chapter 11 "Accessories and spare parts".

0198441113556, V2.00, 09.2008

6.3.2 Overview of all connections

Overview of printed circuit board connectors

The following figure shows the pin assignment of the interfaces with the connector housing cover open.

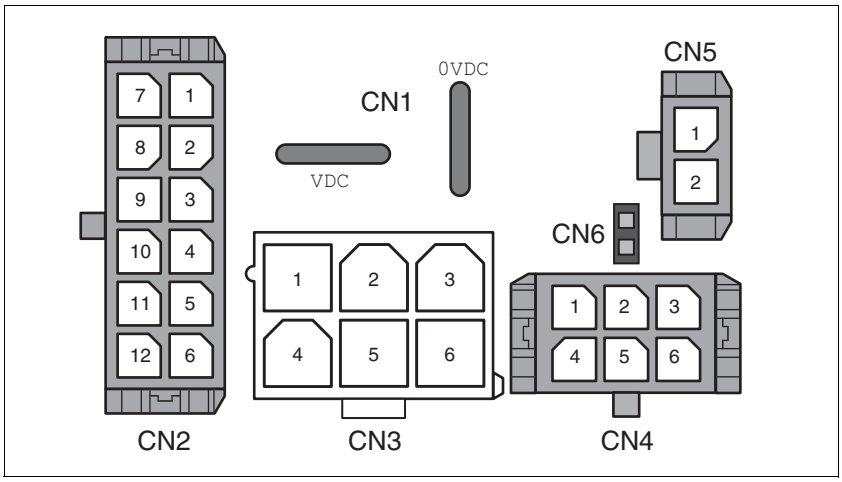

Figure 6.2 Overview of all connections

Connection	Assignment
CN1	Supply voltage VDC
CN2	Multifunction interface
CN3	RS485 interface
CN4	24 V signal interface
CN5	Interface for STO safety function
CN6	Jumper for disabling STO safety function

The drive can be connected via cable entries or industrial connectors.

For connection via cable entries see page 53.
For connection via industrial connectors see page 56.

0198441113556, V2.00, 09.2008

6.3.3 Connection via cable entry

The cable specifications and pin assignments can be found in the chapters that describe the connections.

Preparing and fastening cables

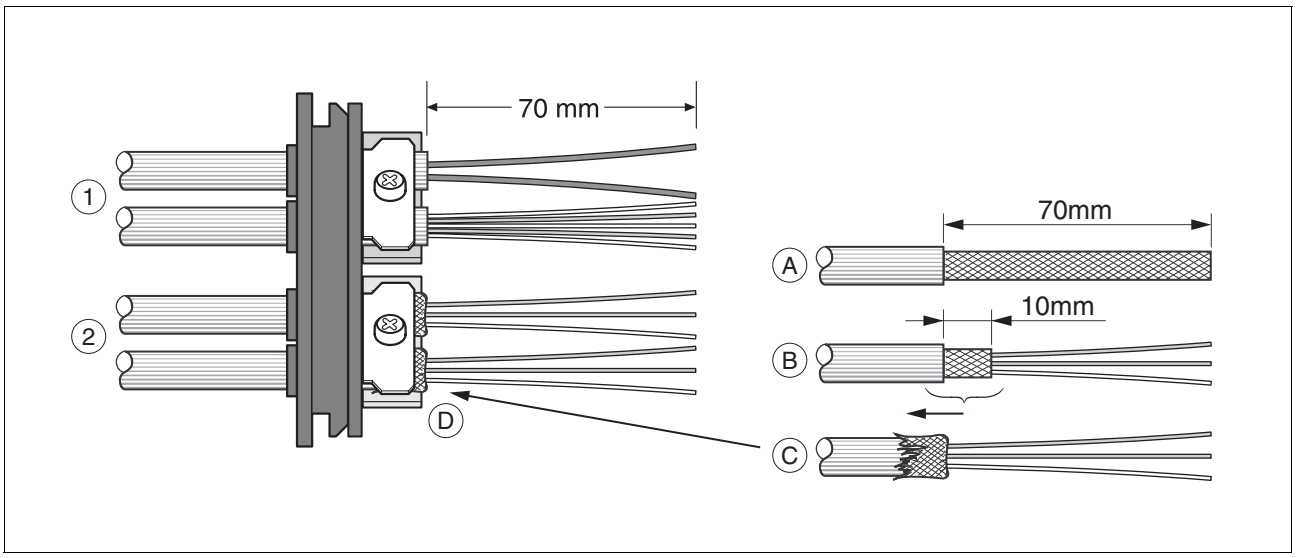

Figure 6.3 Fastening the cable in the cable entry

(1) Unshielded cable
(2) Shielded cable

- ▶ Trim the cable bushings to fit the cable.

  NOTE: The specified degree of protection IP54 can only be achieved with properly trimmed cable bushings.
- ▶ (A) Strip the jacket of all cables; length 70 mm.
- ▶ (B) Shorten the shield to a rest of 10 mm.
- ▶ (C) Slide the shield braiding back over the cable jacket.
- ▶ (D) Loosen the strain relief.
- ▶ Push the cables though the strain relief.
- ▶ Glue EMC shielding foil around the shield.
- ▶ Pull the cable back to the strain relief.
- ▶ Fasten the strain relief.

Mounting connectors

The table below lists the parts and data required for assembly. Connector housings and crimp contacts are included in the accessories kit. See also chapter 11 "Accessories and spare parts".

Only use the special tool listed in the Accessories chapter to release single crimp contacts from the connector housing.

0198441113556, V2.00, 09.2008

Connection	Conductor cross section of the crimp contact [mm²]	Stripping length [mm]	Manufacturer's crimp contact no.	Crimping tool	Connector manufacturer	Connector type
CN1	0.75 ... 1.5 (AWG 18 ... 16) 2.5 ... 4.0 (AWG 12)	5 ... 65 ... 6	160773-6 341001-6	654174-1	Tyco Electronics	Positive Lock 1-926 522-1
CN2	0.14 ... 0.6 (AWG 24 ... 20)	2.5 ... 3.0	43030-0007	69008-0982	Molex	Micro-Fit 3.0 43025-1200
CN3	0.25 ... 1.0 (AWG 24 ... 18)	3.0 ... 3.5	39-00-0060	69008-0724	Molex	Mini-Fit Jr. 39-01-2065
CN4	0.14 ... 0.6 (AWG 24 ... 20)	2.5 ... 3.0	43030-0007	69008-0982	Molex	Micro-Fit 3.0 43025-0600
CN5	0.14 ... 0.6 (AWG 24 ... 20)	2.5 ... 3.0	43030-0007	69008-0982	Molex	Micro-Fit 3.0 43645-0200

Prepare the cable for connection as follows:

- ▶ Strip the ends of the cable.
- ▶ Attach cable lugs and crimp contacts. Verify that you have the correct crimp contacts and the matching crimping tool.
- ▶ Slide the cable lugs and crimp contacts straight into the connector until they snap in place.

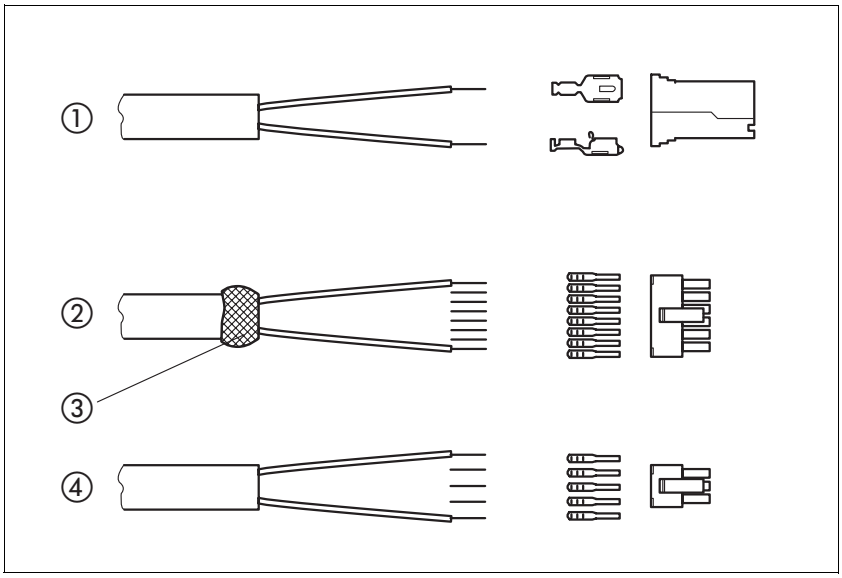

Figure 6.4 Connectors, cable lugs and crimp contacts

(1) Supply voltage VDC
(2) Multifunction interface
(3) Shield wire with EMC shield foil
(4) 24 V signal interface

0198441113556, V2.00, 09.2008

Mounting the cable entry

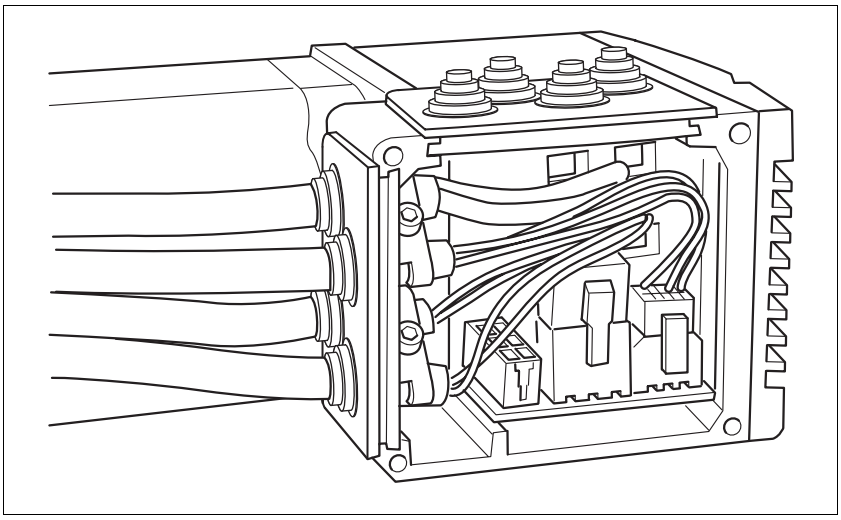

Figure 6.5 Inserting the cable entries

▶ Unscrew the connector housing cover.

NOTE: Shipping locks made of cardboard must not be used for operating the drive. Replace all shipping locks by cable entries or signal inserts.

▶ First adjust the parameter switches as these are difficult to access once the cables are connected.

For a description of the parameter switches, see the chapters describing the connections.

▶ Connect the plug of the assembled cable to the matching socket. The plugs cannot be turned out of position and must click into place when being plugged in.

Only pull the connector housing (not the cable).

▶ Plug the cable entry in one of the two cutouts provided. The side to be used for the cable entry depends on the space available in your system.

NOTE: The pointed corners of the cable entry must point in the direction of the connector housing cover. Degree of protection IP54 is not reached if the cable entry is mounted the other way round.

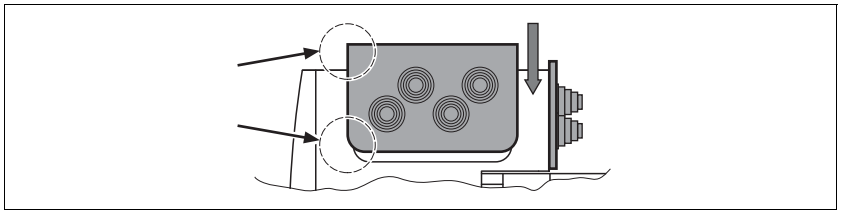

▶ Close the cutout that is not used with a sealing insert for cutouts.

▶ Finally, screw the connector housing cover back into place.

If screws are lost use M3x12 only.

0198441113556, V2.00, 09.2008

6.3.4 Connection with industrial connectors

Interface	Connector used
24V signal inputs and outputs	Circular connector M8, 3 poles
Safety function STO "Safe Torque Off" (IEC/EN 61800-5-2)	Circular connector M8, 4 poles

Because the requirements are different depending on the system configuration, pre-assembled cables specially designed for Ethernet fieldbus connections can be procured from various suppliers.

Information on pre-assembled cables, connector kits and recommended suppliers can be found in chapter 11 "Accessories and spare parts".

6.3.5 Connection of VDC supply voltage

⚠ DANGER

ELECTRIC SHOCK CAUSED BY INCORRECT POWER SUPPLY UNIT

The VDC and +24VDC supply voltages are connected with many exposed signal connections in the drive system.

- Use a power supply unit that meets the PELV (Protective Extra Low Voltage) requirements.
- Connect the negative output of the power supply unit to PE (ground).

Failure to follow these instructions will result in death or serious injury.

CAUTION

DAMAGE TO CONTACTS

The connection for the controller supply voltage at the product does not have an inrush current limitation. If the voltage is switched on by means of switching of contacts, damage to the contacts or contact welding may result.

- Use a power supply unit that limits the peak value of the output current to a value permissible for the contact.
- Switch the power input of the power supply unit instead of the output voltage.

Failure to follow these instructions can result in equipment damage.

0198441113556, V2.00, 09.2008

⚠ CAUTION

DAMAGE TO SYSTEM COMPONENTS AND LOSS OF CONTROL

Interruptions of the negative connection of the controller supply voltage can cause excessively high voltages at the signal connections.

- Do not interrupt the negative connection between the power supply unit and load with a fuse or switch.
- Verify correct connection before switching on.
- Do not connect the controller supply voltage or change its wiring while the is supply voltage present.

Failure to follow these instructions can result in injury or equipment damage.

Cable specifications and terminal

Two different crimp contacts are available for different conductor cross sections, see chapter 6.3.3 "Connection via cable entry".

Minimum conductor cross section	[mm^2]	0.75 (AWG 18)
Maximum connection cross section	[mm^2]	4.0 (AWG 12)
Stripping length	[mm]	5 ... 65 ... 6

Crimp contact 1607736-6	[mm^2]	
Minimum connection cross section		0.75 (AWG 18)
Maximum connection cross section		1.5 (AWG 16)
Crimp contact 341001-6	[mm^2]	
Minimum connection cross section		2.5 (AWG 12)
Maximum connection cross section		4.0 (AWG 12)

Unshielded cables may be used for the VDC supply voltage. Twisted pair is not required.

▶ Use pre-assembled cables to reduce the risk of wiring errors.

▶ Verify that wiring, cables and connected interfaces meet the PELV requirements.

Connecting the cables

▶ Note the specified technical data.

▶ Note the information provided in chapters 5.1 "External power supply units" and 5.2 "Ground design".

▶ Install fuses for the power supply cable accordance with the selected conductor cross section / wire gauge (note the inrush currents).

0198441113556, V2.00, 09.2008

Pin assignment printed circuit board connector

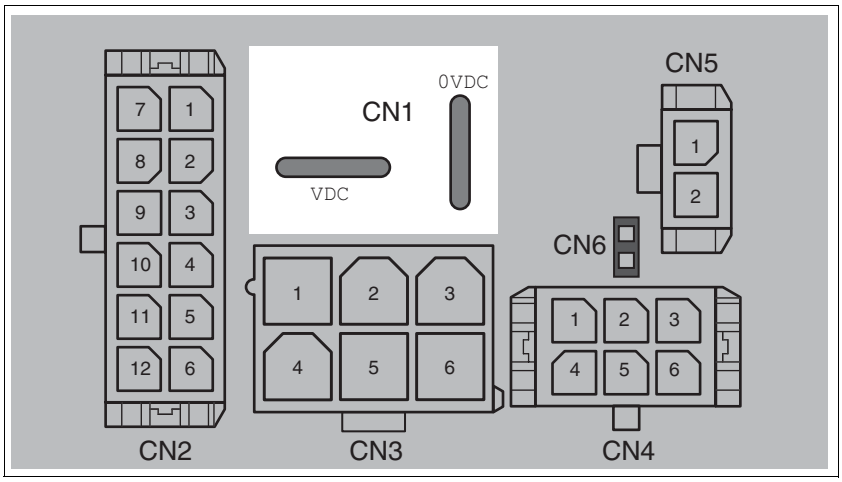

Figure 6.6 Pin assignment supply voltage

Signal	Meaning	Number [1)]
VDC	Supply voltage	1
0VDC	Reference potential to VDC	2

1) Information relates to pre-assembled cables

You can crimp together two wires to supply multiple drives via one DC bus. Two different crimp contacts are available for different conductor cross sections, see chapter 6.3.3 "Connection via cable entry".

0198441113556, V2.00, 09.2008

6.3.6 Connection of multifunction interface

External signal power supply for NO_FAULT_OUT, FUNCT1_OUT, FUNCT2_OUT

The outputs NO_FAULT_OUT, FUNCT1_OUT and FUNCT2_OUT and the supply voltage VDC of the drive are galvanically isolated. An external signal supply +24VDC_2 is required to maintain the galvanic isolation.

⚠ DANGER

ELECTRIC SHOCK CAUSED BY INCORRECT POWER SUPPLY UNIT

The VDC and +24VDC supply voltages are connected with many exposed signal connections in the drive system.

- Use a power supply unit that meets the PELV (Protective Extra Low Voltage) requirements.
- Connect the negative output of the power supply unit to PE (ground).

Failure to follow these instructions will result in death or serious injury.

Cable specifications and terminal

- Shielded cable
- Twisted-pair cables
- Grounding of the shield at both ends

Maximum cable length [1]	[m]	100
Minimum conductor cross section	[mm²]	0.14 (AWG 24)
Maximum connection cross section	[mm²]	0.6 (AWG 20)
Stripping length	[mm]	2.5 ... 3.0

1) The length depends on the conductor cross section and the driver circuit used

▶ Use equipotential bonding conductors, see page 47.

▶ Use pre-assembled cables to reduce the risk of wiring errors.

▶ Verify that wiring, cables and connected interfaces meet the PELV requirements.

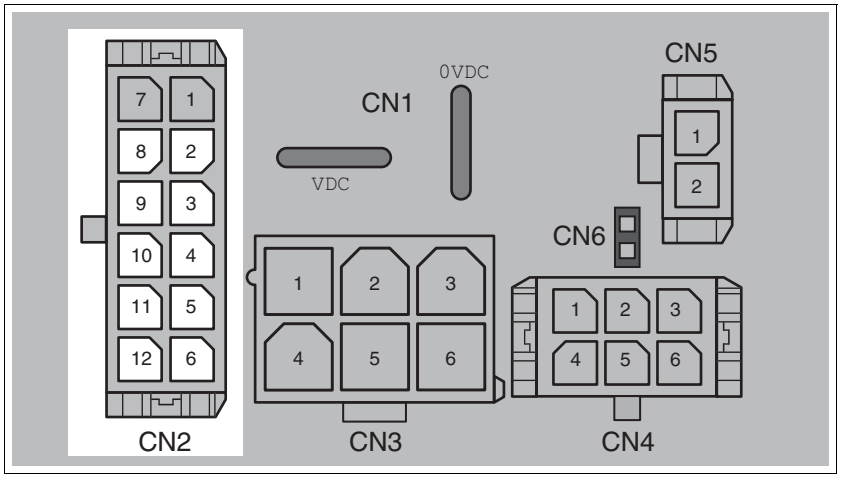

Figure 6.7 Pin assignment multifunction interface

0198441113556, V2.00, 09.2008

Pin	Signal	Function	I/O
4	DATA_1	Bit 0 for selection of a data set	I
5	DATA_2	Bit 1 for selection of a data set	I
6	DATA_4	Bit 2 for selection of a data set	I
10	DATA_8 / SEL_DATA	Input function depends on the processing method 1) Direct selection of data sets: Bit 3 for selection of a data set 2) Sequential selection of data sets: The signal changes its function after activation of the power stage. See 8.2.9 "Processing mode "Sequential selection of data sets"".	I
11	START	Start for currently selected data set. The required signal level depends on the value set in the parameter GlobCond. See 8.2.3 "Global settings".	I
12	ENABLE	Rising edge: Enable power stage Falling edge: Disable power stage and reset error	I
2	+24VDC_2	External signal power supply Power supply for galvanically isolated outputs NO_FAULT_OUT, FUNCT1_OUT and FUNCT2_OUT	I
3	NO_FAULT_OUT	Error output	O
8	FUNCT1_OUT	Signal output with selectable function: Handshake Trigger output Drive referenced Power stage enabled Motor movement active Limit switch tripped Selective error output	O
9	FUNCT2_OUT	Signal output with selectable function: Selection options as in FUNCT1_OUT	O

0198441113556, V2.00, 09.2008

6.3.7 RS485 connection

Function

The drive system is commissioned via the RS485 interface and the commissioning software.

Cable specifications and terminal

- Shielded cable
- Twisted-pair cables
- Grounding of the shield at both ends

Maximum cable length	[m]	400
Minimum conductor cross section	[mm^2]	0.25 (AWG 22)
Maximum connection cross section	[mm^2]	1.0 (AWG 18)
Stripping length	[mm]	3.0 ... 3.5

▶ Use equipotential bonding conductors, see page 47.

▶ Use pre-assembled cables to reduce the risk of wiring errors.

▶ Verify that wiring, cables and connected interfaces meet the PELV requirements.

Setting address and baud rate

Each device on the network is identified by a unique, adjustable node address.

Factory settings:

- Address: 1
- Baud rate: 9600
- Data format: 7 bits
  Even parity
  1 stop bit

The address and the baud rate of the RS485 interface can be set via the commissioning software.

NOTE: Each device must have its own unique node address, which may only be assigned once in the network.

0198441113556, V2.00, 09.2008

Pin assignment printed circuit board connector

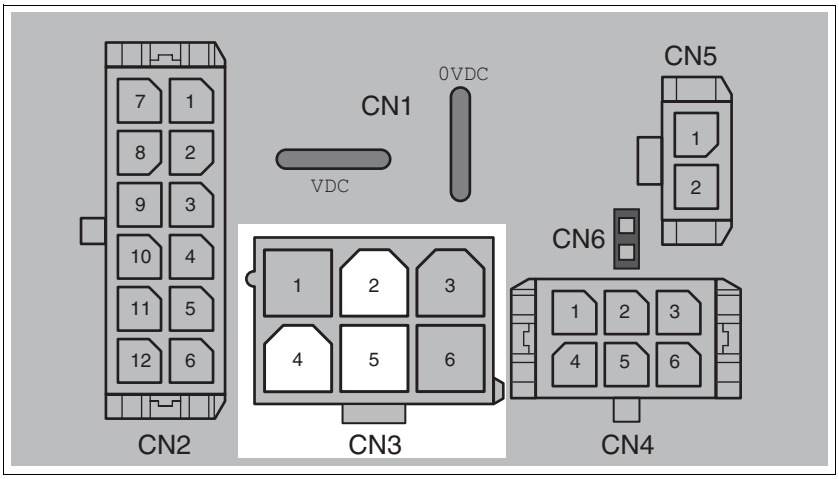

Figure 6.8 Pin assignment RS485

Pin	Signal	Meaning	Color [1)]
2	`+RS485`	RS485 interface	Brown/green
5	`-RS485`	RS485 interface	White/yellow
4	`RS485_0V`	Internally connected to `CN1.0VDC`	Yellow/brown

1) Information relates to pre-assembled cables

6.3.8 24V signal interface connection

24V signal power supply

The 24V signal power supply provided for constant supply of the sensor system.

It must not be connected in parallel with the 24V signal power supply of a different drive.

Cable specifications and terminal

Minimum conductor cross section	[mm^2]	0.2 (AWG 24)
Maximum connection cross section	[mm^2]	0.6 (AWG 20)
Stripping length	[mm]	2.5 ... 3.0

- ▶ Use pre-assembled cables to reduce the risk of wiring errors.
- ▶ Verify that wiring, cables and connected interfaces meet the PELV requirements.

0198441113556, V2.00, 09.2008

parameterization

The 24V signals can be configured with the parameters `IO.IO0_def, 34:1` to `IO.IO3_def, 34:4` as either input or output. Specific functions can also be assigned.

Function	Possible for signal	Remarks
Positive limit switch	IO0	Logic level can be configured
Index pulse output	IO0	
Negative limit switch	IO1	Logic level can be configured
STOP switch	IO0..3	Logic level can be configured
Reference switch	IO0..3	For reference movement to REF, level can be configured
Freely usable	IO0..3	Free access via fieldbus
Programmable	IO0..3	see chapter 8.4.4 "Programmable inputs and outputs"

Factory settings

The 24V signals have the following factory settings:

Signal	Function	Logic level	I/O
IO0	Positive limit switch	Active 0 (failsafe)	I
IO1	Negative limit switch	Active 0 (failsafe)	I
IO2	Jog right	Active 1	I
IO3	Jog left	Active 1	I

⚠ CAUTION

LOSS OF CONTROL

The use of $\overline{\texttt{LIMP}}$ and $\overline{\texttt{LIMN}}$ can provide some protection against hazards (e.g. collision with mechanical stop caused by incorrect reference values).

- Use $\overline{\texttt{LIMP}}$ and $\overline{\texttt{LIMN}}$ where possible.
- Verify that the external sensors or switches are properly connected.
- Verify the correct of the limit switches. The limit switches must be mounted in a position far enough away from the mechanical stop to allow for an adequate stopping distance.
- Before you can use $\overline{\texttt{LIMP}}$ and $\overline{\texttt{LIMN}}$, you must enable them.

Failure to follow these instructions can result in injury or equipment damage.

During movements the two limit switches are monitored with the input signals $\overline{\texttt{LIMP}}$ and $\overline{\texttt{LIMN}}$. If the drive moves to a limit switch, the motor stops. Triggering of the limit switch is signaled.

The external monitoring signals $\overline{\texttt{LIMP}}$, $\overline{\texttt{LIMN}}$, $\overline{\texttt{REF}}$ and `STOP` are enabled with the parameter `Settings.SignEnabl, 28:13`.

0198441113556, V2.00, 09.2008

Use active 0 monitoring signals if possible, because they are failsafe. Evaluation for active 0 or 1 is set with the parameter `Settings.SignLevel, 28:14`.

For more information see chapter 7 "Commissioning".

Pin assignment printed circuit board connector

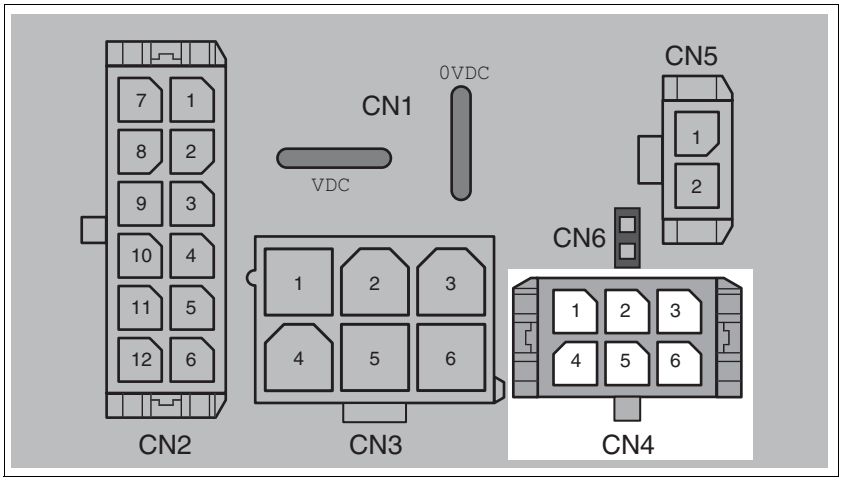

Figure 6.9 Pin assignment of the 24V signal interface

Pin	Signal	Meaning	Color [1)]	I/O
1	`+24VDC_OUT`	The 24V signal supply may be used to supply the sensor system (e.g. limit switches)	Red/blue	O
2	`IO2`	Freely usable input / output	Gray/pink	I/O
3	`IO0`	Freely usable input / output		I/O
4	`0VDC`	Internally connected to `CN1.0VDC`		
5	`IO3`	Freely usable input / output	White/green	I/O
6	`IO1`	Freely usable input / output		I/O

1) Information relates to pre-assembled cables

0198441113556, V2.00, 09.2008

6.3.9 Connection of STO safety function

⚠ WARNING

LOSS OF SAFETY FUNCTION

Incorrect usage may cause a hazard due to the loss of the safety function.

- Observe the requirements for using the safety function.

Failure to follow these instructions can result in death or serious injury.

Requirements

For information and requirements relating to the STO safety function, see chapter 5.3 "Safety function STO ("Safe Torque Off")".

Cable specifications and terminal

- Shielded cable corresponding to the requirements for protected layout of wires

Minimum conductor cross section	[mm^2]	0.34 (AWG 20)
Maximum connection cross section	[mm^2]	0.6 (AWG 20)
Stripping length	[mm]	2.5 ... 3.0

▶ Use equipotential bonding conductors, see page 47.

▶ Use pre-assembled cables to reduce the risk of wiring errors.

▶ Verify that wiring, cables and connected interfaces meet the PELV requirements.

The cable available as an accessory is a special cable that is only available with a connector. The shield of the cable is connected to the grounded housing of the drive via the metal connector. It is sufficient to connect one end of the cable to the grounded housing.

0198441113556, V2.00, 09.2008

Pin assignment printed circuit board connector

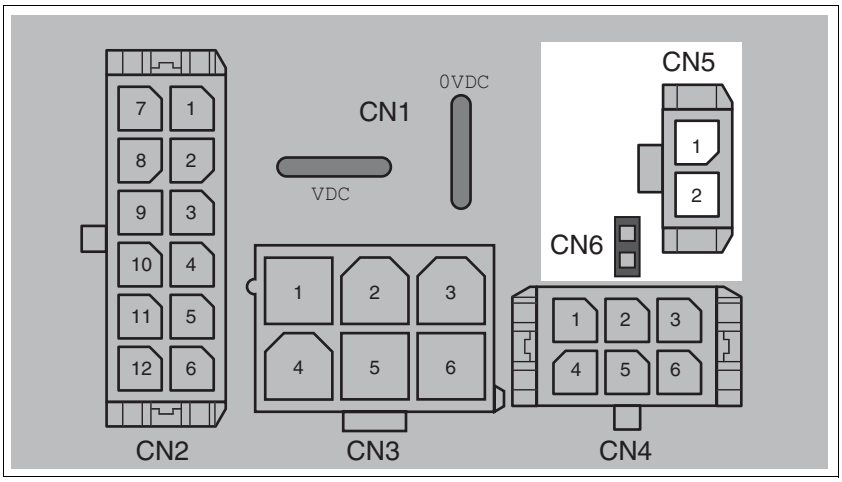

Figure 6.10 Pin assignment of safety function

Pin	Signal	Meaning
CN5.1	$\overline{\text{STO_A}}$ ($\overline{\text{PWRR_A}}$)	Safety function STO "Safe Torque Off" (IEC/ EN 61800-5-2)
CN5.2	$\overline{\text{STO_B}}$ ($\overline{\text{PWRR_B}}$)	Safety function STO "Safe Torque Off" (IEC/ EN 61800-5-2)
CN6		Jumper plugged in: STO disabled Jumper removed: STO enabled

NOTE: Jumper CN5 cannot be plugged in as long as jumper CN6 is still plugged in (mechanical lock).

Connecting the safety function

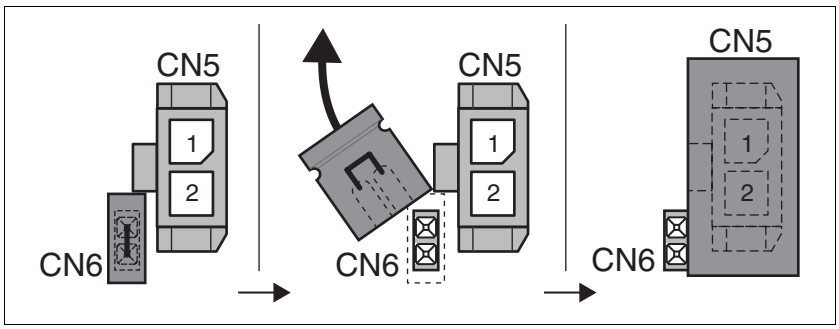

- ▶ Remove jumper CN6.
- ▶ Connect the connector to CN5.

0198441113556, V2.00, 09.2008

6.4 Connection accessories

6.4.1 Accessory "Cable, Power, Motion Sequence, I/O, STO"

The accessory makes the signals available outside of the device in two ways. The signals `I00` and `I01` the STO safety function are made available outside of the device via industrial connectors. The remaining signals and the supply voltage are made available via 2 cables.

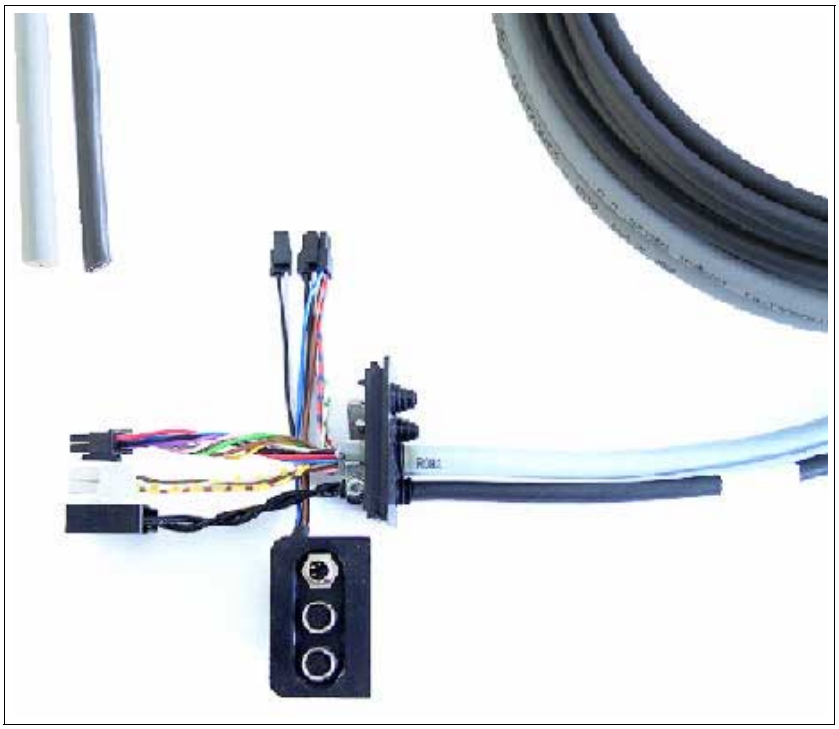

Figure 6.11 Overview

Cable for supply voltage

Number [1]	Signal	Meaning
1	VDC	Supply voltage
2	0VDC	Reference potential to VDC

1) Information relates to pre-assembled cables. The numbers are also printed on the insulation.

0198441113556, V2.00, 09.2008

Cable for signals The table below shows the wire colors assigned to the various signals.

Color [1]	Signal	Meaning	I/O	Internal pin
White	DATA_1	Bit 0 for selection of a data set	I	CN2.4
Brown	DATA_2	Bit 1 for selection of a data set	I	CN2.5
Green	DATA_4	Bit 2 for selection of a data set	I	CN2.6
Yellow	DATA_8 / SEL_DATA	Input function depends on the processing method	I	CN2.10
Gray	START	Start for currently set data set	I	CN2.11
Pink	ENABLE	Enable power stage	I	CN2.12
Red	+24VDC_2	Power supply for the function of the galvanically isolated outputs NO_FAULT_OUT, FUNCT1_OUT and FUNCT2_OUT see chapter 6.3.6 "Connection of multi-function interface"	I	CN2.2
Blue	NO_FAULT_OUT	Error output	O	CN2.3
Black	FUNCT1_OUT	Signal output with selectable function	O	CN2.8
Violet	FUNCT2_OUT	Signal output with selectable function	O	CN2.9
Brown/green	+RS485	RS485 interface	-	CN3.2
White/yellow	-RS485	RS485 interface	-	CN3.5
Yellow/brown	RS485_0V	Internally connected to CN1.0VDC	-	CN3.4
Red/blue	+24VDC	24V signal supply IO0 ... IO3	I	CN4.1
Gray/pink	IO2	Freely usable input / output	I/O	CN4.2
	IO0	Freely usable input / output	I/O	CN4.3
	0VDC	Internally connected to CN1.0VDC	-	CN4.4
White/green	IO3	Freely usable input / output	I/O	CN4.5
	IO1	Freely usable input / output	I/O	CN4.6

1) Information relates to pre-assembled cables

Signal insert The signals for the STO safety function and 2 of the freely usable inputs and outputs IO0 and IO1 are made available via industrial connectors.

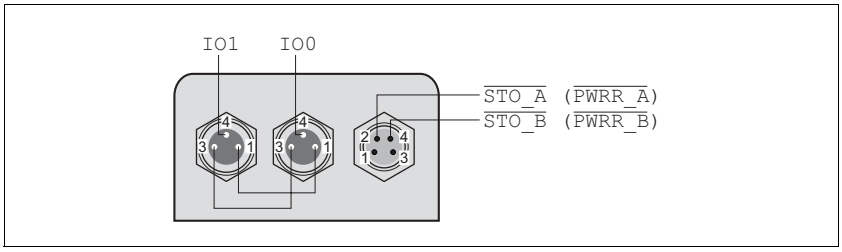

Figure 6.12 Pin assignment

Pin 1 is internally connected to +24VDC_OUT of the internal 24V signal power supply, pin 3 is connected to 0VDC.

The internal 24V signal power supply may be used for the power supply of connected sensors (e.g. limit switches)

0198441113556, V2.00, 09.2008

6.4.2 Accessory "Cable, Power, Motion Sequence"

The accessory makes all signals with the exception of the STO safety function available outside of the device via a cable entry. In addition, a cable entry is provided to replace the second shipping lock.

Cable for supply voltage

Number [1]	Signal	Meaning
1	VDC	Supply voltage
2	0VDC	Reference potential to VDC

1) Information relates to pre-assembled cables. The numbers are also printed on the insulation.

Cable for signals

The table below shows the wire colors assigned to the various signals.

Color [1]	Signal	Meaning	I/O	Internal pin
White	DATA_1	Bit 0 for selection of a data set	I	CN2.4
Brown	DATA_2	Bit 1 for selection of a data set	I	CN2.5
Green	DATA_4	Bit 2 for selection of a data set	I	CN2.6
Yellow	DATA_8 / SEL_DATA	Input function depends on the processing method	I	CN2.10
Gray	START	Start for currently set data set	I	CN2.11
Pink	ENABLE	Enable power stage	I	CN2.12
Red	+24VDC_2	Power supply for the function of the galvanically isolated outputs NO_FAULT_OUT, FUNCT1_OUT and FUNCT2_OUT see chapter 6.3.6 "Connection of multi-function interface"	I	CN2.2
Blue	NO_FAULT_OUT	Error output	O	CN2.3
Black	FUNCT1_OUT	Signal output with selectable function	O	CN2.8
Violet	FUNCT2_OUT	Signal output with selectable function	O	CN2.9
Brown/green	+RS485	RS485 interface	-	CN3.2
White/yellow	–RS485	RS485 interface	-	CN3.5
Yellow/brown	RS485_0V	Internally connected to CN1.0VDC	-	CN3.4
Red/blue	+24VDC	24V signal supply IO0 ... IO3	I	CN4.1
Gray/pink	IO2	Freely usable input / output	I/O	CN4.2
White/gray	IO0	Freely usable input / output	I/O	CN4.3
	0VDC	Internally connected to CN1.0VDC	-	CN4.4
White/green	IO3	Freely usable input / output	I/O	CN4.5
Gray/brown	IO1	Freely usable input / output	I/O	CN4.6

1) Information relates to pre-assembled cables

0198441113556, V2.00, 09.2008

6.5 Checking wiring

Check the following:

- ▶ Did you properly install and connect all cables and connectors?
- ▶ Are there any live, exposed cables?
- ▶ Did you properly connect the signal wires?
- ▶ Did you properly install all seals (degree of protection IP54)?

0198441113556, V2.00, 09.2008

7 Commissioning

⚠ WARNING

UNEXPECTED MOVEMENT

When the drive is operated for the first time, there is a risk of unexpected movements caused by possible wiring errors or unsuitable parameters.

- Perform the first test run without coupled loads.
- Verify that a functioning button for EMERGENCY STOP is within reach.
- Anticipate movements in the incorrect direction or oscillation of the drive.
- Only start the system if there are no persons or obstructions in the hazardous area.

Failure to follow these instructions can result in death, serious injury or equipment damage.

⚠ WARNING

UNINTENDED BEHAVIOR

The behavior of the drive system is governed by numerous stored data or settings. Unsuitable settings or data may trigger unexpected movements or responses to signals and disable monitoring functions.

- Do NOT operate the drive system with unknown settings or data.
- Verify that the stored data and settings are correct.
- When commissioning, carefully run tests for all operating states and potential fault situations.
- Verify the functions after replacing the product and also after making changes to the settings or data.
- Only start the system if there are no persons or obstructions in the hazardous area.

Failure to follow these instructions can result in death, serious injury or equipment damage.

⚠ WARNING

ROTATING PARTS

Rotating parts may cause injuries and may catch clothing or hair. Loose parts or parts that are unbalanced may be flung.

- Verify correct mounting and installation of all rotating parts.
- Use a cover to help protect against rotating parts.

Failure to follow these instructions can result in death, serious injury or equipment damage.

0198441113556, V2.00, 09.2008

⚠ WARNING

MOTOR WITHOUT BRAKING EFFECT

If power outage and faults cause the power stage to be switched off, the motor is no longer stopped by the brake and may increase its speed even more until it reaches a mechanical stop.

- Verify the mechanical situation.
- If necessary, use a cushioned mechanical stop or a suitable brake.

Failure to follow these instructions can result in death, serious injury or equipment damage.

⚠ WARNING

FALLING PARTS

The motor may move as a result of the reaction torque; it may yyyyy tip and fall.

- Mount the motor securely so it will not break loose during strong acceleration.

Failure to follow these instructions can result in death, serious injury or equipment damage.

⚠ CAUTION

HOT SURFACES

Depending on the operation, the surface may heat up to more than 100°C (212°F).

- Do not allow contact with the hot surfaces.
- Do not allow flammable or heat-sensitive parts in the immediate vicinity.
- Consider the measures for heat dissipation described.
- Check the temperature during test runs.

Failure to follow these instructions can result in injury or equipment damage.

0198441113556, V2.00, 09.2008

7.1 Preparing for commissioning

The following tests are required before commissioning:

▶ Wiring and connection of all cables and system components

▶ Function of the limit switch, if installed

One of the following must be available:

- Fieldbus master (e.g. PLC) or industrial PC
- Commissioning software

The commissioning software is used for parameterization of the drive and the data sets.

The jog inputs can be used without commissioning software. See 8.3.1 "Operating mode Jog".

0198441113556, V2.00, 09.2008

7.2 Running commissioning

7.2.1 First setup

Prepare a list with the parameters required for the functions used.

The following global settings are available:

Parameter name	Value range / list	Description
`DataSet.Mode`	Direct selection of the data sets Sequential data set selection	Globally defined processing mode Globally defined processing modes are set in the "Motion Sequence Mode" window of the commissioning software.
`DataSet.GlobCond`	Rising edge (0->1) [1)] Falling edge (1->0) 1 level 0 level	Globally defined transition condition. This is used as a transition condition for the start of the first data set and for data sets that have GlobCond set as transition condition.
`DataSet.AutoEnabl`	No [1)] Yes	Automatic enabling of the power stage. Required if `ENABLE` signal input is not wired.
`DataSet.FuncOUT_1` and `DataSet.FuncOUT_2`	Handshake Trigger output Drive referenced Power stage enabled Motor moving Limit switch tripped Selective error output	Function for `FUNCT1_OUT` or `FUNCT2_OUT` signal output.
`DataSet.OutError`	Undervoltage Overvoltage Motor overload Overtemperature Motor blocked STO ("Power Removal") triggered STO ("Power Removal") signals different Limit switch bounced Interruption LIMP Interruption LIMN Interruption STOP	Error number for selective error output. Number of the error during which the `FUNCT1_OUT` or `FUNCT2_OUT` signal output changes to 1 level.

1) factory setting

0198441113556, V2.00, 09.2008

The global parameters are configured in the parameter window of the commissioning software:

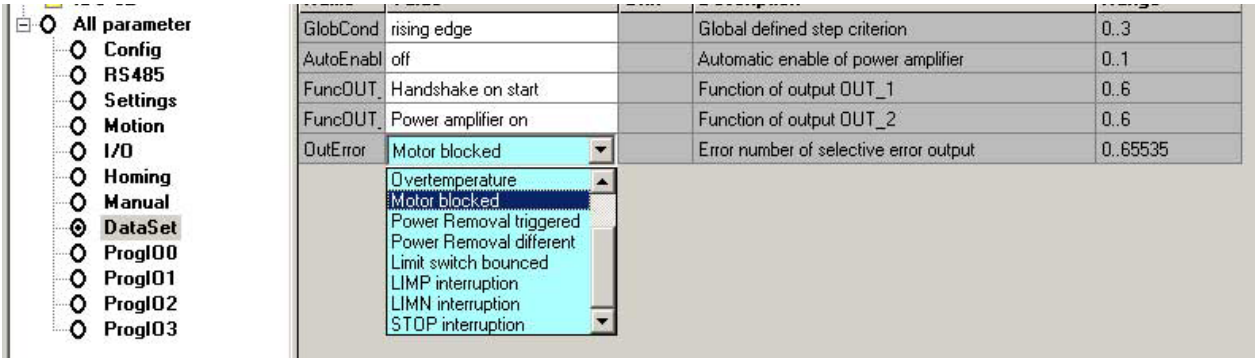

Figure 7.1 Parameter window of the commissioning software, parameter group `DataSet`

An exception is the parameter `DataSet.Mode`, which is configured in the "Motion Sequence Mode" window of the commissioning software:

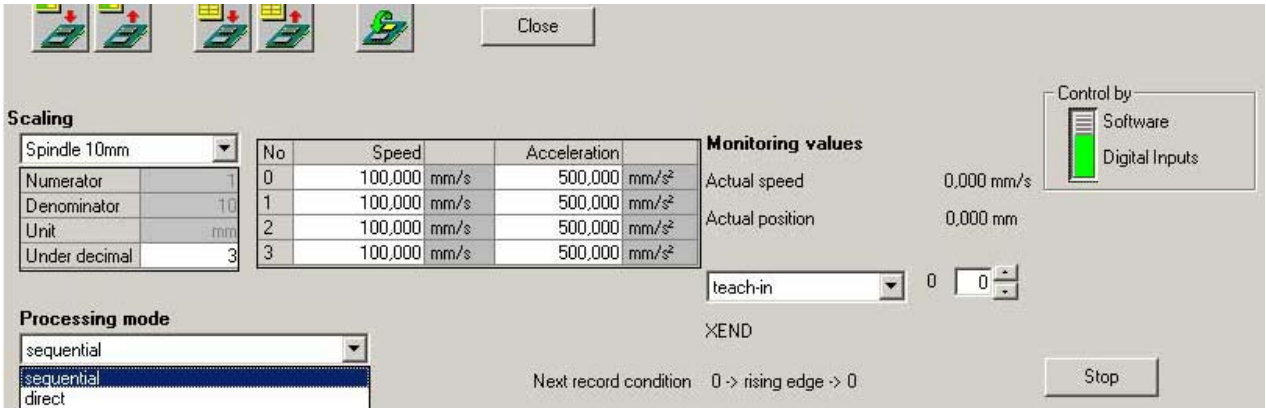

Figure 7.2 Parameter `DataSet.Mode`

The configuration of the data sets is described in 8.2 "Control mode "Motion Sequence"".

0198441113556, V2.00, 09.2008

Direction of rotation

Rotation of the motor shaft in a clockwise or counterclockwise direction of rotation. Clockwise rotation is when the motor shaft rotates clockwise as you look at the end of the protruding motor shaft.

The direction of rotation can be reversed with the parameter `Motion.invertDir 28:6`.

The new value is only activated when the drive is switched on.

▶ Save the parameter to the EEPROM

▶ Switch the supply voltage off and on.

If you invert the direction of rotation, verify once again that the limit switches are properly wired.

- Connect the positive limit switch to `IO0`
- Connect the negative limit switch to `IO1`

The positive limit switch is the switch that is tripped by the mechanical system if the motor shaft rotates as follows:

- Without inversion of the direction of rotation: Clockwise
- Without inversion of the direction of rotation: Counter-clockwise

0198441113556, V2.00, 09.2008

7.2.2 Starting 24V signal interface

7.2.2.1 Setting the functions of the 24V signals

You can configure the 24V signals as input or output with the parameters `IO.IO0_def 34:1` to `IO.IO3_def 34:4` and assign specific functions to the 24V signals.

For more information see chapter 6 "Installation".

7.2.2.2 Testing 24V signals

The following table shows the readable and writable status of the 24V signals and the possible parameter settings.

Group.Name Index:Subindex dec. (hex.)	Description Bit assgnment	Data type range dec.	Unit Default dec.	R/W per.
I/O.IO0_def 34:1 (22:01$_h$)	Configuration of IO0 Value 0: Input freely usable Value 1: Input LIMP (only with IO0) Value 2: Input LIMN (only with IO1) Value 3: Input STOP Value 4: Input REF Value 5: Input programmable Value 128: Output freely usable Value 129: Output index pulse (only with IO0) Value 130: Output programmable	UINT16 0..255	- 1	R/W per.
I/O.IO1_def 34:2 (22:02$_h$)	Configuration of IO1 See parameter IO0_def	UINT16 0..255	- 2	R/W per.
I/O.IO2_def 34:3 (22:03$_h$)	Configuration of IO2 See parameter IO0_def	UINT16 0..255	- 5	R/W per.
I/O.IO3_def 34:4 (22:04$_h$)	Configuration of IO3 See parameter IO0_def	UINT16 0..255	- 5	R/W per.

Testing the signal inputs and limit switches

Proceed as follows for testing:

▶ Trigger the limit switch or the sensor manually.

The corresponding bit in parameter `IO.IO_act 33:1` must be 1 as long as the input is logic 1.

Checking the freely usable signal outputs

Proceed as follows for testing:

▶ Write the value required to set the associated output to logic 1 to parameter `IO.IO_act 33:1`.

▶ Measure the voltage at the output or check the response of the connected actuator.

0198441113556, V2.00, 09.2008

7.2.2.3 Testing the function of limit switches

Monitoring of the $\overline{\texttt{LIMP}}$ / $\overline{\texttt{LIMN}}$ limit switches is activated in the factory settings. In all drives without limit switches, monitoring must be disabled with the parameter `Settings.SignEnabl, 23:13`, value = 0.
The factory setting for the STOP input is "disabled".

Condition: The limit switch signals are monitored.

For more information see chapter 7.2.2.2 "Testing 24V signals".

Group.Name Index:Subindex dec. (hex.)	Description Bit assgnment	Data type range dec.	Unit Default dec.	R/W per.
Settings.SignEnabl 28:13 (1C:0D$_h$)	Activation of monitoring inputs Bit value 0: Monitoring is not active Bit value 1: Monitoring is active Assignment of bits: Bit 0: LIMP (positive limit switch) Bit 1: LIMN (negative limit switch) Bit 2: STOP (STOP switch) Bit 3: REF (reference switch) NOTE: Monitoring is only active if the I/O port is configured as the corresponding function (parameter I/O.IO0_def to IO3_def).	UINT16 0..15	- 2	R/W per.
Settings.SignLevel 28:14 (1C:0E$_h$)	Signal level for monitoring inputs Used to define whether errors are triggered at 0 or 1 level. Bit value 0: Response at 0 level Bit value 1: Response at 1 level Assignment of bits: Bit 0: LIMP Bit 1: LIMN Bit 2: STOP Bit 3: REF	UINT16 0..15	- 0	R/W per.
Status.Sign_SR 28:15 (1C:0F$_h$)	Stored signal status of external monitoring signals Bit value 0: not activated Bit value 1: activated Assignment of bits: Bit 0: LIMP Bit 1: LIMN Bit 2: STOP Bit 3: REF Bit 7: SW stop Stored signal status of released external monitoring signals	UINT16 0..15	- -	R/-

0198441113556, V2.00, 09.2008

You can change enabling of the external monitoring signals $\overline{\text{LIMP}}$, $\overline{\text{LIMN}}$ and STOP with the parameter `Settings.SignEnabl 28:13`; use the parameter `Settings.SignLevel 28:14` to change evaluation for active LOW or HIGH.

- ▶ Connect the limit switch that limits the working range for clockwise rotation to $\overline{\text{LIMP}}$.
- ▶ Connect the limit switch that limits the working range for counter-clockwise rotation to $\overline{\text{LIMN}}$.
- ▶ Verify the function of the limit switches with the parameter `Status.Sign_SR 28:15`.
- ▶ Enable the power stage.
- ▶ Run a "Fault Reset".

  After that, no bit may be set in parameter `Status.Sign_SR 28:15`.
- ▶ Briefly actuate the limit switch manually.

  After that, the corresponding bit must be set in parameter `Status.Sign_SR 28:15`.
- ▶ Run a "Fault Reset".

  After that, no bit may be set in parameter `Status.Sign_SR 28:15`.

0198441113556, V2.00, 09.2008

7.2.3 Setting the motor phase currents

⚠ WARNING

FALLING LOAD AT STANDSTILL

If the current reduction is enabled, the motor torque at standstill is reduced; if external forces act on the drive (vertical axes), this may cause the load to fall.

- Verify that the load conditions allow for operation with current reduction.
- If necessary, switch on the current reduction.

Failure to follow these instructions can result in death, serious injury or equipment damage.

For commissioning use low motor phase currents (10% of nominal current) so the drive moves with a low torque.

Group.Name Index:Subindex dec. (hex.)	Description Bit assgnment	Data type range dec.	Unit Default dec.	R/W per.
Settings.I_still 14:1 (0E:01_h)	Motor phase current standstill Becomes active after 100ms motor standstill. Current is specified in percent of nominal current.	UINT16 0..100	% 70	R/W per.
Settings.I_acc 14:2 (0E:02_h)	Motor phase current acceleration / deceleration Current is specified in percent of nominal current.	UINT16 0..100	% 100	R/W per.
Settings.I_const 14:3 (0E:03_h)	Motor phase current constant movement Current is specified in percent of nominal current.	UINT16 0..100	% 100	R/W per.
Settings.I_stop 14:4 (0E:04_h)	Motor phase current for "Quick Stop" Current is specified in percent of nominal current.	UINT16 0..100	% 100	R/W per.

0198441113556, V2.00, 09.2008

7.2.4 Testing safety functions

Operation with STO

If you wish to use the STO safety function, carry out the following steps. Perform the steps exactly in the sequence described.

- Supply voltage switched off.
- ▶ Verify that the inputs $\overline{\text{STO_A}}$ ($\overline{\text{PWRR_A}}$) and $\overline{\text{STO_B}}$ ($\overline{\text{PWRR_B}}$) are electrically isolated from each other. The two signals must not be electrically connected.
- ▶ Trigger the safety function. $\overline{\text{STO_A}}$ ($\overline{\text{PWRR_A}}$) and $\overline{\text{STO_B}}$ ($\overline{\text{PWRR_B}}$) must be switched off.
- ▶ Switch on the VDC supply voltage.
- ▶ Reset the safety function. $\overline{\text{STO_A}}$ ($\overline{\text{PWRR_A}}$) and $\overline{\text{STO_B}}$ ($\overline{\text{PWRR_B}}$) must be switched on simultaneously (time offset <1s).
- ▶ Enable the power stage via the ENABLE signal input.
- ◁ The power stage is enabled. If the power stage is not enabled, there is a wiring error.
- ▶ Verify that the DataSet.AutoEnabl parameter is set to "off" to avoid unexpected restart.
- ▶ Trigger the safety function. $\overline{\text{STO_A}}$ ($\overline{\text{PWRR_A}}$) and $\overline{\text{STO_B}}$ ($\overline{\text{PWRR_B}}$) must be switched off simultaneously (time offset <1s).
- ◁ The power stage is disabled and the output NO_FAULT_OUT is set. If the power stage is not disabled, there is a wiring error.
- ▶ Check the behavior of the drive during fault conditions.
- ▶ Document all tests of the safety function in your acceptance certificate.

Operation without STO

If you do not want to use the STO safety function:

- ▶ Verify that jumper CN6 is connected.

0198441113556, V2.00, 09.2008

7.2.5 Optimizing the motor behavior

Setting the slope of the ramps

▶ Enter the slopes of the ramp function in the parameter `Motion.acc, 29:26`. The following formulas can be used to estimate the values for input:

$$\text{Moment of acceleration} \leq \frac{30\,\alpha}{\pi}$$

$$\alpha = \frac{M_M - M_L}{J_{total}}$$

Physical value/ nominal value	Meaning	Unit
M_M	Available torque of motor	Nm
M_L	Load torque	Nm
J_{total}	Mass moment of inertia	kgm^2
α	Angular acceleration	rad/sec^2
Motion.acc	Acceleration parameters	min^{-1}/s

Reference speed

The reference speed for the motor depends on the application requirements.

▶ Set the reference speed with the parameter `Motion.v_target0 29:23`.

0198441113556, V2.00, 09.2008

Torque characteristic of the motor

The available torque of the motor depends on the following factors:

- Size
- Speed
- Supply voltage (the dependency starts at a specific speed of rotation at which the torque decreases drastically)

See the characteristic curve of the motor in the catalog for the dependency of the torque on the speed.

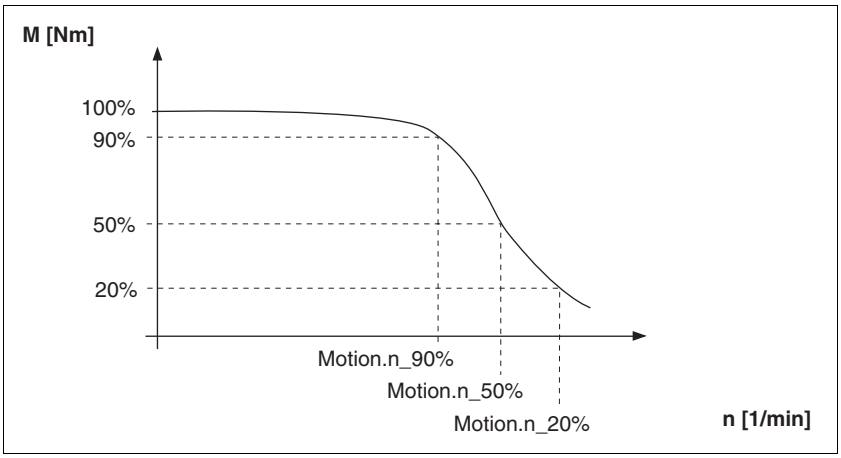

Figure 7.3 Typical torque characteristic of a stepper motor

At a specific speed of rotation the available torque decreases drastically with increasing speeds. The available acceleration is reduced correspondingly.

0198441113556, V2.00, 09.2008

7.3 Lexium CT commissioning software

The commissioning software has a graphic user interface and is used for commissioning, diagnostics and testing settings.

The individual data sets for direct and sequential processing mode are parameterized with this software.

Source commissioning software

The latest version of the commissioning software is available for download from the internet:

http://www.schneider-electric.com

Functions of the commissioning software

The functions of the commissioning software include:

- Scan various fieldbuses for devices
- Extensive information on connected devices
- Display and enter device parameters
- Archive and duplicate device parameters
- Manual positioning of the motor
- Test input and output signals
- Record, evaluate and archive motion and signals
- Error diagnostics
- Optimize control behavior (servo motors only)

System requirements

The minimum hardware requirements for installation and operation of the software are:

- IBM-compatible PC
- Approx. 200 MB of hard disk space
- 512 MB RAM
- Graphics card and monitor with a resolution of at least 1024x768 pixels
- Free serial interface (RS232) or free USB interface
- Operating system Windows 2000, Windows XP Professional or Windows Vista
- Acrobat Reader 5.0 or newer
- Internet connection (for initial installation and updates)

Online help

The commissioning software offers comprehensive help functions, which can be accessed via "? - Help Topics" or by pressing the F1 key.

Interface	PC interface	Required fieldbus converter	Source
RS485	USB	NuDAM ND-6530	http://www.acceed.com
RS485	RS232	NuDAM ND-6520	http://www.acceed.com

0198441113556, V2.00, 09.2008

7.3.1 Firmware update via fieldbus

CAUTION

DAMAGE TO THE PRODUCT CAUSED BY POWER OUTAGE

If the supply voltage becomes unavailable during an update, the product will be damaged and must be sent in for repair.

- Do not switch off the supply voltage during the update.
- Update the firmware only with a reliable supply voltage.

Failure to follow these instructions can result in equipment damage.

Flashkit

The Flashkitallows you to update the firmware via the relevant fieldbus. The Flashkit supports the same fieldbus converters as the commissioning software.

Please contact your local sales office to obtain the Flashkit and for support.

Determining the firmware version

You can determine the firmware number and the firmware version with the commissioning software by opening the device information window.

7.3.2 Scaling

Scaling is set in the commissioning software. A scaling factor is defined with numerator and denominator. The scaling factor defines the relationship between the number of motor revolutions and the unit required for this. The numerator corresponds to the number of revolutions. The denominator corresponds to the value of the selected unit.

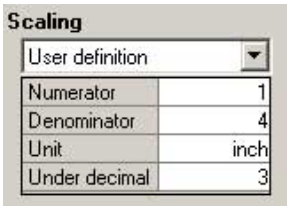

Figure 7.4 Scaling

One revolution corresponds to 4 inches in the example.

The number of decimal places required for rounding is set in the "under decimal" field.

The factory setting is a spindle with a pitch of 10 mm.

0198441113556, V2.00, 09.2008

8 Operation

The chapter "Operation" describes the "Motion Sequence" control mode as well as basic operating states, operating modes and functions of the drive.

*An alphabetically sorted overview of **all** parameters can be found in the chapter "Parameters". The use and the function of some parameters are explained in more detail in this chapter.*

8.1 Basics

All speed and position values listed below relate to the motor drive shaft (without gearbox).

8.1.1 Default parameter values

The following default parameter values can be adapted to meet the requirements of the application.

- Accelerations
  - Acceleration and deceleration in general

    (parameter `Motion.acc, 29:26`)
  - Deceleration for "Quick Stop"

    (parameter `Motion.dec_Stop, 28:21`)
- Definition of the direction of rotation

  (parameter `Motion.invertDir, 28:6`)
- Signal interface
  - Definition of I/O signals

    (Parameter group I/O)
  - Enabling limit switches

    (Parameter group I/O)
- User device name

  (Parameters `Settings.name1, 11:1` and `Settings.name2, 11:2`)

0198441113556, V2.00, 09.2008

8.1.2 External monitoring signals

You can enable, set and monitor the external monitoring signals.

Available external monitoring signals:

- Axis signals
  - Positive limit switch $\overline{\texttt{LIMP}}$
  - Negative limit switch $\overline{\texttt{LIMN}}$
  - Stop switch `STOP`
  - Reference switch $\overline{\texttt{REF}}$

8.1.2.1 Axis signals

Configuring the axis signals

Before the external monitoring signals can be used, the signal inputs must be configured for this function (parameter group I/O).

Setting the signal levels

After you have configured the signal inputs, adjust the signal levels for the individual signal inputs.
(parameter `Settings.SignLevel, 28:14`)

- Value 0: Response at 0 level (failsafe)
- Value 1: Response at 1 level

Activating the axis signals

In the last step you enable the external signal inputs so the incoming signals will be evaluated
(parameter `Settings.SignEnable, 28:13`).

Reading the axis signals

The saved signal status of the enabled external signal inputs can read out at any time.
(parameter `Status_SignSR, 28:15`).

Monitoring the axis signals

During operation the two limit switches $\overline{\texttt{LIMN}}$ and $\overline{\texttt{LIMP}}$ are monitored. If a limit switch is tripped, the motor stops with the set "Quick Stop" deceleration (parameter `Motion.dec_Stop, 28:21`) and the event is saved (parameter `Status.Sign_SR, 28:15`).

Set up the limit switches in such a way as to keep the motor from overtraveling the limit switches.

Moving away from switch

The drive can be moved away from the limit switch range at any time by a reference movement or a jog movement.

For more information see chapter 8.3.3 "Operating mode Homing" or 8.3.1 "Operating mode Jog".

External monitoring signal $\overline{\texttt{REF}}$

The external monitoring signal $\overline{\texttt{REF}}$ does not have to be enabled for the reference movement. If the external monitoring signal $\overline{\texttt{REF}}$ is enabled, the reference switch also takes the function of an additional stop switch.

0198441113556, V2.00, 09.2008

External monitoring signal STOP

The external monitoring signal `STOP` stops the motor with a "Quick Stop". The signal is stored in the parameter `Status.Sign_SR, 28:15`, bit 2.

To resume processing:

- ▶ Reset the external monitoring signal `STOP` at the signal input.
- ▶ Run a "Fault Reset".

  (parameter `Commands.driveCtrl, 28:1`, Bit 3)
- ▶ Start a new motion command.

The external monitoring signal `STOP` is enabled with the parameter `Settings.SignEnabl, 28:13`, Bit 2.

The signal level of the external monitoring signal `STOP` is set with the parameter `Settings.SignLevel, 28:14`, Bit 2.

8.1.3 Positioning limits

The motor can move to any point within the positioning range once an absolute position has been specified.

The positioning range is -2^{31} to $+2^{31}$ increments (inc).

The positioning resolution is 20000 increments per revolution measured at the motor output shaft (without gearbox).

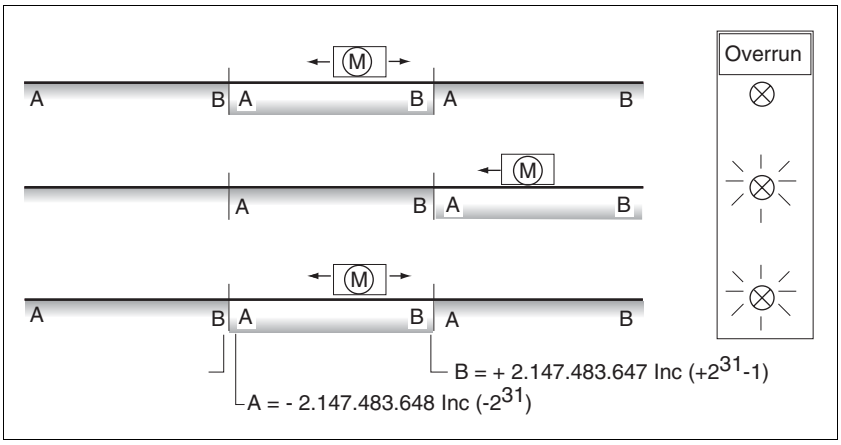

Figure 8.1 Positioning range and range overrun

If the motor exceeds the positioning limits, the internal monitoring signal for position overrun (parameter `Status.WarnSig, 28:10`, bit 0) is set and the working range is shifted by 2^{32} increments.

If the drive was previously referenced, the bit `ref_ok` (parameter `Status.xMode_act, 28:3`, Bit 5) is also reset.

The internal monitoring signal remains set when the motor moves back into the valid range.

Use the parameter `Settings.WarnOvrun, 28:11` to parameterize whether the overrun of the positioning limits is signaled as a warning in the parameter `Status.driveStat, 28:2` bit 7.

"Absolute positioning" is no longer possible after a position overrun.

0198441113556, V2.00, 09.2008

Resetting the signal A reference movement or position setting resets the internal monitoring signal for position overrun.

Position overrun A position overrun is possible in Jog operating mode.

8.1.4 Internal monitoring signals

The internal monitoring signals are used to monitor the drive itself.

Available internal monitoring signals (parameters `Status.WarnSig, 28:10` and `Status.FltSig, 28:17`):

- Stall detection
- Position overrun profile generator (warning)
- Safety function STO "Safe Torque Off" (IEC/EN 61800-5-2)
- Hardware error
- Internal system error
- Nodeguard error fieldbus
- Protocol error fieldbus
- Overvoltage or undervoltage error
- Motor overload
- Overtemperature error

Stall detection The stall detection system checks whether the index pulse is always triggered at the same angular position of the rotating field during the motor movement. If a stepper motor stalls, the motor shaft is displaced in relation to the rotating field by an angle corresponding to one or more complete pairs of poles. One pair of poles corresponds to 1/50 of a revolution.

Constraints

- Stall detection is initially inactive whenever the power stage is enabled. The detection is automatically activated as soon as the index pulse is reached. A stall by one or more pairs of poles is only detected from this point on.
- If the stepper motor stalls during deceleration just before standstill, this will be only detected when the index pulse is reached the next time, i.e. it may only be detected during the next movement.
- If the range of travel of the application is less than one complete motor revolution, the index pulse may be outside of the range of travel. In such a case, stalling of the stepper motor is not detected.
- If the motor shaft is rotated by external forces during standstill, the stall detection does not detect this.

Group.Name Index:Subindex dec. (hex.)	Description Bit assgnment	Data type range dec.	Unit Default dec.	R/W per.
Settings.monitorM 14:7 (0E:07$_h$)	Motor monitoring (stall detection) Value 0: Motor monitoring inactive Value 1: Motor monitoring active	UINT16 0..1	- 1	R/W per.

0198441113556, V2.00, 09.2008

8.1.5 Operating states and state transitions

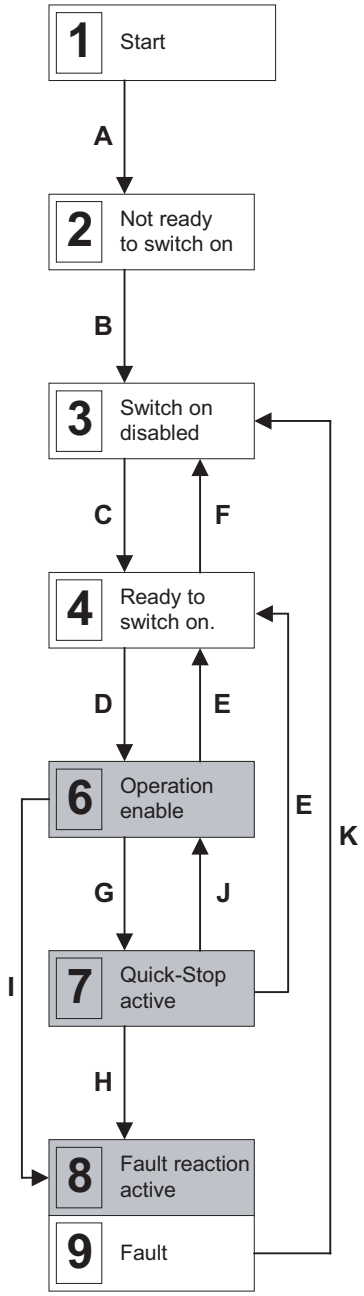

Operating states

1
Initialization of the device electronics and internal self-test.

2
Initialization of parameters.

3
Power stage cannot be enabled. The drive monitors the supply voltage and responds if the supply voltage exceeds the threshold value.

4
Power stage ready to switch on and disabled.

6
Power stage is enabled. The motor has current. The drive is ready.

7
The "Quick Stop" function is active.

8
Error response

9
Drive is in the Fault state

State transitions

A
Automatic transition

B
If the operating state 2 was successful, the transition is performed automatically.

C
$\overline{\text{STO_A}}$ ($\overline{\text{PWRR_A}}$) and $\overline{\text{STO_B}}$ ($\overline{\text{PWRR_B}}$) must have level 1 or jumper CN6 must be plugged in. At the same time, the supply voltage must rise above the threshold value. The transition is performed automatically.

D
The transition is triggered by a rising edge at the ENABLE signal input.

E
The transition is triggered by a falling edge at the ENABLE signal input. For example, this transition can be used to shut off the ecurrent to the motor for maintenance or for work on the system.

F
If the supply voltage drops below the threshold value or the $\overline{\text{STO_A}}$ ($\overline{\text{PWRR_A}}$) and $\overline{\text{STO_B}}$ ($\overline{\text{PWRR_B}}$) inputs drop to 0 level, this triggers an automatic transition.

G
Causes:
Errors of error classes 1 or 2.

H
The motor coasts down.
The cause is an error of error class 2

I
The motor coasts down.
The cause is an error of error classes 3 or 4.

J
An error of error class 1 was acknowledged

K
An error of error classes 2 or 3 was reset by a "Fault Reset".

Gray background:
Power stage switched on

0198441113556, V2.00, 09.2008

Reading the current operating state

The current operating state can be read at any time via the fieldbus. (parameter `Status.driveStat, 28:2`).

Bit	Meaning
0..3	Operating state of the drive For more information see 8.1.5 "Operating states and state transitions"
5	Error message by internal monitoring The bit is set if at least one bit is set in the parameter `Status.FltSig_SR, 28:18`. The cause of the error can be read with the parameter `Status.FltSig_SR, 28:18`.
6	Error message by external monitoring The bit is set if at least one bit is set in the parameter `Status.Sign_SR, 28:15`. The cause of the error can be read with the parameter `Status.Sign_SR, 28:18`.
7	Warning message The bit is set if at least one bit is set in the parameter `Status.WarnSig, 28:10`. The cause can be read with the parameter `Status.WarnSig, 28:10`.
12..15	Monitoring the operating state The bits are identical to: `Manual.stateMan, 41:2`, bits 12..15 `VEL.stateVel, 36:2`, bits 12..15 `PTP.statePTP, 35:2`, bits 12..15 `Homing.stateHome, 40:2`, bits 12..15 `Gear.stateGear, 38:2`, bits 12..15 For more information see chapter 8.3 "Operating modes"

0198441113556, V2.00, 09.2008

8.1.6 Operating-mode-specific status information

Each operating mode has an acknowledgement parameter:

- Jog (as of software version 1.101 and later)
  (parameter `Manual.stateMan, 41:2`)

Information stored in every acknowledgement parameter:

- Bit 0: Error $\overline{\texttt{LIMP}}$
  Error message caused by positive limit switch
- Bit 1: Error $\overline{\texttt{LIMN}}$
  Error message caused by negative limit switch
- Bit 2: Error `STOP`
  Error response with "Quick Stop"
- Bit 3: Error $\overline{\texttt{REF}}$
  Error message caused by reference switch
- Bit 12: Operating-mode-specific
- Bit 13: Operating-mode-specific
- Bit 14: "xxx_end"
  Operating mode terminated
- Bit 15: "xxx_err"
  Fault occurred

Operating-mode-specific status information can be found in chapter 8.3 "Operating modes".

If an error occurs during operation, only bit 15 "xxx_err" is set immediately.

In the event of an error of error class 1 or 2 the motor is ultimately brought to a standstill by "Quick Stop" and then bit 14 "xxx_end" is set.

In the case of an error of error class 3 the power amplifier is immediately switched off and bit 14 and 15 are set before the motor is released.

0198441113556, V2.00, 09.2008

8.1.7 Other status information

In addition to the external and internal monitoring signals, there is status information that contains general information on the drive.

Other available status information:

- Operating mode
  - Current operating mode
    `Status.action_st, 28:19` and
    `Status.xMode_act, 28:3`
- Speed of rotation per minute (min^{-1})
  - Actual speed of motor
    `Status.n_act, 31:9`
  - Reference speed
    `Status.n_ref, 31:8`
  - Actual speed of profile generator
    `Status.n_profile, 31:35`
  - Target speed of profile generator
    `Status.n_target, 31:38`
- Speed in increments per second (Inc/s)
  - Actual speed of motor
    `Status.v_act, 31:2`
  - Reference speed
    `Status.v_ref, 31:1`
- Position
  - Actual position of motor
    `Status.p_act, 31:6`
  - Reference position
    `Status.p_ref, 31:5`
  - Actual position of profile generator
    `Status.p_profile, 31:31`
  - Target position of profile generator
    `Status.p_target, 31:30`
- Voltage
  - Voltage at DC bus
    `Status.UDC_act, 31:20`
- Current
  - Current of motor
    `Status.I_act, 31:12`
- Temperature
  - Power stage temperature
    `Status.TPA_act, 31:25`

0198441113556, V2.00, 09.2008

8.2 Control mode "Motion Sequence"

8.2.1 Overview

Basics

The control mode "Motion Sequence" is based on the basic principles and functions of the operating modes "Homing" and "Profile Position". The function principle is described in the individual chapters on the corresponding operating modes.

Description

In the control mode "Motion Sequence", the motor is controlled by means of data sets that can be programmed as required.

The drive parameters are set and the data sets are programmed with the commissioning software.

There are 2 processing modes for the data sets:

- Direct selection of the data sets

  Direct selection of the data sets is used if a master controller (e.g. PLC) is in charge of the time coordination between the various data sets. The number of the data set to be processed is selected directly via signal inputs. The activation of the selected data set is triggered by a signal. This way, all data sets can be selected directly.

- Sequential selection of the data sets

  Sequential selection of the data sets is typically used with simple processing sequences. The time coordination between the various data sets and their sequence is defined in the drive. The time coordination is programmed in the individual data sets by setting transition conditions and a subsequent data set. A rising edge at the signal input START is an example of such a transition condition. The data set with which the sequential selection of data sets is to start is specified via the signal inputs. The data set that is to follow in the sequence is defined within the data set.

The processing status of a data set can be output via the handshake output. In addition, an internal processing status such as "drive moving" can be output via an additional signal output.

The motion profile (speed and acceleration) for positioning and reference movements can be selected from a separate group of profile definitions. One of the defined profiles can be assigned to each data set.

0198441113556, V2.00, 09.2008

8.2.2 Selection of processing mode

The following processing modes can be selected with the parameter `Mode`:

- Direct selection of the data sets

  A binary-coded data set number is imported and enabled by a rising edge at the `START` signal input.

- Sequential selection of the data sets

  A binary-coded data set number is imported and enabled by an edge-controlled start signal (factory setting). This enables proximity mode, i.e. a data set is activated by a rising edge at the `START` signal input.

  Alternatively, a static start signal can be used.
  A data set is activated by a static level (0 or 1 level) at the `START` signal input. A running sequence can be stopped at the end of the current data set with the inverted level. As soon as the original level is pending, the sequence is continued with the next data set.

  The stepping condition that is applicable for the start of the first data set and stepping to all following data sets is specified with the parameter `DataSet.GlobCond`. The globally define stepping condition can be replaced by a special stepping condition in every single data set (see 8.2.6 "Structure of a data set").

0198441113556, V2.00, 09.2008

8.2.3 Global settings

The following global settings are available:

Parameter name	Value range / list	Description
DataSet.Mode	Direct selection of the data sets Sequential data set selection	Globally defined processing mode Globally defined processing modes are set in the "Motion Sequence Mode" window of the commissioning software.
DataSet.GlobCond	Rising edge (0->1) [1)] Falling edge (1->0) 1 level 0 level	Globally defined transition condition. This is used as a transition condition for the start of the first data set and for data sets that have GlobCond set as transition condition.
DataSet.AutoEnabl	No [1)] Yes	Automatic enabling of the power stage. Required if ENABLE signal input is not wired.
DataSet.FuncOUT_1 and DataSet.FuncOUT_2	Handshake Trigger output Drive referenced Power stage enabled Motor moving Limit switch tripped Selective error output	Function for FUNCT1_OUT or FUNCT2_OUT signal output.
DataSet.OutError	Undervoltage Overvoltage Motor overload Overtemperature Motor blocked STO ("Power Removal") triggered STO ("Power Removal") signals different Limit switch bounced Interruption LIMP Interruption LIMN Interruption STOP	Error number for selective error output. Number of the error during which the FUNCT1_OUT or FUNCT2_OUT signal output changes to 1 level.

1) factory setting

8.2.4 Description of signal outputs

The NO_FAULT_OUT signal output switches to 1 level if the internal state machine is in one of the following states:

4: Ready to switch on (power stage off, no error present)

5: Switch on (transition state)

6: Operation enable (power stage on, no error present)

Different functions can be assigned to the signal outputs FUNCT1_OUT and FUNCT2_OUT. The following functions can be selected:

Handshake Indicates the processing status and can be used as handshake signal for a master controller. The behavior of this signal output is described in detail for direct selection of the data sets in 8.2.8 "Processing mode "Direct selection of data sets"" and for sequential selection of the data sets in 8.2.9 "Processing mode "Sequential selection of data sets"".

0198441113556, V2.00, 09.2008

Trigger output

The corresponding signal output can be controlled directly by every data set. The behavior of the signal output at the start and the end of each data set can be defined for each data set. This function can be used to trigger or switch external actuators. This way, special handshake requests can be implemented.

This function is only available in the "sequential data set selection" processing mode, see page 104.

Drive referenced

The signal output switches to 1 level if the drive is referenced.

Power stage enabled

The signal output is 1 level as long as the power stage is enabled. See 8.1.5 "Operating states and state transitions".

Motor moving

The signal output is 1 level as long as the motor moves. As long as the delay time of a data set is running, the signal output is 0 level.

Limit switch tripped

The signal output switches to 1 level if a limit switch has been tripped. At the same time the `NO_FAULT_OUT` signal output switched to 0 level. The power stage remains enabled. The drive must be moved away from the switch, e.g. in the operating mode Jog. The next data set is only processed after a rising edge at the `START` signal input.

Selective error output

The signal output switches to 1 level if the drive has detected an error that can be parameterized in `DataSet.OutError`. In the case of an error, the `NO_FAULT_OUT` signal output switches to 0 level. The power stage is disabled depending on the error class.

8.2.5 Definition of the motion profiles

To facilitate setting the motion profiles, they can be defined in special profile groups. A profile of this group can be assigned to each data set. The advantage is that a change in a profile group can be used to change the processing profile of multiple data sets. The commissioning software is used for parameterization.

A profile can be selected from a group with "Profile"; a group consists of the following adjustable values:

- Reference speed of rotation or reference speed
- Acceleration ramp / deceleration ramp

Structure of profile groups

Profile	Speed (UINT16)	Acceleration (UINT32)
0 (factory setting)	Speed_0	Acc_0
1	Speed_1	Acc_1
2	Speed_2	Acc_2
3	Speed_3	Acc_3

0198441113556, V2.00, 09.2008

8.2.6 Structure of a data set

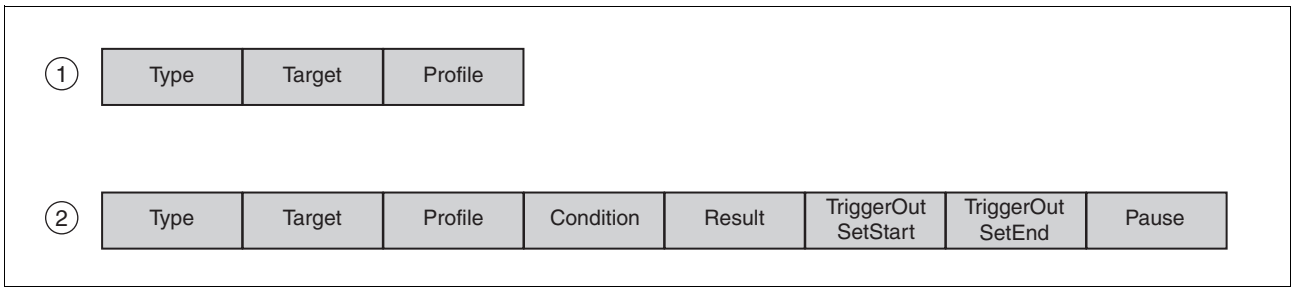

Figure 8.2 Structure of a data set

(1) Direct selection of data set
(2) Sequential data set selection

Type Selection of the data set type

The Target and Profile settings have the following different meanings depending on the selected data set type:

Type	Description
Pos. absolute	Absolute positioning see chapter 8.3.2 "Operating mode Profile position"
Pos. relative	Relative positioning see chapter 8.3.2 "Operating mode Profile position"
Ref. LIMP	Reference movement to the positive limit switch see chapter 8.3.3.2 "Reference movement to limit switch"
Ref. LIMN	Reference movement to negative limit switch see chapter 8.3.3.2 "Reference movement to limit switch"
Ref. Index pos.	Reference movement to index pulse with clockwise rotation see chapter 8.3.3.4 "Reference movement to index pulse"
Ref. Index neg.	Reference movement to index pulse with counterclockwise rotation see chapter 8.3.3.4 "Reference movement to index pulse"
Position setting	Position setting see chapter 8.3.3.5 "Position setting"

Target Corresponds to an absolute or relative position change, depending on the data set type. The position change is either entered in the Target Motor field in increments or in the Target Axis in the selected scaling unit.

Profile The desired motion profile is set here for the data set types "Pos. absolute" and "Pos. relative" and for "Ref. LIMP" and "Ref. LIMN". See chapter 8.2.5 "Definition of the motion profiles".

0198441113556, V2.00, 09.2008

Condition Defines the transition condition that must be met before the next data set is executed. The following settings are available for the parameter:

- Auto: The next data set is started immediately after the current data set.
- Rising edge: The `START` signal input is monitored and if a rising edge is detected, the condition is considered to be fulfilled.
- Falling edge: The `START` signal input is monitored and if a falling edge is detected, the condition is considered to be fulfilled.
- 0 level: The `START` signal input is monitored and if the level is 0, the condition is considered fulfilled.
- 1 level: The `START` signal input is monitored and if the level is 1, the condition is considered fulfilled.
- `DataSet.GlobCond`: Uses the global transition condition defined in the chapter 8.2.3 "Global settings".

Subsequent Defines the number of the data set that is to be executed next.

TriggerOut SetStart / SetEnd Each data set can control the `FUNCT1_OUT` and `FUNCT2_OUT` signal output at the start (SetStart) and also at the end of the data set including expiry of the waiting time (SetEnd) if the corresponding signal output is set to the "trigger output" function.

TriggerOutSet-Start	TriggerOutSe-tEnd	Description
Unchanged	Unchanged	Output level remains unchanged
1 level	1 level	Output level switches to 1 level
0 level	0 level	Output level switches to 0 level
Inverted	Inverted	Output level is inverted

Pause Define the waiting time after end of positioning. The value can be set from 0 to 65535 ms. The data set is considered ended only after this period.

0198441113556, V2.00, 09.2008

8.2.7 Switching on the drive

⚠ DANGER

UNEXPECTED MOVEMENT

With suitable parameterization the product can start movements automatically after application of the VDC power supply. An unexpected restart may occur after a power failure.

- Check the behavior of the system during application of the power supply.
- Make sure that no persons can be endangered by a restart of the system after a power failure.
- Make sure that there are no persons in the range of action of the moving system components.

Failure to follow these instructions will result in death or serious injury.

When the drive is switched on the input signals and settings are processed in the following sequence:

1. Enabling the power stage
If the parameter `AutoEnabl` is set to "yes", the power stage is enabled automatically independently of the `ENABLE` signal input.

2. Selection of the data sets
The data set applied to the signal inputs is used.

3. Start
The signal input `START` is processed under consideration of the setting `GlobCond`. See chapter 8.2.3 "Global settings".

If a static level is set in the parameter `DataSet.GlobCond` and this level is available at the signal input `START`, the selected data set is started. A movement can be started automatically by this sequence with suitable parameterization when the product is switched on.

0198441113556, V2.00, 09.2008

8.2.8 Processing mode "Direct selection of data sets"

The specified data set is processed if a rising edge is available at the START signal input. The processing status can be returned with the handshake function.

Operation with master controller

The timing of the process is controlled by I/O signals of a master controller, e.g. a PLC. The current processing status of the drive can be determined via suitable return signals. The signals are exchanged in handshake mode.

Handshake

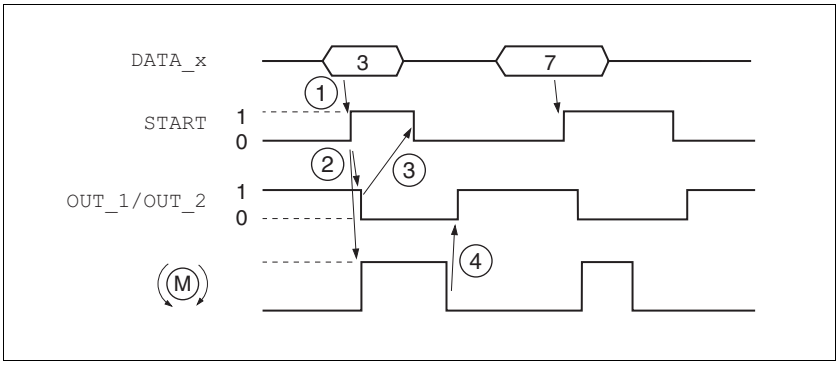

Figure 8.3 Handshake with direct selection of data sets

(1) **PLC:** Data set number applied at the signal inputs and 1 level at the START signal input.

(2) **Product**: rising edge at the signal input START starts positioning. At the same time, the handshake signal is set to 0.

(3) **PLC**: After detection of activation of the data set via the handshake signal, the START signal can be disabled again.

(4) **Product**: The end of the positioning process is signaled to the PLC by a 1 level of the handshake signal. (a 0 level must be available at the START signal input)

The handshake signal checks the function "motor moving" internally. If it is at 0 level and the start signal is also inactive, the handshake signal is set to 1 level and the cycle is signaled as being complete. This results in a synchronization with the speed of the master controller. The second positioning job shown is a short positioning that is completed faster than the cycle time of the master PLC. Processing the input signal START allows the PLC to detect the activation of the data set (0 level of the handshake signal).

The signal for the selection of the data set must be stable at the point in time the data set is selected so that the correct data set number is used.

0198441113556, V2.00, 09.2008

Example For control via a PLC, the data sets in the controller are to do the following:

- **Data set 0**: Reference movement to the negative limit switch, profile 0
- **Data set 1**: Absolute positioning to 1000 usr, profile 1
- **Data set 2**: Absolute positioning to 5000 usr, profile 2
- **Data set 3:** Relative positioning by -1000 usr, profile 3
- **Data set 4:** Relative positioning by 1000 usr, profile 3

Settings The following settings are made in the commissioning software:

Processing mode

direct

Data sets

No	Type	Target Motor		Target Value		Profile
0	REF movement on LIt					0
1	Absolute positioning	2000000	inc	1000,000	mm	1
2	Absolute positioning	10000000	inc	5000,000	mm	2
3	Relative positioning	-2000000	inc	-1000,000	mm	2
4	Relative positioning	2000000	inc	1000,000	mm	3
5	None					
6	None					
7	None					
8	None					
9	None					
10	None					
11	None					
12	None					
13	None					
14	None					
15	None					

Rounded target axis positions are blue colored.

Figure 8.4 Example of direct selection of the data sets

0198441113556, V2.00, 09.2008

8.2.9 Processing mode "Sequential selection of data sets"

The processing sequence is determined by parameterization of the data sets. The signal input START allows for special coordination of the sequential processing. A global definition (e.g. rising edge at the START signal input) is available to achieve this. In addition, the transition condition to the next data set can be individually set in each data set.

Operation without external controller, minimized external circuitry

The specified positioning jobs including waiting time are processed sequentially. The transition conditions between the data sets can be tuned to the requirements of the application. The user can specify whether each individual data set is to be started separately with a start request or whether a number of data sets are to be processed by one start command.

If multiple data sets are activated one after the other by the same start command, the processing of the sequence can be stopped, e.g. by means of the start switch. This is possible if a static level was set as the transition condition, e.g. NextCondition = 1 level. If the sequence is stopped, the currently running data set is completed. When the transition condition is met again, the next data set in the sequence is processed.

The number of the data set number to be started can also be set via the DATA_1 to DATA_8 signal inputs. The setting is activated when the power stage is enabled.

After activation of the power stage the DATA_8 signal becomes the SEL_DATA signal. The number of the data set can be changed as soon as a transition condition is pending to be met. A data set is set via the DATA_1 to DATA_4 signal inputs for this. The first 8 data sets can be selected. A rising edge at SEL_DATA confirms the applied data set. After a rising edge at the START signal input the sequence is continued with this data set.

Sample application

After enabling of the power stage, the following steps are to be performed:

0198441113556, V2.00, 09.2008

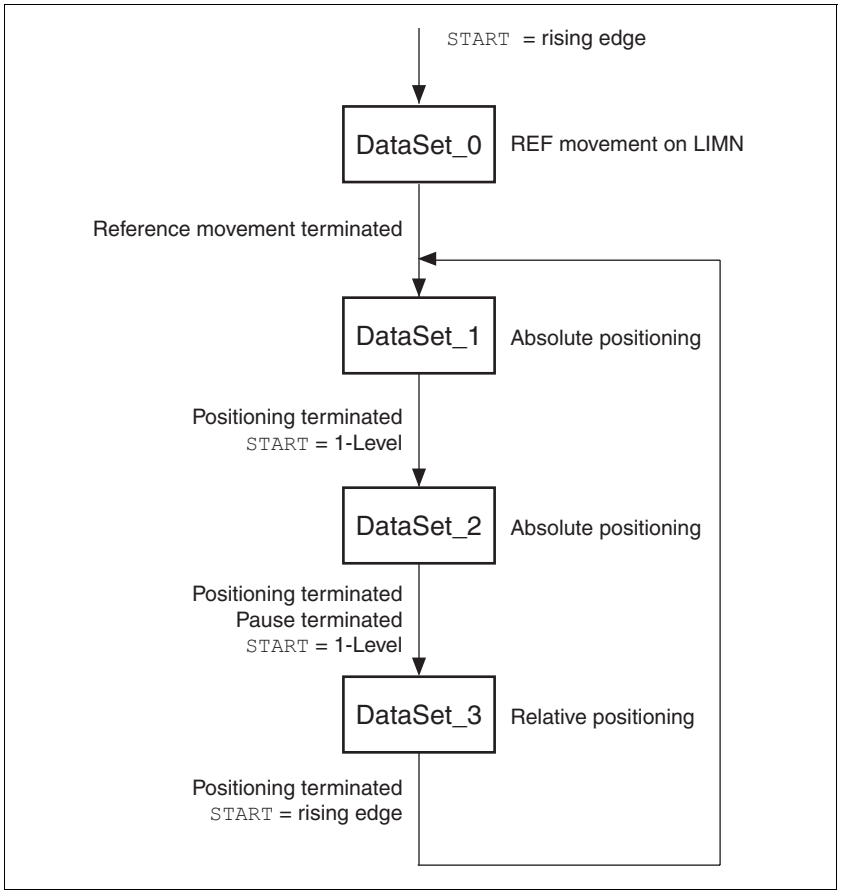

Figure 8.5 Processing principle for sequential data sets

- **Data set 0:** Reference movement to negative limit switch, profile selection = 0, next data set = data set 1, continue processing directly with next data set (data set 1).
- **Data set 1:** Absolute positioning to 200000 inc, profile selection = 1, no waiting time, next data set = data set 2, continue processing directly with next data set if START signal input is still 1
- **Data set 2:** Absolute positioning to 1000000 inc, profile selection = 2, then waiting time 2000 ms, next data set = data set 3, continue processing directly with next data set if START signal input is still 1
- **Data set 3:** Relative positioning by –400000 inc, profile selection = 3, no waiting time, next data set = data set 1, continue processing with next data set if the rising edge parameterized in parameter GLOBCOND is available at START.

  During the positioning the trigger output FUNCT2_OUT is to switch to 1 level.

The global definition for the processing mode is "sequential selection of data sets with jog mode", i.e. the transition condition between the data sets is a rising edge at the START signal input.

The signal inputs DATA_1 to DATA_4 all have 0 level, i.e. the start data set to be used is data set 0.

The function for the FUNCT2_OUT signal output is "TriggerOutput".

0198441113556, V2.00, 09.2008

Settings The following settings are made in the commissioning software:

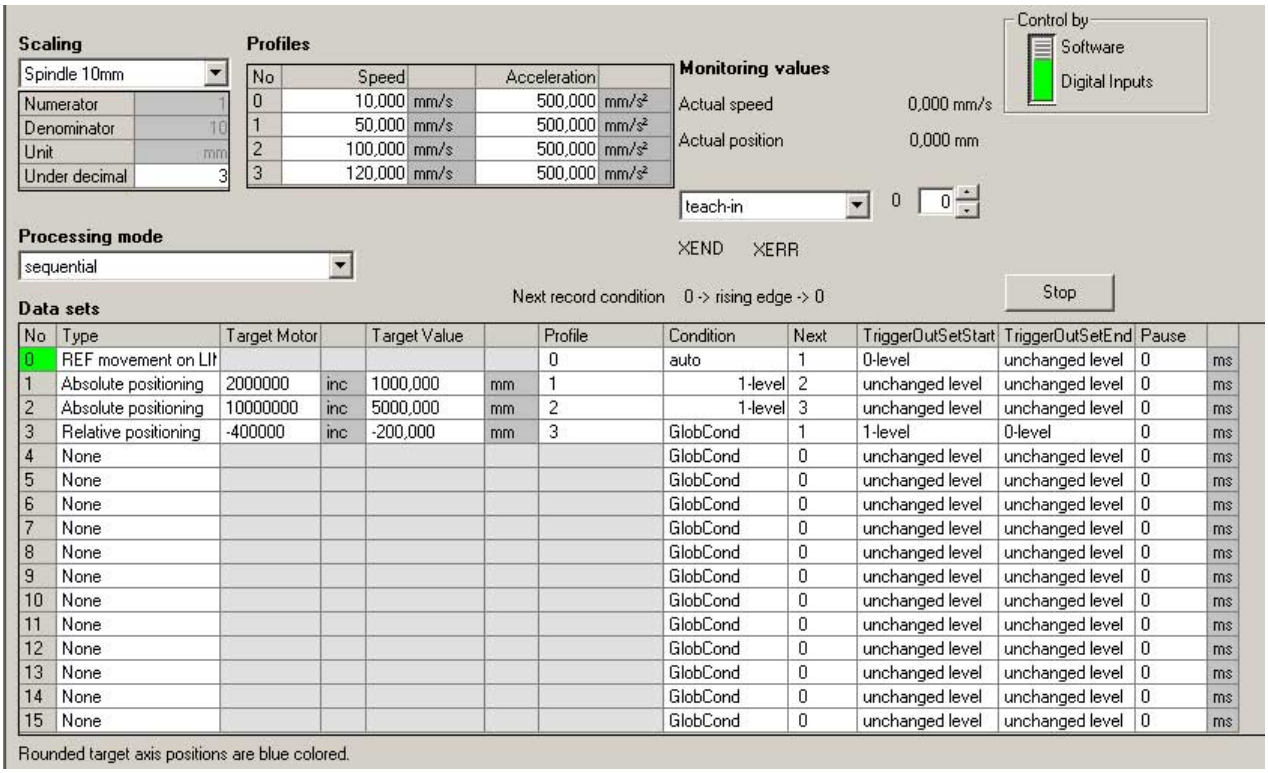

Scaling

Spindle 10mm

Numerator	1
Denominator	10
Unit	mm
Under decimal	3

Profiles

No	Speed		Acceleration	
0	10,000	mm/s	500,000	mm/s²
1	50,000	mm/s	500,000	mm/s²
2	100,000	mm/s	500,000	mm/s²
3	120,000	mm/s	500,000	mm/s²

Monitoring values

Actual speed 0,000 mm/s

Actual position 0,000 mm

teach-in 0 0

XEND XERR

Control by: Software / Digital Inputs

Processing mode

sequential

Next record condition 0 -> rising edge -> 0

Stop

Data sets

No	Type	Target Motor		Target Value		Profile	Condition	Next	TriggerOutSetStart	TriggerOutSetEnd	Pause	
0	REF movement on LIt					0	auto	1	0-level	unchanged level	0	ms
1	Absolute positioning	2000000	inc	1000,000	mm	1	1-level	2	unchanged level	unchanged level	0	ms
2	Absolute positioning	10000000	inc	5000,000	mm	2	1-level	3	unchanged level	unchanged level	0	ms
3	Relative positioning	-400000	inc	-200,000	mm	3	GlobCond	1	1-level	0-level	0	ms
4	None						GlobCond	0	unchanged level	unchanged level	0	ms
5	None						GlobCond	0	unchanged level	unchanged level	0	ms
6	None						GlobCond	0	unchanged level	unchanged level	0	ms
7	None						GlobCond	0	unchanged level	unchanged level	0	ms
8	None						GlobCond	0	unchanged level	unchanged level	0	ms
9	None						GlobCond	0	unchanged level	unchanged level	0	ms
10	None						GlobCond	0	unchanged level	unchanged level	0	ms
11	None						GlobCond	0	unchanged level	unchanged level	0	ms
12	None						GlobCond	0	unchanged level	unchanged level	0	ms
13	None						GlobCond	0	unchanged level	unchanged level	0	ms
14	None						GlobCond	0	unchanged level	unchanged level	0	ms
15	None						GlobCond	0	unchanged level	unchanged level	0	ms

Rounded target axis positions are blue colored.

Figure 8.6 Example of sequential selection of the data sets

Processing principle

(1) Signal input START rising edge
(2) Reference movement complete
(3) Positioning complete AND signal input START = 1
(4) Positioning completed AND DelayTime passed AND signal input START = 1
(5) Positioning complete AND START signal input rising edge

The data sets are processed sequentially. The specified data set is selected after the power stage is enabled. Processing of the data set is started by a rising edge at the START signal input (unless specific conditions are defined in the various data sets). End of processing is signaled by an acknowledgement signal.

A handshake signal for processing can be set via the FUNCT1_OUT or FUNCT2_OUT signal. This signal is set to 0 at the start of a data set and reset to 1 on completion of the data set. If a direct transition to a subsequent data set is possible, the signal remains at 0 level and only becomes 1 if the transition condition is not met after processing a data set.

0198441113556, V2.00, 09.2008

Handshake

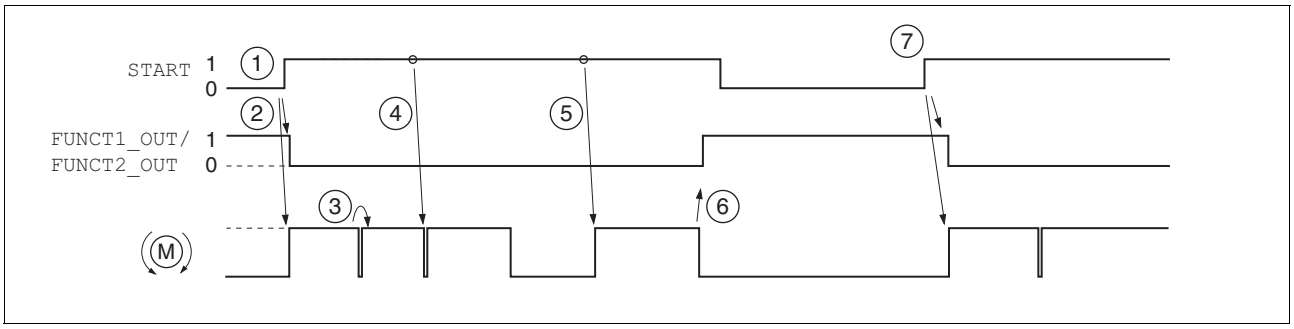

Figure 8.7 Handshake with the sequential processing mode

(1) The rising edge at the START signal input activates the first data set (0 in this case). This data was already selected when the power stage was enabled.

(2) Processing of the selected data set is started; at the same time, the handshake signal is set to 0.

(3) Transition from reference movement to data set 1 takes place immediately after the end of the reference movement.

(4) Transition from data set 1 to data set 2 takes place immediately because the transition condition START=1 is met.

(5) Transition after the waiting time from data set 2 to data set 3 after takes place immediately because transition condition START =1 is met.

(6) After completion of data set 3, a rising edge at the START signal input is expected for continued processing. The completion of a processing sequence is signaled by a 1 level of the handshake signal.

(7) The rising edge at the START signal input activates the data set 1 registered under "Next Condition" again.

For example, if START = 1 level is always set as the transition condition between the individual data sets, continuous processing can be implemented by assignment of a switch to the START signal input. If the START input signal is set to 0 during processing of a data set, the currently active data set is completed; then the system waits until the signal is activated again. This can be used to interrupt a process briefly for manual intervention.

0198441113556, V2.00, 09.2008

8.2.10 Characteristics of the drive

Signal inputs for "Jog"

The default functions for the signal inputs `IO2` and `IO3` are "Jog pos." and "Jog neg.".

The drive can be manually move in positive or negative direction with these signal inputs.

The speed can be parameterized.

The power stage is automatically enabled when the operating mode Jog is started and disabled once this operating mode is terminated. If the power stage was enabled when the operating mode Jog was started, it remains enabled once this operating mode is terminated.

Jog movements are only possible if no data set is active.

If one of the signal inputs is activated, no data set can be started.

If both signal inputs (for positive jog and negative jog) are active, the signal input that was changed last is dominant.

If jog is started at the same time by the commissioning software and by the signal inputs, the last selected direction of movement also dominates. A falling edge is also interpreted as a change.

0198441113556, V2.00, 09.2008

8.3 Operating modes

8.3.1 Operating mode Jog

⚠ WARNING

UNINTENDED OPERATION

- Note that any changes to the values of these parameters are executed by the drive controller immediately on receipt of the data set.
- Verify that the system is free and ready for movement before changing these parameters.

Failure to follow these instructions can result in death, serious injury or equipment damage.

Description

Jog movements represent "classical jogging". The motor is moved over a selected distance by start signals. If the start signal is applied for a longer period of time, the motor switches to continuous movement.

The operating mode can be started via:

- Commissioning software
- Inputs of the signal interface if the signal interface is configured with the "programmable inputs" function.

The `I02` and `I03` signal inputs are pre-configured for slow jog.

Operation with commissioning software

The commissioning software supports this operating mode with special dialog boxes and menus.

Starting the operating mode

The motor can be moved in both directions at two speeds. Jog movements are started with the `Manual.startMan` parameter. The current axis position is the start position for jog movements. The values for position and speed are specified via the corresponding parameters.

Jog is finished when the motor has come to a standstill

- the direction signal is inactive,
- the operating mode was interrupted by an error response.

The `Manual.statusMan` parameter provides information on the processing status.

0198441113556, V2.00, 09.2008

Classical jog

Triggered by the start signal for jog, the motor first moves over a defined distance `Manual.step_Man`. If the start signal is still available after a specific delay time `Manual.time_Man`, the controller switches to continuous movement.

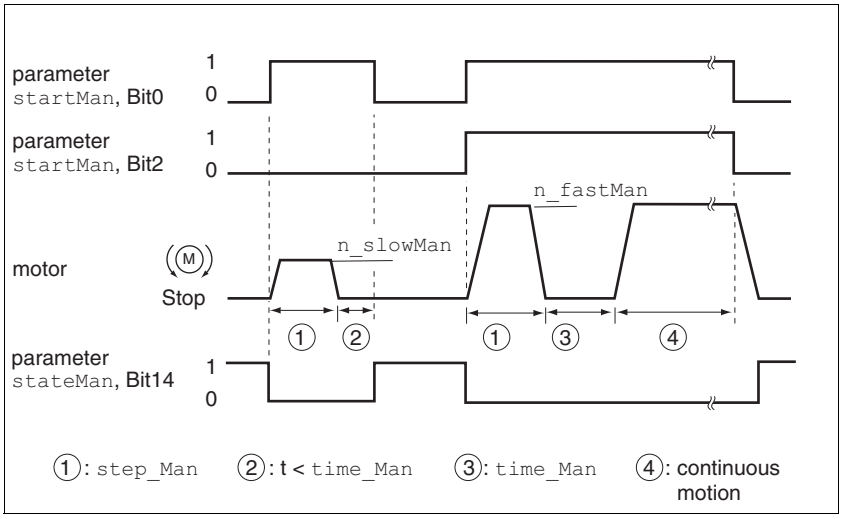

Figure 8.8 Classical jog, slow and fast

Jog distance, waiting time and jog speeds are adjustable. If the jog distance is zero, the jog movement starts directly as a continuous movement, irrespective of the waiting time.

Moving away from limit switch range

The drive can be moved away out of the limit switch range to a valid movement range at any time by means of a jog movement.

If the positive limit switch signal $\overline{\texttt{LIMP}}$ was activated, the jog movement must be in negative direction; in the case of $\overline{\texttt{LIMN}}$, the movement must be in positive direction. If the motor does not move away, verify that you have selected the correct direction for the jog movement.

0198441113556, V2.00, 09.2008

8.3.2 Operating mode Profile position

⚠ WARNING

UNINTENDED OPERATION

- Note that any changes to the values of these parameters are executed by the drive controller immediately on receipt of the data set.
- Verify that the system is free and ready for movement before changing these parameters.

Failure to follow these instructions can result in death, serious injury or equipment damage.

In Profile Position operating mode, a movement with an adjustable motion profile is performed from a start position to a target position. The value of the target position can be specified as either a relative or an absolute position.

You can set a motion profile with values for acceleration ramp, deceleration ramp and target speed.

Settings

The positioning path can be entered in 2 ways:

- Absolute positioning, reference point is the zero point.
- Relative positioning, reference point is the current reference position of the motor (parameter `Status.p_ref, 31:5`).

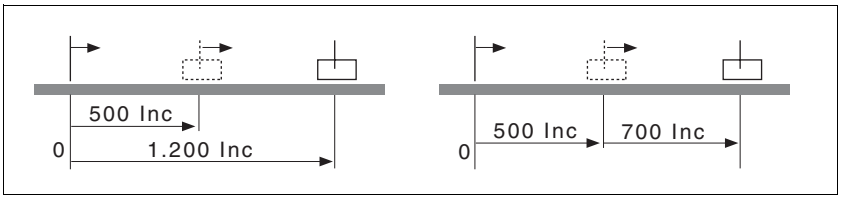

Figure 8.9 Absolute positioning (left) and relative positioning (right)

Starting the operating mode

As soon as a target position is transmitted in the parameters `PTP.p_absPTP, 35:1` or `PTP.p_relPTP, 35:3`, the drive switches to the Profile Position operating mode and starts positioning at the target speed of rotation specified with parameter `PTP.v_tarPTP, 35:5`.

Start absolute positioning

Procedure for starting absolute positioning:

▶ Set the target speed of rotation with the parameter `PTP.v_tarPTP, 35:5`.

▶ Start absolute positioning by specifying the absolute target position in parameter `PTP.p_absPTP, 35:1`.

Absolute positioning cannot be started after a position overrun, because the absolute position reference is lost during the position overrun.

A position overrun is indicated in parameter `Status.WarnSig, 28:10`, bit 0 . In addition, bit 5 (ref_ok) in parameter `Status.xMode_act, 28:3` is reset.

0198441113556, V2.00, 09.2008

Starting relative positioning

Procedure for starting relative positioning:

▶ Set the target speed of rotation with the parameter `PTP.v_tarPTP, 35:5`.

▶ Start relative positioning by specifying the relative target position in parameter `PTP.p_relPTP, 35:3`.

Continuing the operating mode

If a positioning process is interrupted by, for example, an external stop signal, the process can be continued via a write access to the parameter `PTP.continue, 35:4` so it can be completed. Before you can continue, you must remedy the problem that caused the interruption and execute a "Fault-Reset". The value transmitted with `PTP.continue, 35:4` is not evaluated.

Monitoring the operating mode

The parameter `PTP.statePTP, 35:2` lets you get the processing status.

- Target position reached and operating mode ended. Not signalled if movement was interrupted. (Bit 13)
- Operating mode terminated (bit 14)
- Error (bit 15)

Terminating the operating mode

Conditions that terminate the operating mode:

- Target position reached, motor at standstill

  (Parameter `PTP.statePTP, 35:2`, bit 14)

- In the case of an error the drive is stopped. This is indicated by parameter `PTP.statePTP, 35:2`, bit 15.
- Fieldbus command "Quick Stop"

  (writing of value 4 to parameter `Commands.driveCtrl, 28:1`)

  The drive comes to a stop with "Quick Stop".

0198441113556, V2.00, 09.2008

8.3.3 Operating mode Homing

⚠ WARNING

UNINTENDED OPERATION

- Note that any changes to the values of these parameters are executed by the drive controller immediately on receipt of the data set.
- Verify that the system is free and ready for movement before changing these parameters.

Failure to follow these instructions can result in death, serious injury or equipment damage.

8.3.3.1 Overview

Overview of Homing

The operating mode Homing establishes an absolute position reference between the motor position and a defined axis position. Homing can be carried out by a means of a reference movement or by position setting.

- A reference movement is a movement to a defined point, the reference point, on the axis; the objective is to establish the absolute position reference between the motor position and the axis position. The reference point also defines the zero point that is used for all subsequent absolute positionings as a reference point. It is possible to parameterize a shift of the zero point.

  A reference movement must be completed for the new zero point to be valid. If the reference movement is interrupted, it must be. As opposed to the other operating modes, a reference movement must be completed before you can switch to a new operating mode.

  The signals required for the reference movement must be wired. Monitoring signals that are not used must be deactivated.

- Position setting lets you set the current motor position to a desired position value to which the subsequent position specifications will relate.

There are 6 standard types of reference movements:

- Movement to negative limit switch $\overline{\texttt{LIMN}}$
- Movement to positive limit switch $\overline{\texttt{LIMP}}$
- Movement to reference switch $\overline{\texttt{REF}}$ with counterclockwise direction of rotation
- Movement to reference switch $\overline{\texttt{REF}}$ with clockwise direction of rotation
- Movement to index pulse with counterclockwise direction of rotation
- Movement to index pulse with clockwise direction of rotation

Monitoring reference movements

The parameter `Homing.stateHome, 40:2` lets you get information on the processing status.

The parameter `Status.xMode_act, 28:3`, bit 5, is set if the reference movement was successful.

0198441113556, V2.00, 09.2008

Terminating a reference movement

Conditions that terminate the reference movement:

- The motor has reached the target position and is at a standstill.
- Error response
- "Quick Stop" via fieldbus command

When the power stage is disabled, the valid reference point is retained.

8.3.3.2 Reference movement to limit switch

The following illustration shows a reference movement to the negative limit switch with distance from the switching edge (`Homing.startHome, 40:1` = 2).

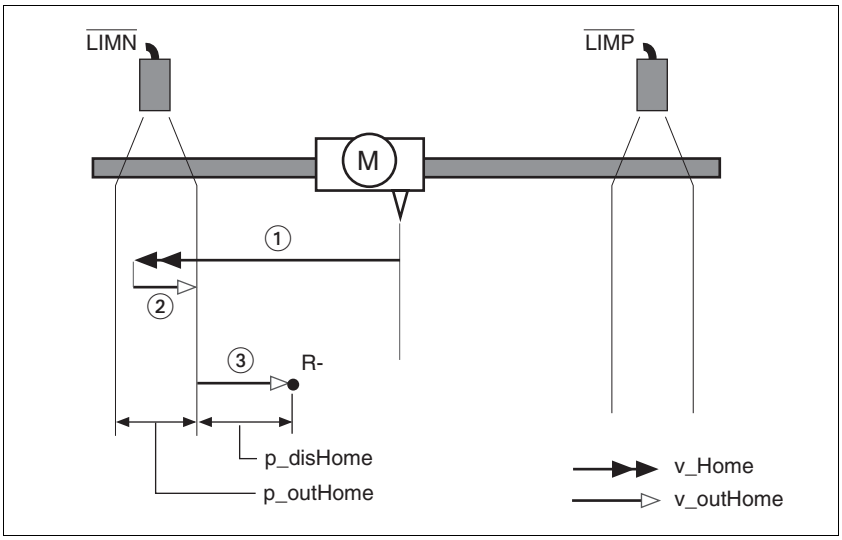

Figure 8.10 Reference movement to the negative limit switch

(1) Movement to limit switch
(2) Movement to switching edge
(3) Movement to distance from switching edge

Starting the reference movement

Procedure:

▶ Set the speed of rotation for the search for the switch (parameter `Homing.v_Home, 40:4`)

▶ Set the speed of rotation for moving away from the switch. (parameter `Homing.v_outHome, 40:5`).

▶ Set the distance from the switching edge. (parameter `Homing.p_disHome, 40:7`).

▶ Start the reference movement to the desired limit switch. (parameter `Homing.startHome, 40:1` = 1 or 2)

0198441113556, V2.00, 09.2008

8.3.3.3 Reference movement to reference switch

A reference movement to the reference switch does not require the reference switch to be enabled. The signal level can be inverted with the parameter `Settings.SignLevel, 28:14`.

The following illustration shows reference movements to the reference switch with distance from the switching edge (`Homing.startHome, 40:1` =3).

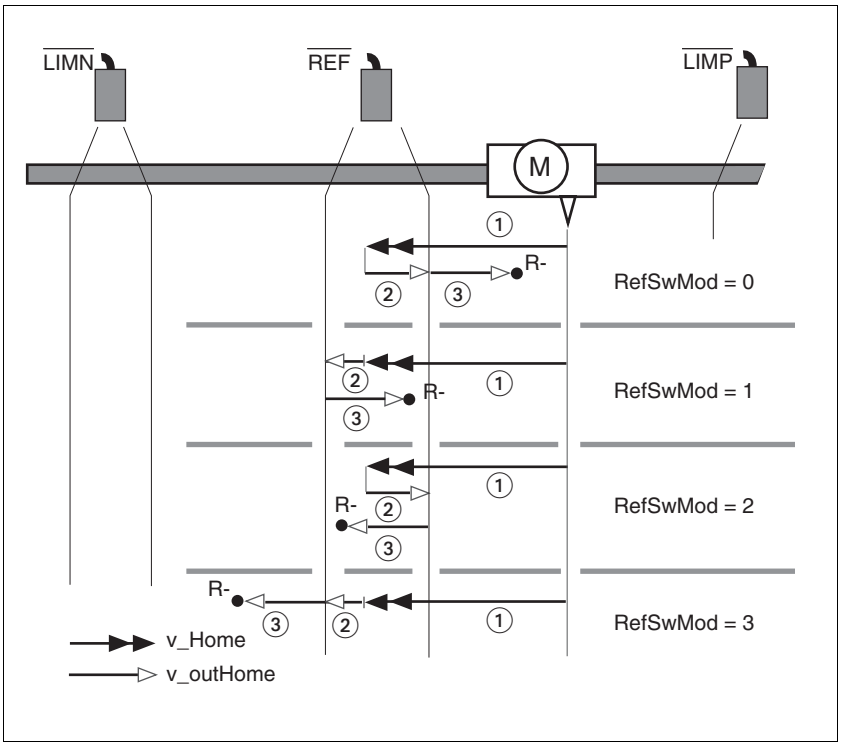

Figure 8.11 Reference movement to reference switch

(1) Movement to limit switch
(2) Movement to switching edge
(3) Movement to distance from switching edge

If a reference movement was started with the wrong direction of rotation, the motor stops at the limit switch. The reference movement is interrupted and must be restarted with the correct direction of rotation.

Starting the reference movement

Procedure:

- Set the speed of rotation for the search for the switch (parameter `Homing.v_Home, 40:4`).
- Set the speed of rotation for moving away from the switch. (parameter `Homing.v_outHome, 40:5`)
- Set the directions. (parameter `Homing.RefSwMod, 40:9`)
- Set the distance from the switching edge. (parameter `Homing.p_disHome, 40:7`)
- Start the reference movement to the reference switch with movement at counterclockwise direction of rotation. (parameter `Homing.startHome, 40:1` = 3 or 4)

0198441113556, V2.00, 09.2008

8.3.3.4 Reference movement to index pulse

The index pulse is a fixed range of approx. 1/16 revolution on the shaft that delivers one pulse per revolution at the same angular position.

A reference movement to the index pulse can be used to arrive at an exact absolute reference from an inexact absolute reference (e.g. after a reference movement to a switch that does not respond accurately).

During a reference movement to the index pulse, the drive searches for the index pulse within the next motor revolution and moves exactly to the edge of the index pulse.

Reproducibility

In view of reproducibility, keep the motor from being in the vicinity of the index pulse prior to a movement to avoid the effects of position tolerances. On completion of the reference movement verify this as follows:

The distance between the start position and the edge of the index pulse is stored in the parameter `Homing.p_diffind, 40:12`.

If the determined value of `Homing.p_diffind, 40:12` is between approx. 2000 and 18000 increments, corresponding to 10% or 90% of a motor revolution, the reference movement is reproducible.

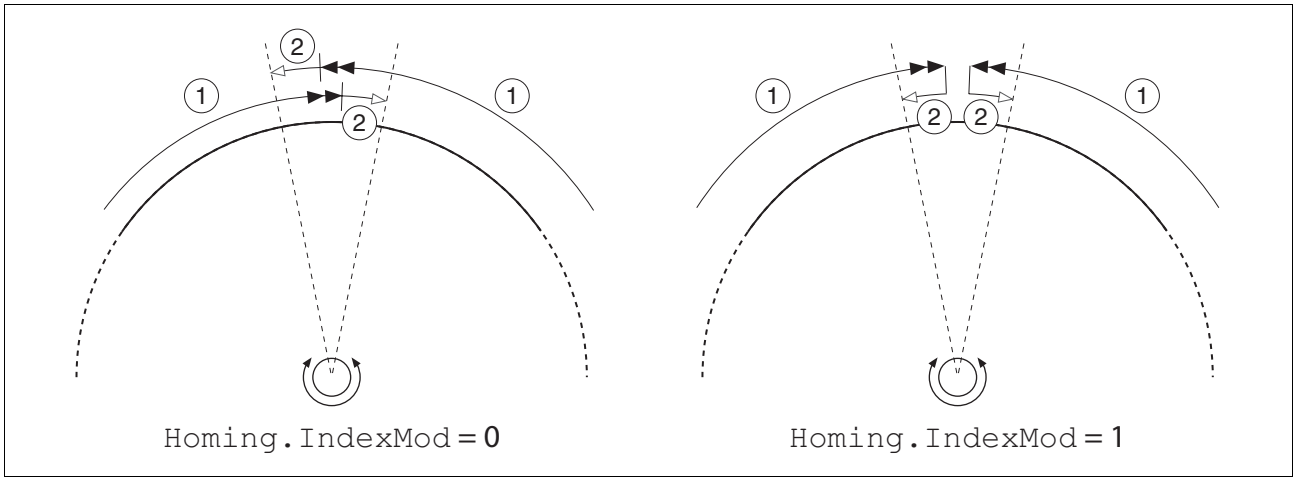

Figure 8.12 Reference movement to index pulse

(1) Movement to index pulse
(2) Movement to edge of index pulse

Starting the reference movement

Procedure:

- ▶ Set the speed of rotation for the search for the switch (parameter `Homing.v_Home, 40:4`).
- ▶ Set the speed of rotation for moving away from the switch. (parameter `Homing.v_outHome, 40:5`)
- ▶ Set the direction of movement. (parameter `Homing.IndexMod, 40:10`)
- ▶ Start the reference movement to the index pulse with movement at the desired direction of rotation (parameter `Homing.startHome, 40:1` = 5 or 6)

0198441113556, V2.00, 09.2008

8.3.3.5 Position setting

Position setting defines an absolute position reference depending on the current motor position.

The position value is delivered in increments in the parameter-`Homing.startSetP, 40:3`.

Position setting is only possible when the motor is at a standstill.

Example Position setting can be used to carry out a continuous motor movement without exceeding the positioning limits.

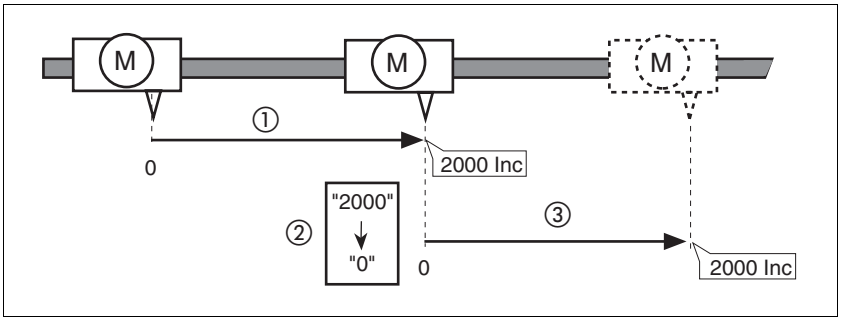

Figure 8.13 Positioning by 4000 increments with position setting

(1) The motor is positioned by 2000 inc.
(2) By means of position setting to 0, the current motor position is set to position value 0 which, at the same time, defines a new zero point.
(3) When a new motion command by 2000 inc is triggered, the new target position is 2000 inc.

This method avoids overtravel of the absolute position limits during a positioning operation because the zero point is continuously adjusted.

Starting position setting Procedure:

▶ Write the new position setting position.
(parameter `Homing.startSetP, 40:3`)

The command is executed immediately and the operating mode is ended.

Monitoring position setting The parameter `Homing.stateHome, 40:2` lets you get information on the processing status.

The parameter `Status.xMode_act, 28:3`, bit 5, is set if position setting was successful.

Terminating position setting The operating mode is terminated immediately upon completion.

0198441113556, V2.00, 09.2008

8.4 Functions

8.4.1 Definition of the direction of rotation

The direction of rotation can be inverted.

The direction of rotation should be defined only once when you commission the product. The definition of the direction of rotation is not intended to reverse the direction of rotation during operation.

Group.Name Index:Subindex dec. (hex.)	Description Bit assgnment	Data type range dec.	Unit Default dec.	R/W per.
Motion.invertDir 28:6 (1C:06$_h$)	Definition of direction of rotation Value 0: Clockwise direction of rotation With positive reference values, the motor rotates clockwise (as you look at the end of the protruding motor shaft). Value 1: Counterclockwise direction of rotation With positive reference values, the motor rotates counterclockwise (as you look at the end of the protruding motor shaft). NOTE: The new value is only activated when the drive is switched on.	UINT16 0..1	- 0	R/W per.

8.4.2 Motion profile

Profile generator

Target position and target speed of rotation are input values to be specified by the user. The profile generator uses these values to calculate a motion profile depending on the selected operating mode.

The following properties can be set for the motion profile:

- Symmetrical and linear acceleration ramp.
- Change of speed of rotation and position during movements.
- Acceleration parameters min^{-1}/s.

  Value range 1 ... 765000 min^{-1}/s.

  Internal resolution approx. 12 min^{-1}/s.
- Speed values in min^{-1}.

  Value range 1 ... 3000 min^{-1}.

  Resolution 1 min^{-1}.
- Position values in increments (inc).

  Value range -2^{31} ... $+2^{31}-1$ inc.

  With reference to the motor output shaft, the drive has a resolution of 20000 inc/rev.

0198441113556, V2.00, 09.2008

Group.Name Index:Subindex dec. (hex.)	Description Bit assgnment	Data type range dec.	Unit Default dec.	R/W per.
Motion.dec_Stop 28:21 (1C:15_h)	Deceleration for "Quick Stop" Deceleration that is used for every "Quick Stop": - "Quick Stop" via control word - "Quick Stop" via external monitoring signal - "Quick Stop" via error of classes 1 and 2	UINT32 1...765000	min^{-1}/s 6000	R/W per.
Motion.acc 29:26 (1D:$1A_h$)	Acceleration Value determines acceleration and deceleration. New values do not become effective until after standstill.	UINT32 1...765000	min^{-1}/s 600	R/W per.

8.4.3 Quick Stop

"Quick Stop" is a quick brake function which stops the motor as a result of a fault of error classes 1 and 2 or as a result of a software stop.

In the event of an error response to an error of error class 1, the power stage remains enabled. In the case of error class 2, the power stage is disabled after the drive has come to a standstill.

Events that trigger a "Quick Stop":

- Input signal STOP

  (parameter `Status.Sign_SR`, bit 2)

- Limit switch overtraveled

  (parameter `Status.Sign_SR`, bit 0 and bit 1)

- Error of error classes 1 or 2
- "Quick Stop" triggered via a fieldbus command

  (parameter `Commands.driveCtrl, 28:1`, Bit 2)

Settings

In the following operating modes, motor deceleration is controlled via a profile. The deceleration can be set with the parameter `Motion.dec_Stop, 28:21`.

- Profile Velocity
- Profile Position
- Homing
- Jog

The drive absorbs excess braking energy during a "Quick Stop". If the DC bus voltage exceeds the permissible limit value, the drive disables the power stage and signals an "overvoltage error". The motor then coasts down without any braking force.

Procedure if the drive repeatedly switches off with an "Overvoltage" error during "Quick Stop".

▶ Reduce the deceleration or the maximum current for stop via the torque ramp.

▶ Reduce the drive load

0198441113556, V2.00, 09.2008

Acknowleding a Quick Stop

Procedure after an error or a "Quick Stop" executed by a fieldbus command:

▶ Reset the error.

(parameter `Commands.driveCtrl, 28:1`, Bit 3)

Procedure after a "STOP" signal:

▶ Reset the "STOP" signal at the signal input.

▶ Reset the error.

(parameter `Commands.driveCtrl, 28:1`, Bit 3)

Procedure after a "Quick Stop" via the limit switch signals $\overline{\texttt{LIMN}}$ and $\overline{\texttt{LIMP}}$:

▶ Move the motor out of the limit switch range.

(For more information see chapter 8.1.2 "External monitoring signals".)

More information

For more information see Chapter 8.1.5 "Operating states and state transitions" and Chapter 6 "Installation".

8.4.4 Programmable inputs and outputs

If a 24V signal is configured as a "programmable input or output", the drive automatically accesses this signal input or output.

This can be set for each of the 4 signals with the parameters `IO.IO0_def` to `IO.IO3_def`.

Programmable input

If a signal is configured as a programmable input, the drive monitors this signal continuously and accesses parameters independently whenever it a change of edge is detected. The parameter accesses can be parameterized as follows:

- Evaluation of rising and falling edges
- Parameter to be influenced by specification of index and subindex
- Write value for parameter with rising edge
- Write value for parameter with falling edge
- Bit mask for writing the object

Structure of the parameter access:

- Rising or falling edge detected
- Parameter is read
- Result of AND operation with bit mask
- Result of OR operation with write value for parameter with rising and falling edge
- Write result to parameter

0198441113556, V2.00, 09.2008

Shown as pseudo code:

- Rising edge -> object_WriteValue = (object_ReadValue AND bit-mask) OR WriteValue_pos
- Falling edge -> object_WriteValue = (object_ReadValue AND bit-mask) OR WriteValue_neg

Special case if bit mask = 0:

- Rising edge -> object_WriteValue= WriteValue_pos
- Falling edge -> object_WriteValue= WriteValue_neg

Programmable output

If a signal is defined as a programmable output, the drive accesses (read) parameters cyclically and sets the signal level in accordance with the read value. The accesses can be parameterized with the following parameters:

- Selection of the parameter to be read by specification of index and sub-index
- Comparison value for 1 level at output
- Comparison operator: equal, not equal, less than, greater than
- Bit mask for the comparison

Structure of the parameter access:

- Parameter is read
- Result of AND operation with bit mask
- Compare result with comparison value
- Depending on result, set output to HIGH or LOW

Shown as pseudo code:

IF (object_ReadValue AND bit mask) <comparison_operator> comparison_value THEN set output=1

ELSE set output=0

Group.Name Index:Subindex dec. (hex.)	Description Bit assgnment	Data type range dec.	Unit Default dec.	R/W per.
ProgIO0.Index 800:1 (320:01$_h$)	Index of the control parameter If prog. input: index of parameter to be written If prog. output: index of parameter to be read If prog. input: write(Index,Subindex) = (read(Index,Subindex) BAND BitMask) BOR VALUEx If prog. output: 1 level at output if (read(Index,Subindex) BAND BitMask) =<> VALUE1	UINT16	- -	R/W per.
ProgIO0.Subindex 800:2 (320:02$_h$)	Subindex of control parameter If prog. input: subindex of parameter to be written If prog. output: subindex of parameter to be read	UINT16	- -	R/W per.

0198441113556, V2.00, 09.2008

Group.Name Index:Subindex dec. (hex.)	Description Bit assgnment	Data type range dec.	Unit Default dec.	R/W per.
ProgIO0.BitMask 800:3 (320:03$_h$)	Bitmask for the parameter value If programmable input or programmable output: Bit mask used to link the read value (index, subindex) of the parameter with the operator AND before the value is processed.	UINT32	- -	R/W per.
ProgIO0.Switch 800:4 (320:04$_h$)	Edge detection and comparison operator If programmable input: Selection of the edges to be detected Value 0: No response to level change Value 1: Response to rising edge Value 2: Response to falling edge Value 3: Response to both edges If programmable output: Selection of condition for comparison: Value 0: (parameter read value = comparison value) Value 1: (parameter read value <> comparison value) Value 2: (parameter read value < comparison value) Value 0: (parameter read value > comparison value)	UINT16	- -	R/W per.
ProgIO0.Value1 800:5 (320:05$_h$)	Write Write value at rising edge and comparison value If programmable input: Parameter write value at rising edge If programmable output: Comparison value for condition	INT32 0.. 4294967295	- -	R/W per.
ProgIO0.Value2 800:6 (320:06$_h$)	Write value at falling edge If programmable input: Parameter write value at falling edge If programmable output: no meaning	INT32 0.. 4294967295	- -	R/W per.

Example **Parameterization for a simple manual control**

IO0 as input,	Rising edge = enable power stage	Falling edge = disable power stage + reset error
IO1 as input,	Rising edge = movement in positive direction	Falling edge = stop
IO2 as input,	Rising edge = movement in negative direction	Falling edge = stop
IO3 as output,	Output = 1 if drive ready	

Input IO0

Input	L -> H	Commands.driveCtrl 2	(Enable)
	H -> L	Commands.driveCtrl 9	(Disable + FaultReset)

Parameter name	Idx:Six	Value	Remarks
I/O.IO0_def	34:1	5	Input programmable
ProgIO0.Index	800:1	28	Index 28
ProgIO0.Subindex	800:2	1	Subindex 1
ProgIO0.Bitmask	800:3	0	Mask
ProgIO0.Switch	800:4	3	Detect both edges

0198441113556, V2.00, 09.2008

Parameter name	Idx:Six	Value	Remarks
ProgIO0.Value1	800:5	2	Value at pos. edge: Enable
ProgIO0.Value2	800:6	9	Value at neg. edge: Disable+Fault-Reset

input IO1

Input	L -> H	VEL.velocity 600	(positive movement)
	H -> L	VEL.velocity 0	(stop)

Parameter name	Idx:Six	Value	Remarks
I/O.IO1_def	34:2	5	input programmable
ProgIO1.Index	801:1	36	Index 36
ProgIO1.Subindex	801:2	1	Subindex 1
ProgIO1.Bitmask	801:3	0	Mask
ProgIO1.Switch	801:4	3	detect both edges
ProgIO1.Value1	801:5	600	speed value with rising edge
ProgIO1.Value2	801:6	0	speed value with falling edge

input IO2

Input	L -> H	VEL.start -600	(neg. movement)
	H -> L	VEL.start 0	(stop)

Parameter name	Idx:Six	Value	Remarks
I/O.IO2_def	34:3	5	input programmable
ProgIO2.Index	802:1	36	Index 36
ProgIO2.Subindex	802:2	1	Subindex 1
ProgIO2.Bitmask	802:3	0	Mask
ProgIO2.Switch	802:4	3	detect both edges
ProgIO2.Value1	802:5	-600	speed value with rising edge
ProgIO2.Value2	802:6	0	speed value with falling edge

Output IO3

Output	High	if status 6	(Status.driveStat AND 15) = 6

Parameter name	Idx:Six	Value	Remarks
I/O.IO3_def	34:4	130	Output programmable
ProgIO3.Index	803:1	28	Index 28
ProgIO3.Subindex	803:2	2	Subindex 2
ProgIO3.Bitmask	803:3	15	Mask: Bit 0..3
ProgIO3.Switch	803:4	0	condition: "="
ProgIO3.Value1	803:5	6	Comparison value: 6 = Operation Enable

0198441113556, V2.00, 09.2008

8.4.5 Function of the holding brake

Motors with integrated holding brakes help to avoid unwanted movements of the motor without current.

The holding brake is not available with all product versions.

⚠ WARNING

LOSS OF BRAKING FORCE DUE TO WEAR OR HIGH TEMPERATURE

Applying the holding brake while the motor is running will cause excessive wear and loss of the braking force. Heat decreases the braking force.

- Do not use the brake as a service brake.
- Note that "EMERGENCY STOPS" may also cause wear
- At operating temperatures of more than 80°C (176°F), do not exceed a maximum of 50% of the specified holding torque when using the brake.

Failure to follow these instructions can result in death, serious injury or equipment damage.

Control The integrated holding brake is controlled automatically.

Releasing the holding brake The holding brake is automatically released when the power stage is enabled. After a delay time the drive switches to operating stats 6 "Operation Enable".

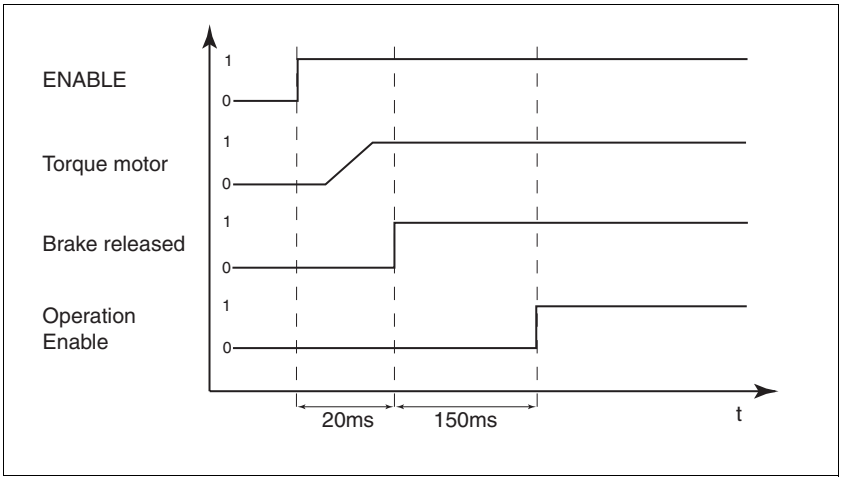

Figure 8.14 Releasing the holding brake

0198441113556, V2.00, 09.2008

Applying the holding brake

When the power stage is disabled and in the event of an error of error class 2, the holding brake is automatically applied. However, the motor current is not disconnected until after a delay time. This allows the holding brake to be applied before the motor loses its torque.

In the event of an error of error classes 3 or 4, the holding brake is automatically applied and the motor current is immediately disconnected.

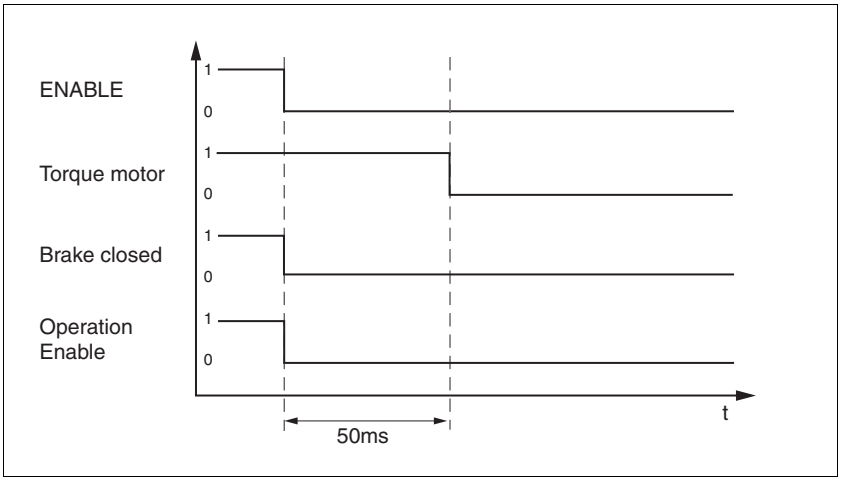

Figure 8.15 Applying the holding brake

The delay time is not effective if the power stage is disabled via the STO safety function. Especially in the case of vertical axes it is important to verify whether additional measures are required to avoid lowering of the load.

0198441113556, V2.00, 09.2008

0198441113556, V2.00, 09.2008

9 Diagnostics and troubleshooting

9.1 Error indication and troubleshooting

9.1.1 Diagnostics via commissioning software

The commissioning software can be used to display the following diagnostics information

- Indication of current operating state
  Lets you draw conclusions concerning the reasons for the drive not being ready for operation.
- Status word
  Indicates which of the 3 following signals is active:
  - External monitoring signal
  - Internal monitoring signal
  - Warning
- Parameter `Status.StopFault, 32:7`
  Cause of last interruption, error number
- Error memory
  The error memory contains the last 7 errors. The error memory is not volatile, i.e. it is not cleared when the drive is switched off.

  The following information is output for every error:
  - Age
  - Description of error as text
  - Error class
  - Error number
  - Frequency
  - Additional information

0198441113556, V2.00, 09.2008

9.1.2 Operation state and error indication

Status indication The LED shows error messages and warnings. It indicates the operating states in coded form.

Status indication	Meaning
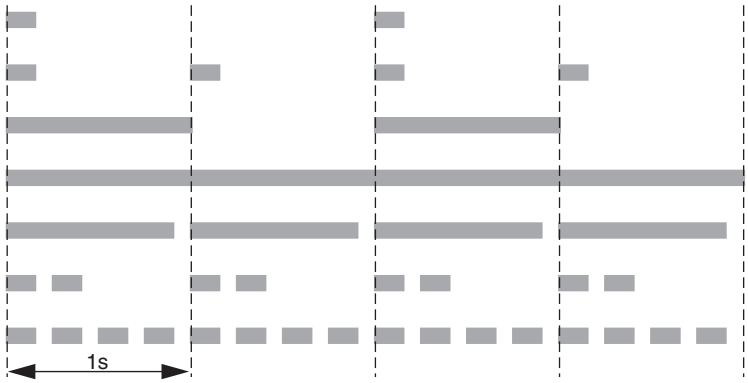	• Start-up • Undervoltage or STO • Power stage disabled • Power stage enabled • "Quick Stop" • Error • Internal error

9.1.3 Reset error message

A falling edge at the ENABLE signal input performs a "Fault Reset".

9.1.4 Error classes and error response

Error class The product triggers an error response in the event of a fault. Depending upon the severity of the fault, the device responds in accordance with one of the following error classes:

Error class	Reaction	Meaning
0	Warning	Message only, no interruption.
1	"Quick Stop"	Motor stops with "Quick Stop", power stage and controller remain switched on and enabled.
2	"Quick Stop" with switch-off	Motor stops with "Quick Stop", power stage and controller are disabled after standstill has been achieved.
3	Fatal error	Power stage and controller switch off immediately without stopping the motor first.
4	Uncontrolled operation	Power stage and controller switch off immediately without stopping the motor first. Error response can only be reset by switching off the device.

0198441113556, V2.00, 09.2008

9.1.4.1 Error handling

Handling of limit switch errors

Limit switch errors are handled as described below:

- The power stage remains enabled when a limit switch is actuated.

  Processing of the current data set is canceled when a limit switch is actuated. A subsequent data set is not executed.

  A movement away from the switch is performed by means of a reference movement or a jog movement.

- The power stage is disabled in the event of an error detected by the stall detection.

  Processing of the current data set is cabceled. A subsequent data set is not executed.

9.2 Overview of error numbers

hex	dec	Error class	Description
0100_h	256	2	Undervoltage 1 power supply
0101_h	257	3	Undervoltage 2 power supply
0102_h	258	3	Overvoltage power supply
0105_h	261	3	Motor overload
$010C_h$	268	2	Power stage overtemperature
0110_h	272	3	Motor blocked or stalled
0111_h	273	3	Tracking error
0112_h	274	4	Encoder defective
0115_h	277	1	Protocol error fieldbus
0116_h	278	2	Fieldbus: Nodeguarding/Watchdog or Clear
0117_h	279	3	Frequency at pulse/direction input too high
0118_h	280	3	Short circuit digital outputs
0119_h	281	3	STO safety function triggered
$011A_h$	282	4	Inputs of the STO safety function have different levels (>1s)
$011C_h$	284	4	EEPROM hardware error
$011D_h$	285	4	Start-up error
$011E_h$	286	4	Internal system error
$011F_h$	287	4	Watchdog
0120_h	288	0	Warning position overrun profile generator
0121_h	289	0	Warning overtemperature IGBTs
0128_h	296	0	Warning I/O timing
0130_h	304	0	Parameter does not exist, invalid index
0131_h	305	0	Parameter does not exist, invalid subindex
0132_h	306	0	Communication protocol: Unknown service
0133_h	307	0	Writing of parameter not permissible
0134_h	308	0	Parameter value out of permissible range
0135_h	309	0	Segment service not initialized

0198441113556, V2.00, 09.2008

hex	dec	Error class	Description
0136_h	310	0	Error during recording function
0137_h	311	0	State is not Operation Enable
0138_h	312	0	Processing in current operating state not possible
0139_h	313	0	Generation of reference position interrupted
$013A_h$	314	0	Switching impossible while operating mode is active
$013B_h$	315	0	Command not allowed during processing (xxxx_end=0)
$013C_h$	316	0	Error in selection parameter
$013D_h$	317	0	Position overrun
$013E_h$	318	0	Actual position is not yet defined
$013F_h$	319	4	EEPROM not initialized
0140_h	320	4	EEPROM not compatible with current software
0141_h	321	4	EEPROM read error
0142_h	322	4	EEPROM write error
0143_h	323	4	Checksum error in EEPROM
0144_h	324	0	Value cannot be calculated
0145_h	325	0	Function only allowed at standstill
0146_h	326	0	Reference movement is active
0147_h	327	0	Command not allowed during processing (xxx_end=0)
0148_h	328	1	RS485 interface: Overrun error
0149_h	329	1	RS485 interface: Framing error
$014A_h$	330	1	RS485 interface: Parity error
$014B_h$	331	1	RS485 interface: Receive error
$014C_h$	332	1	RS485 interface: Buffer overflow
$014D_h$	333	1	RS485 interface: Protocol error
$014E_h$	334	1	Nodeguarding, interface no longer serviced
$014F_h$	335	0	"Quick Stop" state activated
0150_h	336	1	Impermissible limit switch is active
0151_h	337	1	Switch was overtraveled, moving away from switch impossible
0152_h	338	1	Switching edge not found in distance for search for switching edge during movement away from switch
0153_h	339	1	Index pulse not found
0154_h	340	1	Unreliable reproducibility of the index pulse movement, index pulse too close to the switch
0155_h	341	1	Switch still active after movement away from switch
0156_h	342	1	Input not parameterized as LIMP/LIMN/REF
0157_h	343	1	Interruption / "Quick Stop" by LIMP
0158_h	344	1	Interruption / "Quick Stop" by LIMN
0159_h	345	1	Interruption / "Quick Stop" by REF
$015A_h$	346	1	Interruption / "Quick Stop" by STOP
$015B_h$	347	1	Limit switch not released
$015C_h$	348	0	Processing not allowed in current operating mode

0198441113556, V2.00, 09.2008

hex	dec	Error class	Description
$015D_h$	349	0	Parameter not available with this device
$015E_h$	350	0	Function not available with this device
$015F_h$	351	0	Access denied
0160_h	352	4	Production data in EEPROM not compatible with current software
0161_h	353	4	Index pulse sensor not compensated
0162_h	354	0	Drive is not referenced
0163_h	355	0	CAN interface: COB-ID incorrect
0164_h	356	0	CAN interface: Incorrect request
0165_h	357	0	CAN interface: Overrun error
0166_h	358	0	CAN interface: Telegram could not be saved
0167_h	359	0	CAN interface: General error CAN stack
0168_h	360	0	Fieldbus: Data type and parameter length do not match
0169_h	361	0	Blocking detection is switched off
$016A_h$	362	0	Connection to DSP boot loader not successful
$016B_h$	363	0	Error in communication with DSP boot loader
$016C_h$	364	0	Error initializing SPC3 memory
$016D_h$	365	0	Error in calculation of the length of input/output data
$016E_h$	366	0	Specified Profibus address is outside permissible range
$016F_h$	367	0	Impermissible use of parameter switch S1.1
0170_h	368	0	DSP software not compatible with Profibus software
0171_h	369	0	Checksum of Profibus DP interface software incorrect
0172_h	370	0	Oscilloscope function: No other data available
0173_h	371	0	Oscilloscope function: Trigger variable was not defined
0174_h	372	0	Parameterization of oscilloscope function incomplete
0175_h	373	1	Internal communication
0177_h	375	1	Interruption / "Quick Stop" by software limit switch clockwise rotation
0178_h	376	1	Interruption / "Quick Stop" by software limit switch counterclockwise rotation

0198441113556, V2.00, 09.2008

0198441113556, V2.00, 09.2008

10 Parameters

10.1 Representation of parameters

The way parameters are shown provides information required for unique identification of a parameter. In addition, information is provided on possible settings, defaults and parameter properties.

Parameters are represented as shown below:

Group.Name Index:Subindex dec. (hex.)	Description Bit assgnment	Data type range dec.	Unit Default dec.	R/W per.
Example.Name 12:34 (C:22_h)	Example	UINT16 1..127	- 127	R/W per.

Group.Name Parameter name consisting of the name of the parameter group (="Group") and the name of the specific parameter (="Name").

Default value Factory setting.

Data type The data type determines the valid range of values, especially if minimum and maximum values are not explicitly indicated for a parameter.

Data type	Byte	Min value	Max value
INT8	1 Byte / 8 Bit	-128	127
UINT8	1 Byte / 8 Bit	0	255
INT16	2 Byte / 16 Bit	-32768	32767
UINT16	2 Byte / 16 Bit	0	65535
INT32	4 Byte / 32 Bit	-2147483648	2147483647
UINT32	4 Byte / 32 Bit	0	4294967295

Unit The unit of the value.

R/W Indicates read and/or write values

"R/" values can only be read
"R/W" values can be read and written.

Persistent "per." indicates whether the value of the parameter is persistent, i.e. whether it remains in the memory after the device is switched off . When changing a value via commissioning software or fieldbus, the user must explicitly store the changed value in the persistent memory.

0198441113556, V2.00, 09.2008

10.2 Overview Parameters

Config	Drive configuration
DataSet	Control mode "Motion Sequence"
ErrMem0	Error memory
Homing	Operating mode "Homing"
I/O	Status and definition of inputs and outputs
Manual	Operating mode "Jog"
Motion	Function "Definition of the direction of rotation" Function "Quick Stop" Default reference speed Acceleration and deceleration
ProgIO0..3	Function "Programmable inputs/outputs"
PTP	Operating mode "Profile Position"
RS485	Setting RS485 bus
Settings	User-defined device name Phase currents Monitoring inputs
Status	Status information and read values

0198441113556, V2.00, 09.2008

10.3 Parameter groups

10.3.1 Parameter group "Config"

Group.Name Index:Subindex dec. (hex.)	Description Bit assgnment	Data type range dec.	Unit Default dec.	R/W per.
Config.STO_con 13:16 (0D:10_h)	Status of signal inputs $\overline{\texttt{STO_A}}$ ($\overline{\texttt{PWRR_A}}$) and $\overline{\texttt{STO_B}}$ ($\overline{\texttt{PWRR_B}}$) of the STO safety function Value 0: Inputs not available Value 1: Jumper plugged in (safety function inactive) Value 3: Current at inputs (safety function active)	UINT16 0..3	- -	R/-
Config.ResolutM 29:2 (1D:02_h)	Positioning resolution of the drive Read value for the resolution of the drive in increments per revolution. Value is applicable directly at the motor shaft (without gearbox).	UINT16	Inc 20000	R/-

10.3.2 "DataSet" parameter group

Group.Name Index:Subindex dec. (hex.)	Description Bit assgnment	Data type range dec.	Unit Default dec.	R/W per.
DataSet.GlobCond 45:6 (2D:06_h)	Global transition condition after switch to state 6 "Operation Enable". This is used as a transition condition for the start of the first data set and for data sets that have "GlobCond" set as transition condition. Value 0: Rising edge Value 1: Falling edge Value 2: 1 level Value 3 = 0 level The parameter is only read during the sequential selection of data sets.	UINT16 0 ... 3	- 0	R/W per.
DataSet.AutoEnabl 45:7 (2D:07_h)	Automatic enabling of the power stage. Required if `ENABLE` is not wired. Value 0: Autoenable deactivated Value 1: Autoenable activated	UINT16 0 ... 1	- 0	R/W per.
Data- Set.FuncOUT_1 45:15 (2D:$0E_h$)	Function for output FUNCT1_OUT: Value 0: Handshake at START Value 1: Trigger output Value 2: Drive referenced Value 3: Power stage switched on Value 4: Motor movement active Value 5: Limit switch tripped Value 6: Selective error output (error number can be set via `DataSet.OutError`).	UINT16 0 ... 6	- 0	R/W per.

0198441113556, V2.00, 09.2008

Group.Name Index:Subindex dec. (hex.)	Description Bit assgnment	Data type range dec.	Unit Default dec.	R/W per.
Data- Set.FuncOUT_2 45:16 (2D:0F$_h$)	Function for output FUNCT2_OUT: Value 0: Handshake at START Value 1: Trigger output Value 2: Drive referenced Value 3: Power stage switched on Value 4: Motor movement active Value 5: Limit switch tripped Value 6: Selective error output (error number can be set via `DataSet.OutError`).	UINT16 0 ... 6	- 3	R/W per.
DataSet.OutError 45:17 (2D:11$_h$)	Error number of selective error output. Number of error at which FUNCT1_OUT or FUNCT2_OUT are to assume 1 level (only if selective error output is activated) e.g. 272 = motor blocked or stalled.	UINT16 0 ... 65535	- 272	R/W per.

10.3.3 Parameter group "Homing"

Group.Name Index:Subindex dec. (hex.)	Description Bit assgnment	Data type range dec.	Unit Default dec.	R/W per.
Homing.v_Home 40:4 (28:04$_h$)	Speed of rotation for search of switch	UINT16 1..3600	min^{-1} 60	R/W per.
Homing.v_outHome 40:5 (28:05$_h$)	Speed of rotation for moving away from switch	UINT16 1..3600	min^{-1} 6	R/W per.
Homing.p_outHome 40:6 (28:06$_h$)	Maximum distance for search for switching edge After detection of the switch, the drive starts to search for the defined switching edge. If it is not found within the distance defined here, the reference movement is canceled with an error.	INT32 1.. 2147483647	Inc 200000	R/W per.
Homing.p_disHome 40:7 (28:07$_h$)	Distance from switching edge to reference point After the drive moves away from the switch, it is positioned into the working range by a defined distance; this is defined as the reference point.	INT32 1.. 2147483647	Inc 200	R/W per.
Homing.RefSwMod 40:9 (28:09$_h$)	Processing sequence during reference movement to REF Bit value 0: In positive direction Bit value 1: In negative direction Assignment of bits: Bit 0: Direction of movement to switching edge Bit 1: Direction of movement to distance from switching edge	UINT16 0..3	- 0	R/W per.
Homing.IndexMod 40:10 (28:0A$_h$)	Processing sequence during reference movement to index pulse Bit value 0: Same direction Bit value 1: Opposite direction Assignment of bits: Bit 0: Direction of movement	UINT16 0..1	- 0	R/W per.
Homing.RefAppPos 40:11 (28:0B$_h$)	Application position at reference point After a successful reference movement, this position is set at the reference point. This automatically defines the application zero point.	INT32	Inc 0	R/W per.

0198441113556, V2.00, 09.2008

Group.Name Index:Subindex dec. (hex.)	Description Bit assgnment	Data type range dec.	Unit Default dec.	R/W per.
Homing.p_diffind 40:12 (28:0C_h)	Distance start position - index pulse after reference movement Value of the position difference between start position and index pulse. Can be read to verify check the reference movement with index pulse is reproducible.	UINT16 0..20000	Inc -	R/-
Homing.refError 40:13 (28:0D_h)	Cause of error during reference movement Error code during reference movement processing	UINT16	- -	R/-

10.3.4 Parameter group "I/O"

Group.Name Index:Subindex dec. (hex.)	Description Bit assgnment	Data type range dec.	Unit Default dec.	R/W per.
I/O.IO0_def 34:1 (22:01$_h$)	Configuration of IO0 Value 0: Input freely usable Value 1: Input LIMP (only with IO0) Value 2: Input LIMN (only with IO1) Value 3: Input STOP Value 4: Input REF Value 5: Input programmable Value 128: Output freely usable Value 129: Output index pulse (only with IO0) Value 130: Output programmable	UINT16 0..255	- 1	R/W per.
I/O.IO1_def 34:2 (22:02$_h$)	Configuration of IO1 See parameter IO0_def	UINT16 0..255	- 2	R/W per.
I/O.IO2_def 34:3 (22:03$_h$)	Configuration of IO2 See parameter IO0_def	UINT16 0..255	- 5	R/W per.
I/O.IO3_def 34:4 (22:04$_h$)	Configuration of IO3 See parameter IO0_def	UINT16 0..255	- 5	R/W per.
I/O.progDelay 34:7 (22:07$_h$)	Delay time for programmed I/O processing After the drive is switched on, the function "programmable inputs and outputs" is only activated after the delay time set here. This allows you to lock manual operation of a system for a certain period during start-up until a fieldbus controller takes over.	UINT16 0..60	Sec 0	R/W per.

0198441113556, V2.00, 09.2008

10.3.5 Parameter group "Manual"

Group.Name Index:Subindex dec. (hex.)	Description Bit assgnment	Data type range dec.	Unit Default dec.	R/W per.
Manual.startMan 41:1 (29:01$_h$)	Starting a jog Assignment of bits: Bit 0: Clockwise direction of rotation Bit 1: Counterclockwise direction of rotation Bit 2: 0 = slow 1 = fast Bit 3: Automatic processing of power stage If bit 3 is set to 1, a jog movement can be started even if the power stage is switched off: If the drive is in state 4 (Ready-ToSwitchOn), the power stage is automatically switched on when the jog movement is started and switched off when the movement is finished.	UINT16 0..15	- 0	R/W
Manual.stateMan 41:2 (29:02$_h$)	Acknowledgement: Jog Assignment of bits: Bit 0: Error LIMP Bit 1: Error LIMN Bit 2: Error HW_STOP Bit 3: Error REF Bit 7: Error SW_STOP Bit 14: manu_end Bit 15: manu_err	UINT16	- -	R/-
Manual.n_slowMan 41:4 (29:04$_h$)	Speed for slow jog	UINT16 1..3600	min^{-1} 60	R/W per.
Manual.n_fastMan 41:5 (29:05$_h$)	Speed for fast jog	UINT16 1..3600	min^{-1} 600	R/W per.
Manual.step_Man 41:7 (29:07$_h$)	Jogging distance at jog start Value 0: Direct activation of continuous movement	UINT16	Inc 20	R/W per.
Manual.time_Man 41:8 (29:08$_h$)	Waiting time until continuous movement starts Only effective if jog distance is not set to equal 0.	UINT16 1..10000	ms 500	R/W per.

10.3.6 Parameter group "Motion"

Group.Name Index:Subindex dec. (hex.)	Description Bit assgnment	Data type range dec.	Unit Default dec.	R/W per.
Motion.invertDir 28:6 (1C:06$_h$)	Definition of direction of rotation Value 0: Clockwise direction of rotation With positive reference values, the motor rotates clockwise (as you look at the end of the protruding motor shaft). Value 1: Counterclockwise direction of rotation With positive reference values, the motor rotates counterclock-wise (as you look at the end of the protruding motor shaft). NOTE: The new value is only activated when the drive is switched on.	UINT16 0..1	- 0	R/W per.
Motion.dec_Stop 28:21 (1C:15$_h$)	Deceleration for "Quick Stop" Deceleration that is used for every "Quick Stop": - "Quick Stop" via control word - "Quick Stop" via external monitoring signal - "Quick Stop" via error of classes 1 and 2	UINT32 1...765000	min^{-1}/s 6000	R/W per.

0198441113556, V2.00, 09.2008

Group.Name Index:Subindex dec. (hex.)	Description Bit assgnment	Data type range dec.	Unit Default dec.	R/W per.
Motion.acc 29:26 (1D:1A$_h$)	Acceleration Value determines acceleration and deceleration. New values do not become effective until after standstill.	UINT32 1...765000	min^{-1}/s 600	R/W per.

10.3.7 Parameter group "ProgIO0"

The meanings for parameter groups "ProgIO0" (Index 800), "ProgIO1" (Index 801), "ProgIO2" (Index 802), "ProgIO3" (Index 803) are identical.

Group.Name Index:Subindex dec. (hex.)	Description Bit assgnment	Data type range dec.	Unit Default dec.	R/W per.
ProgIO0.Index 800:1 (320:01$_h$)	Index of the control parameter If prog. input: index of parameter to be written If prog. output: index of parameter to be read If prog. input: write(Index,Subindex) = (read(Index,Subindex) BAND BitMask) BOR VALUEx If prog. output: 1 level at output if (read(Index,Subindex) BAND BitMask) =<> VALUE1	UINT16	- -	R/W per.
ProgIO0.Subindex 800:2 (320:02$_h$)	Subindex of control parameter If prog. input: subindex of parameter to be written If prog. output: subindex of parameter to be read	UINT16	- -	R/W per.
ProgIO0.BitMask 800:3 (320:03$_h$)	Bitmask for the parameter value If programmable input or programmable output: Bit mask used to link the read value (index, subindex) of the parameter with the operator AND before the value is processed.	UINT32	- -	R/W per.
ProgIO0.Switch 800:4 (320:04$_h$)	Edge detection and comparison operator If programmable input: Selection of the edges to be detected Value 0: No response to level change Value 1: Response to rising edge Value 2: Response to falling edge Value 3: Response to both edges If programmable output: Selection of condition for comparison: Value 0: (parameter read value = comparison value) Value 1: (parameter read value <> comparison value) Value 2: (parameter read value < comparison value) Value 0: (parameter read value > comparison value)	UINT16	- -	R/W per.

0198441113556, V2.00, 09.2008

Group.Name Index:Subindex dec. (hex.)	Description Bit assgnment	Data type range dec.	Unit Default dec.	R/W per.
ProgIO0.Value1 800:5 (320:05$_h$)	Write Write value at rising edge and comparison value If programmable input: Parameter write value at rising edge If programmable output: Comparison value for condition	INT32 0.. 4294967295	- -	R/W per.
ProgIO0.Value2 800:6 (320:06$_h$)	Write value at falling edge If programmable input: Parameter write value at falling edge If programmable output: no meaning	INT32 0.. 4294967295	- -	R/W per.

10.3.8 Parameter group "PTP"

Group.Name Index:Subindex dec. (hex.)	Description Bit assgnment	Data type range dec.	Unit Default dec.	R/W per.
PTP.p_absPTP 35:1 (23:01$_h$)	Target position for absolute positioning and start of positioning Action object: write access triggers absolute positioning in increments	INT32	Inc -	R/W
PTP.StatePTP 35:2 (23:02$_h$)	Acknowledgement: Profile Position Assignment of bits: Bit 0: Error LIMP Bit 1: Error LIMN Bit 2: Error STOP Bit 3: Error REF Bit 7: SW_STOP Bit 13: Target position reached Bit 14: ptp_end Bit 15: ptp_err	UINT16	- -	R/-
PTP.p_relPTP 35:3 (23:03$_h$)	Target position for relative positioning and start of positioning Action object: write access triggers relative positioning in increments	INT32	Inc -	R/W
PTP.continue 35:4 (23:04$_h$)	Continue interrupted positioning The target position was specified with the previous positioning command. The value indicated here is not relevant for positioning.	UINT16	- 0	R/W
PTP.v_tarPTP 35:5 (23:05$_h$)	Target speed of rotation for positioning Positioning can be temporarily stopped with value 0. The default value is the value of parameter `Motion.v_target0`.	UINT16	min^{-1}	R/W

0198441113556, V2.00, 09.2008

10.3.9 Parameter group "RS485"

Group.Name Index:Subindex dec. (hex.)	Description Bit assgnment	Data type range dec.	Unit Default dec.	R/W per.
RS485.serBaud 22:1 (16:01$_h$)	Baud rate The following values are permitted: Value 9600: 9600 Baud Value 19200: 19200 Baud Value 38400: 38400 Baud	UINT16 0..38400	- 9600	R/W per.
RS485.serAdr 22:2 (16:02$_h$)	Address Permissible values 1...31	UINT16 1..31	- 1	R/W per.
RS485.serFormat 22:3 (16:03$_h$)	Data format Assignment of bits: Bit 0: 0 = no parity, 1 = parity on Bit 1: 0 = parity even, 1 = parity odd Bit 2: 0 = 7 data bits, 1 = 8 data bits Bit 3: 0 = 1 stop bit, 1 = 2 stop bits Default is 0 = 7-E-1	UINT16 0..15	- 0	R/W per.

10.3.10 Parameter group "Settings"

Group.Name Index:Subindex dec. (hex.)	Description Bit assgnment	Data type range dec.	Unit Default dec.	R/W per.
Settings.name1 11:1 (0B:01$_h$)	User device name part 1 Default = 538976288 = 20202020$_h$ = 4 spaces User-programmable designation in the form of a text with a length of 8 characters	UINT32	- 538976288	R/W per.
Settings.name2 11:2 (0B:02$_h$)	User device name part 2 Default = 538976288 = 20202020$_h$ = 4 spaces User-programmable designation in the form of a text with a length of 8 characters	UINT32	- 538976288	R/W per.
Settings.I_still 14:1 (0E:01$_h$)	Motor phase current standstill Becomes active after 100ms motor standstill. Current is specified in percent of nominal current.	UINT16 0..100	% 70	R/W per.
Settings.I_acc 14:2 (0E:02$_h$)	Motor phase current acceleration / deceleration Current is specified in percent of nominal current.	UINT16 0..100	% 100	R/W per.
Settings.I_const 14:3 (0E:03$_h$)	Motor phase current constant movement Current is specified in percent of nominal current.	UINT16 0..100	% 100	R/W per.
Settings.I_stop 14:4 (0E:04$_h$)	Motor phase current for "Quick Stop" Current is specified in percent of nominal current.	UINT16 0..100	% 100	R/W per.
Settings.monitorM 14:7 (0E:07$_h$)	Motor monitoring (stall detection) Value 0: Motor monitoring inactive Value 1: Motor monitoring active	UINT16 0..1	- 1	R/W per.

0198441113556, V2.00, 09.2008

Group.Name Index:Subindex dec. (hex.)	Description Bit assgnment	Data type range dec.	Unit Default dec.	R/W per.
Settings.SignEnabl 28:13 (1C:0D$_h$)	Activation of monitoring inputs Bit value 0: Monitoring is not active Bit value 1: Monitoring is active Assignment of bits: Bit 0: LIMP (positive limit switch) Bit 1: LIMN (negative limit switch) Bit 2: STOP (STOP switch) Bit 3: REF (reference switch) NOTE: Monitoring is only active if the I/O port is configured as the corresponding function (parameter I/O.IO0_def to IO3_def).	UINT16 0..15	- 2	R/W per.
Settings.SignLevel 28:14 (1C:0E$_h$)	Signal level for monitoring inputs Used to define whether errors are triggered at 0 or 1 level. Bit value 0: Response at 0 level Bit value 1: Response at 1 level Assignment of bits: Bit 0: LIMP Bit 1: LIMN Bit 2: STOP Bit 3: REF	UINT16 0..15	- 0	R/W per.

10.3.11 Parameter group "Status"

Group.Name Index:Subindex dec. (hex.)	Description Bit assgnment	Data type range dec.	Unit Default dec.	R/W per.
Status.driveStat 28:2 (1C:02$_h$)	Status word for the operating state LOW-UINT16: Assignment of bits: Bits 0 ... 3: Current operating state Bit 4: reserved Bit 5: Error detected by internal monitoring Bit 6: Error detected by external monitoring Bit 7: Warning active Bits 8 ... 11: Reserved Bits 12 ... 15: Operating-mode specific coding Corresponds to the assignment of bits 12 ...15 in the operating mode-specific acknowledgement data. HIGH-UINT16: Assignment see parameter `Status.xMode_act`.	UINT32	- -	R/-

0198441113556, V2.00, 09.2008

Group.Name Index:Subindex dec. (hex.)	Description Bit assgnment	Data type range dec.	Unit Default dec.	R/W per.
Status.xMode_act 28:3 (1C:03_h)	Current operating mode with additional information Assignment of bits: Bits 0..3: Current operating mode (see below) Bit 4: reserved Bit 5: Drive referenced (ref_ok) Bits 6 ... 15: Reserved Values for bits 0 ... 3: Value 1: Jog Value 2: Homing Value 3: Profile Position Value 4: Profile Velocity Other numbers are reserved for future extensions.	UINT16	- -	R/-
Status.WarnSig 28:10 (1C:$0A_h$)	Warnings Monitoring signals with error class 0. Assignment of bits: Bit 0: Position overrun profile generator Bit 1: Temperature of power stage >100°C The remaining bits are reserved for later extensions.The remaining bits are reserved for future extensions.	UINT16	- -	R/-
Status.Sign_SR 28:15 (1C:$0F_h$)	Stored signal status of external monitoring signals Bit value 0: not activated Bit value 1: activated Assignment of bits: Bit 0: LIMP Bit 1: LIMN Bit 2: STOP Bit 3: REF Bit 7: SW stop Stored signal status of released external monitoring signals	UINT16 0..15	- -	R/-
Status.FltSig 28:17 (1C:11_h)	Active monitoring signals The error bits remain set as long as the error persists (i.e. as long as the limit value is exceeded). Assignment as parameter `Status.FltSig_SR`	UINT32	- -	R/-

0198441113556, V2.00, 09.2008

Group.Name Index:Subindex dec. (hex.)	Description Bit assgnment	Data type range dec.	Unit Default dec.	R/W per.
Status.FltSig_SR 28:18 (1C:12$_h$)	Stored monitoring signals Error bits remain set until a FaultReset is executed. Assignment of bits: Bit 0: Undervoltage 1 power supply Bit 1: Undervoltage 2 power supply Bit 2: Overvoltage power supply Bit 5: Motor overload Bit 12: Overtemperature power stage (≥105°C) Bit 16: Blocking error Bit 17: Tracking error Bit 18: Encoder inoperative Bit 21: Protocol error fieldbus Bit 22: Nodeguard error Bit 23: Pulse/directing input timing Bit 25: STO safety function triggered Bit 26: Signals of the STO safety function have different levels Bit 28: Hardware error EEPROM Bit 29: Start-up error Bit 30: Internal system error Bit 31: Watchdog	UINT32	- -	R/-
Status.action_st 28:19 (1C:13$_h$)	Action word Assignment of bits: Bit 0: Bit latched error class 0 Bit 1: Bit latched error class 1 Bit 2: Bit latched error class 2 Bit 3: Bit latched error class 3 Bit 4: Bit latched error class 4 Bit 5: reserved Bit 6: Motor at standstill: actual speed of rotation is zero Bit 7: Motor rotates clockwise Bit 8: Motor rotates counterclockwise Bit 9: reserved Bit 10: reserved Bit 11: Motor at standstill: reference speed of rotation is 0 Bit 12: Motor decelerates Bit 13: Motor accelerates Bit 14: Motor moves at constant speed Bit 15: reserved	UINT16	- -	R/-
Settings.SwLimP 29:4 (1D:04$_h$)	Positive position limit for software limit switch	INT32	Inc 0	R/W per.
Settings.SwLimN 29:5 (1D:05$_h$)	Negative position limit for software limit switch	INT32	Inc 0	R/W per.
Status.SwLimEna 29:6 (1D:06$_h$)	Monitoring of software limit switches Value 0: None Value 1: Enable software limit switch clockwise direction of rotation Value 2: Enable software limit switch counterclockwise direction of rotation Value 3: Enable software limit switches both directions of rotation The software limit switches are only available for drives with multiturn encoders.	UINT16 0..3	- 0	R/W per.
Status.p_act 31:6 (1F:06$_h$)	Actual position of motor	INT32	Inc -	R/-

0198441113556, V2.00, 09.2008

Group.Name Index:Subindex dec. (hex.)	Description Bit assgnment	Data type range dec.	Unit Default dec.	R/W per.
Status.n_act 31:9 (1F:09_h)	Actual speed of motor	INT16	min^{-1} -	R/-
Status.UDC_act 31:20 (1F:14_h)	Voltage power supply Unit [0.1V]	UINT16	V -	R/-
Status.TPA_act 31:25 (1F:19_h)	Power stage temperature	UINT16 20..110	°C -	R/-
Status.StopFault 32:7 (20:07_h)	Cause of last interruption, error number	UINT16	- 0	R/-
Status.Brake 33:8 (21:08_h)	Status of holding brake Value 0: Holding brake applied Value 1: Holding brake released	UINT16 0..1	- -	R/-

0198441113556, V2.00, 09.2008

11 Accessories and spare parts

11.1 Accessories

Source commissioning software

The latest version of the commissioning software is available for download from the internet:

http://www.schneider-electric.com

Source EPLAN Macros

For easier engineering, macro files and product master data are available for download from the Internet at:

http://www.schneider-electric.com

Designation	Order no.
Braking Resistor Controller UBC60	ACC3EA001
Installation kit	VW3L10111
Insert with cable entry (2 pcs)	VW3L10100N2
Insert with cable entry (10 pcs)	VW3L10100N10
Cable entry for commissioning	VW3L10222
Insert for sealing (10 pcs)	VW3L10000N10
Insert for sealing (20 pcs)	VW3L10000N20
Insert for sealing (50 pcs)	VW3L10000N50
Cable for commissioning interface, 3m	VW3L1R000R30
Insert kit for commissioning	VW3L1R000
Cable kit, STO, 3m	VW3L20010R30
Cable kit, STO, 5m	VW3L20010R50
Cable kit, STO, 10m	VW3L20010R100
Cable kit, STO, 15m	VW3L20010R150
Cable kit, STO, 20m	VW3L20010R200
Cable kit, power supply, motion sequence, I/O, STO, 3m	VW3L2M211R30
Cable kit, power supply, motion sequence, I/O, STO, 5m	VW3L2M211R50
Cable kit, power supply, motion sequence, I/O, STO, 10m	VW3L2M211R100
Cable kit, power supply, motion sequence, I/O, STO, 15m	VW3L2M211R150
Cable kit, power supply, motion sequence, I/O, STO, 20m	VW3L2M211R200
Cable kit, power supply, motion sequence, 3m	VW3L2M001R30
Cable kit, power supply, motion sequence, 5m	VW3L2M001R50
Cable kit, power supply, motion sequence, 10m	VW3L2M001R100
Cable kit, power supply, motion sequence, 15m	VW3L2M001R150
Cable kit, power supply, motion sequence, 20m	VW3L2M001R200
Cable, STO, 3m	VW3L30010R30
Cable, STO, 5m	VW3L30010R50
Cable, STO, 10m	VW3L30010R100
Cable, STO, 15m	VW3L30010R150
Cable, STO, 20m	VW3L30010R200

0198441113556, V2.00, 09.2008

Tool The tools required for cable assembly must be ordered directly from the manufacturer.

- Crimping tool for CN1: AMP 654174-1
- Crimping tool for CN2, CN4 and CN5: Molex 69008-0982
- Crimping tool for CN3: Molex 69008-0724
- Extraction tool for CN2, CN4 and CN5: Molex 11-03-0043
- Extraction tool for CN3: Molex 11-03-0044

Converter An RS232/USB to RS485 converter is required for service and to upgrade the operating system.

- NuDAM converter RS232-RS485: Acceed ND-6520
- NuDAM converter USB-RS485: Acceed ND-6530

11.2 Gearboxes

Designation	Order no.
Planetary gear for Lexium Integrated Drive ILSxx571, ratio 3/1	GBX060003S571L
Planetary gear for Lexium Integrated Drive ILSxx571, ratio 5/1	GBX060005S571L
Planetary gear for Lexium Integrated Drive ILSxx571, ratio 8/1	GBX060008S571L
Planetary gear for Lexium Integrated Drive ILSxx572, ratio 3/1	GBX060003S572L
Planetary gear for Lexium Integrated Drive ILSxx572, ratio 5/1	GBX060005S572L
Planetary gear for Lexium Integrated Drive ILSxx572, ratio 8/1	GBX060008S572L
Planetary gear for Lexium Integrated Drive ILSxx573, ratio 3/1	GBX060003S573L
Planetary gear for Lexium Integrated Drive ILSxx573, ratio 5/1	GBX060005S573L
Planetary gear for Lexium Integrated Drive ILSxx573, ratio 8/1	GBX060008S573L
Planetary gear for Lexium Integrated Drive ILSxx851, ratio 3/1	GBX080003S851L
Planetary gear for Lexium Integrated Drive ILSxx851, ratio 5/1	GBX080005S851L
Planetary gear for Lexium Integrated Drive ILSxx851, ratio 8/1	GBX080008S851L
Planetary gear for Lexium Integrated Drive ILSxx852, ratio 3/1	GBX080003S852L
Planetary gear for Lexium Integrated Drive ILSxx852, ratio 5/1	GBX080005S852L
Planetary gear for Lexium Integrated Drive ILSxx852, ratio 8/1	GBX080008S852L
Planetary gear for Lexium Integrated Drive ILSxx853, ratio 3/1	GBX080003S853L
Planetary gear for Lexium Integrated Drive ILSxx853, ratio 5/1	GBX080005S853L
Planetary gear for Lexium Integrated Drive ILSxx853, ratio 8/1	GBX080008S853L

0198441113556, V2.00, 09.2008

12 Service, maintenance and disposal

⚠ CAUTION

DAMAGE TO SYSTEM COMPONENTS AND LOSS OF CONTROL

Interruptions of the negative connection of the controller supply voltage can cause excessively high voltages at the signal connections.

- Do not interrupt the negative connection between the power supply unit and load with a fuse or switch.
- Verify correct connection before switching on.
- Do not connect the controller supply voltage or change its wiring while the is supply voltage present.

Failure to follow these instructions can result in injury or equipment damage.

⚠ CAUTION

RISK OF INJURY WHEN REMOVING CIRCUIT BOARD PLUGS

- When removing them note that the connectors must be unlocked.
  - Supply voltage VDC:
    Unlock by pulling at the plug housing
  - Miscellaneous:
    Unlock by pressing the locking lever
- Always hold the plug to remove it (not the cable).

Failure to follow these instructions can result in injury or equipment damage.

The product may only be repaired by a certified customer service center. No warranty or liability is accepted for repairs made by unauthorized persons.

0198441113556, V2.00, 09.2008

12.1 Service address

If you cannot resolve an error yourself please contact your sales office. Have the following details available:

- Nameplate (type, identification number, serial number, DOM, ...)
- Type of error (such as LED flash code or error number)
- Previous and concomitant circumstances
- Your own assumptions concerning the cause of the error

Also include this information if you return the product for inspection or repair.

If you have any questions please contact your sales office. Your sales office staff will be happy to give you the name of a customer service office in your area.

http://www.schneider-electric.com

12.2 Maintenance

Check the product for pollution or damage at regular intervals, depending on the way you use it.

12.2.1 Lifetime STO safety function

The STO safety function is designed for a lifetime of 20 years. After this period, the data of the safety function are no longer valid. The expiry date is determined by adding 20 years to the DOM shown on the nameplate.

▶ This date must be included in the maintenance plan of the system.

Do not use the safety function after this date.

Example The DOM on the nameplate of the device is shown in the format DD.MM.YY, e.g. 31.12.07. (December 31, 2007). This means: Do not use the safety function after December 31, 2027.

0198441113556, V2.00, 09.2008

12.3 Replacing units

⚠ WARNING

UNINTENDED BEHAVIOR

The behavior of the drive system is governed by numerous stored data or settings. Unsuitable settings or data may trigger unexpected movements or responses to signals and disable monitoring functions.

- Do NOT operate the drive system with unknown settings or data.
- Verify that the stored data and settings are correct.
- When commissioning, carefully run tests for all operating states and potential fault situations.
- Verify the functions after replacing the product and also after making changes to the settings or data.
- Only start the system if there are no persons or obstructions in the hazardous area.

Failure to follow these instructions can result in death, serious injury or equipment damage.

Observe the following procedure when replacing devices.

▶ Save all parameter settings to your PC using the commissioning software, see chapter 7.3 "Lexium CT commissioning software".

▶ Switch off all supply voltages. Verify that no voltages are present (safety instructions).

▶ Label all connections and uninstall the product.

▶ Note the identification number and the serial number shown on the product nameplate for later identification.

▶ Install the new product as per chapter 6 "Installation"

▶ Commission the product as per chapter 7 "Commissioning".

12.4 Shipping, storage, disposal

Removal Removal procedure:

▶ Switch off the power supply.

▶ Disconnect the power supply.

▶ Pull out all plugs.

▶ Remove the product from the system.

Shipping The product must be protected against shocks during transportation. If possible, use the original packaging for shipping.

Storage The product may only be stored in spaces where the specified permissible ambient conditions for room temperature and humidity are met. Protect the product from dust and dirt.

Disposal The product consists of various materials that can be recycled and must be disposed of separately. Dispose of the product in accordance with local regulations.

0198441113556, V2.00, 09.2008

0198441113556, V2.00, 09.2008

13 Glossary

13.1 Units and conversion tables

The value in the specified unit (left column) is calculated for the desired unit (top row) with the formula (in the field).

Example: conversion of 5 meters [m] to yards [yd]
5 m / 0.9144 = 5.468 yd

13.1.1 Length

	in	ft	yd	m	cm	mm
in	-	/ 12	/ 36	* 0.0254	* 2.54	* 25.4
ft	* 12	-	/ 3	* 0.30479	* 30.479	* 304.79
yd	* 36	* 3	-	* 0.9144	* 91.44	* 914.4
m	/ 0.0254	/ 0.30479	/ 0.9144	-	* 100	* 1000
cm	/ 2.54	/ 30.479	/ 91.44	/ 100	-	* 10
mm	/ 25.4	/ 304.79	/ 914.4	/ 1000	/ 10	-

13.1.2 Mass

	lb	oz	slug	kg	g
lb	-	* 16	* 0.03108095	* 0.4535924	* 453.5924
oz	/ 16	-	* $1.942559*10^{-3}$	* 0.02834952	* 28.34952
slug	/ 0.03108095	/ $1.942559*10^{-3}$	-	* 14.5939	* 14593.9
kg	/ 0.453592370	/ 0.02834952	/ 14.5939	-	* 1000
g	/ 453.592370	/ 28.34952	/ 14593.9	/ 1000	-

13.1.3 Force

	lb	oz	p	dyne	N
lb	-	* 16	* 453.55358	* 444822.2	* 4.448222
oz	/ 16	-	* 28.349524	* 27801	* 0.27801
p	/ 453.55358	/ 28.349524	-	* 980.7	* $9.807*10^{-3}$
dyne	/ 444822.2	/ 27801	/ 980.7	-	/ $100*10^{3}$
N	/ 4.448222	/ 0.27801	/ $9.807*10^{-3}$	* $100*10^{3}$	-

13.1.4 Power

	HP	W
HP	-	* 745.72218
W	/ 745.72218	-

0198441113556, V2.00, 09.2008

13.1.5 Rotation

	min^{-1} (RPM)	rad/s	deg./s
min^{-1} (RPM)	-	* π / 30	* 6
rad/s	* 30 / π	-	* 57.295
deg./s	/ 6	/ 57.295	-

13.1.6 Torque

	lb·in	lb·ft	oz·in	Nm	kp·m	kp·cm	dyne·cm
lb·in	-	/ 12	* 16	* 0.112985	* 0.011521	* 1.1521	* $1.129*10^6$
lb·ft	* 12	-	* 192	* 1.355822	* 0.138255	* 13.8255	* $13.558*10^6$
oz·in	/ 16	/ 192	-	* $7.0616*10^{-3}$	* $720.07*10^{-6}$	* $72.007*10^{-3}$	* 70615.5
Nm	/ 0.112985	/ 1.355822	/ $7.0616*10^{-3}$	-	* 0.101972	* 10.1972	* $10*10^6$
kp·m	/ 0.011521	/ 0.138255	/ $720.07*10^{-6}$	/ 0.101972	-	* 100	* $98.066*10^6$
kp·cm	/ 1.1521	/ 13.8255	/ $72.007*10^{-3}$	/ 10.1972	/ 100	-	* $0.9806*10^6$
dyne·cm	/ $1.129*10^6$	/ $13.558*10^6$	/ 70615.5	/ $10*10^6$	/ $98.066*10^6$	/ $0.9806*10^6$	-

13.1.7 Moment of inertia

	$lb·in^2$	$lb·ft^2$	$kg·m^2$	$kg·cm^2$	$kp·cm·s^2$	$oz·in^2$
$lb·in^2$	-	/ 144	/ 3417.16	/ 0.341716	/ 335.109	* 16
$lb·ft^2$	* 144	-	* 0.04214	* 421.4	* 0.429711	* 2304
$kg·m^2$	* 3417.16	/ 0.04214	-	* $10*10^3$	* 10.1972	* 54674
$kg·cm^2$	* 0.341716	/ 421.4	/ $10*10^3$	-	/ 980.665	* 5.46
$kp·cm·s^2$	* 335.109	/ 0.429711	/ 10.1972	* 980.665	-	* 5361.74
$oz·in^2$	/ 16	/ 2304	/ 54674	/ 5.46	/ 5361.74	-

13.1.8 Temperature

	°F	°C	K
°F	-	(°F - 32) * 5/9	(°F - 32) * 5/9 + 273.15
°C	°C * 9/5 + 32	-	°C + 273,15
K	(K - 273.15) * 9/5 + 32	K - 273.15	-

13.1.9 Conductor cross section

AWG	1	2	3	4	5	6	7	8	9	10	11	12	13
mm^2	42.4	33.6	26.7	21.2	16.8	13.3	10.5	8.4	6.6	5.3	4.2	3.3	2.6

AWG	14	15	16	17	18	19	20	21	22	23	24	25	26
mm^2	2.1	1.7	1.3	1.0	0.82	0.65	0.52	0.41	0.33	0.26	0.20	0.16	0.13

0198441113556, V2.00, 09.2008

13.2 Terms and Abbreviations

AC	Alternating current
ASCII	American Standard Code for Information Interchange. Standard for coding of characters
DC	Direct current
Default value	Factory setting.
Direction of rotation	Rotation of the motor shaft in a clockwise or counterclockwise direction of rotation. Clockwise rotation is when the motor shaft rotates clockwise as you look at the end of the protruding motor shaft.
DOM	The **D**ate **o**f **m**anufacturing on the nameplate of the device is shown in the format DD.MM.YY, e.g. 31.12.06 (December 31, 2006).
EMC	Electromagnetic compatibility
Encoder	Sensor for detection of the angular position of a rotating component. The motor encoder shows the angular position of the rotor.
Error class	Classification of errors into groups. The different error classes allow for specific responses to faults, e.g. by severity.
Fatal error	In the case of fatal error, the drive is not longer able to control the motor, so that an immediate switch-off of the drive is necessary.
Fault	Operating state of the drive caused as a result of a discrepancy between a detected (computed, measured or signaled) value or condition and the specified or theoretically correct value or condition.
Fault reset	A function used to restore the drive to an operational state after a detected fault is cleared by removing the cause of the fault so that the fault is no longer active (transition from state "Fault" to state "Operation Enable").
Forcing	Forcing switching states of inputs/outputs.Forcing switching states of inputs/outputs.
I/O	Inputs/outputs
Inc	Increments
Index pulse	Signal of an encoder to reference the rotor position in the motor. The encoder returns one index pulse per revolution.
Limit switch	Switch that signals overtravel of the permissible range of travel.
Motor phase current	The available torque of a stepper motor is determined by the motor phase current. The higher the motor phase current the higher the torque.
Node guarding	Monitoring of the connection with the slave at an interface for cyclic data traffic.
Parameter	Device data and values that can be set by the user.
Parameter switch	Small switches adjacent to each other
Persistent	Indicates whether the value of the parameter remains in the memory after the device is switched off.
PLC	Programmable logic controller

0198441113556, V2.00, 09.2008

Power stage	The power stage controls the motor. The power stage generates currents for controlling the motor on the basis of the positioning signals from the controller.
PWM	Pulse width modulation
Quick Stop	Function used to enable fast deceleration of the motor via a command or in the event of a malfunction.
RS485	Fieldbus interface as per EIA-485 which enables serial data transmission with multiple devices.
Stall detection	Stall detection monitors whether the index pulse is always correctly triggered at the same angle position of the motor shaft.
Torque ramp	Deceleration of the motor with the maximum possible deceleration, which is only limited by the maximum permissible current. The higher the permissible braking current, the stronger the deceleration. Because energy is recovered up depending on the coupled load, the voltage may increase to excessively high values. In this case the maximum permissible current must be reduced.
Warning	If not used within the context of safety instructions, a warning alerts to a potential problem detected by a monitoring function. A warning is not a fault and does not cause a transition of the operating state. Warnings belong to error class 0.
Watchdog	Unit that monitors cyclic basic functions in the product. Power stage and outputs are switched off in the event of faults.
Zero voltage window	Voltage range that is interpreted as 0 V.

0198441113556, V2.00, 09.2008

14 Index

Numerics

24V signal interface
- Cable specifications and terminal 62
- Connecting 62
- Function 63
- Setting functions 77
- starting 77
- testing function of limit switches 78

24V signals
- testing 77

A

Abbreviations 155
Accessories and spare parts 147
Address and baud rate
- Fieldbus interface RS485 61

Air humidity 25
Ambient conditions 25
- Air humidity operation 25
- Operation 25
- Relative air humidity operation 25
- Transportation and storage 25

Axis signals
- Moving away from switch 88
- REF 88
- STOP 89

Axis signals, monitoring signals 88

B

Before you begin
- Safety information 19

C

Cable specifications
- Protected cable installation 42

Cable specifications and terminal
- 24V signal interface 62
- Fieldbus interface RS485 61
- Multifunction interface 59
- Safety function STO 65
- Supply voltage 57

Cables, assembling 53
Category 0 stop 40
Category 1 stop 40
Certifications 25
Classical jog 110
Commissioning 71
- 24V signal interface 77
- checking safety functions 81
- Optimizing motion behavior 82
- Phase current settings 80

0198441113556, V2.00, 09.2008

preparation 73
running 74
testing function of limit switches 78
Torque characteristic 83
Commissioning software 84, 147
Online help 84
Commissioning software Lexium CT 84
Components and interfaces 11
Config 135

D

DataSet 135
Declaration of conformity 16
Definition
STO 40
Definition of direction of rotation 118
Diagnostics 127
dimensional drawing, see dimensions
Dimensions 29
Direction of rotation, definition of 118
Disposal 149, 151
Documentation and literature references 15

E

Electrical installation 50
EMC 46
EPLAN Macros 15, 147
Equipotential bonding conductors 39, 47
Error class 128
Error classes 128
Error indication 127
Error numbers 129
Error response 128
Meaning 128
External axis signals 88
External power supply unit 37

F

Fault reset 128
Fieldbus interface RS485
Address and baud rate 61
Cable specifications and terminal 61
Function 61
Function
Fieldbus interface RS485 61
Functional safety 22, 35
Functions 118
Definition of direction of rotation 118
Programmable inputs/outputs 120
Quick Stop 119
scaling 85
travel profile 118
Functions of the commissioning software 84

0198441113556, V2.00, 09.2008

G

Glossary 153

H

Hazard categories 20
Homing 113, 136
    Position setting 117
Humidity 25

I

I/O 137
Installation
    electrical 50
    mechanical 47
Installation, electrical
    Assembling cables 53
    Connecting 24V signal interface 62
    Connecting supply voltage 56
Intended use 19
Introduction 9

J

Jog 109

L

Lexium CT commissioning software 84
Limit switches
    testing function 78

M

Macros EPLAN 15, 147
Maintenance 149
Manual 138
manuals 15
Max. humidity operation 25
Mechanical installation 47
Monitoring functions 44
Monitoring signals, external 88
    Axis signals
        REF 88
        STOP 89
    Moving away from switch 88
Monitoring signals, internal 90
Motion 135, 138
Motion behavior optimization 82
Motor
    Optimizing motion behavior 82
    Phase current settings 80
    Ramp slope 82
    Torque characteristic 83
Mounting position 28
Moving away from limit switch range 110
Moving away from switch 88

0198441113556, V2.00, 09.2008

Multifunction interface
Cable specifications and terminal 59

N

Name plate 13

O

Operating mode
Homing 113
homing 113
jog 109
profile position 111
Operating modes 109
Operating state
Read 92
Operating States 91
Operation 87
Operation ambient temperature 25
Optimizing the motor behavior 82

P

Parameter
Representation 133
Parameter group
Config 135
DataSet 135
Homing 136
I/O 137
Manual 138
Motion 138
motion 135
ProgIO0 139
PTP 140
RS485 141
Settings 141
Status 142
Parameter values, default 87
Parameters 133
overview 134
Phase current settings 80
Position setting 117
Positioning limits 89
Positioning range 89
Positioning resolution 89
product manuals 15
Profile generator 118
Profile position 111
ProgIO0 139
Programmable inputs/outputs 120
Protected cable installation 42
PTP 140

Q

Qualification of personnel 19

0198441113556, V2.00, 09.2008

Quick Stop 119

R

Ramp slope 82
REF 88
Reference movement
    To limit switch 114
Relative air humidity 25
Reset error message 128
RS485 141

S

Safe Torque Off 40
    Definition 40
Safety disconnect moment 40
Safety function 40
    Application examples 43
    Category 0 stop 40
    Category 1 stop 40
    Definition 40
    Definitions 40
    Requirements 41
Safety function STO
    Cable specifications and terminal 65
Scaling 85
Service 149
Service address 150
Settings 141
Shipping 151
Source
    Commissioning software 84, 147
    EPLAN Macros 15, 147
    product manuals 15
Stall detection 90
State transitions 91
Status 142
Status information
    Operating-mode-specific 93
    Other 94
STO 40
    Application examples 43
    Definitions 40
    Requirements 41
STOP 89
Storage 151
Supply voltage
    Cable specifications and terminal 57
    Connecting 56
System requirements 84

T

Technical data 25
Temperature during operation 25
Terms 155

0198441113556, V2.00, 09.2008

Testing safety functions 81
Travel profile 118
Troubleshooting 127
Type code 14

U

Unit overview 9
Units and conversion tables 153

0198441113556, V2.00, 09.2008