Product data sheet

Specifications

integrated drive ILS with stepper motor - 24..36 V - CANopen DS301 - 5 A

ILS1F852PB1A0

Product availability: Non-Stock - Not normally stocked in distribution facility

Main

Range of Product	Lexium integrated drive
Product or Component Type	Motion integrated drive
Device short name	ILS
Motor Type	3-phase stepper motor
Number of motor poles	6
Phase	Single phase
[Us] rated supply voltage	24 V 36 V
Network type	DC
Communication interface	CANopen DS301, Integrated
Length	6.7 in (170.6 mm)
Winding type	Medium speed of rotation and medium torque
Electrical Connection	Printed circuit board connector
Holding brake	Without
Gear box type	Without
Nominal speed	100 rpm 24 V 200 rpm 36 V
Nominal torque	35.4 lbf.in (4 N.m)
Holding torque	35.4 lbf.in (4 N.m)

Complementary

Transmission Rate	50, 100, 125, 250, 500, 800 and 1000 kbauds
Mounting Support	Flange 85 mm
Motor flange size	3.3 in (85 mm)
Number of motor stacks	2
Centring collar diameter	2.4 in (60 mm)
Centring collar depth	0.08 in (2 mm)
Number of mounting holes	4
Mounting holes diameter	0.3 in (6.5 mm)
Circle diameter of the mounting holes	3.9 in (99 mm)
Feedback type	Index pulse
Shaft end	Untapped

Price is “List Price” and may be subject to a trade discount – check with your local distributor or retailer for actual price.

Disclaimer: This documentation is not intended as a substitute for and is not to be used for determining suitability or reliability of these products for specific user applications

Second shaft	Without second shaft end
Shaft diameter	0.5 in (12 mm)
Shaft length	1.2 in (30 mm)
Supply voltage limits	18…40 V
Current consumption	5000 mA maximum
Associated fuse rating	10 A
Input/output type	4 signals (each be used as input or output)
Voltage state 0 guaranteed	-3...4.5 V
Voltage state 1 guaranteed	15...30 V
Discrete input current	10 mA at 24 V on/STO_A safety input 3 mA at 24 V on/STO_B safety input 2 mA at 24 V 24 V signal interface
Discrete output voltage	23...25 V
Maximum switching current	100 mA per output 200 mA total
Protection Type	Overload of output voltage Short circuit of the output voltage Safe torque off
Peak stall torque	35.4 lbf.in (4 N.m)
Continuous stall torque	35.4 lbf.in (4 N.m)
Speed feedback resolution	20000 points/turn
Accuracy error	+/- 6 arc min
Rotor inertia	2.2 kg.cm²
Maximum mechanical speed	1500 rpm
Maximum radial force Fr	100 N
Maximum axial force Fa	170 N tensile force) 30 N force pressure)
Service life in hours	20000 h bearing
Marking	CE
Type of cooling	Natural convection
Product Weight	7.9 lb(US) (3.6 kg)

Environment

Standards	IEC 50347 EN 61800-3:2001, second environment EN 61800-3 : 2001-02 IEC 61800-3, Ed 2 IEC 61800-3 IEC 60072-1 IEC 50178
Product Certifications	UL cUL TÜV
Ambient air temperature for operation	122…149 °F (50…65 °C) (with power derating of 2 % per °C) 32…122 °F (0…50 °C) (without derating)
Permissible ambient air temperature around the device	221 °F (105 °C) power amplifier 230 °F (110 °C) motor
Ambient Air Temperature for Storage	-13…158 °F (-25…70 °C)

Operating altitude	<= 3280.84 ft (1000 m) without derating
Relative humidity	15…85 % without condensation
Vibration resistance	20 m/s² 10…500 Hz) 10 cycles IEC 60068-2-6
Shock resistance	150 m/s² 1000 shocks IEC 60068-2-29
IP degree of protection	IP41 shaft bushing: conforming to IEC 60034-5 IP54 total except shaft bushing: conforming to IEC 60034-5

Ordering and shipping details

Category	US1PC5618288
Discount Schedule	PC56
GTIN	3389119227148
Returnability	No
Country of origin	DE

Packing Units

Unit Type of Package 1	PCE
Nbr. of units in pkg.	1
Package 1 Height	7.677 in (19.500 cm)
Package 1 Width	8.661 in (22.000 cm)
Package 1 Length	15.748 in (40.000 cm)
Package weight(Lbs)	10.258 lb(US) (4.653 kg)
Unit Type of Package 2	S04
Number of Units in Package 2	2
Package 2 Height	11.8 in (30 cm)
Package 2 Width	15.7 in (40 cm)
Package 2 Length	23.6 in (60 cm)
Package 2 Weight	21.949 lb(US) (9.956 kg)
Unit Type of Package 3	P06
Number of Units in Package 3	8
Package 3 Height	29.528 in (75.000 cm)
Package 3 Width	31.496 in (80.000 cm)
Package 3 Length	23.622 in (60.000 cm)
Package 3 Weight	105.434 lb(US) (47.824 kg)

Contractual warranty

Warranty (in months)	18

Environmental Data

Schneider Electric aims to achieve Net Zero status by 2050 through supply chain partnerships, lower impact materials, and circularity via our ongoing “Use Better, Use Longer, Use Again” campaign to extend product lifetimes and recyclability.

Environmental Data explained

How we assess product sustainability

Environmental footprint

Total lifecycle Carbon footprint	**698 kg CO2 eq.**
Carbon footprint of the manufacturing phase [A1 to A3]	**55 kg CO2 eq.**
Carbon footprint of the distribution phase [A4]	**7 kg CO2 eq.**
Carbon footprint of the installation phase [A5]	**2 kg CO2 eq.**
Carbon footprint of the use phase [B2, B3, B4, B6]	**629 kg CO2 eq.**
Carbon footprint of the end-of-life phase [C1 to C4]	**5 kg CO2 eq.**
Environmental Disclosure	**Product Environmental Profile**

Use Better

Materials and Substances

Packaging made with recycled cardboard	**Yes**
Packaging without single use plastic	**No**
SCIP Number	**F800009a-26ea-46d4-b613-164e8055f98f**
EU RoHS Directive	**Compliant By Exemption**
REACh Regulation	**Reference contains Substances of Very High Concern above the threshold**
California proposition 65	**WARNING: This product can expose you to chemicals including: Lead and lead compounds, which is known to the State of California to cause cancer and birth defects or other reproductive harm. For more information go to www.P65Warnings.ca.gov**
PVC free	**Yes**

Use Longer

Lifetime extension

Repair	**No**

Use Again

Repack and remanufacture

Recyclability potential, in %	**85**
Circularity Profile	**End of Life Information**
Take-back	**No**
WEEE Label	**The product must be disposed on European Union markets following specific waste collection and never end up in rubbish bins.**

Dimensions

Integrated Drive without Holding Brake

Dimensions

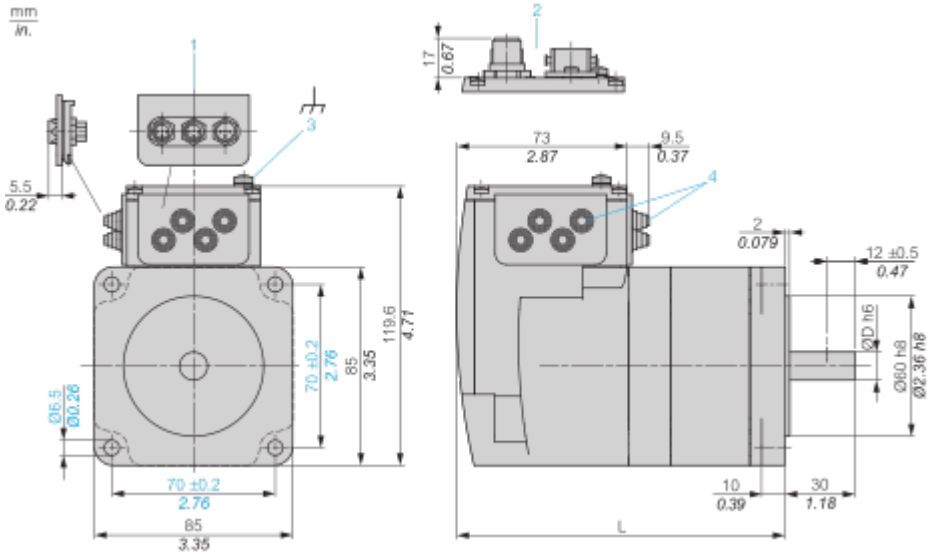

1 : Accessories: I/O signal insert with industrial connectors
2 : Option: industrial connectors
3 : Earth (ground) terminal
4 : Accessories: cable entries Ø = 3 ... 9 mm/0.12 ... 0.35 in.
L : 170.6 mm/6.72 in.
D : 12 mm/0.47 in.

Wiring

Connection Example with 4 I/O Signals

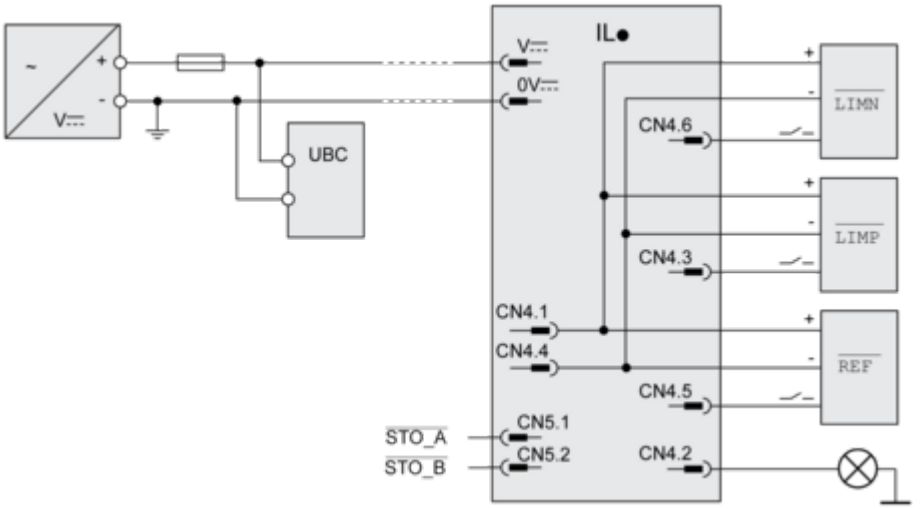

PerformanceCurves

Torque Characteristics

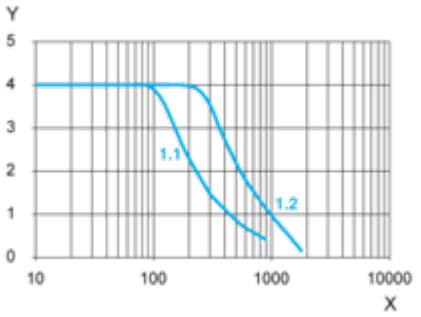

X Speed of rotation in rpm
Y Torque in Nm
1.1 Max. torque at 24 V
1.2 Max. torque at 36 V

Technical Illustration

Dimensions

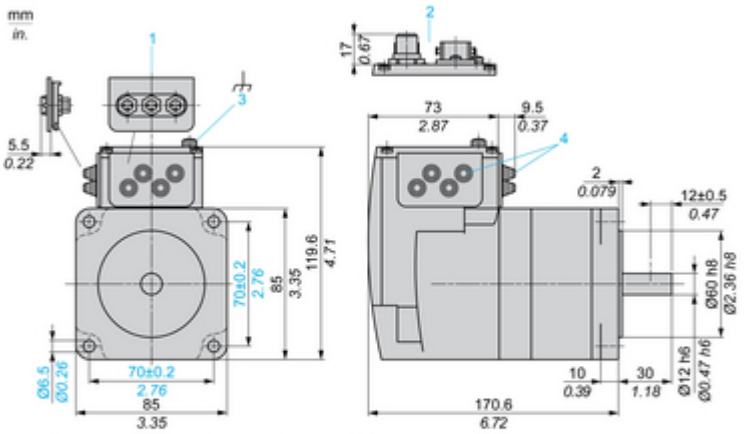

(1) Accessories: I/O signal insert with industrial connectors
(2) Option: industrial connectors
(3) Earth (ground) terminal
(4) Accessories: cable entries Ø = 3 ... 9 mm/0.12 ... 0.35 in.

Technical Illustration

Wiring diagram
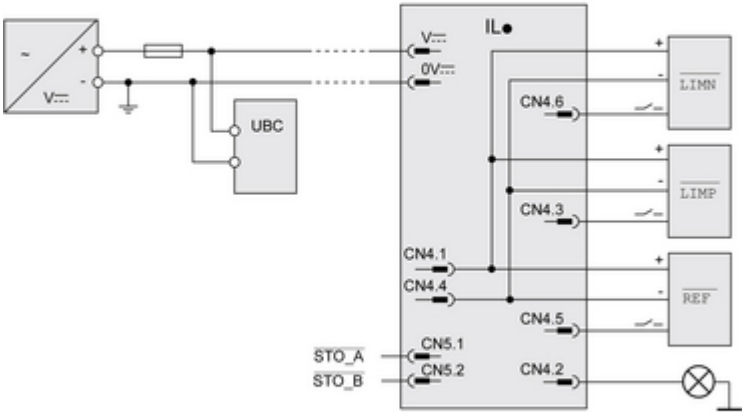
Connection Example with 4 I/O Signals