Harmony S-Panel PC and Enclosed PC Performance

User Manual

10/2020

EIO0000002040.07

www.schneider-electric.com

The information provided in this documentation contains general descriptions and/or technical characteristics of the performance of the products contained herein. This documentation is not intended as a substitute for and is not to be used for determining suitability or reliability of these products for specific user applications. It is the duty of any such user or integrator to perform the appropriate and complete risk analysis, evaluation and testing of the products with respect to the relevant specific application or use thereof. Neither Schneider Electric nor any of its affiliates or subsidiaries shall be responsible or liable for misuse of the information contained herein. If you have any suggestions for improvements or amendments or have found errors in this publication, please notify us.

You agree not to reproduce, other than for your own personal, noncommercial use, all or part of this document on any medium whatsoever without permission of Schneider Electric, given in writing. You also agree not to establish any hypertext links to this document or its content. Schneider Electric does not grant any right or license for the personal and noncommercial use of the document or its content, except for a non-exclusive license to consult it on an "as is" basis, at your own risk. All other rights are reserved.

All pertinent state, regional, and local safety regulations must be observed when installing and using this product. For reasons of safety and to help ensure compliance with documented system data, only the manufacturer should perform repairs to components.

When devices are used for applications with technical safety requirements, the relevant instructions must be followed.

Failure to use Schneider Electric software or approved software with our hardware products may result in injury, harm, or improper operating results.

Failure to observe this information can result in injury or equipment damage.

© 2020 Schneider Electric. All rights reserved.

Table of Contents

	Safety Information	7
	About the Book	9
Chapter 1	**Important Information**	19
	FCC Radio Frequency Interference Statement for USA	20
	Certifications and Standards	21
Chapter 2	**Physical Overview**	23
	Package Contents	24
	S-Panel PC Description	25
	Enclosed PC Description	29
Chapter 3	**Characteristics**	33
	Characteristics	34
	Interface Characteristics	36
	Environmental Characteristics	38
Chapter 4	**Dimensions / Installation**	39
	Dimensions	40
	Installation Requirements	42
	Installation	46
Chapter 5	**Getting Started**	51
	First Power Up	51
Chapter 6	**Connections**	55
	Grounding	56
	Connecting the DC Power Cord of the S-Panel PC	60
	Connecting the DC Power Cord of the Enclosed PC	62
	AC Power Supply S-Panel PC Description	64
	S-Panel PC Interface Connections	69
	Enclosed PC Interface Connections	71
Chapter 7	**Configuration of the Boot**	73
7.1	S-Panel PC BIOS	74
	S-Panel PC **Main** Menu	75
	S-Panel PC **Advanced** Menu	76
	S-Panel PC **Chipset** Menu	80
	S-Panel PC **Boot** Menu	82
	S-Panel PC **Security** Menu	83
	S-Panel PC **Save & Exit** Menu	84

7.2 Enclosed PC BIOS 85
Enclosed PC **Main** Menu 86
Enclosed PC **Advanced** Menu 87
Enclosed PC **Chipset** Menu 91
Enclosed PC **Boot** Menu 93
Enclosed PC **Security** Menu 94
Enclosed PC **Save & Exit** Menu 95
Chapter 8 Hardware Modifications 97
8.1 Before Modifications 98
Before Making Modifications 98
8.2 Storages Modifications 100
HDD/SSD Drive Description and Installation 101
Memory Card Installation 106
8.3 Optional Cards and Optional Interfaces 109
Optional Interface Installation 110
16DI/8DO Interface Description 116
RS-232, RS-422/485 Interface Description 122
Ethernet IEEE Interface Description 133
Audio Interface Description 136
CANopen Interface Description 140
Profibus DP Interface Description 144
Wireless LAN Interface Card Description 147
USB Interface Description 152
NVRAM Card Description 155
GPRS Interface Description 157
VGA and DVI Interface Description 161
4G (mini PCIe) Interface Description 169
Chapter 9 System Monitor 177
System Monitor Interface 178
Device Management - Monitoring Rules 184
Monitor Account Setting 204
Monitor System Setting 207
Chapter 10 User Interface 211
Touch Screen Calibration 211
Chapter 11 Software API 213
Intelligent Management for Embedded Platform 213

Chapter 12 Maintenance 215
Reinstallation Procedure 216
Regular Cleaning and Maintenance 217
Appendices 219
Appendix A Accessories 221
Accessories for the S-Panel PC 221
Index 223

Safety Information

Important Information

NOTICE

Read these instructions carefully, and look at the equipment to become familiar with the device before trying to install, operate, service, or maintain it. The following special messages may appear throughout this documentation or on the equipment to warn of potential hazards or to call attention to information that clarifies or simplifies a procedure.

The addition of this symbol to a “Danger” or “Warning” safety label indicates that an electrical hazard exists which will result in personal injury if the instructions are not followed.

This is the safety alert symbol. It is used to alert you to potential personal injury hazards. Obey all safety messages that follow this symbol to avoid possible injury or death.

DANGER

DANGER indicates a hazardous situation which, if not avoided, **will result in** death or serious injury.

WARNING

WARNING indicates a hazardous situation which, if not avoided, **could result in** death or serious injury.

CAUTION

CAUTION indicates a hazardous situation which, if not avoided, **could result** in minor or moderate injury.

NOTICE

NOTICE is used to address practices not related to physical injury.

PLEASE NOTE

Electrical equipment should be installed, operated, serviced, and maintained only by qualified personnel. No responsibility is assumed by Schneider Electric for any consequences arising out of the use of this material.

A qualified person is one who has skills and knowledge related to the construction and operation of electrical equipment and its installation, and has received safety training to recognize and avoid the hazards involved.

⚠ ⚠ DANGER

HAZARD OF ELECTRIC SHOCK

- Do not open product.
- Product to be serviced by qualified people only.

Failure to follow these instructions will result in death or serious injury.

⚠ WARNING

UNAUTHENTICATED ACCESS AND SUBSEQUENT UNAUTHORIZED MACHINE OPERATION

- Evaluate whether your environment or your machines are connected to your critical infrastructure and, if so, take appropriate steps in terms of prevention, based on Defense-in-Depth, before connecting the automation system to any network.
- Limit the number of devices connected to a network to the minimum necessary.
- Isolate your industrial network from other networks inside your company.
- Protect any network against unintended access by using firewalls, VPN, or other, proven security measures.
- Monitor activities within your systems.
- Prevent subject devices from direct access or direct link by unauthorized parties or unauthenticated actions.
- Prepare a recovery plan including backup of your system and process information.

Failure to follow these instructions can result in death, serious injury, or equipment damage.

About the Book

At a Glance

Document Scope

This manual describes the configuration and usage of the S-Panel PC Performance and Enclosed PC Performance, part of the range of Harmony Industrial PC, for its cataloged and configured product offers.

The S-Panel PC is designed to operate in an industrial environment.

1 **Cataloged product offer:**

- HMIPSPH752D1801 - S-Panel PC Performance HDD W15” DC - Win 10
  - 24 Vdc
  - W15” HD TFT LED LCD multi-touch screen
  - 1.7 GHz i3-4010U processor
  - 8 GB SDRAM
  - 500 GB Hard disk drive (HDD)
  - Windows® 10 IoT Enterprise 2016 LTSB/2019 LTSC (64 bit En MUI)[*1]
  - 1 mini PCIe
- HMIPSPH752D1701 - S-Panel PC Performance HDD W15” DC - Win 7
  - 24 Vdc
  - W15” HD TFT LED LCD multi-touch screen
  - 1.7 GHz i3-4010U processor
  - 8 GB SDRAM
  - 500 GB Hard disk drive (HDD)
  - Windows® 7 Ultimate SP1 (64 bit En MUI)
  - 1 mini PCIe
- HMIPSPS752D1701 - S-Panel PC Performance SSD W15” DC - Win 7
  - 24 Vdc
  - W15” HD TFT LED LCD multi-touch screen
  - 1.7 GHz i3-4010U processor
  - 8 GB SDRAM
  - 128 GB Flash drive (SSD)
  - Windows® 7 Ultimate SP1 (64 bit En MUI)
  - 1 mini PCIe
- HMIPSPS752D1801 - S-Panel PC Performance SSD W15” DC - Win 10
  - 24 Vdc
  - W15” HD TFT LED LCD multi-touch screen
  - 1.7 GHz i3-4010U processor
  - 8 GB SDRAM

- 128 GB Flash drive (SSD)
- Windows® 10 IoT Enterprise 2016 LTSB/2019 LTSC (64 bit En MUI)[*1]
- 1 mini PCIe

- HMIPSPC752D1W01 - S-Panel PC Performance W15” DC - WES
  - 24 Vdc
  - W15” HD TFT LED LCD multi-touch screen
  - 1.7 GHz i3-4010U processor
  - 8 GB SDRAM
  - 32 GB CFast card
  - Windows® Embedded Standard 7 SP1 (64 bit En MUI)
  - 1 mini PCIe
- HMIPSP0752D1001 - S-Panel PC Performance W15” DC - Base unit
  - 24 Vdc
  - W15” HD TFT LED LCD multi-touch screen
  - 1.7 GHz i3-4010U processor
  - 8 GB SDRAM
  - 1 mini PCIe
- HMIPSPH952D1801 - S-Panel PC Performance HDD W19” DC - Win 10
  - 24 Vdc
  - W19” HD TFT LED LCD multi-touch screen
  - 1.7 GHz i3-4010U processor
  - 8 GB SDRAM
  - 500 GB Hard disk drive (HDD)
  - Windows® 10 IoT Enterprise 2016 LTSB/2019 LTSC (64 bit En MUI)[*1]
  - 1 mini PCIe
- HMIPSPH952D1701 - S-Panel PC Performance HDD W19” DC - Win 7
  - 24 Vdc
  - W19” HD TFT LED LCD multi-touch screen
  - 1.7 GHz i3-4010U processor
  - 8 GB SDRAM
  - 500 GB Hard disk drive (HDD)
  - Windows® 7 Ultimate SP1 (64 bit En MUI)
  - 1 mini PCIe
- HMIPSPS952D1801 - S-Panel PC Performance SSD W19” DC - Win 10
  - 24 Vdc
  - W19” HD TFT LED LCD multi-touch screen
  - 1.7 GHz i3-4010U processor
  - 8 GB SDRAM
  - 128 GB Flash drive (SSD)
  - Windows® 10 IoT Enterprise 2016 LTSB/2019 LTSC (64 bit En MUI)[*1]
  - 1 mini PCIe

- HMIPSPS952D1701 - S-Panel PC Performance SSD W19” DC - Win 7
  - 24 Vdc
  - W19” HD TFT LED LCD multi-touch screen
  - 1.7 GHz i3-4010U processor
  - 8 GB SDRAM
  - 128 GB Flash drive (SSD)
  - Windows® 7 Ultimate SP1 (64 bit En MUI)
  - 1 mini PCIe
- HMIPSPC952D1W01 - S-Panel PC Performance W19” DC - WES
  - 24 Vdc
  - W19” HD TFT LED LCD multi-touch screen
  - 1.7 GHz i3-4010U processor
  - 8 GB SDRAM
  - 32 GB CFast card
  - Windows® Embedded Standard 7 SP1 (64 bit En MUI)
  - 1 mini PCIe
- HMIPSP0952D1001 - S-Panel PC Performance W19” DC - Base unit
  - 24 Vdc
  - W19” HD TFT LED LCD multi-touch screen
  - 1.7 GHz i3-4010U processor
  - 8 GB SDRAM
  - 1 mini PCIe
- HMIPEPS952D1801 - Enclosed PC Performance SSD W19” DC - Win 10
  - 24 Vdc
  - W19” HD TFT LED LCD multi-touch screen
  - 1.7 GHz i3-4010U processor
  - 8 GB SDRAM
  - 128 GB Flash drive (SSD)
  - Windows® 10 IoT Enterprise 2016 LTSB/2019 LTSC (64 bit En MUI)*1
  - 1 mini PCIe
- HMIPEP0952D1001 - Enclosed PC Performance W19” DC - Base unit
  - 24 Vdc
  - W19” HD TFT LED LCD multi-touch screen
  - 1.7 GHz i3-4010U processor
  - 8 GB SDRAM
  - 1 mini PCIe

*1:

- Windows 10 IoT Enterprise 2016 LTSB: SV: 7.0 or less
- Windows 10 IoT Enterprise 2019 LTSC: SV: 8.0 or more

NOTE: The part number for your unit may not be included in the user manual. Commercial part numbers listed in the user manual are for products available when the user manual was published. New part numbers may be added to the product range.

New and existing cataloged part numbers are always composed of a prefix (HMI) followed by a serial arrangement of 12 alphanumeric characters. Each one of the twelve characters matches with one characteristic of the cataloged S-Panel PC, such as storage device size, storage device type, memory size, and bundled software.

Use the following legend to identify the features that correspond with each character of the part number:

Character number	**Prefix**	**1**	**2**	**3**	**4**	**5**	**6**	**7**	**8**	**9**	**10**	**11**	**12**
Part number example	**HMI**	**P**	**S**	**P**	**H**	**9**	**5**	**2**	**D**	**1**	**8**	**0**	**1**
Range name	S-Panel PC												
iPC family		P											
Type	Simple		S										
	Enclosed		E										
Version	Performance			P									
Drive	Hard disk drive (HDD)				H								
	Flash drive (SSD)				S								
	CFast card (CF)				C								
	None				0								
Screen size	W15” HD TFT LED LCD					7							
	W19” HD TFT LED LCD					9							
Screen type	Wide						5						
Screen type	Premium							2					
Power supply	DC								D				
Expansion slots	One									1			
Operating system	Windows® 10 IoT Enterprise 2016 LTSB/2019 LTSC (64 bit En MUI)*1										8		
	Windows® 7 Ultimate SP1 (64 bit En MUI)										7		
	Windows® Embedded Standard 7 SP1 (64 bit En MUI)										W		
	None										0		
Bundled software	None											0	
Hardware iteration	Initial												1

*1:
- Windows 10 IoT Enterprise 2016 LTSB: SV: 7.0 or less
- Windows 10 IoT Enterprise 2019 LTSC: SV: 8.0 or more

2 Configured product offer:

In addition to the catalog offer, other configurations may be available in some countries.

These configured offers use a fixed method of identification. The configured part numbers are always composed of an arrangement of 20 alphanumeric characters. The first 6 characters are always **HMIPCC**. The remaining 14 characters match with one characteristic of the configured Panel PC controller, such as storage device size, storage device type, memory size, and bundled software.

The configured offers have similar characteristics and functionalities as the cataloged offer described in this manual.

In addition to this part number, a configuration number is printed on the product label.

The configuration number format is as follows:

Character number	Prefix (1-6)	7	8	9	10	11	12	13	14	15	16	17	18	19	20
Part number example	HMI PCC	S	2	H	N	3	D	8	0	N	2	N	X	0	0
iPC family	Simple and enclosed panel PC	S													
Product generation	Second generation		2												
Display	S-Panel PC W15” - WHD			H											
	S-Panel PC W19” - WHD			K											
	Enclosed PC W19” - WHD			M											
Modular Box PC	None				N										
CPU type	Core i3-4010U - 1.7 GHz					3									
Power supply	DC						D								
RAM	8 GB							8							
	16 GB							A							
Operating system	None								0						
	Windows® Embedded Standard 7 SP1 (64 bit En MUI))								4						
	Windows® 7 Ultimate SP1 (64 bit En MUI)								6						
	Windows® Embedded 8.1 Industry (64 bit En MUI)								8						
	Windows® 10 IoT Enterprise 2016 LTSB/2019 LTSC (64 bit En MUI)*1								B						

*1:
- Windows 10 IoT Enterprise 2016 LTSB: SV: 7.0 or less
- Windows 10 IoT Enterprise 2019 LTSC: SV: 8.0 or more

Character number	Prefix (1-6)	7	8	9	10	11	12	13	14	15	16	17	18	19	20
Part number example	HMI PCC	S	2	H	N	3	D	8	0	N	2	N	X	0	0
Storage device	None									N					
	HDD 500 GB									C					
	HDD 1 TB									E					
	SSD 128 GB									G					
	SSD 256 GB									H					
Options	None										0				
	Interface - NVRAM										1				
	Interface - 2 x RS 422/485 isolated										2				
	Interface - 4 x RS 422/485										3				
	Interface - 2 x USB 3.0										4				
	Interface - 2 x RS 232 isolated										5				
	Interface - 4 x RS 232										6				
	Interface - 16 x DI / 8 x DO										8				
	Interface - Audio										A				
	Interface - 1 x GPRS/GSM										D				
	Internal USB wireless LAN board and antennas										E				
	Interface - 2 x CANopen CANBus										G				
	Interface - 1 x PROFIBUS DP master NVRAM										J				
	Interface - 4G for US										M				
	Interface - 4G for EU/ASIA										N				
	Interface - DVI-I										U				
	Interface - 2 x VGA										X				
	Interface - DVI-D										W				
Second storage	None											N			
Software bundle	None												N		
	EcoStruxure Operator Terminal Expert RT unlimited license												X		
	EcoStruxure Machine SCADA Expert runtime 1.5 K license key code												P		
	EcoStruxure Machine SCADA Expert runtime 4 K license key code												M		
	EcoStruxure Machine SCADA Expert runtime 64 K license key code												L		

*1:
- Windows 10 IoT Enterprise 2016 LTSB: SV: 7.0 or less
- Windows 10 IoT Enterprise 2019 LTSC: SV: 8.0 or more

Character number	Prefix (1-6)	7	8	9	10	11	12	13	14	15	16	17	18	19	20
Part number example	**HMI PCC**	**S**	**2**	**H**	**N**	**3**	**D**	**8**	**0**	**N**	**2**	**N**	**X**	**0**	**0**
Reserved	None													0	
Reserved	None														0
*1: ● Windows 10 IoT Enterprise 2016 LTSB: SV: 7.0 or less ● Windows 10 IoT Enterprise 2019 LTSC: SV: 8.0 or more															

NOTE: All instructions applicable to the enclosed product and all safety precautions must be observed.

Validity Note

This documentation is valid for this product.

The technical characteristics of the devices described in the present document also appear online. To access the information online:

Step	Action
1	Go to the Schneider Electric home page *www.schneider-electric.com*.
2	In the **Search** box type the reference of a product or the name of a product range. ● Do not include blank spaces in the reference or product range. ● To get information on grouping similar modules, use asterisks (*).
3	If you entered a reference, go to the **Product Datasheets** search results and click on the reference that interests you. If you entered the name of a product range, go to the **Product Ranges** search results and click on the product range that interests you.
4	If more than one reference appears in the **Products** search results, click on the reference that interests you.
5	Depending on the size of your screen, you may need to scroll down to see the datasheet.
6	To save or print a datasheet as a .pdf file, click **Download XXX product datasheet**.

The characteristics that are described in the present document should be the same as those characteristics that appear online. In line with our policy of constant improvement, we may revise content over time to improve clarity and accuracy. If you see a difference between the document and online information, use the online information as your reference.

Registered trademarks

PL7, EcoStruxure, and Unity are registered trademarks of Schneider Electric.

Microsoft® and Windows® are registered trademarks of Microsoft corporation.

Intel®, and Core i3® are registered trademarks of Intel corporation.

Product Related Information

⚠ DANGER

POTENTIAL FOR EXPLOSION IN HAZARDOUS LOCATION

Do not use these products in hazardous locations.

Failure to follow these instructions will result in death or serious injury.

⚠ WARNING

LOSS OF CONTROL

- The designer of any control scheme must consider the potential failure modes of control paths and, for certain critical control functions, provide a means to achieve a safe state during and after a path failure. Examples of critical control functions are emergency stop and overtravel stop.
- Separate or redundant control paths must be provided for critical control functions.
- System control paths may include communication links. Consideration must be given to the implications of unanticipated transmission delays or failures of the link.(1)
- Each implementation of a Harmony Industrial PC must be individually and thoroughly tested for proper operation before being placed into service.

Failure to follow these instructions can result in death, serious injury, or equipment damage.

(1) For additional information, refer to *NEMA ICS 1.1 (latest edition)*, *"Safety Guidelines for the Application, Installation, and Maintenance of Solid State Control" and to NEMA ICS 7.1 (latest edition),"Safety Standards for Construction and Guide for Selection, Installation and Operation of Adjustable-Speed Drive Systems" or other applicable standards in your location.*

The Display PC multi-touch has a touch screen with projected capacitive touch technology that may operate abnormally when the surface is wet.

⚠ WARNING

LOSS OF CONTROL

- Do not touch the touch screen area during Operating System startup.
- Do not operate when the touch screen surface is wet.
- If the touch screen surface is wet, remove any excessive water with a soft cloth before operation.
- Make sure to use only the authorized grounding configurations shown in the grounding procedure.

Failure to follow these instructions can result in death, serious injury, or equipment damage.

NOTE:

- If a conductive material (water, etc.) is on a touch screen, touch control is disabled to avoid touch input errors. After the conductive material is removed, the touch control will recover automatically.
- Do not touch the touch screen area during Operating System startup since "touch panel firmware" initializes automatically when Windows starts up.

NOTE:
The following characteristics are specific to the LCD and are considered normal behavior:

- LCD screen may show unevenness in the brightness of certain images or may appear different when seen from outside the specified viewing angle. Extended shadows, or cross-talk, may also appear on the sides of screen images.
- LCD screen pixels may contain black and white-colored spots and color display may seem to have changed over time.
- When the same image is displayed on the screen for a long period, an after-image may appear when the image is changed. If this happens, turn off the unit, wait 10 seconds, and then restart it.
- The panel brightness may decrease when used for a long time in an environment continuously filled with inert gas. To prevent deterioration of panel brightness, regularly ventilate the panel.

NOTE: Do not display the same image for a long time. Change the screen image periodically.

NOTE: The S-Panel PC is a highly configurable device and is not based on a real-time operating system. Changes to the software and settings of the following must be considered new implementations as discussed in the previous warning messages. Examples of such changes include:

- System BIOS
- System Monitor
- Operating system
- Installed hardware
- Installed software

⚠ WARNING

UNINTENDED EQUIPMENT OPERATION

Use only Schneider Electric software with the devices described in this manual.

Failure to follow these instructions can result in death, serious injury, or equipment damage.

Cybersecurity Best Practices

To help keep your Schneider Electric products secure and protected, we recommend that you implement the cybersecurity best practices. Following the recommendations may help significantly reduce your company's cybersecurity risk. For the recommendations, refer to the following URL: *https://www.se.com/en/download/document/7EN52-0390/*

Chapter 1
Important Information

General

This chapter describes specific aspects related to the operation of the Harmony S-Panel PC.

What Is in This Chapter?

This chapter contains the following topics:

Topic	Page
FCC Radio Frequency Interference Statement for USA.	20
Certifications and Standards	21

FCC Radio Frequency Interference Statement for USA.

Federal Communications Commission (FCC) Radio Interference Information

This equipment has been tested and found to comply with the federal communications commission (FCC) limits for a Class A digital device, according to Part 15 of the FCC rules. These limits are designed to provide reasonable protection against harmful interference in a commercial, industrial, or business environment. This equipment generates, uses, and can radiate radio frequency energy and, if not installed and used in accordance with the instructions, may cause or be subject to interference with radio communications. To minimize the possibility of electromagnetic interference in your application, observe the following two rules:

- Install and operate the Harmony Industrial PC in such a manner that it does not radiate sufficient electromagnetic energy to cause interference in nearby devices.
- Install and test the Harmony Industrial PC to ensure that the electromagnetic energy generated by nearby devices does not interfere with the Harmony Industrial PC's operation.

Changes or modifications not expressly approved by the party responsible for compliance could void the user’s authority to operate this product.

⚠ WARNING

ELECTROMAGNETIC / INTERFERENCE

Electromagnetic radiation may disrupt the Harmony Industrial PC's operations, leading to unintended equipment operation. If electromagnetic interference is detected:

- Increase the distance between the Harmony Industrial PC and the interfering equipment.
- Reorient the Harmony Industrial PC and the interfering equipment.
- Reroute power and communication lines to the Harmony Industrial PC and the interfering equipment.
- Connect the Harmony Industrial PC and the interfering equipment to different power supplies.
- Always use shielded cables when connecting the Harmony Industrial PC to a peripheral device or another computer.

Failure to follow these instructions can result in death, serious injury, or equipment damage.

Certifications and Standards

Agency Certifications

Schneider Electric submitted this product for independent testing and qualification by third-party agencies. These agencies have certified this product as meeting the following standards:

- Underwriters Laboratories Inc., UL 62368-1 and CSA 62368-1 (Audio/Video, Information and Communication Technology Equipment).
- CCC, RCM, and EAC certification. Refer to product markings.

NOTE: Always refer to the markings on the product to confirm the certifications.

Compliance Standards

Schneider Electric tested this product for compliance with the following compulsory standards:

- United States:
  - Federal Communications Commission, FCC Part 15, Class A
- Europe: CE
  - 2014/35/EU Low Voltage Directive, based on IEC 62368-1 or IEC 61010-2-201
  - 2014/30/EU EMC Directive, class A, based on IEC 61006-2 and IEC 61006-4
- Australia:
  - Standard AS/NZS CISPR11

Qualification Standards

Schneider Electric voluntarily tested this product to additional standards. The additional tests performed, and the standards under which the tests were conducted, are identified in the environmental characteristics.

Hazardous Substances

This product is compliant with:

- WEEE, Directive 2012/19/EU
- RoHS, Directive 2011/65/EU and 2015/863/EU
- RoHS China, Standard GB/T 26572
- REACH regulation EC 1907/2006

NOTE: Documentation about sustainable development is available on Schneider Electric website (Product Environmental Profile and End of Life Instruction, RoHS and REACH certificates).

End of Life (Waste Electrical and Electronic Equipment)

The product contains electronic boards. It must be disposed of in specific treatment channels. The product contains cells and/or storage batteries which must be collected and processed separately when they have run out and at the end of product life 2012/19/EU.

Refer to the section Maintenance to extract cells and batteries from the product. These batteries do not contain a weight percentage of heavy metals over the threshold notified by European Directive 2012/19/EC.

European (CE) Compliance

The products described in this manual comply with the European Directives concerning Electromagnetic Compatibility and Low Voltage (CE marking) when used as specified in the relevant documentation, in applications for which they are intended, and in connection with approved third-party products.

Chapter 2
Physical Overview

Subject of this Chapter

This chapter provides a physical overview of the Harmony S-Panel PC.

What Is in This Chapter?

This chapter contains the following topics:

Topic	Page
Package Contents	24
S-Panel PC Description	25
Enclosed PC Description	29

Package Contents

Items

The following items are included in the package of the Harmony S-Panel PC. Before using the Harmony S-Panel PC, confirm that all items listed here are present:

Enclosed PC/S-Panel PC	
• 10 x installation fasteners for S-Panel PC W15” (10 x screws, 10 x brackets) • 12 x installation fasteners for S-Panel PC W19” (12 x screws, 12 x brackets) • No installation fastener for Enclosed PC	
• Recovery media containing the software required to reinstall the operating system (Microsoft Windows EULA). Additional drivers are in the recovery media • Chinese user manual • **“Before using this product”** flyer • Warning/Caution information • Chinese RoHS flyer	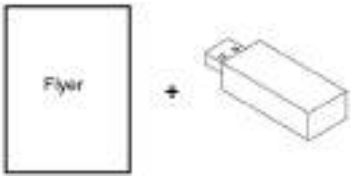
• 1 x wire for chassis ground • 4 x screws for mounting the HDD/SSD S-Panel PC: • 1 x panel gasket • 1 x DC terminal block: 3-pin power connector • 1 x CFast sticker handler for S-Panel PC	

The Harmony S-Panel PC has been carefully packed, with special attention to quality. However, should you find anything damaged or missing, contact your local distributor immediately.

S-Panel PC Description

Introduction

During operation, the surface temperature of the heat sink may exceed 70 °C (158 °F).

⚠ WARNING

RISK OF BURNS

Do not touch the surface of the heat sink during operation.

Failure to follow these instructions can result in death, serious injury, or equipment damage.

The Display PC multi-touch has a touch screen with projected capacitive touch technology that may operate abnormally when the surface is wet.

⚠ WARNING

LOSS OF CONTROL

- Do not touch the touch screen area during Operating System startup.
- Do not operate when the touch screen surface is wet.
- If the touch screen surface is wet, remove any excessive water with a soft cloth before operation.
- Make sure to use only the authorized grounding configurations shown in the grounding procedure.

Failure to follow these instructions can result in death, serious injury, or equipment damage.

NOTE:

- If a conductive material (water, etc.) is on a touch screen, touch control is disabled to avoid touch input errors. After the conductive material is removed, the touch control will recover automatically.
- Do not touch the touch screen area during Operating System startup since "touch panel firmware" initializes automatically when Windows starts up.

S-Panel PC W15” Front View

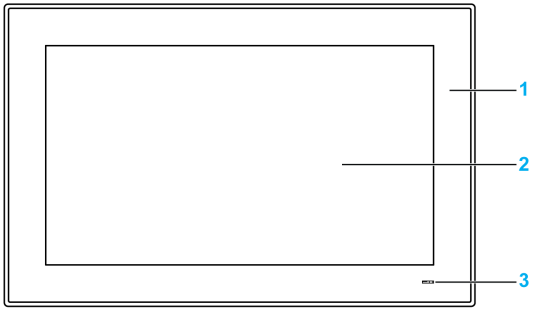

1 Panel
2 Multi-touch panel
3 Status indicator

The table describes the meaning of the status indicator:

Color	State	Meaning
Orange	On	Stand by.
Green	On	S-Panel PC is on.
–	Off	S-Panel PC is off.

S-Panel PC W15” Rear View

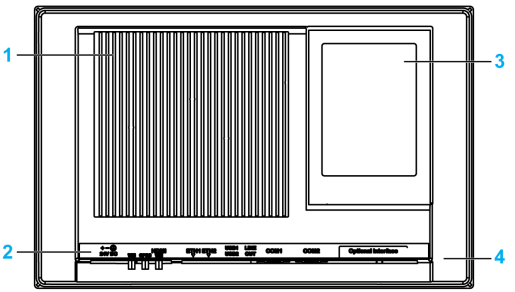

1 Heat sink
2 S-Panel PC interface
3 Back cover for access mini PCIe, HDD/SSD, and CFast
4 Removal cover

NOTE: The cooling method is passive heat sink.

S-Panel PC W15” Bottom View

1 1 x optional interface
2 COM2 port RS-232/422/485
3 COM1 port RS-232
4 Audio line out
5 USB1 (USB 3.0) and USB2 (USB 3.0)
6 Eth2 (10/100/1000 Mbit/s)
7 Eth1 (10/100/1000 Mbit/s)
8 Monitor/Panel, HDMI
9 SMA connector for the wireless LAN external antenna
10 SMA connector for the GPRS/4G external antenna
11 DC power connector

NOTE: Use an extension cable to connect the external antenna.

S-Panel PC W19” Front View

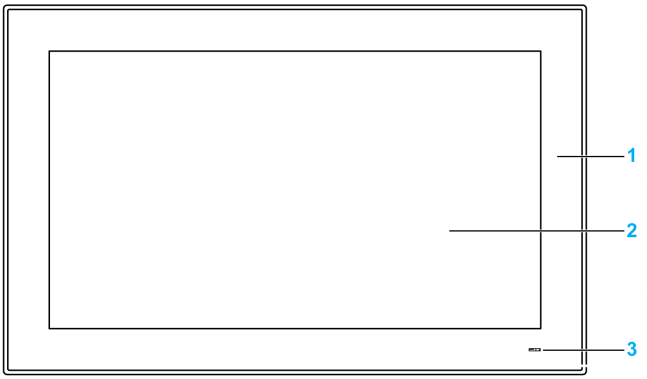

1 Panel
2 Multi-touch panel
3 Status indicator

The table describes the meaning of the status indicator:

Color	State	Meaning
Orange	On	Stand by.
Green	On	S-Panel PC is on.
–	Off	S-Panel PC is off.

S-Panel PC W19” Rear View

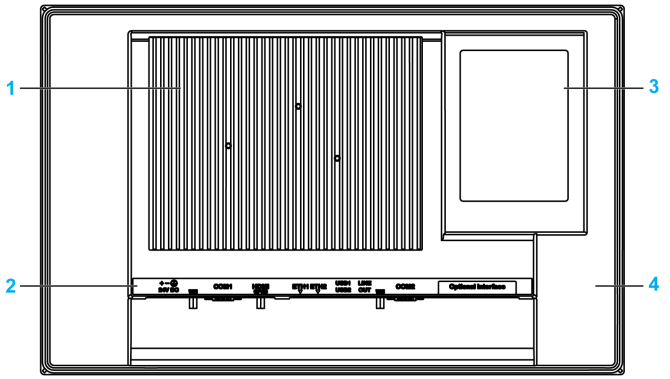

1 Heat sink
2 S-Panel PC interface
3 Back cover for access mini PCIe, HDD/SSD, and CFast
4 Removal cover

NOTE: The cooling method is passive heat sink.

S-Panel PC W19” Bottom View

1 1 x optional interface
2 COM2, port RS-232/422/485
3 SMA connector for the wireless LAN external antenna
4 Audio line out
5 USB1 (USB 3.0) and USB2 (USB 3.0)
6 Eth2 (10/100/1000 Mbit/s)
7 Eth1 (10/100/1000 Mbit/s)
8 SMA connector for the GPRS/4G external antenna (use an extension cable to connect the external antenna when HDMI cable is connected)
9 Monitor/Panel, HDMI
10 COM1, port RS-232
11 DC power connector

Enclosed PC Description

Introduction

The Display PC multi-touch has a touch screen with projected capacitive touch technology that may operate abnormally when the surface is wet.

⚠ WARNING

LOSS OF CONTROL

- Do not touch the touch screen area during Operating System startup.
- Do not operate when the touch screen surface is wet.
- If the touch screen surface is wet, remove any excessive water with a soft cloth before operation.
- Make sure to use only the authorized grounding configurations shown in the grounding procedure.

Failure to follow these instructions can result in death, serious injury, or equipment damage.

NOTE:

- If a conductive material (water, etc.) is on a touch screen, touch control is disabled to avoid touch input errors. After the conductive material is removed, the touch control will recover automatically.
- Do not touch the touch screen area during Operating System startup since "touch panel firmware" initializes automatically when Windows starts up.

Enclosed PC W19” Front View

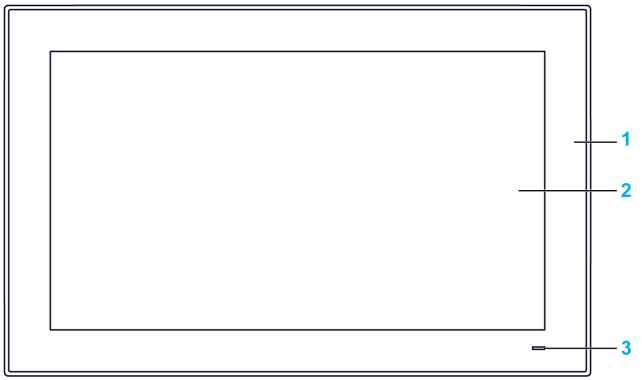

1 Panel
2 Multi-touch panel
3 Status indicator

The table describes the meaning of the status indicator:

Color	State	Meaning
Orange	On	Stand by.
Green	On	Enclosed PC is on.
–	Off	Enclosed PC is off.

Enclosed PC Rear View

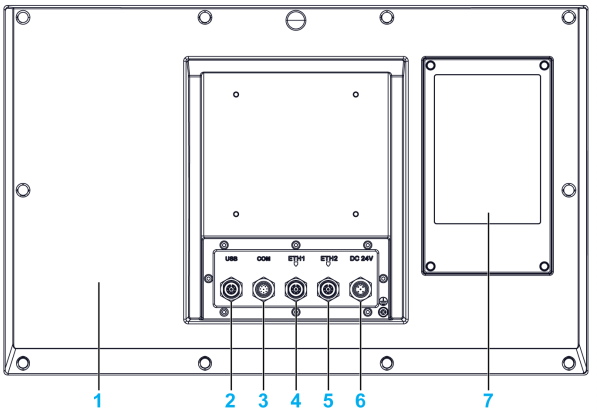

1 Cover
2 USB 2.0 with M12 connector 8-pin female
3 RS-232 with M12 connector 8-pin male
4 ETH1 10/100/1000 base-T with M12 connector 8-pin female
5 ETH2 10/100/1000 base-T with M12 connector 8-pin female
6 DC power with M12 connector 5-pin male
7 Back cover for access HDD/SSD

NOTE: The cooling method is passive heat sink.

NOTE: The Enclosed PC does not support the optional interface.

Chapter 3
Characteristics

Subject of this Chapter

This chapter lists the product characteristics.

What Is in This Chapter?

This chapter contains the following topics:

Topic	Page
Characteristics	34
Interface Characteristics	36
Environmental Characteristics	38

Characteristics

S-Panel PC Characteristics

The characteristics are shown below:

Element	Characteristics	
	S-Panel PC	Enclosed PC
Intel chipset and processor	Core i3-4010U, 1.7 GHz	
Expansion slot	1 x mini PCIe	–
Memory	8 GB, DDR3 1600 MHz, SO-DIMM SDRAM	
Storage memory	1 x CFast slot, 1 x SATA connector	1 x SATA connector
Watch dog timer	255 level timer interval, programmable 1...255 sec (setting through API)	
Buzzer	Yes	
Cooling method	Passive heat sink	
Weight	W15” Panel PC controller: 6 kg (13.22 lbs) W19” Panel PC controller: 7 kg (15.44 lbs)	8 kg (17.63 lbs)

Display Characteristics

Element	15” Screen size	19" Screen size
Display type	TFT LED LCD	
Display size	15.6”	18.5”
Display resolution	HD / FWXGA 1366 x 768 pixel	
Number of colors	16.7 million	
Brightness control	Step less adjustment	
Backlight life	Life span > 50,000 h at 25 °C (77 °F)	
Touch screen light transmission	> 88 %	
Touch screen resolution	4096 x 4096 pixel	
Multi-touch	5 simultaneous touch (projected capacitive)	
Anti-scratch surface	7 H hardness	

DC Power Supply

The following table describes the DC power supply:

Element	Characteristics
Rated voltage	24 Vdc ±20 %
Power consumption	W15” S-Panel PC: 18 W typical, 60 W max W19” S-Panel PC: 28 W typical, 60 W max Enclosed PC: 35 W typical, 60 W max

Operating Systems

Each product is delivered with a preinstalled operating system according to the part number:

Operating Systems
Windows® 10 IoT Enterprise 2019 LTSC 64 bits MUI*1
Windows® 10 IoT Entreprise 2016 LTSB 64 bits MUI*1
Windows® Embedded 8.1 Industry 64 bits MUI
Windows® 7 Ultimate SP1 64 bits MUI
Windows® Embedded Standard 7 (WES7P) SP1 64 bits MUI
*1: ● Windows 10 IoT Enterprise 2016 LTSB: SV: 7.0 or less ● Windows 10 IoT Enterprise 2019 LTSC: SV: 8.0 or more

Interface Characteristics

Serial Interface

Element	Characteristics	
	S-Panel PC	Enclosed PC
Type	1 x RS-232/422/RS-485, (RS-485 with auto data flow control), modem-capable, not electrically isolated and 1 x RS-232 (COM1: RS-232 only)	1 x RS-232, not electrically isolated
Amount	2	1
Transfer rate	Maximum 115.2 kbps	
Connection	D-Sub 9-pin, plug *(see page 69)*	M12 A-coding, 8-pin male *(see page 72)*

USB Interface

Element	Characteristics	
	S-Panel PC	Enclosed PC
Type	USB 3.0	USB 2.0
Amount	2	1
Transfer rate	Low speed (1.5 Mb/s), full speed (12 Mbps), high speed (480 Mbps), and super speed (5 Gbps) USB 3.0 port only	Low speed (1.5 Mb/s), full speed (12 Mbps) and high speed (480 Mbps)
Connection	Type A	M12 A-coding, 8-pin female *(see page 72)*
Current load	Maximum 0.9 A per connection	Maximum 0.5 A per connection

Ethernet Interface

Element	Characteristics	
	S-Panel PC	Enclosed PC
Type	RJ45	M12 A-coding, 8-pin female *(see page 72)*
Amount	2	2
Speed	10/100/1000 Mb/s	
Ethernet controller	I210, I218 supporting IEEE 1588	

HDMI Interface

Element	Characteristics	
	S-Panel PC	Enclosed PC
Type	HDMI connector Type A	–
Amount	1	0
Resolution	Supports HDMI up to1920 x 1200 at 60 Hz	–

NOTE: I/O ports (such as serial, USB, and Ethernet interfaces) on this product have internal port numbers that may differ from physical port numbers, such as "COM1", "USB1" or "ETH1", printed on the product and used for identification in this manual. Check the port numbers in your environment.

Environmental Characteristics

Characteristics

Characteristics	Value	
	S-Panel PC	Enclosed PC
Degree of protection	IP66 front side of display	IP66 all around
Pollution degree	For use in pollution degree 2 environment	
Operating temperature	0...55 °C (32...131 °F) with SSD or CFast 0...55 °C (32...131 °F) with optional interface 0...45 °C (32...113 °F) with HDD	0...55 °C (32...131 °F) with SSD 0...45 °C (32...113 °F) with HDD
Storage temperature	- 20...60 °C (- 4...140 °F)	
Operating altitude	2,000 m (6,560 ft) max	
Vibration	5...500 Hz: 2 G_{rms} with SSD and CFast 5...500 Hz: 1 G_{rms} with HDD	5...500 Hz: 2 G_{rms} with SSD 5...500 Hz: 1 G_{rms} with HDD
Operating humidity	10...95 % RH at 40 °C (104 °F), no condensation	
Storage humidity	10...95 % RH at 40 °C (104 °F), no condensation	

Chapter 4
Dimensions / Installation

Subject of this Chapter

This chapter describes Harmony S-Panel PC dimensions and installation panels.

What Is in This Chapter?

This chapter contains the following topics:

Topic	Page
Dimensions	40
Installation Requirements	42
Installation	46

Dimensions

S-Panel PC W15” Dimensions

The following figure shows the dimensions:

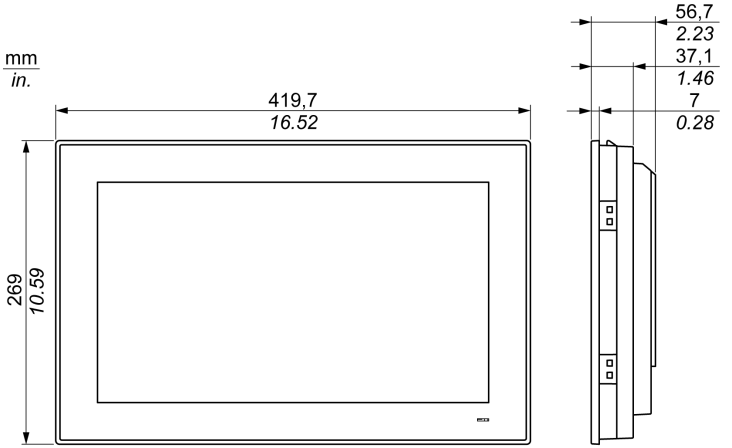

S-Panel PC W19” Dimensions

The following figure shows the dimensions:

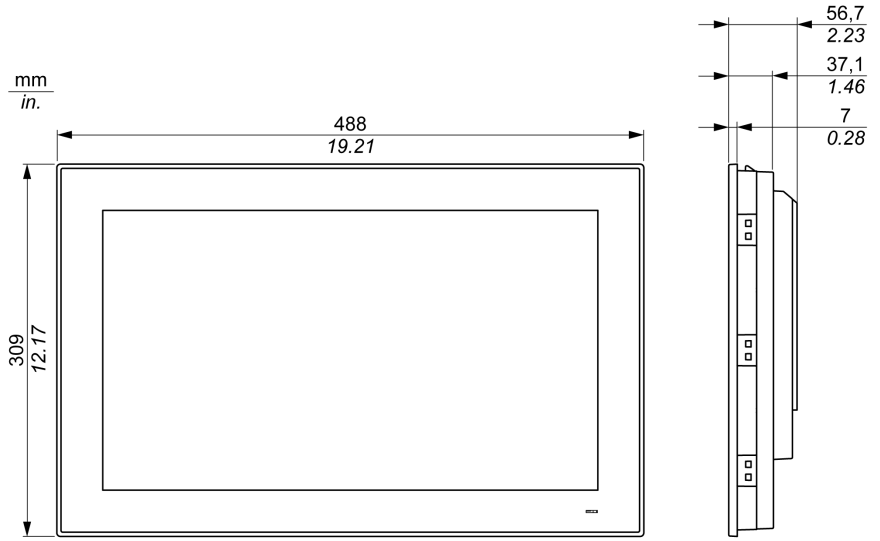

Enclosed PC W19” Dimensions

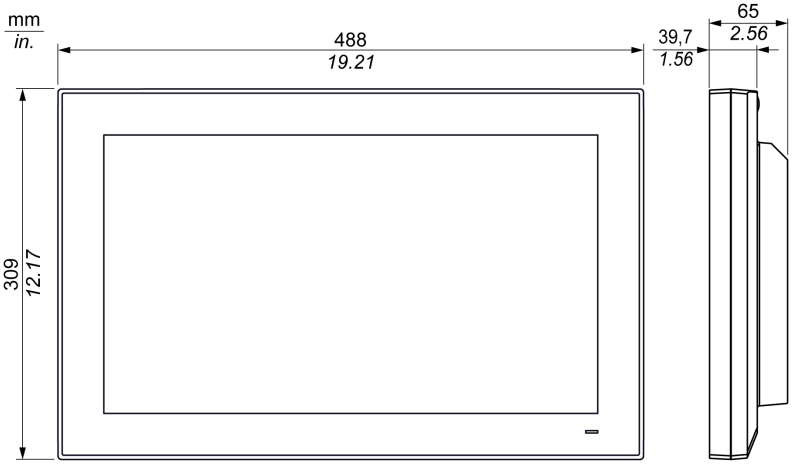

Installation Requirements

Important Mounting Information

Overheating of the system can cause incorrect software behavior. To prevent the system from overheating, be aware of the following:

- The environment characteristics of the system must be respected.
- The S-Panel PC and the Enclosed PC are only permitted for operation in closed rooms.
- The S-Panel PC and the Enclosed PC cannot be situated in direct sunlight.
- The S-Panel PC vent holes must not be covered.
- When mounting the S-Panel PC and the Enclosed PC, adhere to the allowable mounting angle.

⚠ WARNING

UNINTENDED EQUIPMENT OPERATION

- Do not place the Harmony Industrial PC next to other devices that might cause overheating.
- Keep the Harmony Industrial PC away from arc-generating devices such as magnetic switches and non-fused breakers.
- Avoid using the Harmony Industrial PC in environments where corrosive gases are present.
- Install the Harmony Industrial PC in a location providing a minimum clearance of 10 mm (0.39 in) or more on the left and right sides, 50 mm (1.96 in) or more on the rear side, and 100 mm (3.93 in) or more above and below the product from all adjacent structures and equipment.
- Install the Harmony Industrial PC with sufficient clearance for cable routing and cable connectors.

Failure to follow these instructions can result in death, serious injury, or equipment damage.

Spacing Requirements

In order to provide sufficient air circulation, mount the S-Panel PC and the Enclosed PC so that the spacing above, below, and on the sides of the unit is as follows:

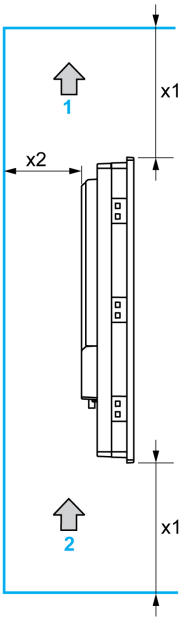

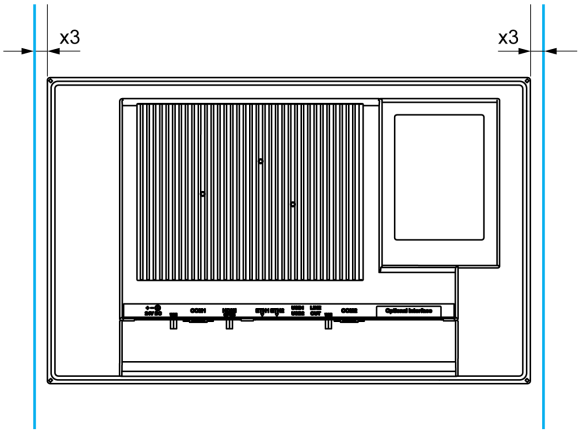

1 Air out
2 Air in
x1 > 100 mm (3.93 in)
x2 > 50 mm (1.96 in)
x3 > 10 mm (0.39 in)

Pressure Differences

When applying and installing Harmony HMI products, it is important that steps are taken to eliminate any pressure difference between the inside and the outside of the enclosure on which the HMI is mounted. A higher pressure inside the enclosure can cause delamination of the front membrane of the HMI display. A very small pressure inside of the enclosure will act on the large area of the membrane and can result in sufficient force to delaminate the membrane and thus cause failure of the HMI's touch capability. Pressure differences can often occur in applications where there are multiple fans and ventilators moving air at different rates in different rooms. Please follow these proven techniques to ensure that an HMI's function is not impacted by this mis-application:

1. Seal all conduit connections inside of the enclosure, especially those that lead to other rooms that may be at a different pressure.
2. Where applicable, install a small weep hole at the bottom of the enclosure that will allow the internal and external pressures to always equalize. This approach is simple to apply while maintaining conformance to ingress requirements.

Mounting Orientation

The following figure shows the allowable mounting orientation for the S-Panel PC and the Enclosed PC:

S-Panel PC Panel Cut Dimensions

For cabinet installation, you need to cut the correct sized opening in the installation panel.

The dimensions of the opening for installing the S-Panel PC are shown below:

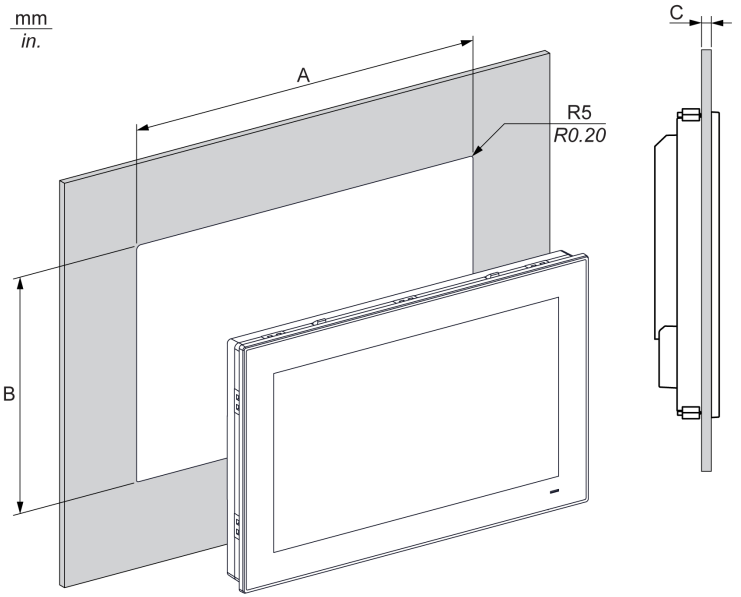

S-Panel PC Cut-out	A	B	C	R
W15”	412.4 ±0.7 mm (16.24 ±0.03 in)	261.7 ±0.4 mm (10.30 ±0.02 in)	2...6 mm (0.08...0.23 in)	5 mm (0.20 in)
W19”	479.3 ±1 mm (18.87 ±0.04 in)	300.3 ±0.7 mm (11.82 ±0.03 in)		

NOTE:

- Ensure that the thickness of the installation panel is from 2 to 6 mm (0.08 to 0.23 in).
- All installation panel surfaces used should be strengthened. Due consideration should be given to the weight of the S-Panel PC, especially if high levels of vibration are expected and the installation panel can move. Attach metal reinforcing strips to the inside of the panel near the panel cut-out to increase the strength of the installation panel.
- Ensure that all installation tolerances are maintained.
- The S-Panel PC is designed for use on a flat surface of a Type 4X enclosure (indoor use only).

Installation

Vibration and Shocks

Take extra care with respect to vibration levels when installing or moving the S-Panel PC and the Enclosed PC. If you move the S-Panel PC and the Enclosed PC while it is installed in a rack equipped with caster wheels, it may undergo excessive shock and vibration.

⚠ CAUTION

EXCESSIVE VIBRATION

- Plan your installation activities so that shock and vibration tolerances in the unit are not exceeded.
- Ensure that the installation panel opening and thickness are within the specified tolerances.
- Before mounting the Harmony Industrial PC into a cabinet or panel, ensure that the installation gasket is in place. The installation gasket provides additional protection from vibration.
- Tighten the installation fasteners using a torque of 0.5 Nm (4.5 lb-in).

Failure to follow these instructions can result in injury or equipment damage.

Installation Gasket

The gasket is required to meet the protection ratings (IP••/Type 4X indoor) of the S-Panel PC. It provides additional protection from vibration.

NOTE: IP••/Type 4X indoor or Type 4 is not part of UL certification.

⚠ CAUTION

LOSS OF SEAL

- Inspect the gasket before installation or reinstallation, and periodically as required by your operating environment.
- Replace the complete Harmony Industrial PC if visible scratches, tears, dirt, or excessive wear are noted during inspection.
- Do not stretch the gasket unnecessarily or allow the gasket to contact the corners or edges of the frame.
- Ensure that the gasket is fully seated in the installation groove.
- Install the Harmony Industrial PC into a panel that is flat and free of scratches or dents.
- Tighten the installation fasteners using a torque of 0.5 Nm (4.5 lb-in).

Failure to follow these instructions can result in injury or equipment damage.

Installation of the S-Panel PC

The installation gasket and installation fasteners are required for the easy installation of the S-Panel PC. The panel mounting process of the easy installation can be completed by one person.

NOTE: For easy installation of the S-Panel PC, the suggested mounting panel thickness can be up to 2 mm (0.079 in).

Follow these steps for the easy installation of the S-Panel PC:

Step	Action
1	Check that the gasket is correctly attached to the S-Panel PC. **NOTE:** When checking the gasket, avoid contact with the sharp edges of the S-Panel PC frame, and insert the gasket completely into its groove.
2	Release the 2 screws at the bottom of the S-Panel PC:
3	Loosen the 2 cross-slotted screws from the top of the S-Panel PC to raise the snap hook: 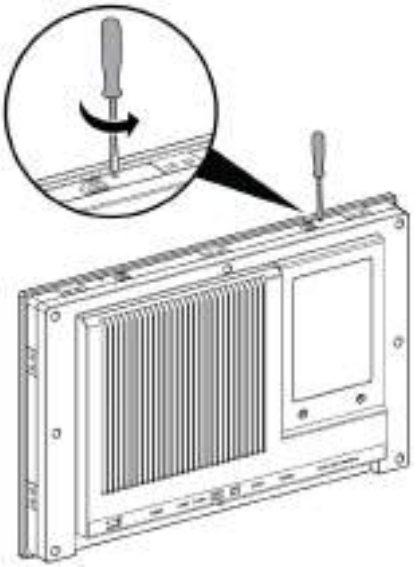

Step	Action
4	Install the S-Panel PC in the panel opening *(see page 45)* and push it into the wall. The snap hook holds the S-Panel PC to the wall:
5	Insert the 10 installation fasteners securely into the slots of the S-Panel PC: 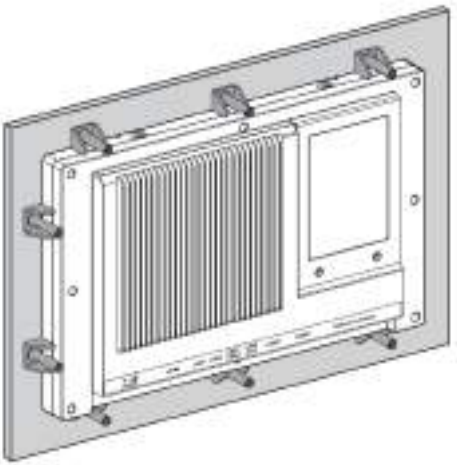

Step	Action
6	Insert each fastener in its corresponding slot and pull the fastener back until it is flush with the rear of the fastener hole: 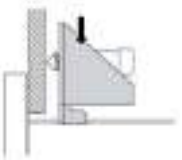 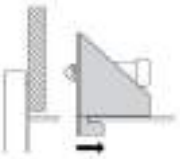
7	Tighten each of the cross-slotted fastener screws, and secure the S-Panel PC in place: 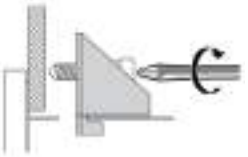 **NOTE:** To ensure a high degree of moisture resistance, use a torque of 0.5 Nm (4.5 lb-in).
8	The angle of the unit is tilted no more than the amount allowed by the mounting orientation requirements.

⚠ CAUTION

OVERTORQUE AND LOOSE HARDWARE

- Do not exert more than 0.5 Nm (4.5 lb-in) of torque when tightening the installation fastener, enclosure, accessory, or terminal block screws. Tightening the screws with excessive force can damage the installation fastener.
- When fastening or removing screws, ensure that they do not fall inside the Harmony Industrial PC chassis.

Failure to follow these instructions can result in injury or equipment damage.

NOTE: The installation fasteners are required for IP••/Type 4X indoor protection. IP••/Type 4X indoor or Type 4 is not part of UL certification.

Installation of the Enclosed PC with the VESA Mounting

Follow these steps when installing the Enclosed PC with the VESA (video electronics standards association):

Step	Action
1	Fasten the VESA mounting on the rear side of the Enclosed PC: 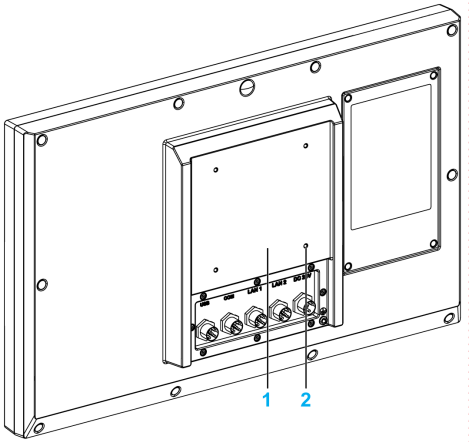 **1** VESA plate position (size 100 x 100 mm) **2** 4 x VESA mount screws for attachment
2	The angle of the unit is tilted no more than the amount allowed by the mounting orientation requirements: 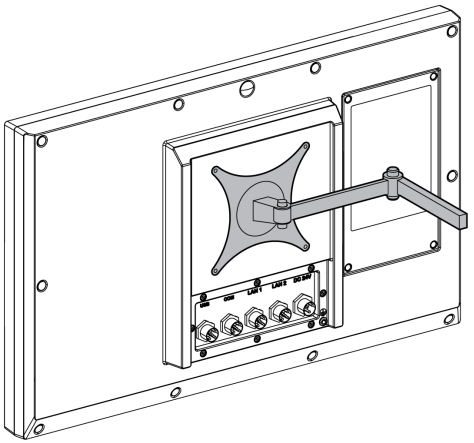

Chapter 5
Getting Started

First Power Up

License Agreement

Limitations on your usage of the Microsoft Windows Operating System are noted in Microsoft's End User License Agreement (EULA). This EULA is included on the recovery media containing the software required to reinstall the operating system. Read this document before the first power-up.

Install and customize the Schneider Electric applications (EcoStruxure Operator Terminal Expert, EcoStruxure Machine Expert, OPC Factory Server).

Windows® Embedded (WES)

The WES is a modularized version of the Windows operating system that provides increased reliability and customizations. It offers the power and familiarity of Windows in a compact, more reliable form. For more information, refer to Microsoft Windows Embedded Web page.

WES provides many tools for the customization of menus, boot screens, and dialog boxes. With WES, you can remove the Windows boot and resume animations so the screen remains black during startup. You can also remove the Windows logo from the login screen and other startup screens. Other common features of Windows include the message and dialog boxes. WES can filter these messages and keep them from appearing during run time. The developer can choose to hide any dialog box and predefine its default operation so it never displays to the user.

EWF Manager (Only on WES7)

The Harmony S-Panel PC operating system is installed on a memory card. This card is a rewritable CFast card.

The EWF manager (enhanced write filter manager) minimizes the number of write operations to help extend the life of the CFast card. The EWF manager loads temporary data (for example, system updates and software operations) into RAM, and does not write this information to the CFast card.

As a result, when using the EWF manager, restarting the S-Panel PC overwrites the modifications that you have made to the system. The following types of modifications may be overwritten if the EWF manager is active and the system is restarted:

- Newly installed applications.
- Newly installed peripherals.
- Newly created or modified user accounts.
- Network configuration modifications (such as IP addresses or default gateways).
- Operating System customizations (such as desktop background).

NOTICE

DATA AND CONFIGURATION LOSS

- Disable the EWF Manager before making any permanent changes to the hardware, software, or Operating System of the Harmony Industrial PC.
- Re-enable the EWF Manager after making permanent changes. This helps extend the operating life of the memory card.
- Back up the memory card data regularly to another storage media.

Failure to follow these instructions can result in equipment damage.

NOTE: Use Microsoft Embedded Lockdown Manager when using Windows® Embedded 8.1 Industry 64 bits MUI (Multilingual User Interface).

Enabling/Disabling the EWF Manager

You can modify the status of the EWF Manager by running the `EWFManager.exe` program located in `C:\Program Files\EWFManager\`. After running this program, restart the system for modifications to take effect. You need administrator privileges to enable and disable the EWF Manager.

Right Click from Touch Screen Interface

To access the **right-click** function from the touch screen, keep touching the screen for 2 seconds and the corresponding **right-click** function is activated (for instance, displaying the shortcut menu).

HORM WES 7

In HORM (hibernate once resume many) environment, a single hibernation file is used to restart the system repeatedly. To set a HORM environment, follow the steps below.

Make sure that **EWF** is disabled (you can use **EWFManager** tool to disable **EWF**).

Enable hibernation support (you can use the **Powercfg Command-Line** options command-line tool to enable hibernation. The command is **powercfg -h on** (default is enable).

Enable **EWF** by **EWFManager** tool. The system restarts.

Open the software that customers want to use right after the system resumes from hibernation.

Enable **HORM** by **EWFManager** tool. The system continues to use the HORM environment unless you disable HORM. You can use **EWFManager** tool to disable HORM.

NOTE: This feature is not supported by a CFast 16 GB.

HORM Windows® Embedded 8.1 Industry

In HORM environment, a single hibernation file is used to restart the system repeatedly. To set a HORM environment, follow the steps below.

Make sure that UWF is disabled (you can use **Embedded Lockdown Manager** tool to disable UWF).

Enable hibernation support (you can use the **Powercfg Command-Line** options command-line tool to enable hibernation). The command is **powercfg -h on** (default is enable).

Enable **UWF** by **Embedded Lockdown Manager** tool. The system restarts.

Open the software that customers want to use right after the system resumes from hibernation.

Enable **HORM** by **Embedded Lockdown Manager** tool.

The system continues to use the HORM environment unless you disable HORM. You can use **Embedded Lockdown Manager** tool to disable HORM.

HORM Win 10

In HORM environment, a single hibernation file is used to restart the system repeatedly. To set a HORM environment, follow the steps below.

Make sure that **UWF** is disabled (you can use **ELM** tool to disable **UWF**).

Enable hibernation support: (you can use the **Powercfg Command-Line** options command-line tool to enable hibernation. The command is **powercfg -h on** (default is enable).

Enable **UWF** by **ELM** tool. The system restarts.

Open the software that customers want to use right after the system resumes from hibernation.

Enable **HORM** by **ELM** tool. The system continues to use the HORM environment unless you disable HORM. You can use **ELM** tool to disable HORM.

Metro Interface with Windows® Embedded 8.1 Industry

The windows **Metro** (built-in apps) is enabled on latest version of Windows® Embedded 8.1 Industry. For the software applications, we recommend using the desktop version or modifying the software setting to start in desktop mode. Example: use **Internet Explorer** browser in desktop mode.

Chapter 6
Connections

Subject of This Chapter

This chapter describes the connection of the S-Panel PC to the main power supply. It also describes the USB ports and identifies the serial interface pin assignments.

What Is in This Chapter?

This chapter contains the following topics:

Topic	Page
Grounding	56
Connecting the DC Power Cord of the S-Panel PC	60
Connecting the DC Power Cord of the Enclosed PC	62
AC Power Supply S-Panel PC Description	64
S-Panel PC Interface Connections	69
Enclosed PC Interface Connections	71

Grounding

Overview

The grounding resistance between the S-Panel PC and the Enclosed PC ground wire and the ground must be 100 Ω or less. When using a long grounding wire, check the resistance and, if required, replace the wire with a thicker wire and place it in a duct.

The table shows the maximum length for the wires:

Wire cross-section	Maximum line length
1.3 mm^2 (AWG 16)	30 m (98 ft)
	60 m (196 ft) round trip

Grounding Procedure

⚠ WARNING

UNINTENDED EQUIPMENT OPERATION

- Use only the authorized grounding configurations shown below.
- Confirm that the grounding resistance is 100 Ω or less.
- Test the quality of your ground connection before applying power to the device. Excessive noise on the ground line can disrupt operations of the Harmony Industrial PC.

Failure to follow these instructions can result in death, serious injury, or equipment damage.

The S-Panel PC ground has 2 connections:
- DC supply voltage
- Ground connection pin

The figure shows the S-Panel PC:

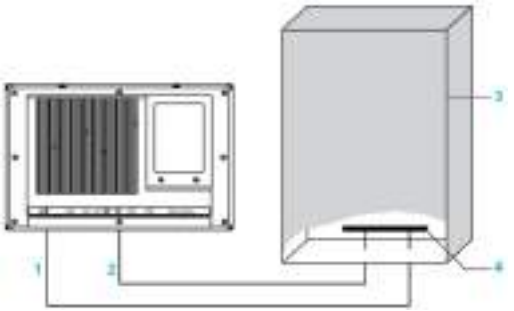

1 Supply voltage
2 Ground connection pin (functional ground connection pin)
3 Switching cabinet
4 Grounding strip

The figure shows the Enclosed PC:

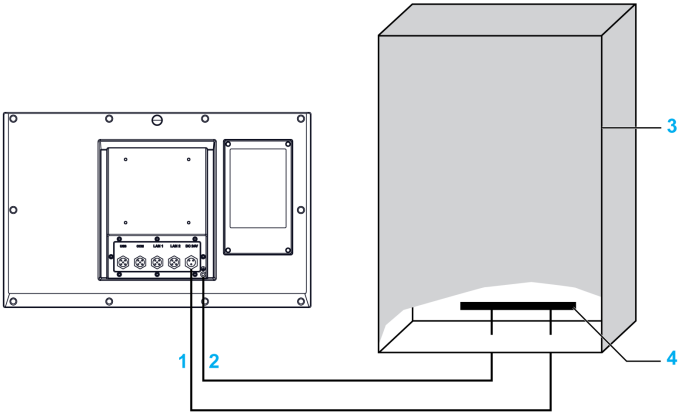

1 Supply voltage
2 Ground connection pin (functional ground connection pin)
3 Switching cabinet
4 Grounding strip

The figure shows the S-Panel PC:

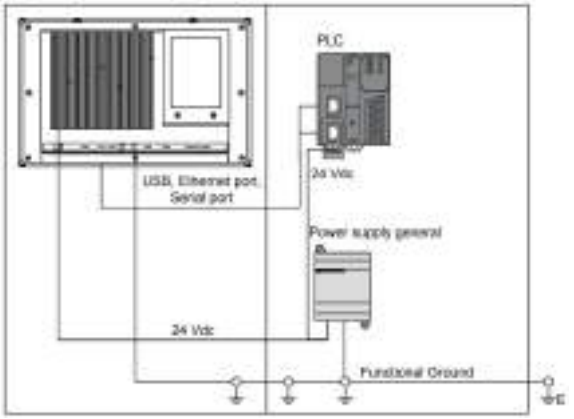

NOTE: For AC use the AC power supply module *(see page 64)*.

The figure shows the Enclosed PC:

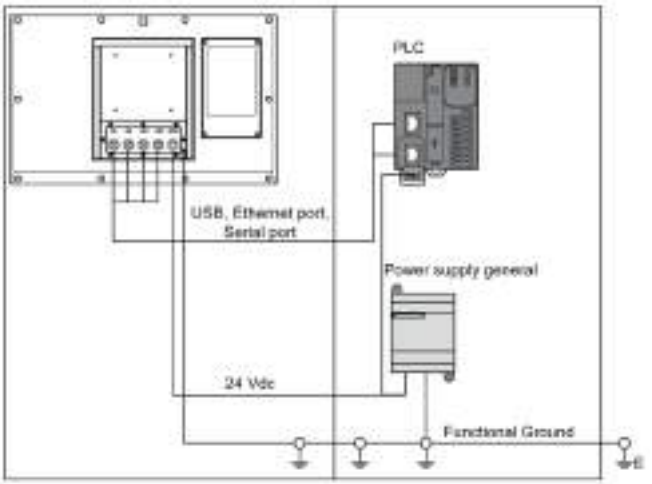

When grounding, follow this procedure:

Step	Action
1	Ensure all of the following is done for the system wiring: ● Connect the cabinet to ground. ● Ensure that all cabinets are grounded together. ● Connect the ground of the power supply to the cabinet. ● Connect the ground pin of the S-Panel PC to the cabinet. ● Connect the I/O to the controller if needed. ● Connect the power supply to the S-Panel PC.
2	Check that the grounding resistance is 100 Ω or less.
3	When connecting the SG line to another device, ensure that the design of the system/connection does not produce a ground loop. **NOTE:** The SG and ground connection screw are connected internally in the S-Panel PC.
4	Use 1.3 mm^2 (AWG 16) wire to make the ground connection. Create the connection point as close to the S-Panel PC as possible and make the wire as short as possible.

Grounding I/O Signal Lines

⚠ DANGER

POTENTIAL FOR EXPLOSION IN HAZARDOUS LOCATION

Do not use these products in hazardous locations.

Failure to follow these instructions will result in death or serious injury.

Electromagnetic radiation may interfere with the control communications of the S-Panel PC and the Enclosed PC.

⚠ WARNING

UNINTENDED EQUIPMENT OPERATION

- If wiring of I/O lines near power lines or radio equipment is unavoidable, use shielded cables and ground one end of the shield to the Harmony Industrial PC ground connection screw.
- Do not wire I/O lines in proximity to power cables, radio devices, or other equipment that may cause electromagnetic interference.

Failure to follow these instructions can result in death, serious injury, or equipment damage.

Connecting the DC Power Cord of the S-Panel PC

Precaution

When connecting the power cord to the power connector on the S-Panel PC, first ensure that the power cord is disconnected from the DC power supply.

NOTE: The power cord can be connected to an AC power supply module (HMIYPSPMAC1).

⚠ ⚠ DANGER

HAZARD OF ELECTRIC SHOCK, EXPLOSION OR ARC FLASH

- Remove all power from the device before removing any covers or elements of the system, and prior to installing or removing any accessories, hardware, or cables.
- Unplug the power cable from both the Harmony Industrial PC and the power supply.
- Always use a properly rated voltage sensing device to confirm power is off.
- Replace and secure all covers or elements of the system before applying power to the unit.
- Use only the specified voltage when operating the Harmony Industrial PC. The DC unit is designed to use 24 Vdc input.

Failure to follow these instructions will result in death or serious injury.

⚠ WARNING

EQUIPMENT DISCONNECTION OR UNINTENDED EQUIPMENT OPERATION

- Ensure that power, communication, and accessory connections do not place excessive stress on the ports. Consider the vibration in the environment.
- Securely attach power, communication, and external accessory cables to the panel or cabinet.
- Use only D-Sub 9-pin connector cables with a locking system in good condition.
- Use only commercially available USB cables.

Failure to follow these instructions can result in death, serious injury, or equipment damage.

Wiring and Connecting the Terminal Block

The table below describes how to connect the power cord to the DC terminal block of the S-Panel PC:

Step	Action
1	Remove all power from the S-Panel PC and confirm that the DC power supply has been disconnected from its power source.
2	Remove the terminal block from the power connector and connect the power cord to the terminal block as shown below: The figure shows the power cord to the DC terminal block of the S-Panel PC: 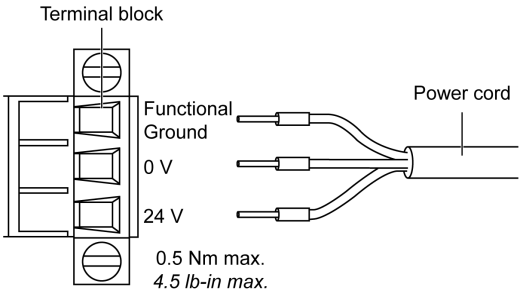 Use copper wire rated for 75 °C (167 °F) with a section of 0.75 to 2.5 mm^2 (AWG 18 to AWG 14) and use 2.5 mm^2 wire to make the ground connection.
3	Place the terminal block in the power connector and tighten the screws. The figure shows the power cord to the DC terminal block of the S-Panel PC: 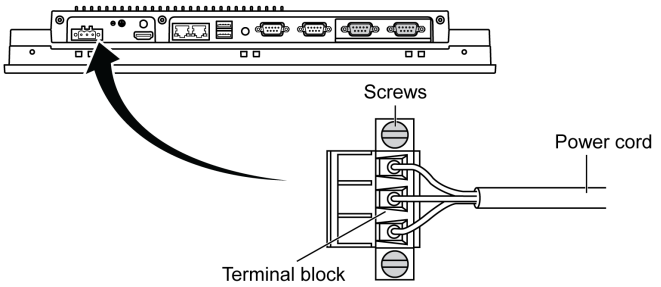 **NOTE:** The recommended torque to tighten these screws is 0.5 Nm (4.5 lb-in).

Connecting the DC Power Cord of the Enclosed PC

Precaution

When connecting the power cord to the power connector on the Enclosed PC, first ensure that the power cord is disconnected from the DC power supply.

⚠ ⚠ DANGER

HAZARD OF ELECTRIC SHOCK, EXPLOSION OR ARC FLASH

- Remove all power from the device before removing any covers or elements of the system, and prior to installing or removing any accessories, hardware, or cables.
- Unplug the power cable from both the Harmony Industrial PC and the power supply.
- Always use a properly rated voltage sensing device to confirm power is off.
- Replace and secure all covers or elements of the system before applying power to the unit.
- Use only the specified voltage when operating the Harmony Industrial PC. The DC unit is designed to use 24 Vdc input.

Failure to follow these instructions will result in death or serious injury.

⚠ WARNING

EQUIPMENT DISCONNECTION OR UNINTENDED EQUIPMENT OPERATION

- Ensure that power, communication, and accessory connections do not place excessive stress on the ports. Consider the vibration in the environment.
- Securely attach power, communication, and external accessory cables to the panel or cabinet.
- Use only D-Sub 9-pin connector cables with a locking system in good condition.
- Use only commercially available USB cables.

Failure to follow these instructions can result in death, serious injury, or equipment damage.

Wiring and Connecting the Terminal Block

The table below describes how to connect the power cord to the DC terminal block of the Enclosed PC:

Step	Action
1	Remove all power from the Enclosed PC and confirm that the DC power supply has been disconnected from its power source.
2	Remove the terminal block from the power connector and connect the power cord to the terminal block. The figure shows the power cord to the DC terminal block of the Enclosed PC: 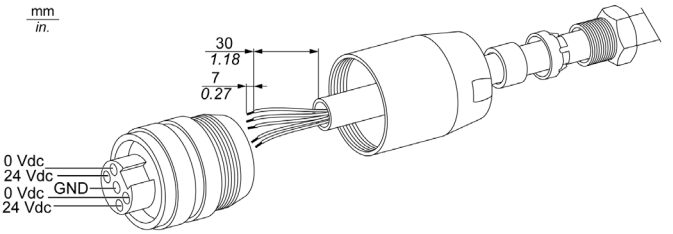 Use copper wire rated for 75 °C (167 °F) with a section of 0.75 to 2.5 mm^2 (AWG 18 to AWG 14) and use 2.5 mm^2 wire to make the ground connection. **NOTE:** HMIYCABM1211 ready to use kit of cables is also available *(see page 221)*.
3	Place the terminal block in the power connector and tighten the screws. **NOTE:** The recommended torque to tighten these screws is 0.5 Nm (4.5 lb-in). The figure shows the power cord to the DC terminal block of the Enclosed PC: 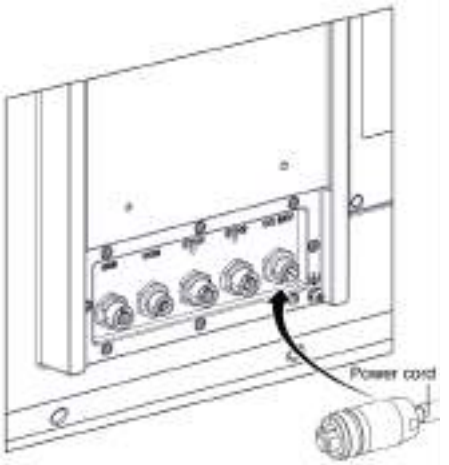

AC Power Supply S-Panel PC Description

Introduction

The HMIYPSPMAC1 is an AC power supply module. The external AC power supply module to be installed out of S-Panel PC, delivered with US and Europe power cord.

Overview

⚠ ⚠ DANGER

HAZARD OF ELECTRIC SHOCK, EXPLOSION OR ARC FLASH

- Remove all power from the device before removing any covers or elements of the system, and prior to installing or removing any accessories, hardware, or cables.
- Unplug the power cable from both the Harmony Industrial PC and the power supply.
- Always use a properly rated voltage sensing device to confirm that power is off.
- Replace and secure all covers or elements of the system before applying power to the unit.
- Use only the specified voltage when operating the Harmony Industrial PC. The AC unit is designed to use 100...240 Vac input.

Failure to follow these instructions will result in death or serious injury.

⚠ WARNING

EQUIPMENT DISCONNECTION OR UNINTENDED EQUIPMENT OPERATION

- Ensure that power, communication, and accessory connections do not place excessive stress on the ports. Consider the vibration in the environment.
- Securely attach power, communication, and external accessory cables to the panel or cabinet.
- Use only D-Sub 9-pin connector cables with a locking system in good condition.
- Use only commercially available USB cables.

Failure to follow these instructions can result in death, serious injury, or equipment damage.

⚠ WARNING

RISK OF BURNS

Do not touch the surface of the heat sink during operation.

Failure to follow these instructions can result in death, serious injury, or equipment damage.

This figure shows the AC power supply module:

This figure shows the dimensions of the AC power supply module:

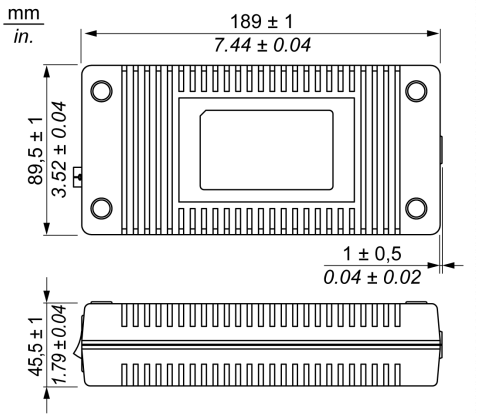

This figure shows the label of the AC power supply module:

AC Power Supply

The table provides technical data for the AC power supply module:

Element	Characteristics
Input	100...240 Vac / 47...63 Hz / 1.89 A max at 100 Vac
Output	24 Vdc / 6.25 A max.
Environment	
Operation temperature	0...70 °C (32...158 °F), see derating curve
Storage temperature	-40...85 °C (-40...185 °F)
Relative humidity	0...95 %, non-condensing

Operation temperature of the AC power supply derating curve:

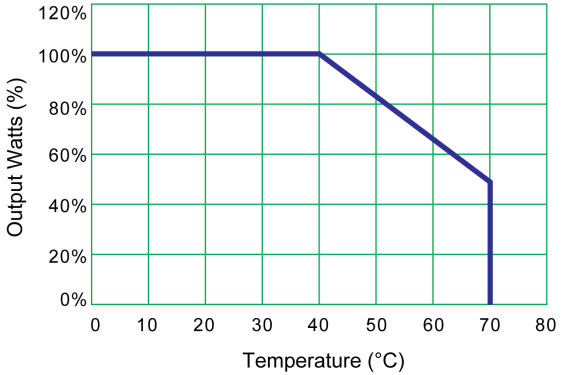

Wiring and Connecting the Terminal Block

The following table describes how to connect the power cord to the DC terminal block of the S-Panel PC:

Step	Action
1	Remove all power from the S-Panel PC and confirm that the power adapter has been disconnected from its power source.
2	Remove the terminal block from the power connector and connect the power cord to the terminal block: 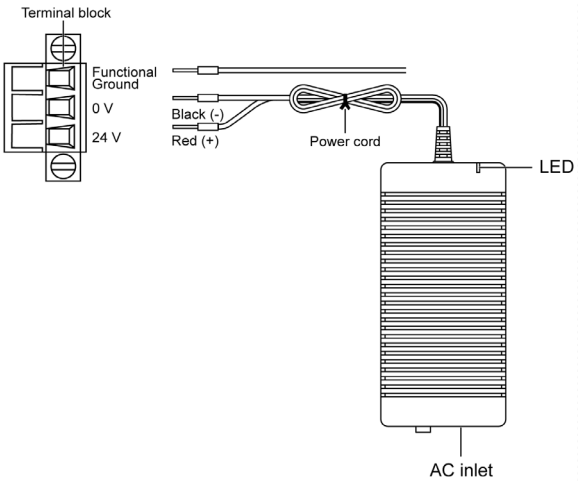 Connect the black wire with the 0 V and the red wire with the 24 V of the terminal block. Use 1.3 mm^2 copper wire to make the ground connection of the terminal block.
3	Place the terminal block in the power connector and tighten the screws: 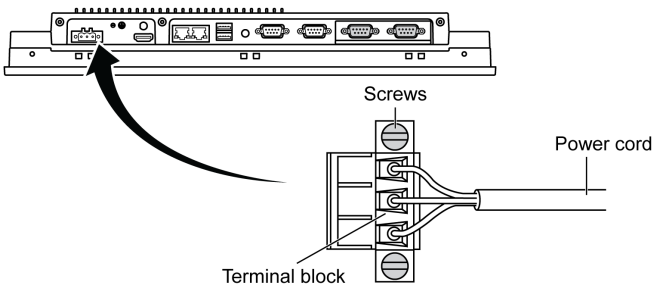 **NOTE:** The recommended torque to tighten these screws is 0.5 Nm (4.5 lb-in).

S-Panel PC Interface Connections

Introduction

⚠ DANGER

POTENTIAL FOR EXPLOSION IN HAZARDOUS LOCATION

Do not use these products in hazardous locations.

Failure to follow these instructions will result in death or serious injury.

⚠ WARNING

EQUIPMENT DISCONNECTION OR UNINTENDED EQUIPMENT OPERATION

- Ensure that power, communication, and accessory connections do not place excessive stress on the ports. Consider the vibration in the environment.
- Securely attach power, communication, and external accessory cables to the panel or cabinet.
- Use only D-Sub 9-pin connector cables with a locking system in good condition.
- Use only commercially available USB cables.

Failure to follow these instructions can result in death, serious injury, or equipment damage.

Serial Interface Connections

This interface is used to connect S-Panel PC to remote equipment, via a serial interface cable. The connector is a D-Sub 9-pin plug connector.

By using a long PLC cable to connect to the S-Panel PC, it is possible that the cable can be at a different electrical potential than the panel, even if both are connected to ground.

The S-Panel PC serial port is not isolated. The shield ground and the functional ground terminals are connected inside the panel.

⚠ ⚠ DANGER

ELECTRIC SHOCK

- Make a direct connection between the ground connection screw and ground.
- Do not connect other devices to ground through the ground connection screw of this device.
- Install all cables according to local codes and requirements. If local codes do not require grounding, follow a reliable guide such as the US National Electrical Code, Article 800.

Failure to follow these instructions will result in death or serious injury.

The table shows the D-Sub 9-pin assignments (COM1):

Pin	Assignment	
	RS-232	
1	DCD	D-Sub 9-pin plug connector: 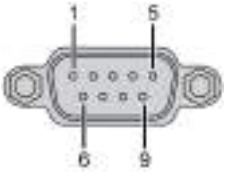
2	RxD	
3	TxD	
4	DTR	
5	GND	
6	DSR	
7	RTS	
8	CTS	
9	RI	

The table shows the D-Sub 9-pin assignments (COM2):

Pin	Assignment		
	RS-232	RS-422/485	
1	DCD	TxD-/Data-	D-Sub 9-pin plug connector: 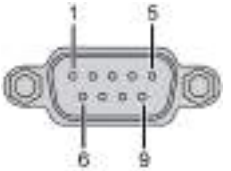
2	RxD	TxD+/Data+	
3	TxD	RxD+	
4	DTR	RxD-	
5	GND	GND/VEE	
6	DSR	N/A	
7	RTS	N/A	
8	CTS	N/A	
9	RI	N/A	

Any excessive weight or stress on communication cables may disconnect the equipment.

NOTE: You can select RS-232, RS-422, or RS-485 to COM2 port. The RS-485 port is designed with auto data flow control capability and automatically detects the data flow direction.

NOTE: To achieve Modbus through RS-485 COM port with Schneider Electric device, do not use standard Schneider Electric cable. Follow wiring diagram above to create a convenient cable depending on the remote device to connect to.

Enclosed PC Interface Connections

Introduction

⚠ DANGER

POTENTIAL FOR EXPLOSION IN HAZARDOUS LOCATION

Do not use these products in hazardous locations.

Failure to follow these instructions will result in death or serious injury.

⚠ WARNING

EQUIPMENT DISCONNECTION OR UNINTENDED EQUIPMENT OPERATION

- Ensure that power, communication, and accessory connections do not place excessive stress on the ports. Consider the vibration in the environment.
- Securely attach power, communication, and external accessory cables to the panel or cabinet.
- Use only D-Sub 9-pin connector cables with a locking system in good condition.
- Use only commercially available USB cables.

Failure to follow these instructions can result in death, serious injury, or equipment damage.

NOTE: M12 connector: IEC 61076-2-101 (IEC 60947-5-2) NECA 4202.

NOTE: HMIYCABM1211 ready to use kit of cables is also available *(see page 221)*.

Power Input Pin Definition with M12 Male Connector

M12 pin number	Description	Wire color	DC 24V
1	0 Vdc	White	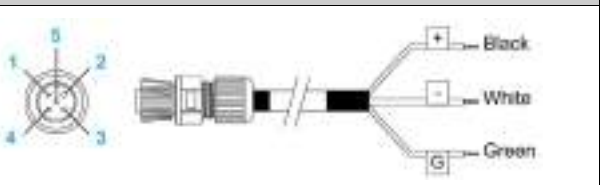
2	0 Vdc	White	
3	24 Vdc	Black	
4	24 Vdc	Black	
5	GND	Green	

RS-232 Pin Definition with M12 Male Connector

M12 pin number	Signal	DB-9 pin number	COM
1	CD	1	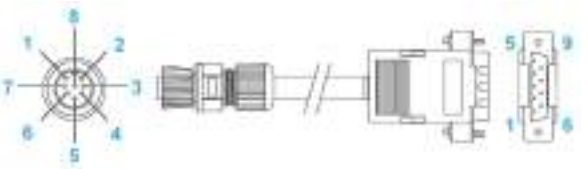
2	RXD	2	
3	TXD	3	
4	DTR	4	
5	IGND	5	
6	DSR	6	
7	RTS	7	
8	CTS	8	

USB Pin Definition with M12 Female Connector

M12 pin number	Signal	Wire color	RJ45 pin number	USB
1	VCC	Red	1	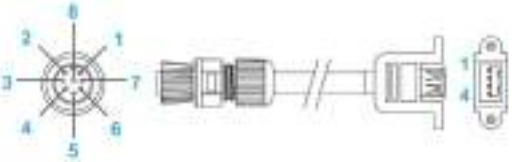
3	D+	Green	2	
5	VSS	Black	4	
6	D-	White	3	
8	Shielding	–	–	

ETH1 / ETH2 Pin Definition with M12 Female Connectors

M12 pin number	Signal	Wire color	RJ45 pin number	ETH
1	TX_D1+	Orange / White	1	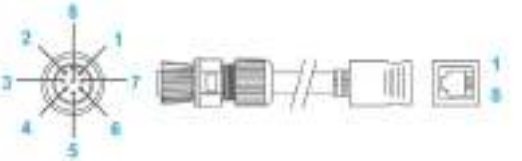
2	TX_D1-	Orange	2	
3	RX_D2+	Green / White	3	
4	BI_D3+	Blue	4	
5	BI_D3-	Blue / White	5	
6	RX_D2-	Green	6	
7	BI_D4+	Brown / White	7	
8	BI_D4-	Brown	8	

Chapter 7
Configuration of the Boot

What Is in This Chapter?

This chapter contains the following sections:

Section	Topic	Page
7.1	S-Panel PC BIOS	74
7.2	Enclosed PC BIOS	85

Section 7.1
S-Panel PC BIOS

Overview

This section describes the BIOS.

What Is in This Section?

This section contains the following topics:

Topic	Page
S-Panel PC **Main** Menu	75
S-Panel PC **Advanced** Menu	76
S-Panel PC **Chipset** Menu	80
S-Panel PC **Boot** Menu	82
S-Panel PC **Security** Menu	83
S-Panel PC **Save & Exit** Menu	84

S-Panel PC Main Menu

General Information

BIOS stands for **Basic Input Output System**.

The **BIOS Setup Utility** lets you modify basic system configuration settings.

NOTE: To enter BIOS setup, press **DEL** key during startup.

Main Tab

When you press the [DEL] key during startup, the **Main** BIOS setup menu appears.

This screen, like all the BIOS screens, is divided into three frames:

- Left: This frame displays the options available on the screen.
- Upper right: This frame gives a description of the user selected option.
- Lower right: This frame displays how to move to other screens and the screen edit commands.

This table shows the **Main** menu options that can be set by the user:

BIOS setting	Description
System Time	This is the current time setting. The time must be entered in HH:MM:SS format. The time is maintained by the battery (CMOS battery) when the unit is turned off.
System Date	This is the current date setting. The date must be entered in MM/DD/YY format. The date is maintained by the battery (CMOS battery) when the unit is turned off.

NOTE: The grayed-out options on all BIOS screens cannot be configured. The blue options can be configured by the user.

S-Panel PC Advanced Menu

Advanced BIOS Features Tab

For details about the Advanced submenus, refer to:

- ACPI Settings
- CPU Configuration
- SATA Configuration
- PCH-FW Configuration
- USB Configuration
- IT8768E Super I/O Configuration
- IMT Configuration
- COM2 Configuration
- EC Watchdog Configuration

ACPI Settings Submenu

BIOS setting	Description
Enable ACPI Auto Configuration	Enables or disables BIOS ACPI auto configuration.
Enable Hibernation	Enables or disables hibernation. This option may be not effective with some OS.
ACPI Sleep State	Sets the ACPI sleep state.

CPU Configuration Submenu

BIOS setting	Description
Hyper-threading	Enables or disables the Intel hyper threading technology.
Active Processor Cores	Enable or disables a number of cores in each processor package.
Limit CPUID Maximum	Disable for Windows® XP.
Execute Disable Bit	Enables or disables the no-execution page protection.
Intel Virtualization Technology	Enables or disables Intel virtualization technology. When enabled, a VMM can utilize the additional hardware capabilities provided by Vanderpool technology.
Hardware Prefetcher	Enables or disables the Mid Level Cache (L2) streamer prefetcher.
Adjacent Cache Line Prefetch	Enables or disables the Mid Level Cache (L2) prefetching of adjacent cache lines.
CPU AES	Enables or disables the CPU Advanced Encryption Standard instructions.
Boot performance mode	This Item allows users to select the performance state that the BIOS will set before OS handoff.
EIST	Enables or disables Intel SpeedStep..

BIOS setting	Description
CPU C States	Enables or disables CPU C states.
ACPI CTDP BIOS	Enables or disables ACPI CTDP BIOS support.
Configurable TDP Level	Select Configurable TDP Level.
Config TDP Lock	Enable or disable Config TDP Lock.

SATA Configuration Submenu

BIOS setting	Description
SATA Controller(s)	Enable or disable SATA devices.
SATA Mode Selection	Select SATA mode selection. (Determines how SATA controllers operate).
Aggressive LPM Support	Enable or disable PCH to aggressively enter link power state.
SATA Speed Support	Indicates the maximum speed the SATA controller can support.
Serial ATA Port 1	Enable or disable serial ATA port.
Serial ATA Port 1 HotPlug	Designates this port as hot pluggable.
Serial ATA Port 2	Enable or disable serial ATA port.
Serial ATA Port 2 HotPlug	Designates this port as hot pluggable.
Serial ATA Port 3	Enable or disable serial ATA port.
Serial ATA Port 3 HotPlug	Designates this port as hot pluggable.
Serial ATA Port 4	Enable or disable serial ATA port.
Serial ATA Port 4 HotPlug	Designates this port as hot pluggable.

PCH-FW Configuration Submenu

BIOS setting	Description
MDES BIOS Status Code	Enable or disable MDES BIOS status code.
fTPM Device Selection	Select GPDMA work-around or MSFT QFE solution.
TPM Device Selection	Enable or disable TPM device selection. (PTT or dTPM. PTT-Enables PTT in SkuMgr dTPM 1.2 - Disables PTT in SkuMgr informing! PTT/dTPM is disabled and all data saved on it is lost.
Firmware Update Configuration	**ME FW Image Re-Flash**: Enable or disable ME FW image re-Flash function.

USB Configuration Submenu

BIOS setting	Description
Legacy USB Support	Enable or disable legacy USB support. Auto option disables legacy support if no USB devices are connected. Disable option keeps USB devices available only for EFI applications.
USB3.0 Support	Enable or disable USB3.0 (XHCI) controller support.
XHCI Hand-off	Enable or disable XHCI hand-off. This is a work-around for OS without XHCI hand-off support. The XHCI ownership modify is claimed by XHCI driver.
EHCI Hand-off	Enable or disable EHCI hand-off. This is a workroom for OS without EHCI hand-off support. The EHCI ownership modify is claimed by EHCI driver.
USB Mass Storage Driver Support	Enable or disable USB mass storage driver support.
USB transfer time-out	Select time-out section. The time-out value for control, bulk, and interrupt transfers.
Device reset time-out	Select device time-out section. USB mass storage devices start unit command time-out.
Device power-up delay	Select device power-up section. Maximum time the device takes before it properly reports itself to the host controller. **Auto** uses a default value: for a root port, it is 100 ms, for a hub port the delay is taken from the hub descriptor.

IT8768E Super IO Configuration Submenu

BIOS setting	Description
Serial Port 1 Configuration	**Serial Port**: Enable or disable the COM port.
Serial Port 2 Configuration	**Serial Port**: Enable or disable the COM port.

IMT Configuration Submenu

BIOS setting	Description
CPU Shutdown Temperature	Select CPU shutdown temperature.
IMT WatchDog IRQ	Select iManager IRQ number eBrain watchdog.
Backlight Enable Polarity	Switch backlight enable polarity for native or invert.
Hardware Monitor	Monitor hardware status.

Optional COM2 Configuration Submenu

BIOS setting	Description
COM2 UART mode setting	Select RS-232 or RS-422/485 mode. The default setting is RS-232 mode.

Optional EC Watchdog Configuration Submenu

BIOS setting	Description
EC Watchdog setting	Select EC watchdog setting.

S-Panel PC Chipset Menu

Chipset BIOS Features Tab

For details about the **Chipset** submenus, refer to:

- PCH-IO Configuration
- System Agent (SA) Configuration

PCH-IO Configuration Menu

BIOS setting	Description
PCI Express Configuration	Select PCI Express Configuration settings.
USB Per Port Control	Select USB Configuration settings.
PCH LAN Controller	Enable or disable onboard NIC.
Wake on LAN	Enable or disable integrated LAN to wake the system.
Restore AC Power Loss	Select AC power state when power is reapplied after a power outage.

PCI Express Configuration Submenu

BIOS setting	Description
PCI Express Clock Gating	Enable or disable PCI Express Clock Gatting for each root port.
DMI Link ASPM Control	Enable or disable DMI Link ASPM Control.
DMI Link Extended Synch Control	Enable or disable DMI Link Extended Synch Control.
PCIe-USB Glitch W/A	Enable or disable PCIe-USB Glitch W/A.
PCI Express Root Port 1	Select PCI Express Root Port 1 settings.
MINI PCIe	Select PCI Express Root Port 6 settings.

USB Configuration Submenu

BIOS setting	Description
USB Precondition	Enable or disable USB Precondition.
XHCI Mode	Select mode of operation of XHCI mode.
XHCI Idle L1	Enable or disable XHCI Idle L1.
BTCG	Enable or disable trunk clock gating.
USB Ports Per-Port Disable Control	Enable or disable USB Ports Per-Port Disable Control.

System Agent (SA) Configuration Menu

BIOS setting	Description
VT-d	Enable or disable VT-d function.
Graphics Configuration	Select graphics setting.

S-Panel PC Boot Menu

Boot Settings Configuration Menu

Boot setting	Description
Setup Prompt Timeout	Select the number of seconds to wait for setup activation key.
Bootup NumLock state	Select the keyboard **NumLock** state.
Quiet Boot	Enables or disables **Quiet Boot** option.
Fast Boot	Enables or disables boot with initialization of a minimal set of devices required to launch active boot option. It has no effect for BBS boot options.
CSM Parameters	Select boot option filter.

CSM Parameters Submenu

Boot setting	Description
Launch CSM	Enables or disables launch CSM.
Boot option filter	Select boot option filter setting.
Launch PXE OpROM policy	Select launch PXE OpROM policy setting.
Launch Storage OpROM policy	Select launch storage OpROM policy setting.
Launch Video OpROM policy	Select launch video OpROM policy setting.
Other PCI device ROM priority	Select other PCI device ROM priority setting.

S-Panel PC Security Menu

Security Setup

Select **Security Setup** from the main BIOS setup menu. All **Security Setup** options, such as password protection, are described in this section. To access the submenu for the following items, select the item and press **Enter**.

To change the administrator or user password, select the **Administrator / User Password** option, press **Enter** to access the submenu, and then type the password.

Account and Authority Management

⚠ WARNING

UNAUTHORIZED DATA ACCESS

- Immediately change any default passwords to new and secure passwords.
- Do not distribute passwords to unauthorized or unqualified personnel.
- Limit access rights to users essential to your application needs only.

Failure to follow these instructions can result in death, serious injury, or equipment damage.

Username	Password
admin	ipc1234

NOTE: Above are the current default settings; it is recommended to modify the default password immediately.

S-Panel PC Save & Exit Menu

Menu

BIOS setting	Description
Save Changes and Exit	When the system configuration is complete, select this option to save changes, exiting the BIOS setup and, if necessary, reboot the computer to take into account all system configuration parameters.
Discard Changes and Exit	Select this option to quit setup without making any permanent changes to the system configuration.
Save Changes and Reset	Selecting this option displays a confirmation message box. On confirming, you save changes to the BIOS settings, save the settings to CMOS, and restart the system.
Discard Changes and Reset	Select this option to quit BIOS setup without making any permanent changes to the system configuration and reboot the computer.
Save Changes	Select this option to save the system configuration changes without exiting the BIOS setup menu.
Discard Changes	Select this option to discard any current changes and load previous system configuration.
Restore Defaults	Select this option to configure automatically all BIOS setup items to the optimal default settings. The optimal defaults are designed for maximum system performance, but may not work best for all computer applications. Do not use the optimal defaults if the user's computer is experiencing system configuration problems.
Save User Defaults	When the system configuration is complete, select this option to save changes as the user defaults without exit BIOS setup menu.
Restore User Defaults	Select this option to restore the user defaults.

Section 7.2
Enclosed PC BIOS

Overview

This section describes the BIOS.

What Is in This Section?

This section contains the following topics:

Topic	Page
Enclosed PC **Main** Menu	86
Enclosed PC **Advanced** Menu	87
Enclosed PC **Chipset** Menu	91
Enclosed PC **Boot** Menu	93
Enclosed PC **Security** Menu	94
Enclosed PC **Save & Exit** Menu	95

Enclosed PC Main Menu

General Information

BIOS stands for **Basic Input Output System**.

The **BIOS Setup Utility** lets you modify basic system configuration settings.

NOTE: To enter BIOS setup, press **DEL** key during startup.

Main Tab

When you press the [DEL] key during startup, the **Main** BIOS setup menu appears.

This screen, like all the BIOS screens, is divided into three frames:

- Left: This frame displays the options available on the screen.
- Upper right: This frame gives a description of the user selected option.
- Lower right: This frame displays how to move to other screens and the screen edit commands.

This table shows the **Main** menu options that can be set by the user:

BIOS setting	Description
System Time	This is the current time setting. The time must be entered in HH:MM:SS format. The time is maintained by the battery (CMOS battery) when the unit is turned off.
System Date	This is the current date setting. The date must be entered in MM/DD/YY format. The date is maintained by the battery (CMOS battery) when the unit is turned off.

NOTE: The grayed-out options on all BIOS screens cannot be configured. The blue options can be configured by the user.

Enclosed PC Advanced Menu

Advanced BIOS Features Tab

For details about the Advanced submenus, refer to:

- PCI Subsystem Settings
- ACPI Settings
- S5 RTC Wake Settings
- CPU Configuration
- SATA Configuration
- PCH-FW Configuration
- USB Configuration
- Embedded Controller Configuration
- IT8768E Super I/O Configuration
- Serial Port Console Redirection

PCI Subsystem Settings Submenu

BIOS setting	Description
PCI Latency Timer	Select PCI Latency Timer Register.
VGA Palette Snoop	Enables or disables VGA Paltte Registers Snooping.
PERR# Generation	Enables or disables PCI device to Generate PERR#.
SERR# Generration	Enables or disables PCI device to Generate SERR#.
PCI Express Settings	Select PCI Express Settings.

ACPI Settings Submenu

BIOS setting	Description
Enable ACPI Auto Configuration	Enables or disables BIOS ACPI auto configuration.
Enable Hibernation	Enables or disables hibernation. This option may be not effective with some OS.
ACPI Sleep State	Sets the ACPI sleep state.
Lock Legacy Resources	Enables or disables Lock of Legacy Resources.
S3 Video Repost	Enables or disables S3 Video Repost.
ACPI Low Power S0 Idle	Enables or disables Config TDP Lock.

S5 RTC Wake Settings Submenu

BIOS setting	Description
Wake system from S5	Enables or disables system to wake up from S5 using RTC alarm.

CPU Configuration Submenu

BIOS setting	Description
Hyper-threading	Enables or disables the Intel hyper threading technology.
Active Processor Cores	Enable or disables a number of cores in each processor package.
Limit CPUID Maximum	Disable for Windows® XP.
Execute Disable Bit	Enables or disables the no-execution page protection.
Intel Virtualization Technology	Enables or disables Intel virtualization technology. When enabled, a VMM can utilize the additional hardware capabilities provided by Vanderpool technology.
Hardware Prefetcher	Enables or disables the Mid Level Cache (L2) streamer prefetcher.
Adjacent Cache Line Prefetch	Enables or disables the Mid Level Cache (L2) prefetching of adjacent cache lines.
CPU AES	Enables or disables the CPU Advanced Encryption Standard instructions.
Boot performance mode	This Item allows users to select the performance state that the BIOS will set before OS handoff.
EIST	Enables or disables Intel SpeedStep..
CPU C states	Enables or disables CPU C states.
ACPI CTDP BIOS	Enables or disables ACPI CTDP BIOS support.
Configurable TDP Level	Select Configurable TDP Level.
Config TDP Lock	Enable or disable Config TDP Lock.

SATA Configuration Submenu

BIOS setting	Description
SATA Controller(s)	Enable or disable SATA devices.
SATA Mode Selection	Select SATA mode selection. (Determines how SATA controllers operate).
Aggressive LPM Support	Enable or disable PCH to aggressively enter link power state.
SATA Controller Speed	Indicates the maximum speed the SATA controller can support.
Software Feature Mask Configuration	–.
Serial ATA Port 0	Enable or disable serial ATA port.
Serial ATA Port 0 HotPlug	Designates this port as hot pluggable.
External SATA	Enable or disable External SATA support.
SATA Device Type	Select SATA port is connected to hard disk drive or Solid-State drive.
Serial ATA Port 1	Enable or disable serial ATA port.
Serial ATA Port 1 HotPlug	Designates this port as hot pluggable.
External SATA	Enable or disable External SATA support.
SATA Device Type	Select SATA port is connected to hard disk drive or Solid-State drive.

PCH-FW Configuration Submenu

BIOS setting	Description
Firmware Update Configuration	**ME FW Image Re-Flash**: Enable or disable ME FW image re-Flash function.

USB Configuration Submenu

BIOS setting	Description
Legacy USB Support	Enable or disable legacy USB support. Auto option disables legacy support if no USB devices are connected. Disable option keeps USB devices available only for EFI applications.
USB3.0 Support	Enable or disable USB3.0 (XHCI) controller support.
XHCI Hand-off	Enable or disable XHCI hand-off. This is a work-around for OS without XHCI hand-off support. The XHCI ownership modify is claimed by XHCI driver.
EHCI Hand-off	Enable or disable EHCI hand-off. This is a workroom for OS without EHCI hand-off support. The EHCI ownership modify is claimed by EHCI driver.
USB Mass Storage Driver Support	Enable or disable USB mass storage driver support.
USB transfer time-out	Select time-out section. The time-out value for control, bulk, and interrupt transfers.
Device reset time-out	Select device time-out section. USB mass storage devices start unit command time-out.
Device power-up delay	Select device power-up section. Maximum time the device takes before it properly reports itself to the host controller. **Auto** uses a default value: for a root port, it is 100 ms, for a hub port the delay is taken from the hub descriptor.

Embedded Controller Configuration Submenu

BIOS setting	Description
iManager WatchDog IRQ	Select Irq Number eBrain WatchDog.
EC Power Saving Mode	Select EC Power-Saving Mode.
CPU Shutdown Temperature	Select CPU shutdown temperature.
Backlight Enable Polarity	Select backlight enable polarity for PWM or DC.
EC Watch Dog Function	Select Watch Dog Timer.

IT8768E Super IO Configuration Submenu

BIOS setting	Description
Serial Port 1 Configuration	**Serial Port**: Enable or disable the COM port.

Serial Port Console Redirection Submenu

BIOS setting	Description
COM 0	**Console Redirection**: Enable or disable the Console Redirection.

Enclosed PC Chipset Menu

Chipset BIOS Features Tab

For details about the **Chipset** submenus, refer to:

- PCH-IO Configuration
- System Agent (SA) Configuration

PCH-IO Configuration Menu

BIOS setting	Description
PCI Express Configuration	Select PCI Express Configuration settings.
USB Per Port Control	Select USB Configuration settings.
LAN1 Controller	Enable or disable LAN1.
Wake on LAN	Enable or disable integrated LAN to wake the system.
LAN2 Controller	Enable or disable LAN2.
PCIE Wake From S5	Enable or disable wake the PCIE From S5.
SLP_S4 Assertion Width	Select minimum assertion width of the SLP_S4#signal.

PCI Express Configuration Submenu

BIOS setting	Description
PCI Express Clock Gating	Enable or disable PCI Express Clock Gatting for each root port.
DMI Link ASPM Control	Enable or disable DMI Link ASPM Control.
DMI Link Extended Synch Control	Enable or disable DMI Link Extended Synch Control.
PCIe-USB Glitch W/A	Enable or disable PCIe-USB Glitch W/A
PCI Express Root Port Function Swapping	Enable or disable PCI Express Root Port Function Swapping.
Subtractive Decode	Enable or disable PCI Express Subtractive Decode.

USB Configuration Submenu

BIOS setting	Description
USB Precondition	Enable or disable USB Precondition.
XHCI Mode	Select mode of operation of XHCI mode.
XHCI Idle L1	Enable or disable XHCI Idle L1.
BTCG	Enable or disable trunk clock gating.
USB Ports Per-Port Disable Control	Enable or disable USB Ports Per-Port Disable Control.

System Agent (SA) Configuration Menu

BIOS setting	Description
VT-d	Enable or disable VT-d function.
Graphics Configuration	Select graphics setting.
Memory Configuration	Memory Configuration Parameters.

Enclosed PC Boot Menu

Boot Settings Configuration Menu

Boot setting	Description
Setup Prompt Timeout	Select the number of seconds to wait for setup activation key.
Bootup NumLock state	Select the keyboard **NumLock** state.
Quiet Boot	Enables or disables **Quiet Boot** option.
CSM Parameters	Select boot option filter.

CSM Parameters Submenu

Boot setting	Description
Launch CSM	Enables or disables launch CSM.
Boot option filter	Select boot option filter setting.
Launch PXE OpROM policy	Select launch PXE OpROM policy setting.
Launch Storage OpROM policy	Select launch storage OpROM policy setting.
Launch Video OpROM policy	Select launch video OpROM policy setting.
Other PCI device ROM priority	Select other PCI device ROM priority setting.

Enclosed PC Security Menu

Security Setup

Select **Security Setup** from the main BIOS setup menu. All **Security Setup** options, such as password protection, are described in this section. To access the submenu for the following items, select the item and press **Enter**.

To change the administrator or user password, select the **Administrator / User Password** option, press **Enter** to access the submenu, and then type the password.

Account and Authority Management

⚠ WARNING

UNAUTHORIZED DATA ACCESS

- Immediately change any default passwords to new and secure passwords.
- Do not distribute passwords to unauthorized or unqualified personnel.
- Limit access rights to users essential to your application needs only.

Failure to follow these instructions can result in death, serious injury, or equipment damage.

Username	Password
admin	ipc1234

NOTE: Above are the current default settings; it is recommended to modify the default password immediately.

Enclosed PC Save & Exit Menu

Menu

BIOS setting	Description
Save Changes and Exit	When the system configuration is complete, select this option to save changes, exiting the BIOS setup and, if necessary, reboot the computer to take into account all system configuration parameters.
Discard Changes and Exit	Select this option to quit setup without making any permanent changes to the system configuration.
Save Changes and Reset	Selecting this option displays a confirmation message box. On confirming, you save changes to the BIOS settings, save the settings to CMOS, and restart the system.
Discard Changes and Reset	Select this option to quit BIOS setup without making any permanent changes to the system configuration and reboot the computer.
Save Changes	Select this option to save the system configuration changes without exiting the BIOS setup menu.
Discard Changes	Select this option to discard any current changes and load previous system configuration.
Restore Defaults	Select this option to configure automatically all BIOS setup items to the optimal default settings. The optimal defaults are designed for maximum system performance, but may not work best for all computer applications. Do not use the optimal defaults if the user's computer is experiencing system configuration problems.
Save as User Defaults	When the system configuration is complete, select this option to save changes as the user defaults without exit BIOS setup menu.
Restore User Defaults	Select this option to restore the user defaults.

Chapter 8
Hardware Modifications

Subject of This Chapter

This chapter describes the hardware modifications for the Harmony S-Panel PC.

What Is in This Chapter?

This chapter contains the following sections:

Section	Topic	Page
8.1	Before Modifications	98
8.2	Storages Modifications	100
8.3	Optional Cards and Optional Interfaces	109

Section 8.1
Before Modifications

Before Making Modifications

Introduction

For detailed installation procedures for optional units, refer to the OEM (original equipment manufacturer) installation guide included with the optional unit.

⚠⚠ DANGER

HAZARD OF ELECTRIC SHOCK, EXPLOSION OR ARC FLASH

- Remove all power from the device before removing any covers or elements of the system, and prior to installing or removing any accessories, hardware, or cables.
- Unplug the power cable from both the Harmony Industrial PC and the power supply.
- Always use a properly rated voltage sensing device to confirm that power is off.
- Replace and secure all covers or elements of the system before applying power to the unit.
- Use only the specified voltage when operating the Harmony Industrial PC. The AC unit is designed to use 100...240 Vac input. The DC unit is designed to use 24 Vdc input. Always check whether your device is AC or DC powered before applying power.

Failure to follow these instructions will result in death or serious injury.

⚠ DANGER

POTENTIAL FOR EXPLOSION IN HAZARDOUS LOCATION

Do not use these products in hazardous locations.

Failure to follow these instructions will result in death or serious injury.

During operation, the surface temperature of the heat sink may exceed 70 °C (158 °F).

⚠ WARNING

RISK OF BURNS

Do not touch the surface of the heat sink during operation.

Failure to follow these instructions can result in death, serious injury, or equipment damage.

⚠ CAUTION

OVERTORQUE AND LOOSE HARDWARE

- Do not exert more than 0.5 Nm (4.5 lb-in) of torque when tightening the installation fastener, enclosure, accessory, or terminal block screws. Tightening the screws with excessive force can damage the installation fastener.
- When fastening or removing screws, ensure that they do not fall inside the Harmony Industrial PC chassis.

Failure to follow these instructions can result in injury or equipment damage.

⚠ CAUTION

STATIC SENSITIVE COMPONENTS

Harmony Industrial PC Internal components, including accessories such as RAM modules and expansion boards, can be damaged by static electricity.

- Keep static-producing materials (plastic, upholstery, carpeting) out of the immediate work area.
- Do not remove ESD-sensitive components from their anti-static bags until you are ready to install them.
- When handling static-sensitive components, wear a properly grounded wrist strap (or equivalent).
- Avoid unnecessary contact with exposed conductors and component leads with skin or clothing.

Failure to follow these instructions can result in injury or equipment damage.

Section 8.2
Storages Modifications

Overview

This section shows the installation of the HDD/SSD drives and the CFast card.

What Is in This Section?

This section contains the following topics:

Topic	Page
HDD/SSD Drive Description and Installation	101
Memory Card Installation	106

HDD/SSD Drive Description and Installation

Overview

This device does not support hot swapping. Before any hardware modification, shut down Windows in an orderly fashion and remove the power from the device.

⚠ ⚠ DANGER

HAZARD OF ELECTRIC SHOCK, EXPLOSION OR ARC FLASH

- Remove all power from the device before removing any covers or elements of the system, and prior to installing or removing any accessories, hardware, or cables.
- Unplug the power cable from both the Harmony Industrial PC and the power supply.
- Always use a properly rated voltage sensing device to confirm power is off.
- Replace and secure all covers or elements of the system before applying power to the unit.
- Use only the specified voltage when operating the Harmony Industrial PC. The DC unit is designed to use 24 Vdc input.

Failure to follow these instructions will result in death or serious injury.

HDD/SSD Drive Installation

NOTICE

ELECTROSTATIC DISCHARGE

Take the necessary protective measures against electrostatic discharge before attempting to remove the Harmony Industrial PC cover.

Failure to follow these instructions can result in equipment damage.

⚠ CAUTION

OVERTORQUE AND LOOSE HARDWARE

- Do not exert more than 0.5 Nm (4.5 lb-in) of torque when tightening the installation fastener, enclosure, accessory, or terminal block screws. Tightening the screws with excessive force can damage the installation fastener.
- When fastening or removing screws, ensure that they do not fall inside the Harmony Industrial PC chassis.

Failure to follow these instructions can result in injury or equipment damage.

NOTE: Be sure to remove the power before attempting this procedure.

This table describes how to install an HDD/SSD drive of the S-Panel PC:

Step	Action
1	Disconnect the power cord of the S-Panel PC.
2	Touch the housing or ground connection (not the power supply) to discharge any electrostatic charge from your body.
3	Remove the 2 screws from the rear cover of the S-Panel PC: 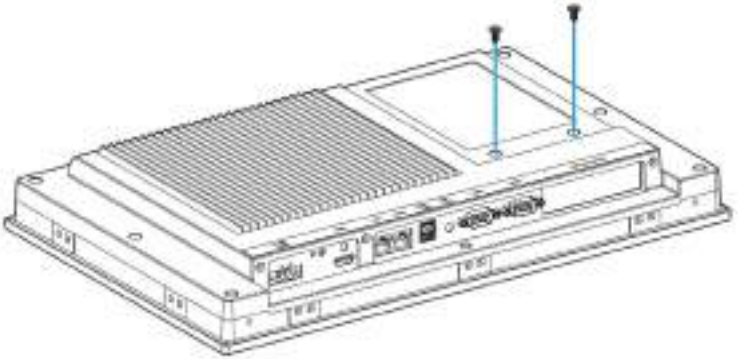
4	Install the 2.5" SATA HDD/SSD on the HDD/SSD bracket. Fasten the 4 screws on the side of HDD/SSD bracket (the screws are in the accessory box): 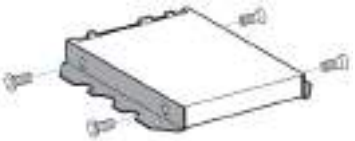
5	Install the dampers in the brackets. Connect the HDD/SSD into the SATA connector. Install it in the S-Panel PC and fasten it with the 4 screws: 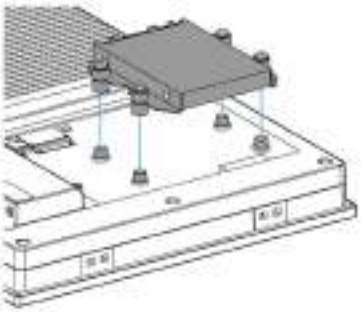

Step	Action
6	Replace the rear cover and fasten with the 2 screws for the S-Panel PC: 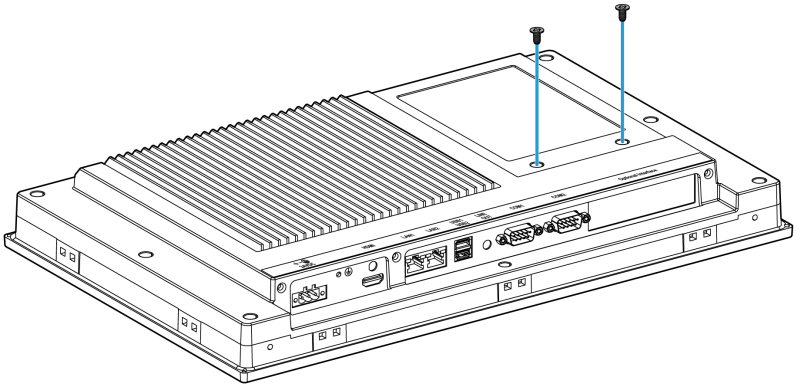 **NOTE:** The recommended torque to tighten these screws is 0.5 Nm (4.5 lb-in).

This table describes how to install an HDD/SSD drive of the Enclosed PC:

Step	Action
1	Disconnect the power cord of the Enclosed PC.
2	Touch the housing or ground connection (not the power supply) to discharge any electrostatic charge from your body.
3	Remove the 4 screws from the rear cover of the Enclosed PC: 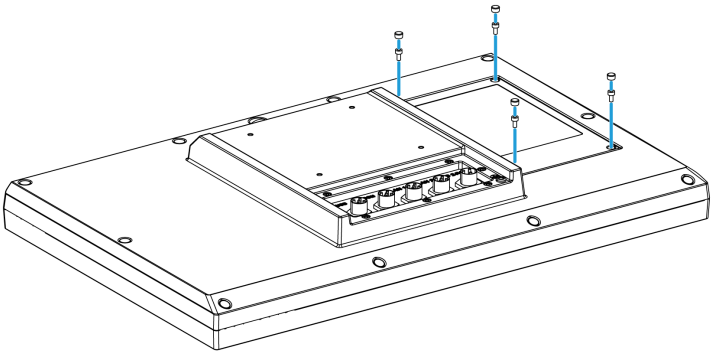

Step	Action
4	Remove the HDD/SSD bracket from the Enclosed PC: 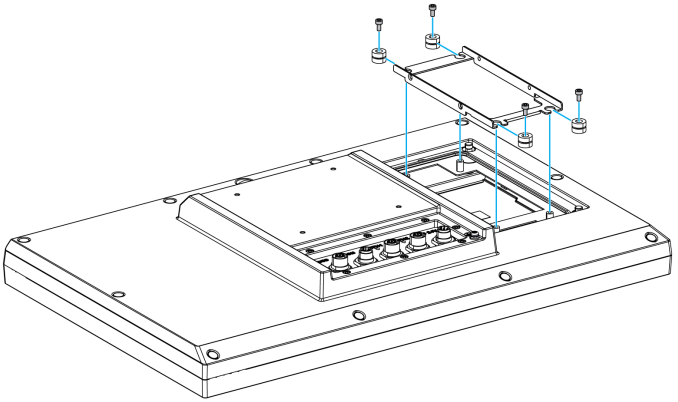
5	Install the 2.5" SATA HDD/SSD on the HDD/SSD bracket. Fasten the 4 screws on the side of HDD/SSD bracket (the screws are in the accessory box):
6	Connect the HDD/SSD into the SATA connector. Install the dampers in the brackets. Install the HDD/SSD in the Enclosed PC and fasten it with the 4 screws: 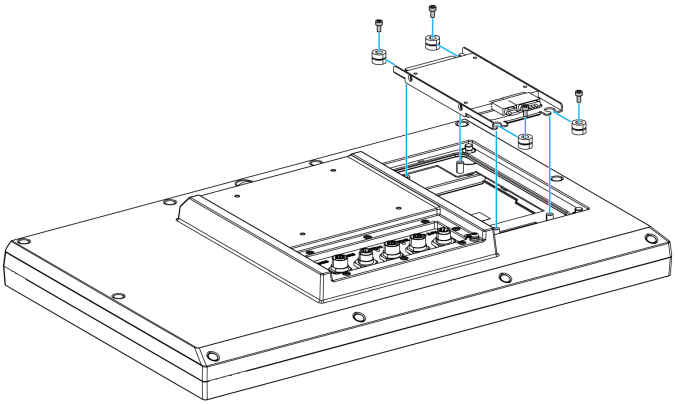

Step	Action
7	Replace the rear cover and fasten with the 4 screws for the Enclosed PC: 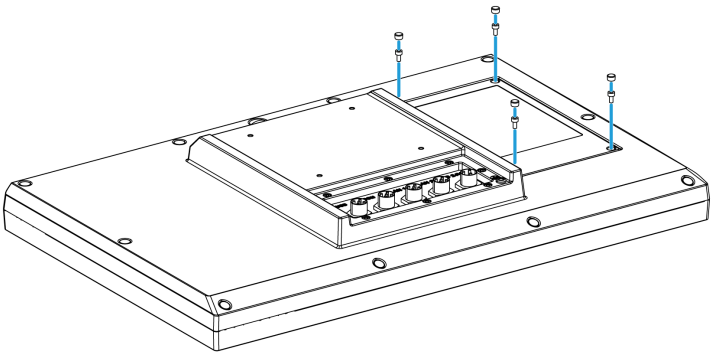 **NOTE:** The recommended torque to tighten these screws is 0.5 Nm (4.5 lb-in).

Memory Card Installation

Introduction

The Panel PC controller operating system views the CFast card as a hard disk. Proper handling and care of the CFast card helps extend the life of the card. Familiarize yourself with the card before attempting insertion or removal of the card.

Before installing or removing a card, shut down Windows® in an orderly fashion and remove all power from the device.

⚠ ⚠ DANGER

HAZARD OF ELECTRIC SHOCK, EXPLOSION OR ARC FLASH

- Remove all power from the device before removing any covers or elements of the system, and prior to installing or removing any accessories, hardware, or cables.
- Unplug the power cable from both the Harmony Industrial PC and the power supply.
- Always use a properly rated voltage sensing device to confirm power is off.
- Replace and secure all covers or elements of the system before applying power to the unit.
- Use only the specified voltage when operating the Harmony Industrial PC. The DC unit is designed to use 24 Vdc input.

Failure to follow these instructions will result in death or serious injury.

⚠ CAUTION

MEMORY CARD DAMAGE AND DATA LOSS

- Remove all power before making any contact with an installed memory card.
- Use only memory cards sold by Schneider Electric as accessory for this product. The performance of the Harmony Industrial PC has not been tested using memory cards from other manufacturers.
- Confirm that the memory card is correctly oriented before insertion.
- Do not bend, drop, or strike the memory card.
- Do not touch the memory card connectors.
- Do not disassemble or modify the memory card.
- Keep the memory card dry.

Failure to follow these instructions can result in injury or equipment damage.

NOTICE
ELECTROSTATIC DISCHARGE Take the necessary protective measures against electrostatic discharge before attempting to remove the Harmony Industrial PC cover. **Failure to follow these instructions can result in equipment damage.**

Inserting the Memory Card

The procedure describes how to insert the memory card.

Step	Action
1	Disconnect the power cord to the S-Panel PC.
2	Touch the housing or ground connection (not the power supply) to discharge any electrostatic charge from your body.
3	Remove the two screws from the rear cover and remove it: 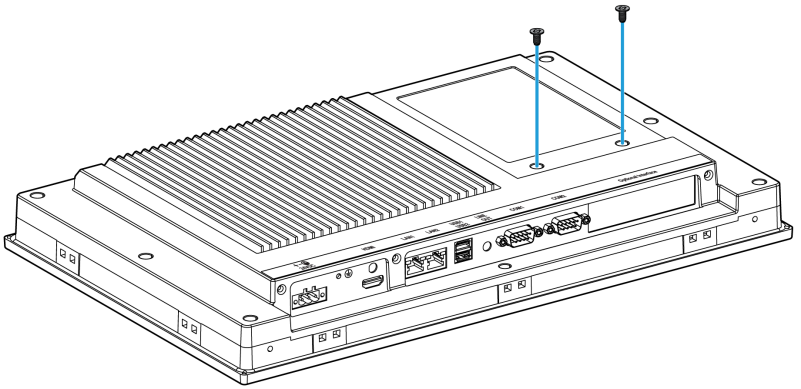
4	Insert the CFast card firmly into the card slot: 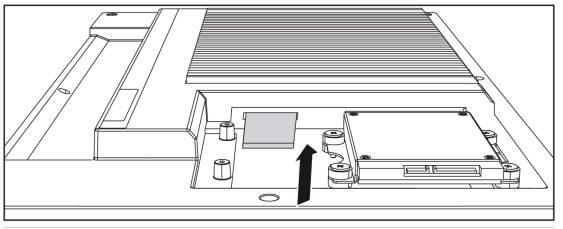

Step	Action
5	Replace the rear cover and fasten it with the screws: 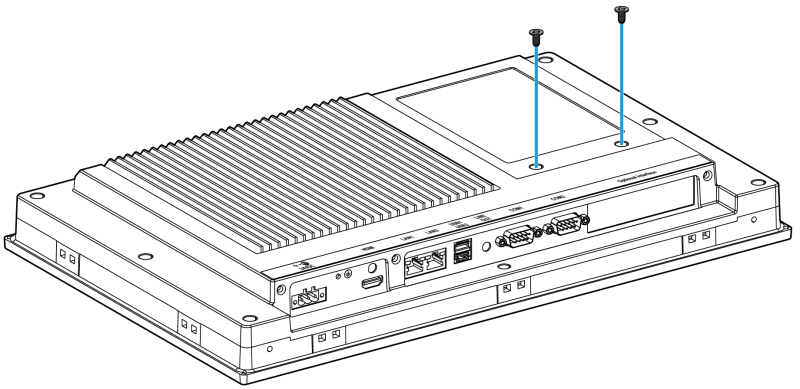 **NOTE:** The recommended torque to tighten these screws is 0.5 Nm (4.5 lb-in).

CFast Card Installation

Refer to the relevant procedure in the software installation guide for Harmony S-Panel PC and terminals. The installation guide is shipped with the product.

Section 8.3
Optional Cards and Optional Interfaces

Overview

This section describes the optional cards, optional interfaces, and their installation.

What Is in This Section?

This section contains the following topics:

Topic	Page
Optional Interface Installation	110
16DI/8DO Interface Description	116
RS-232, RS-422/485 Interface Description	122
Ethernet IEEE Interface Description	133
Audio Interface Description	136
CANopen Interface Description	140
Profibus DP Interface Description	144
Wireless LAN Interface Card Description	147
USB Interface Description	152
NVRAM Card Description	155
GPRS Interface Description	157
VGA and DVI Interface Description	161
4G (mini PCIe) Interface Description	169

Optional Interface Installation

Introduction

Before installing or removing an interface module, shut down Windows in an orderly fashion and remove the power from the device.

⚠ ⚠ DANGER

HAZARD OF ELECTRIC SHOCK, EXPLOSION OR ARC FLASH

- Remove all power from the device before removing any covers or elements of the system, and prior to installing or removing any accessories, hardware, or cables.
- Unplug the power cable from both the Harmony Industrial PC and the power supply.
- Always use a properly rated voltage sensing device to confirm power is off.
- Replace and secure all covers or elements of the system before applying power to the unit.
- Use only the specified voltage when operating the Harmony Industrial PC. The DC unit is designed to use 24 Vdc input.

Failure to follow these instructions will result in death or serious injury.

Optional Interface

Compatible table:

Part number	Description	S-Panel PC	Enclosed PC
HMIYMINUSB1	Interface USB 3.0, 2 x USB	Yes	Not applicable
HMIYMINAUD1	Interface audio BKT, 1 x LI/LO/MIC	Not applicable	Not applicable
HMIYMINSL24851	Interface 2 x RS-422/485 isolation	Yes	Not applicable
HMIYMINSL44851	Interface 4 x RS-422/485 isolation, DB 37, cable	Yes	Not applicable
HMIYMINSL22321	Interface 2 x RS-232 isolatation	Yes	Not applicable
HMIYMINSL42321	Interface 4 x RS-232, DB37, cable	Yes	Not applicable
HMIYMINAUD21	Interface audio 1 x LI/LO/MIC	Yes(1)	Not applicable
HMIYMINATPM201	Interface TPM 2.0	Not applicable	Not applicable
HMIYMINIO1	Interface 16DI/8DO, 1 x DB37, 2 m cable	Yes	Not applicable
HMIYMIN1ETH1	Interface IEEE158, 1 x RJ45	Yes	Not applicable
HMIYMINWIFI1	Interface WiFi, AC3160, 2 x antenna	Yes	Not applicable
HMIYMINGPRS1	Interface 3G, C109, 1 x antenna	Yes	Not applicable
HMIYMIN4GUS1	Interface 4G US, 1 x antenna	Yes	Not applicable

(1) S-Panel PC has default audio line out. For Line in, Line out and Mic in, please use mini PCIe HMIYMINAUD21.
(2) Only support one Interface bracket; either with 2 x VGA or DVI-D bracket.

Part number	Description	S-Panel PC	Enclosed PC
HMIYMIN4GEU1	Interface 4G EU/ASIA, 1 x antenna	Yes	Not applicable
HMIYADDPDVI11	Interface DP to DVI adaptor, active mode	Not applicable	Not applicable
HMIYMINDVII1	Interface 1 x DVI-I	Yes	Not applicable
HMIYMINVGADVID1	Interface, 1 x DVI-D, 2 x VGA, two brackets	Yes(2)	Not applicable
HMIYMINDP1	Interface display, HD BaseT TX	Not applicable	Not applicable
HMIYMINPRO1	Interface Profibus w/NVRAM, 128 Mb + ML	Yes	Not applicable
HMIYMINCAN1	Interface fieldbus, 2 x CANopen	Yes	Not applicable
(1) S-Panel PC has default audio line out. For Line in, Line out and Mic in, please use mini PCIe HMIYMINAUD21. (2) Only support one Interface bracket; either with 2 x VGA or DVI-D bracket.			

The figure shows the possible interfaces:

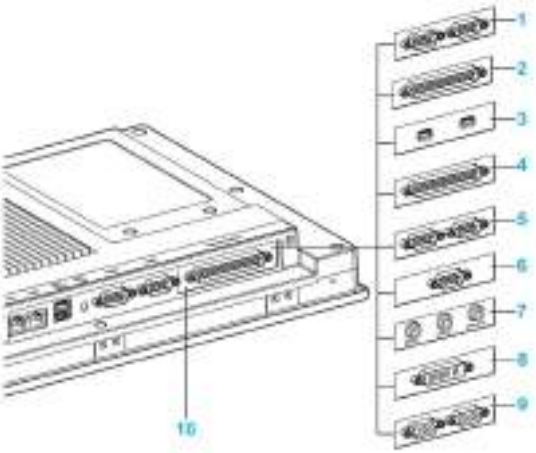

1 2 x RS-232/422/485 interface
2 4 x RS-232/422/485 interface
3 USB interface
4 DIO interface
5 CANopen interface
6 Profibus DP interface
7 Audio interface
8 DVI interface
9 VGA interface
10 Optional interface

The table shows the type and the interface part numbers:

Designation	Part number	Interface	PCIe card	Pin header from system	Interface plate
NVRAM card	HMIYMINNVRAM1	Card NVRAM (non-volatile random-access memory)	1	–	–
RS-232/422/485 interface	HMIYMINSL24851	2 x RS-422/485 isolated	1	–	1
	HMIYMINSL44851	4 x RS-422/485			
	HMIYMINSL22321	2 x RS-232 isolated			
	HMIYMINSL42321	4 x RS-232			
DIO interface *(see page 116)*	HMIYMINIO1	16 x DI / 8 x DO	1	–	1
Ethernet interface *(see page 133)*	HMIYMIN1ETH1	1 x Ethernet gigabit IEEE1588	1	–	1
CANopen interface *(see page 140)*	HMIYMINCAN1	2 x CanOpen/CanBus	1	–	1
Profibus DP interface *(see page 144)*	HMIYMINPRO1	1 x Profibus DP master NVRAM	1	–	1
USB interface *(see page 152)*	HMIYMINUSB1	2 x USB 3.0 (card with pin-header)	1	1	1
Wireless LAN interface *(see page 147)*	HMIYMINWIFI1 HMIYMINWIFI2	1 x Wireless LAN with mPCIe card and 2 x antennas	1	–	1
GPRS interface *(see page 157)*	HMIYMINGPRS1	1 x GPRS (general packet radio service) card with mPCIe card	1		1
Audio mini PCIe interface *(see page 136)*	HMIYMINAUD21	1 x Audio	1	–	1
DVI-I interface *(see page 161)*	HMIYMINDVII1	1 x DVI-I	1	–	1
VGA and DVI-D interface *(see page 161)*	HMIYMINVGADVID1	1 x DVI-D	1	–	1
		2 x VGA	1	–	1
4G for US interface *(see page 169)*	HMIYMIN4GUS1	4G interface for US and antenna	1	–	1
4G for EU/ASIA interface *(see page 169)*	HMIYMIN4GEU1	4G interface for EU/Asia and antenna	1	–	1

Interface Installation

Before installing or removing a mini PCIe card, shut down Windows in an orderly fashion and remove the power from the device.

⚠ DANGER

POTENTIAL FOR EXPLOSION IN HAZARDOUS LOCATION

Do not use these products in hazardous locations.

Failure to follow these instructions will result in death or serious injury.

NOTICE

ELECTROSTATIC DISCHARGE

Take the necessary protective measures against electrostatic discharge before attempting to remove the Harmony Industrial PC cover.

Failure to follow these instructions can result in equipment damage.

⚠ CAUTION

OVERTORQUE AND LOOSE HARDWARE

- Do not exert more than 0.5 Nm (4.5 lb-in) of torque when tightening the installation fastener, enclosure, accessory, or terminal block screws. Tightening the screws with excessive force can damage the installation fastener.
- When fastening or removing screws, ensure that they do not fall inside the Harmony Industrial PC chassis.

Failure to follow these instructions can result in injury or equipment damage.

NOTE: Be sure to remove the power before attempting this procedure.

The table describes how to install an interface:

Step	Action
1	Disconnect the power cord to the S-Panel PC.
2	Touch the housing or ground connection (not the power supply) to discharge any electrostatic charge from your body.
3	Remove the 9 screws from the cover and, remove it: 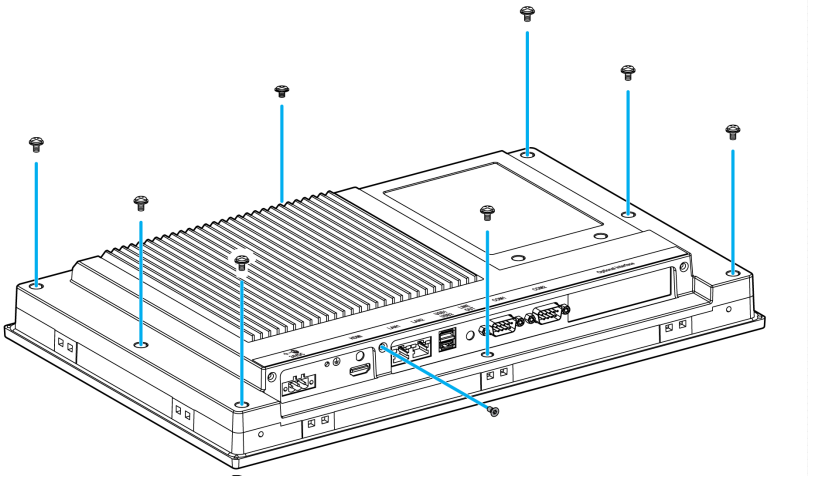
4	Insert the interface into the slot and fasten it to the S-Panel PC with 2 screws: **1** Optional interface **NOTE:** The recommended torque to tighten these screws is 0.5 Nm (4.5 lb-in).

Step	Action
5	Insert the mini PCIe card into the expansion card connector and fasten it with 2 screws: 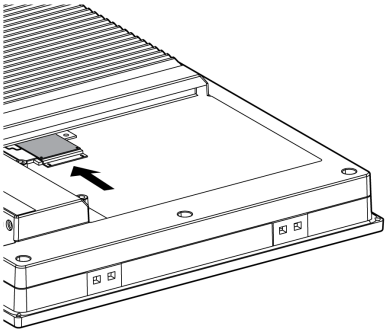 **NOTE:** When using a mini PCIe card with an external cable attached, install a clamp or other device to secure the cable. **NOTE:** A size 2 Phillips screw driver is required. The recommended torque to tighten these screws is 0.5 Nm (4.5 lb-in).
6	Replace the cover and fasten it with the screws: 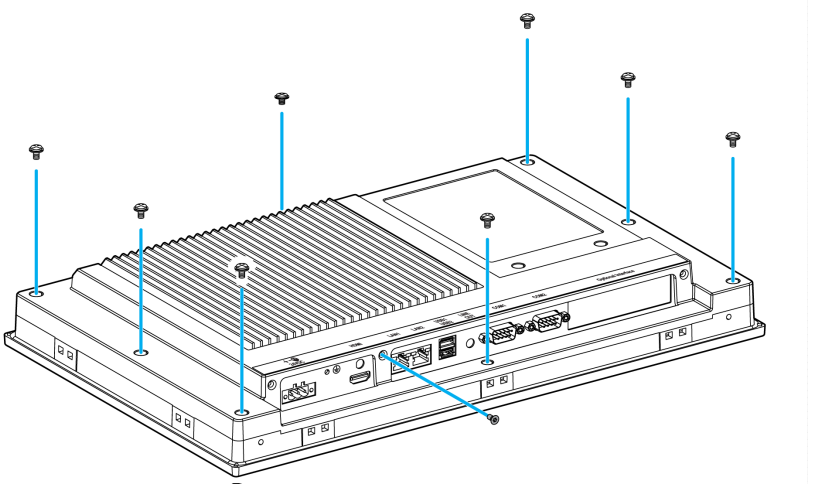 **NOTE:** The recommended torque to tighten these screws is 0.5 Nm (4.5 lb-in).

16DI/8DO Interface Description

Introduction

The HMIYMINIO1 is categorized as a digital input/output module. It can be associated with a DIN rail terminal card, and is compatible with the mini PCIe card.

During card installation, there is no need to set jumpers or DIP switches. Instead, all bus-related configurations such as base I/O address and interrupt are automatically done by the Plug-and-Play function.

The HMIYMINIO1 has a built-in DIP switch that helps define each ID of the card when multiple 16DI/8DO interface has been installed.

The HMIYMINIO1 offers two counter inputs which can perform event counting, frequency measurement and pulse width measurement. The counters on the interface have a counter value match interrupt function. When this interrupt function is enabled, an interrupt signal is generated if the counter value reaches a pre-set counter match value. The counter continues to count until an overflow occurs; then it goes back to its reset value zero and continue the counting process. You can set each individual counter channel to count either falling edge (high-to-low) or rising edge (low-to-high) signals.

The figure shows the 16DI/8DO interface:

The figure shows the 16DI/16DO DIN rail terminal card and cable:

The figure shows the dimensions of the 16DI/8DO interface:

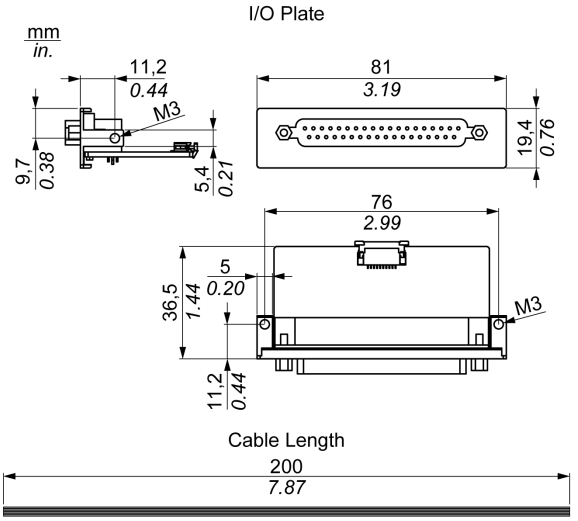

16DI/8DO Interface

The table shows technical data for the 16DI/8DO interface:

Element	Characteristics
General	
Bus type	mini PCIe card revision 1.2
Connectors	1 x socket D-Sub 37-pin
Power consumption	Typical: 400 mA at 3.3 Vdc, maximum: 520 mA at 3.3 Vdc
Isolated digital input	
Input channels	16
Input voltage (wet contact)	Logic 0: 0...3 Vdc, logic 1: 10...30 Vdc
Input voltage (dry contact)	Logic 0: open, logic 1: shorted to GND
Input current	10 Vdc at 2.97 mA, 20 Vdc at 6.35 mA, 30 Vdc at 9.73 mA
Input resistance	5 KΩ
Interrupt capable channels	2, IDI0 and IDI8
Isolation protection	2,500 Vdc
Over voltage protection	70 Vdc
ESD protection	4 kV (contact) 8 kV (air)
Opto-isolator response	50 µs
Isolated digital output	

Element	Characteristics
Output channels	8
Output type	MOSFET
Output voltage	5...30 Vdc
Sink current	Maximum 100 mA/channel
Isolation protection	2,500 Vdc
Opto-isolator response	50 µs
Counter	
Channels	2
Resolution	32 bit
Maximum input frequency	1 kHz

16DI/8DO Connections

The table shows the D-Sub 37-pin assignments:

Assignment	Description	D-Sub 37-pin socket connector
IDI0...15	Isolated digital input	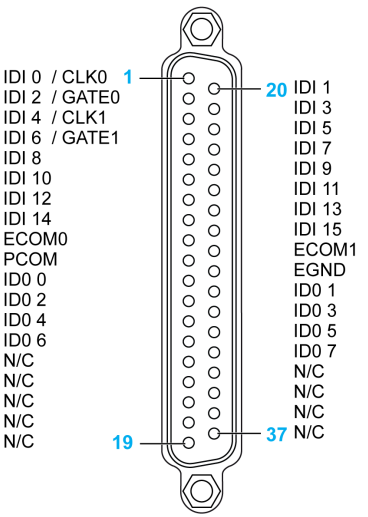
ID0...7	Isolated digital output	
ECOM0	External common of IDI0...7	
ECOM1	External common of IDI8...15	
PCOM	Free wheeling common diode for IDO	
EGND	External ground	
GATE0...1	Counter gate input	
CLK0...1	Counter n clock input	
N/C	Not connected	

16DI/16DO DIN Rail Terminal Card Connections

The table shows the terminal block pin assignments:

Pin	Description
1	IDI 0 / CLK 0
2	IDI 2 / GATE 0
3	IDI 4 / CLK 1
4	IDI 6 / GATE 1
5	IDI 8
6	IDI 10
7	IDI 12
8	IDI 14
9	ECOM0
10	PCOM
11	IDO 0
12	IDO 2
13	IDO 4
14	IDO 6
15	N/C
16	N/C
17	N/C
18	N/C
19	N/C
20	IDI 1
21	IDI 3
22	IDI 5
23	IDI 7
24	IDI 9
25	IDI 11
26	IDI 13
27	IDI 15
28	ECOM1
29	EGND
30	IDO 1
31	IDO 3
32	IDO 5

Pin	Description
33	IDO 7
34	N/C
35	N/C
36	N/C
37	N/C
38	FG

The recommended torque to tighten these screws is 0.4 Nm (3.54 lb-in).

Connected conductor cross section are:

- Single or stranded wire: 0.5 to 2.5 mm^2 (AWG 24 to 12)
- Bar Terminal: 0.25 to 1.5 mm^2
- Striped line length: 7 to 8 mm

Switch and Jumper Settings

The jumper JP1 on the position 0 (default), load default while reset (default). The jumper JP1 on the position 1 (enabled), keeps the last status after reset.

The table shows the switch SW1 to set the ID of the 16DI/8DO interfaces:

ID3	ID2	ID1	ID0	ID	Switch SW1
1	1	1	1	0	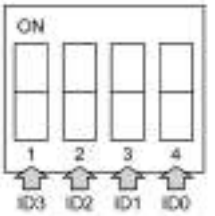
1	1	1	0	1	
1	1	0	1	2	
1	1	0	0	3	
1	0	1	1	4	
1	0	1	0	5	
1	0	0	1	6	
1	0	0	0	7	
0	1	1	1	8	
0	1	1	0	9	
0	1	0	1	10	
0	1	0	0	11	
0	0	1	1	12	
0	0	1	0	13	
0	0	0	1	14	
0	0	0	0	15	

Compatible Table

Part number	Description	S-Panel PC	Enclosed PC
HMIYMINIO1	Interface 16 DI/8DO, 1 x DB 37, 2 m cable	Yes	Not applicable

Cable Routing

S-Panel PC:

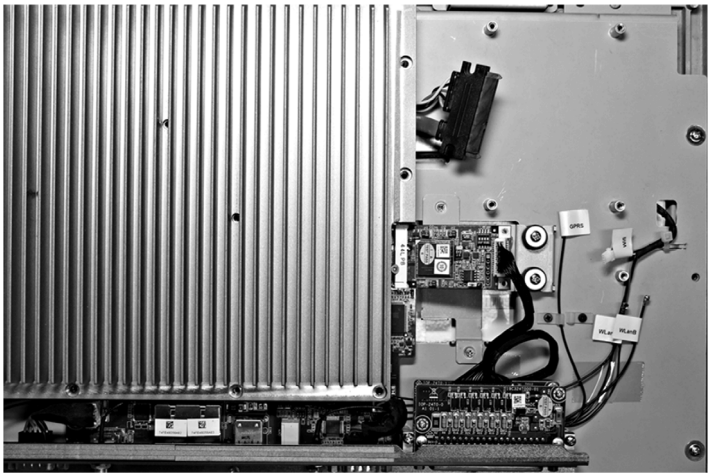

Device Manager and Hardware Installation

Install the driver before you install the interface into the S-Panel PC. The driver installation media for the 16DI/8DO interface is included with the package. After the interface is installed, you can verify whether it is properly installed on your system through the **Device Manager**

NOTE: If you see your device name listed on it but marked with an exclamation sign **!**, it means that your interface has not been correctly installed. In this case, remove the device from the **Device Manager** by selecting its device name and press the **Remove** button. Then go through the driver installation process again.

After the 16DI/8DO interface is properly installed into the S-Panel PC, you can now configure your device using the navigator.

RS-232, RS-422/485 Interface Description

Introduction

The HMIYMINSL series are categorized as communication modules. They are all compatible with the mini PCIe card including isolated / non-isolated RS-232, RS-422/485 communication cards for automation control.

The figure shows the RS-232, RS-422/485 interfaces:

1 2 x RS-232, RS-422/485 interface
2 4 x RS-232, RS-422/485 interface
3 1 x interface cables

The following figure shows the dimensions of the 2 x RS-232, RS-422/485 interface:

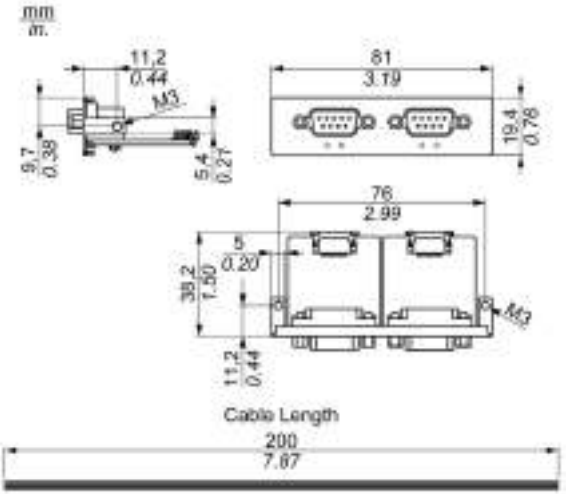

The following figure shows the dimensions of the 4 x RS-232, RS-422/485 interface:

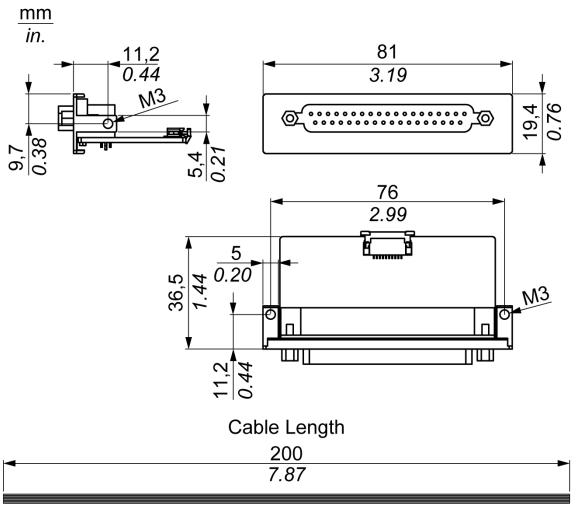

Serial Interface

The table shows technical data for the serial interfaces:

Element	Characteristics			
Part number	**HMIYMINSL24851**	**HMIYMINSL22321**	**HMIYMINSL44851**	**HMIYMINSL42321**
General				
Bus type	Mini PCIe card revision 1.2			
Type	2 x RS-422/485, electrically isolated	2 x RS-232, electrically isolated	4 x RS-422/485, electrically non-isolated	4 x RS-232, electrically non-isolated
Connectors	2 x D-Sub 9-pin, plug		1 x D-Sub 37-pin, socket	
Power consumption	3.3 Vdc at 400 mA		3.3 Vdc at 500 mA	
Communication				
Data bits	5, 6, 7, 8			
FIFO	128 bytes			
Flow control	RTS/CTS Xon/Xoff		RTS/CTS (not supported) Xon/Xoff	RTS/CTS Xon/Xoff
Parity	None, odd, even, Mark and space			
Speed	50 bps...921.6 kbps	50 bps...230.4 kbps	50 bps...921.6 kbps	50 bps...230.4 kbps
Stop bits	1, 1.5, 2			

Element	Characteristics			
Part number	HMIYMINSL24851	HMIYMINSL22321	HMIYMINSL44851	HMIYMINSL42321
Transfer rate				
Transfer rate RS-232	Maximum 115 kbps with cable length ≤ 10 m Maximum 64 kbps with cable length ≤ 15 m			
Transfer rate RS-422/485	Maximum 115 kbps with cable length ≤ 1200 m			

Cable Serial Interface

The table shows the technical data of the cable serial interface:

Element	Characteristics	
Signal lines	Cable cross section RS-232 Cable cross section RS-422 Cable cross section RS-485 Wire insulation Conductor resistance Stranding Shield	4 x 0.16 mm² (26 AWG), tinned Cu. wire 4 x 0.25 mm² (24 AWG), tinned Cu. wire 4 x 0.25 mm² (24 AWG), tinned Cu. wire Protective earth ground ≤ 82 Ω/km Wires stranded in pairs Paired shield with aluminum foil
Grounding line	Cable cross section Wire insulation Conductor resistance	1 x 0.34 mm² (22 AWG/19), tinned Cu. wire Protective earth ground ≤ 59 Ω/km
Outer sheathing	Material Features Cable shielding	PUR mixture Halogen free From tinned Cu. wires

Serial Interface Connections

This interface is used to connect the S-Panel PC to remote equipment, via a cable. The connector is a D-Sub 9-pin plug connector.

By using a long PLC cable to connect to the S-Panel PC, it is possible that the cable can be at an electrical potential that is different from the electrical potential of the panel, even if both are connected to ground.

The serial port that is not isolated has the signal ground (SG) and the functional ground terminals connected inside the panel.

⚠ ⚠ DANGER

ELECTRIC SHOCK

- Make a direct connection between the ground connection screw and ground.
- Do not connect other devices to ground through the ground connection screw of this device.
- Install all cables according to local codes and requirements. If local codes do not require grounding, follow a reliable guide such as the US National Electrical Code, Article 800.

Failure to follow these instructions will result in death or serious injury.

The table shows the D-Sub 9-pin assignments:

Pin	Assignment		
	RS-232	RS-422/485	
1	DCD	TxD-/Data-	D-Sub 9-pin plug connector: 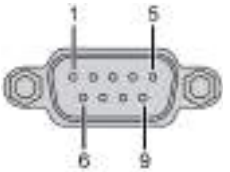
2	RxD	TxD+/Data+	
3	TxD	RxD+	
4	DTR	RxD-	
5	GND	GND/VEE	
6	DSR	RTS-	
7	RTS	RTS+	
8	CTS	CTS+	
9	RI	CTS-	

The table shows the D-Sub 37-pin assignments:

Pin	Assignment		
	RS-232	RS-422/485	
1	N.C.	N.C.	D-Sub 37-pin socket connector: 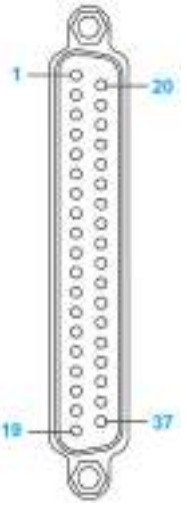
2	DCD3	TxD3-/Data3-	
3	GND	GND/VEE3	
4	CTS3	N.C.	
5	RxD3	TxD3/Data3	
6	RI4	N.C.	
7	DTR4	RxD4-	
8	DSR4	N.C.	
9	RTS4	N.C.	
10	TxD4	RxD4	
11	DCD2	TxD2-/Data2-	
12	GND	GND	
13	CTS2	N.C.	
14	RxD2	TxD2/Data2	
15	RI1	N.C.	
16	DTR1	RxD1-	
17	DSR1	N.C.	
18	RTS1	N.C.	
19	TxD1	RxD1	
20	RI3	N.C.	
21	DTR3	RxD3-	
22	DSR3	N.C.	
23	RTS3	N.C.	
24	TxD3	RXD3	
25	DCD4	TxD4-/Data4-	
26	GND	GND/VEE4	
27	CTS4	N.C.	
28	RxD4	TxD4/Data4+	
29	RI2	N.C.	
30	DTR2	RxD2-	

Pin	Assignment		
	RS-232	RS-422/485	
31	DSR2	N.C.	
32	RTS2	N.C.	
33	TxD2	RxD2	
34	DCD1	TxD1-/Data1-	
35	GND	GND/VEE1	
36	CTS1	N.C.	
37	RxD1	TxD1/Data1+	

Any excessive weight or stress on communication cables may disconnect the equipment.

⚠ CAUTION

LOSS OF POWER

- Ensure that communication connections do not place excessive stress on the communication ports of the Harmony Industrial PC.
- Securely attach communication cables to the panel or cabinet.
- Use only D-Sub 9-pin cables with a locking system in good condition.

Failure to follow these instructions can result in injury or equipment damage.

RS-485 Interface Specificity

NOTE: All the pins of the RS-422 default interface should be used for operation.

The RTS line must be switched each time the driver is sent and received. There is no automatic switch back. This cannot be configured in Windows.

The voltage drop caused by long line lengths can lead to greater potential differences between bus stations, which can hinder communication. You can improve the communication by running a ground wire with the other wires.

NOTE: When using RS-422/485 communication with PLCs, you may need to reduce the transmission speed and increase the TX Wait time.

HMIYMINSL24851 DIP Switch Master/Slave Settings

The table shows the DIP switch Master/Slave settings:

Jumper	Pin	Description
CN2	1-2	RS-422 Master
	2-3	RS-485 / RS-422 Slave (Default)

Terminal Resistor settings:

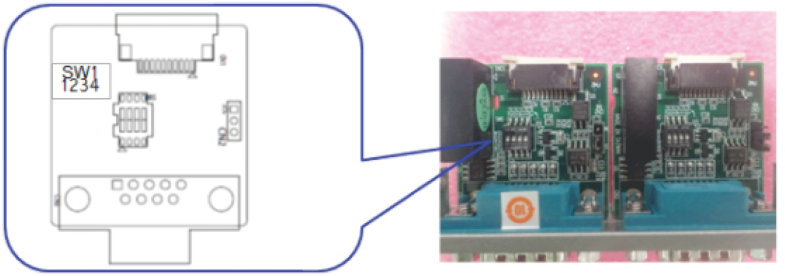

SW	Terminal Resistor	Switch Setting		Line
SW1	120 Ω	1	ON	TxD.Data +/-
		2	ON	RxD +/-
		3	OFF	(Open)
		4		(Open)
	300 Ω	1	OFF	(Open)
		2		(Open)
		3	ON	TxD.Data +/-
		4	ON	RxD +/-

HMIYMINSL44851 DIP Switch Master/Slave Settings

The table shows the DIP switch Master/Slave settings:

COM Port	Switch	Pin	Setting	Description
COM1	SW1	1	ON	RS-422 Master
			OFF	RS-485 / RS-422 Slave (Default)
COM2		2	ON	RS-422 Master
			OFF	RS-485 / RS-422 Slave (Default)
COM3		3	ON	RS-422 Master
			OFF	RS-485 / RS-422 Slave (Default)
COM4		4	ON	RS-422 Master
			OFF	RS-485 / RS-422 Slave (Default)

Terminal Resistor settings:

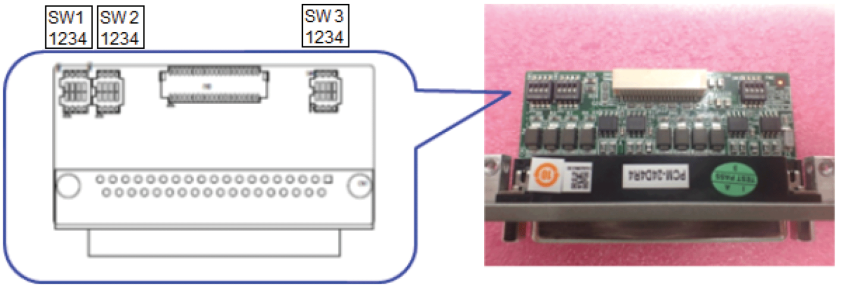

COM Port	Switch	Switch Setting		RS-422 Description	RS-485 Description
COM1	SW2	1	ON	120 Ω between Tx+/Tx-	120 Ω between Data+/Data-
			OFF	Open (Default)	
		2	ON	120 Ω between Rx+/Rx-	Invalid
			OFF	Open (Default)	
COM2		3	ON	120 Ω between Tx+/Tx-	120 Ω between Data+/Data-
			OFF	Open (Default)	
		4	ON	120 Ω between Rx+/Rx-	Invalid
			OFF	Open (Default)	

COM Port	Switch	Switch Setting		RS-422 Description	RS-485 Description
COM3	SW3	1	ON	120 Ω between Tx+/Tx-	120 Ω between Data+/Data-
			OFF	Open (Default)	
		2	ON	120 Ω between Rx+/Rx-	Invalid
			OFF	Open (Default)	
COM4		3	ON	120 Ω between Tx+/Tx-	120 Ω between Data+/Data-
			OFF	Open (Default)	
		4	ON	120 Ω between Rx+/Rx-	Invalid
			OFF	Open (Default)	

Compatible Table

Part number	Description	S-Panel PC	Enclosed PC
HMIYMINSL24851	Interface 2 x RS-422/485 isolation	Yes	Not applicable
HMIYMINSL44851	Interface 4 x RS-422/485 isolation, DB37, cable	Yes	
HMIYMINSL22321	Interface 2 x RS-232 isolation	Yes	
HMIYMINSL42321	Interface 4 x RS-232, DB 37, cable	Yes	

Cable Routing

S-Panel PC and HMIYMINSL42321:

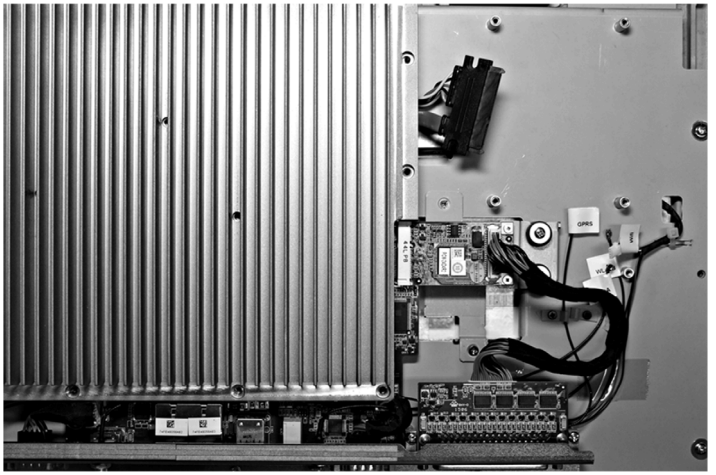

S-Panel PC and HMIYMINSL22321:

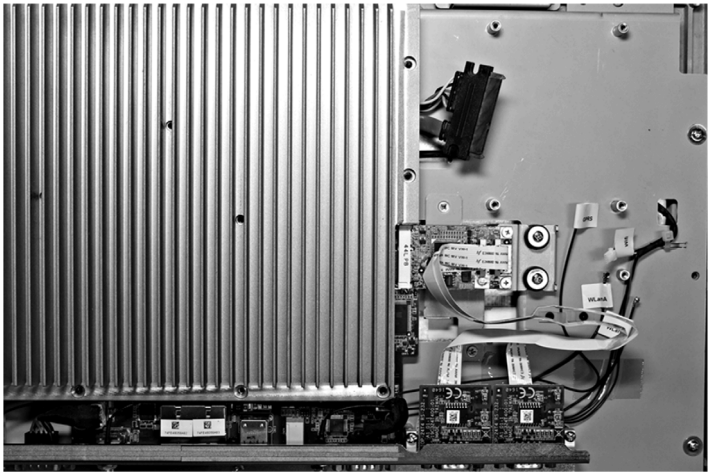

S-Panel PC and HMIYMINSL44851:

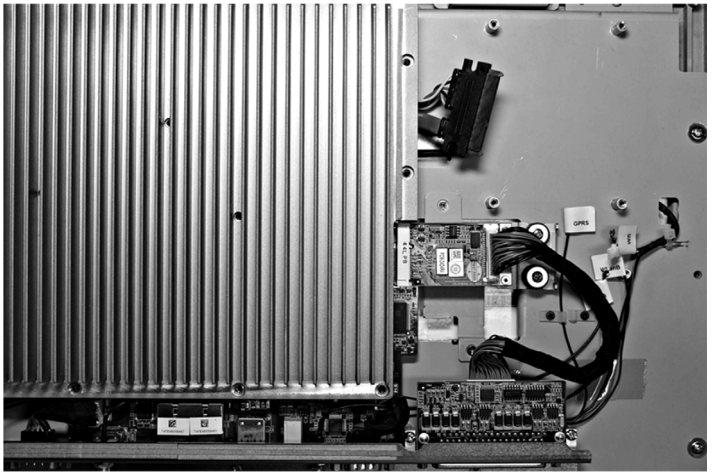

S-Panel PC and HMIYMINSL24851:

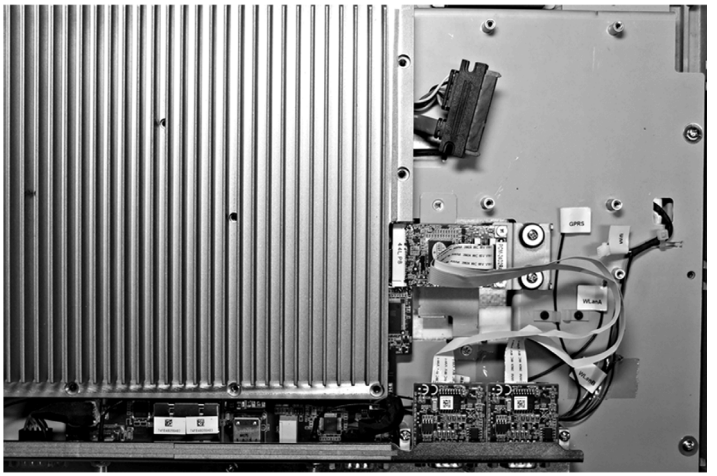

Device Manager and Hardware Installation

Install the driver before you install the interface into the S-Panel PC. The driver installation media is included with the package. After the interface is installed, you can verify whether it is properly installed on your system through the **Device Manager**.

Ethernet IEEE Interface Description

Introduction

The HMIYMIN1ETH1 is categorized as industrial communication with IEEE protocol module. It is compatible with the mini PCIe card.

The figure shows the Ethernet interface:

The figure shows the dimensions of the Ethernet interface:

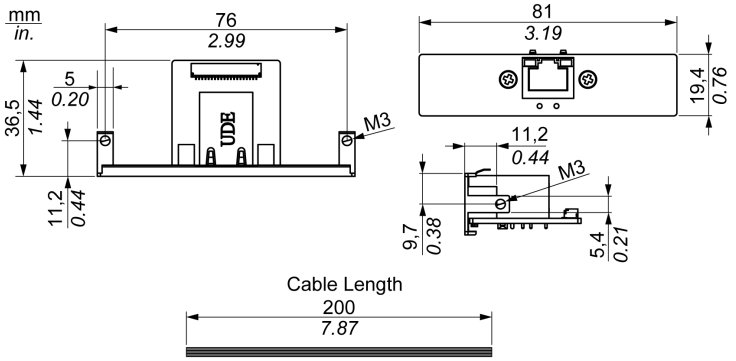

Ethernet Interface Description

The table shows technical data for the Ethernet interface:

Features	Values
General	
Bus type	Mini PCIe card revision 1.2
Connectors	1 x RJ45 GbE half-/full-duplex
Power consumption	Max. 9 W at 3.3 V
Communication	
Speed	10/100/1000 base-TX, auto-negotiation
Support	9 K jumbo frames, hardware-based support for precise time synchronization over Ethernet, wake-on-LAN

Any excessive weight or stress on communication cables may disconnect the equipment.

⚠ CAUTION

LOSS OF POWER

- Ensure that communication connections do not place excessive stress on the communication ports of the S-Panel PC.
- Securely attach communication cables to the panel or cabinet.

Failure to follow these instructions can result in injury or equipment damage.

Compatible Table

Part number	Description	S-Panel PC	Enclosed PC
HMIYMIN1ETH1	Interface IEEE1588 TP, 1 x RJ45	Yes	Not applicable

Cable Routing

S-Panel PC:

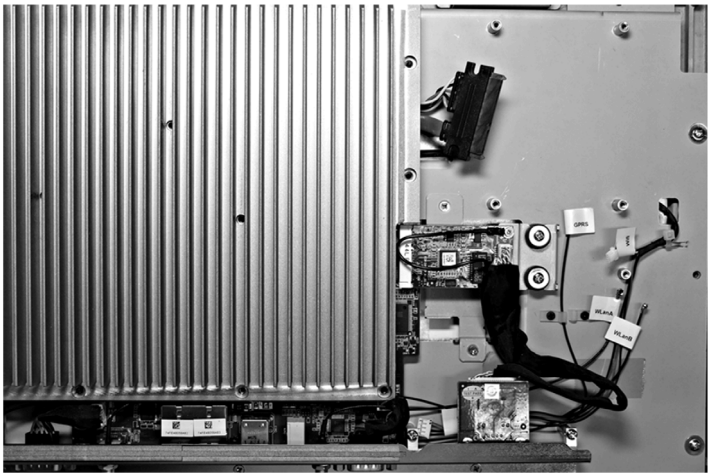

Device Manager and Hardware Installation

Install the driver before you install the interface into the S-Panel PC. The driver installation media is included with the package. After the interface is installed, you can verify whether it is properly installed on your system through the **Device Manager**.

Audio Interface Description

Introduction

The HMIYMINAUD21 is categorized as an audio interface (line in, line out, Mic in). The audio interface is composed of an audio I/O board (include metal plate), a cable for connecting I/O board and the S-Panel PC.

The figure shows the audio interface:

Audio Interface

The table shows technical data for the audio interface:

Element	Characteristics
Connectors	Line in, line out, mic in
Audio output type	Stereo

Compatible Table

Part number	Description	S-Panel PC	Enclosed PC
HMIYMINAUD21	Interface audio BKT, 1 x LI/LO/MIC	Yes(1)	Not applicable
(1) Only support one HMIYMINAUD21.			

Cable Routing

S-Panel PC:

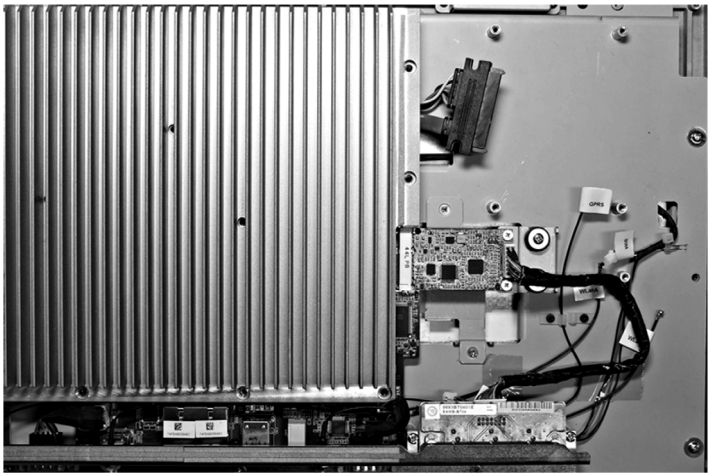

Interface Installation

Before installing or removing a mini PCIe card, shut down Windows operating system in an orderly fashion and remove the power from the device.

NOTICE
ELECTROSTATIC DISCHARGE Take the necessary protective measures against electrostatic discharge before attempting to remove the Harmony Industrial PC cover. **Failure to follow these instructions can result in equipment damage.**

⚠ CAUTION
OVERTORQUE AND LOOSE HARDWARE ● Do not exert more than 0.5 Nm (4.5 lb-in) of torque when tightening the installation fastener, enclosure, accessory, or terminal block screws. Tightening the screws with excessive force can damage the installation fastener. ● When fastening or removing screws, ensure that they do not fall inside the Harmony Industrial PC chassis. **Failure to follow these instructions can result in injury or equipment damage.**

NOTE: Remove the power before attempting this procedure.

The table describes how to install an audio interface:

Step	Action
1	Release mother screw: 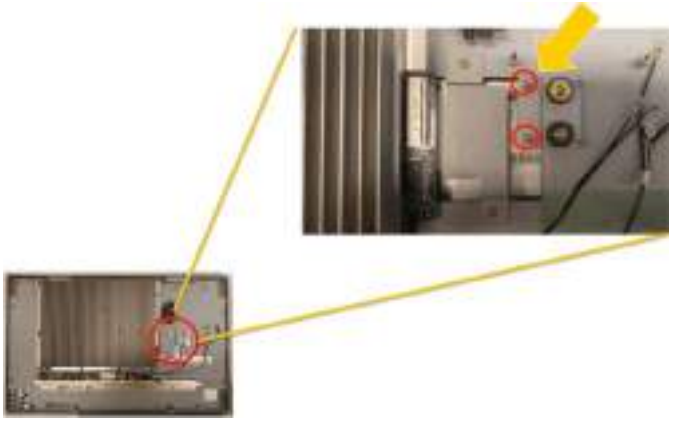
2	Install audio mini PCIe card: 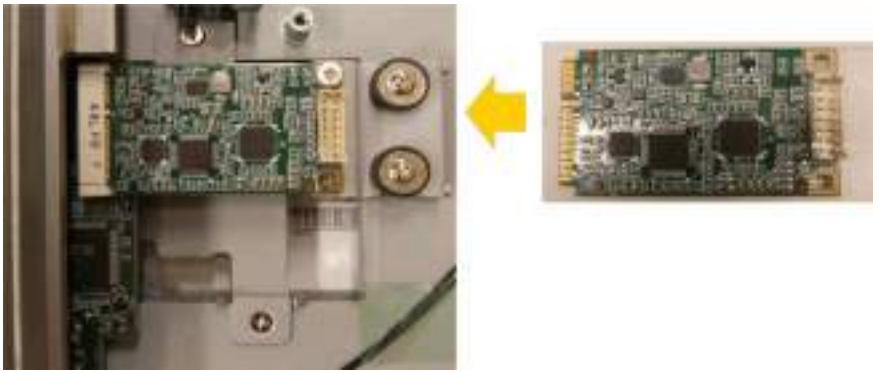

Step	Action
3	Tear down optional interface bracket: 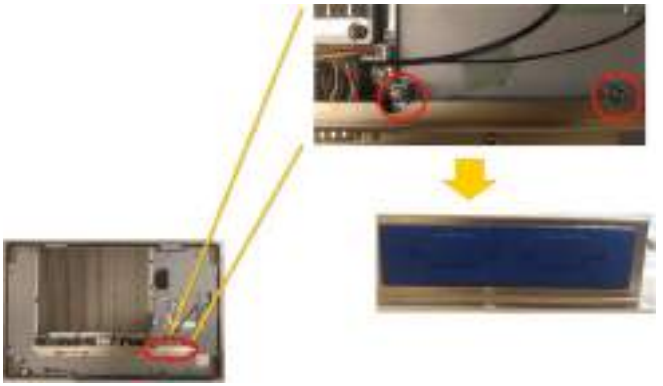
4	Install audio interface bracket and connect the cable: 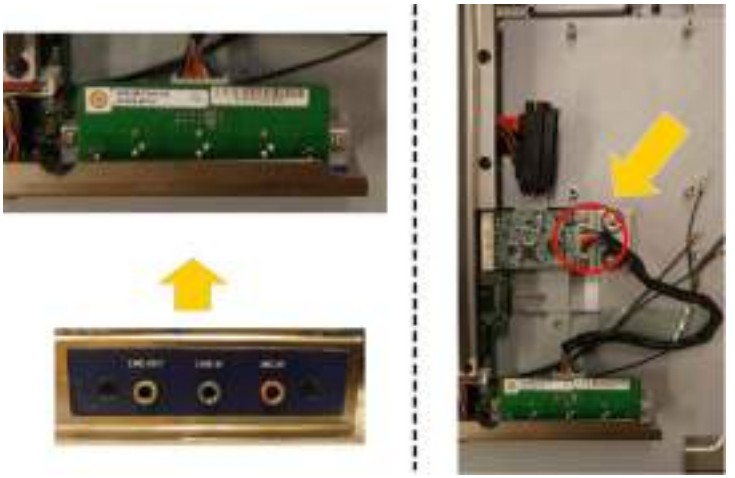

CANopen Interface Description

Introduction

The HMIYMINCAN1 is categorized as industrial communication with fieldbus protocol modules. It is compatible with the mini PCIe card.

The figure shows the CANopen interface:

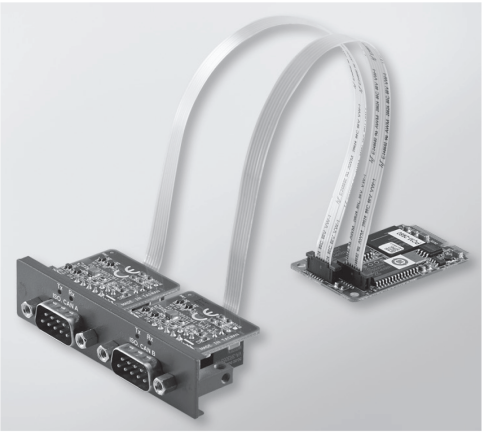

The figure shows the dimensions of the CANopen interface:

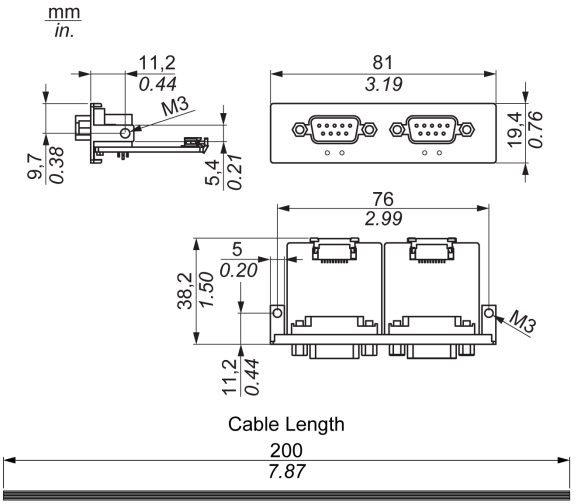

CANopen Interface Description

The table shows technical data for the CANopen interface:

Features	Values
General	
Bus type	Mini PCIe card revision 1.2
Connector	2 x plug D-Sub 9-pin
Power consumption	400 mA at 5 Vdc
Communication	
Protocol	CAN 2.0 A/B
Signal support	CAN_H, CAN_L
Speed	1 Mb/s
CAN frequency	16 MHz
Termination resistor	120 Ω (selected by jumper)

Connections

This interface is used to connect the S-Panel PC to remote equipment, via a cable. The connector is a D-Sub 9-pin plug connector.

By using a long PLC cable to connect to the S-Panel PC, it is possible that the cable can be at an electrical potential that is different from the electrical potential of the panel, even if both are connected to ground.

The table shows the D-Sub 9-pin assignments:

Pin	Assignment	D-Sub 9-pin plug male connector
1	–	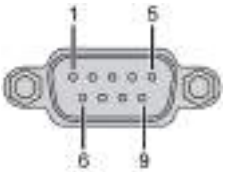
2	CAN_L	
3	GND	
4	–	
5	–	
6	–	
7	CAN_H	
8	–	
9	–	

NOTE: You can set the terminator resistor by jumper setting. The position (pin 1-2) is for the value of the terminator resistor of 120 ohm. The position (pin 2-3) is for without terminator resistor.

Any excessive weight or stress on communication cables may disconnect the equipment.

⚠ CAUTION

LOSS OF POWER

- Ensure that communication connections do not place excessive stress on the communication ports of the Harmony Industrial PC.
- Securely attach communication cables to the panel or cabinet.
- Use only D-Sub 9-pin cables with a locking system in good condition.

Failure to follow these instructions can result in injury or equipment damage.

Compatible Table

Part number	Description	S-Panel PC	Enclosed PC
HMIYMINCAN1	Interface fieldbus, 2 x CANopen	Yes	Not applicable

Cable Routing

S-Panel PC:

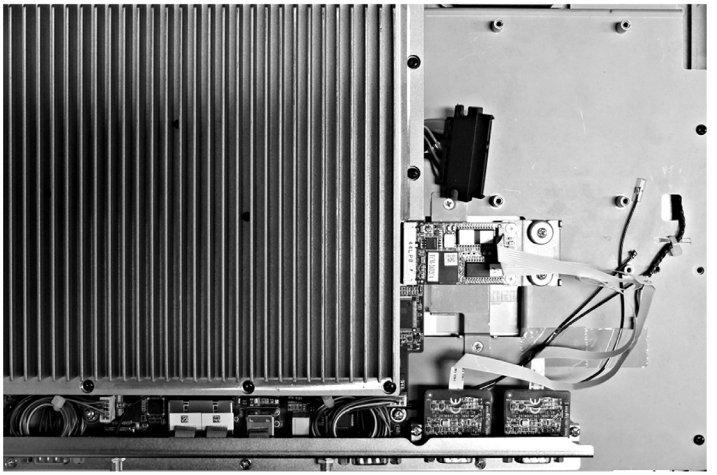

Device Manager and Hardware Installation

Install the driver before you install the interface into the S-Panel PC. The driver installation media for the CANopen interface is included with the package. After the interface is installed, you can verify whether it is properly installed on your system through the **Device Manager**

NOTE: If you see your device name listed on it but marked with an exclamation sign **!**, it means that your Interface has not been correctly installed. In this case, remove the device from the **Device Manager** by selecting its device name and press the **Remove** button. Then go through the driver installation process again.

After the CANopen interface is properly installed into the S-Panel PC, you can now configure your device using the navigator.

The CANopen protocol Library provides a C application programming interface (API) for accessing the CANopen network protocol stack of nodes. It is easy to use, configure, start, and monitor the CANopen devices careless CAN bus, developer focused on CANopen application functionality:

- Read and write object dictionary (local or by SDO)
- Control or monitor the node NMT state (NMT master)
- PDO transmission mode: on request, by SYNC, time driven, event driven
- Support 512 TPDOs and 512 RPDOs
- SYNC producer and consumer
- Heartbeat producer and consumer
- Emergency objects

Profibus DP Interface Description

Introduction

The HMIYMINPRO1 is categorized as industrial communication with fieldbus protocol modules (Profibus DP master or slave). It is compatible with the mini PCIe card.

NOTE: Download the firmware and configuration. Use the corresponding master or slave DTM in the configuration software SYCON.net (HILSCHER CIFX 90E-DP\ET\F\MR\ADVA/+ML).

The figure shows the Profibus DP interface:

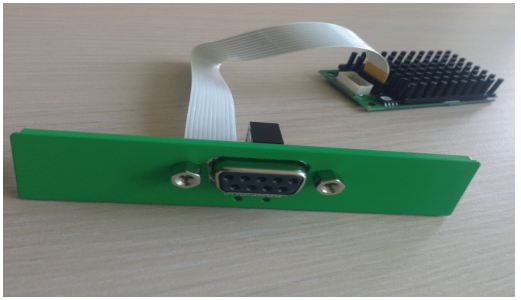

Profibus DP Interface Description

The table shows technical data for the Profibus DP interface:

Features	Values
General	
Bus type	mini PCIe card revision 1.2
Connector	1 x socket D-Sub 9-pin
Memory	8 Mb SDRAM / 4 Mb serial flash EPROM
Size of the dual-port memory	64 Kbyte
Power consumption	600 mA at 3.3 Vdc
Communication	
Protocol	Profibus DP V1
Signal support	RxD/TxD-P, RxD/TxD-N
Transmission rate	33 MHz
Dimensions	60 x 45 x 9.5 mm (2.36 x 1.77 x 0.37 in)

Profibus DP Specification

The table shows the Profibus DP specification:

Features	Profibus DP slave	Profibus DP master
Slave max.	–	125
Cyclic data max.	244 bytes	244 bytes/slave
Acyclic read/write	6,240 bytes	
Maximum number of modules	24	–
Configuration data	244 bytes	244 bytes/slave
Parameter data	237 bytes	

NOTE: To configure the master, a GSD file (device description file) is required. The settings in the used master must comply with the settings in the slave to establish communication. The main parameters are: Station address, ID number, baudrate, and config data (the configuration data for the output and input length).

Connections

This interface is used to connect S-Panel PC to remote equipment, via a cable. The connector is a D-Sub 9-pin plug connector.

If you use a long PLC cable to connect to the S-Panel PC, the cable can be at an electrical potential that is different from the electrical potential of the panel, even if both are connected to ground.

The table shows the D-Sub 9-pin assignments:

Pin	Assignment	Description	D-Sub 9-pin plug female connector
1	–	–	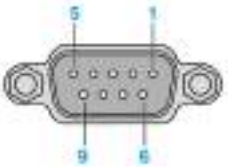
2	–	–	
3	RxD/TxD-P	Receive/Send Data-P connection B plug	
4	–	–	
5	GND	Reference potential	
6	VP	Positive supply voltage	
7	–	–	
8	RxD/TxD-N	Receive/Send Data-N connection A plug	
9	–	–	

Any excessive weight or stress on communication cables may disconnect the equipment.

⚠ CAUTION

LOSS OF POWER

- Ensure that communication connections do not place excessive stress on the communication ports of the Harmony Industrial PC.
- Securely attach communication cables to the panel or cabinet.
- Use only D-Sub 9-pin cables with a locking system in good condition.

Failure to follow these instructions can result in injury or equipment damage.

Compatible Table

Part number	Description	S-Panel PC	Enclosed PC
HMIYMINPRO1	Interface Profibus w/NVRAM, 128 Mb + ML	Yes	Not applicable

Cable Routing

S-Panel PC:

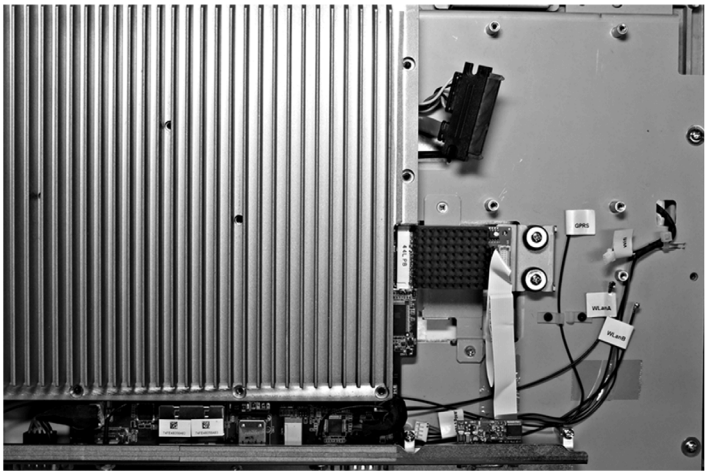

Device Manager and Hardware Installation

Install the driver before you install the interface into the S-Panel PC. The driver installation media is included with the package. After the interface is installed, you can verify whether it is properly installed on your system through the **Device Manager**.

Wireless LAN Interface Card Description

Introduction

There are two types of Wireless LAN Module in optional list, with **Mini PCIe** interface.

Part number	Characteristics
HMIYMINWIFI1	Wireless LAN, **Mini PCIe** (Half-size), MHF2
HMIYMINWIFI2	Wireless LAN, **Mini PCIe** (Full-size), MHF4

The HMIYMINWIFI1 is categorized as a local area wireless for USB-equipped wireless embedded systems. It does not use the **Mini PCIe** slot (Intel dual band wireless-AC 3160). Wireless LAN direct support to connect wireless LAN devices to each other with no need for a wireless access point.

The figure shows the wireless LAN interface card:

The HMIYMINWIFI2 is the IEEE 802.11ac/a/b/g/n 2 x 2 MIMO WLAN and Bluetooth. HMIYMINWIFI2 module adopts QCA6174A single chip solution. The module design is based on the QCA6174A solution.

HMIYMINWIFI2 is a highly integrated wireless local area network (WLAN) solution to let users enjoy the digital content through the latest wireless technology without using the extra cables and cords. It combines with Bluetooth 4.1 and provides a complete 2.4 GHz Bluetooth system which is fully compliant to Bluetooth 4.1 and V2.1 that supports EDR of 2 Mbps and 3 Mbps for data and audio communication. It enables a high performance, cost effective, low power, and compact solution.

Compliance with the IEEE 802.11ac/a/b/g/n standard, the HMIYMINWIFI2 uses Direct Sequence Spread Spectrum (DSSS), Orthogonal Frequency Division Multiplexing (OFDM), DBPSK, DQPSK, CCK and QAM baseband modulation technologies. A high level of integration and full implementation of the power management functions specified in the IEEE 802.11 standard minimize the system power requirements by using HMIYMINWIFI2.

The figure shows the wireless LAN interface card:

Wireless LAN Interface Card Description

The table shows technical data for the wireless LAN interface card:

Model Number	HMIYMINWIFI1	HMIYMINWIFI2
Main unit	Intel AC3160	Qualcom QCA6174A
Unit board size	Mini PCIe Half-size	Mini PCIe Full-size
Standard conformance	802.11 ac + Bluetooth 4.0	802.11 ac/a/b/g/n + Bluetooth 4.1
Operating temperature	0 °C to 80 °C	-20 °C to 65 °C Extended operating temperature: -20 °C to 85 °C (There will be 30~50 Mbps reduced throughput at some data rate at 85 °C)
Tx/Rx stream	1 x 1	2 x 2
Wireless band	2.4 GHz, 5 GHz	2.4 GHz, 5 GHz
Peak speed	433 Mbps	867 Mbps
MU-MIMO*	No	Yes
Connector for Antenna cable	MHF2	MHF4
Certification	FCC, RED, TELEC, RCM	FCC, RED, RCM, IC, CE, CMIIT, NCC, Mexico, ANATEL, IDA, TELEC ….WW

Model Number	HMIYMINWIFI1	HMIYMINWIFI2
Content of this product	1. Wireless LAN Board (**Mini PCIe** Half-size Board) 2. Wiring set (MHF2 connector): ❍ 2 Wiring cables (MHF2 connector) ❍ I/F attachment ring (3 parts x 2 pieces) ❍ I/F mounting plate 3. 2 Antennas 4. Screws (2 pieces) 5. Installation guide 6. Mounting spacer plate to Box PC mini PCIe half-size to full-size	1. Wireless LAN Board (**Mini PCIe** Full-size Board): ❍ 2 Wiring cables (MHF4 connector) ❍ I/F attachment ring (3 parts x 2 pieces) ❍ I/F mounting plate 2. Wiring set (MHF4 connector) 3. 2 Antennas 4. Screws (2 pieces) 5. Installation guide
Supported OS	Windows® 10 (32, 64 bit) Windows® 8.1 (32, 64 bit) Windows® 7 (32, 64 bit) Windows® Embedded Standard 7 (32, 64 bit)	Windows® 10 (32, 64 bit) Window®s 8.1 (32, 64 bit) Windows® 7 (32, 64 bit) Windows® Embedded Standard 7 (32, 64 bit)
Connectable iPC	*See the compatibility table below.	*See the compatibility table below.

Wireless LAN Interface Cable Description

The table shows technical data for the wireless LAN interface cable and antenna:

Part number	Characteristics
HMIYCABWIFIAN51	Remote wireless LAN antenna cable 5 m (16.4 ft)

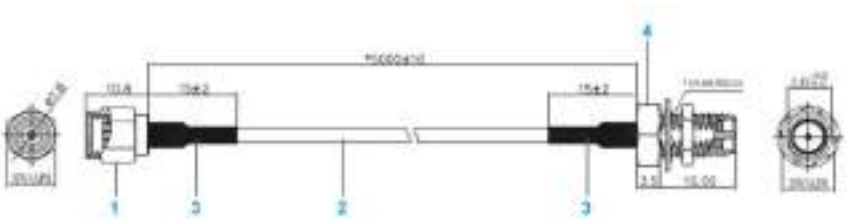

NOTE: The antennas are mounted directly on the product to the specific location. They can also be mounted remotely using intermediate cables. The figure shows the dimensions of the remote wireless LAN antenna cable.

Compatibility Table and Cable Routing

With pre-install antenna cables to WLan A and WLan B SMA connector:

HMIYMINWIFI1

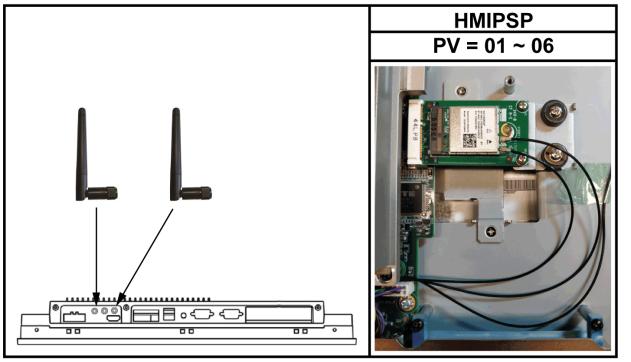

HMIYMINWIFI2

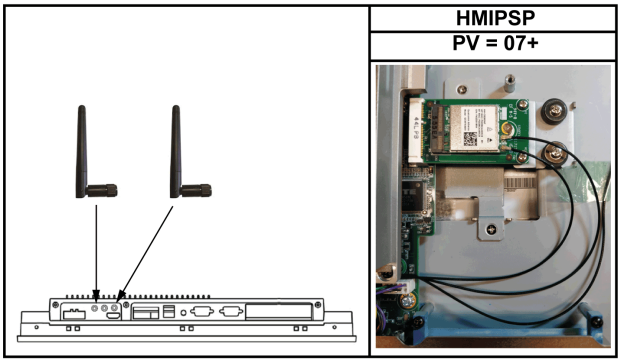

With optional interface slot:

HMIYMINWIFI1 / HMIYMINWIFI2

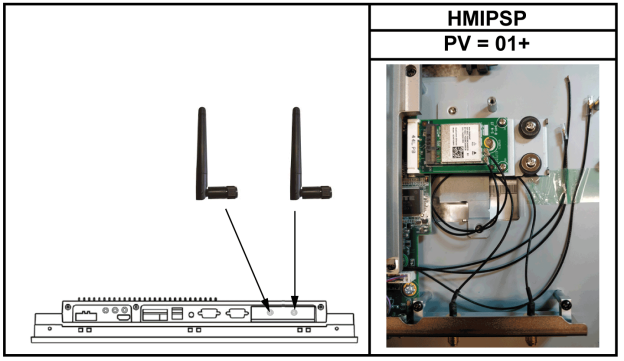

Device Manager and Hardware Installation

Install the driver before you install the interface into the Box iPC. The driver installation media is included with the package. After the interface is installed, you can verify whether it is properly installed on your system through the **Device Manager**.

USB Interface Description

Introduction

The HMIYMINUSB1 are categorized as communication modules. It is all compatible with the mini PCIe card.

The figure shows the USB interface:

The figure shows the dimensions of the USB interface:

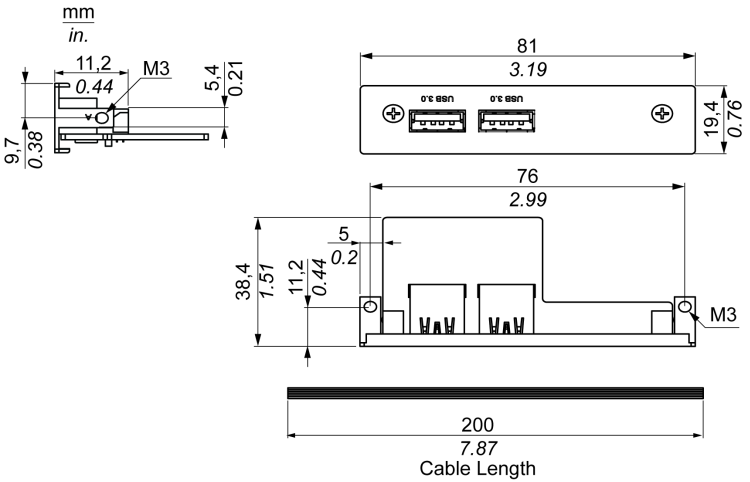

USB Interface

The table shows technical data for the USB interface:

Element	Characteristics
General	
Bus type	Mini PCIe card revision 1.2
Connector	2 x ports USB 3.0
Power consumption	+5 Vdc / 900 mA power output to USB device (typical: 3.3 Vdc)
Communication	
Protocol	Universal serial Bus 3.0 specification Rev. 1.0
Speed	Low speed: 1.5 Mb/s, full speed: 12 Mb/s, high speed: 480 Mb/s, s uper speed: 5 Gb/s

Compatible Table

Part number	Description	S-Panel PC	Enclosed PC
HMIYMINUSB1	Interface USB 3.0, 2 x USB	Yes	Not applicable

Cable Routing

S-Panel PC:

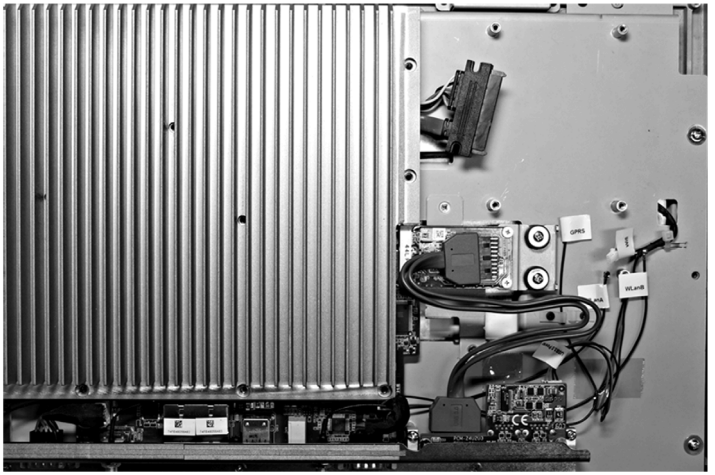

Device Manager and Hardware Installation

Install the driver before you install the interface into the S-Panel PC. The driver installation media is included with the package. After the interface is installed, you can verify whether it is properly installed on your system through the **Device Manager**.

NVRAM Card Description

Introduction

The HMIYMINNVRAM1 is categorized as industrial storage or a memory card for the mini PCIe slot.

The figure shows the NVRAM card:

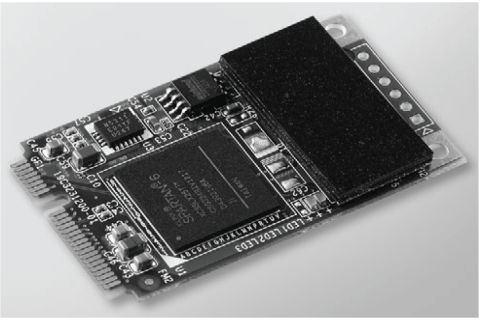

NVRAM Card Description

The table shows the technical data of the NVRAM card:

Features	Values
General	
Bus type	mini PCIe card revision 1.2
Power consumption	3.3 Vdc at 150 mA
Memory	
Size	2 MB
Read/write speed	6 Mb/s
Maximum magnetic field immunity during writing	8000 A/m
Maximum magnetic field immunity during read or standby	8000 A/m

Compatible Table

Part number	Description	S-Panel PC	Enclosed PC
HMIYMINNVRAM1	NVRAM memory card	Yes	Not applicable

Device Manager and Hardware Installation

Install the optional interface into the S-Panel PC first, then install the driver. The driver installation media is included in the recovery media (USB key). After the interface module is installed, you can verify whether it is properly installed on your system through the **Device Manager**.

GPRS Interface Description

Introduction

The HMIYMINGPRS1 is categorized as a GPRS (general packet radio service). It provides a cost effective solution for wireless remote connection to distributed installations over the Internet. It is compatible with the mini PCIe card with SIM card holder.

GPRS is a packet-oriented data service based on GSM (global system for mobile). It offers the advantages to pay only for the total volume of data exchanged (in MB per month) regardless of the connection time while data communication via traditional circuit switching (PSTN/GSM) is charged per minute of connection time.

GSM connections are used for on-demand services such as sending SMS alarms or basic remote services such as diagnostics.

GPRS is more suitable for permanent access to remote installations providing:
- Easy remote programming.
- Continuous remote monitoring and control.
- Transparent routing capabilities from the Internet to LAN networks or serial network devices connected to the S-Panel PC gateway.

In addition, GPRS provides higher data exchange rates than GSM:

	Upload	Download
Theoretical	24 kbps	48 kbps
Typical	16 kbps	20 kbps

NOTE: These values depend on your service provider, the distance between your GPRS interface and the base station, and the current traffic.

NOTE: If too many browsers are being used on a modem connection (GPRS, PSTN), performance may decrease and lead to difficulties with page refreshing.

The figure shows the GPRS interface:

GPRS Interface Description

The table shows technical data for the GPRS interface:

Features	Values
General	
Bus type	mini PCIe card revision 1.2
Connector	1 x RF antenna coaxial connectors
Power consumption	3.3...3.6 Vdc < 700 mA (HSPA connected mode)
Peak current	1.5 A
Communication	
Protocol	UMTS/HSPA network: 800/850/900/1700/1900/2100 MHzEDGE/ GPRS/ GSM network: 850/ 900/ 1800/ 1900 MHz
Speed	Downlink: 7.2 Mb/s (HSDPA) / uplink: 5.76 Mb/s (HSUPA)
Dimensions (l x w x h)	50.85 x 29.9 x 6.2 mm (2.0 x 1.17 x 0.24 in)

Any excessive weight or stress on communication cables may disconnect the equipment.

⚠ CAUTION

LOSS OF POWER

- Ensure that communication connections do not place excessive stress on the communication ports of the Harmony Industrial PC.
- Securely attach communication cables to the panel or cabinet.
- Use only D-Sub 9-pin cables with a locking system in good condition.

Failure to follow these instructions can result in injury or equipment damage.

Compatible Table

Part number	Description	S-Panel PC	Enclosed PC
HMIYMINGPRS1	Interface 3G, C109, 1 x antenna	Yes	Not applicable

GPRS Remote Access

GPRS communication implies:

- The GPRS interface is connected to the Internet via the GPRS network.
- The remote PC or network is also connected to the Internet.

GPRS topologies can support:

- NAT (network address translation) routing tables for transparent routing to Ethernet devices
- security services such as IP address control or VPN tunnels for secured data exchange over the Internet

The following figure shows remote access to the network of the GPRS interface:

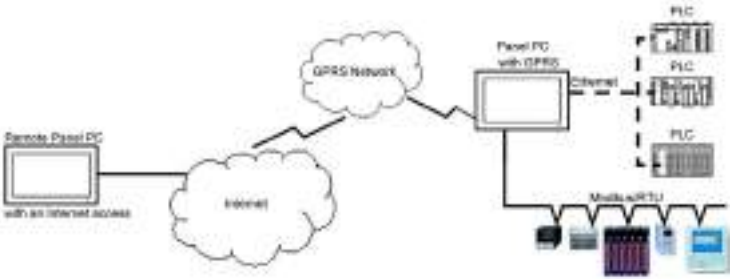

Connection Principles

GPRS communication requires a SIM card and a specific GPRS contract with a service provider.

The GPRS connection is always initiated from the interface to the GPRS network.

It is not possible for a client application to open a connection by directly dialing the GPRS interface. Nevertheless, the GPRS interface provides various solutions to connect to the GPRS network:

Permanent mode:

- Automatic connection at startup, restart or after connection loss.

On-demand mode:

- Callback function: opens the connection upon receiving an incoming GSM or PSTN call.
- Autonomously on a process or application condition.

The GPRS interface connects the APN (*access point name*) of the service provider and receives an IP address back that can be static or dynamic.

The GPRS interface supports both static and dynamic IP addresses. If the address is dynamic, it is necessary to inform the remote application of the new IP address.

NOTE:

- GPRS uses the DNS server of the service provider; it replaces the DNS server configured in the S-Panel PC.
- The default gateway set in the Ethernet configuration of the S-Panel PC is not used with a GPRS connection. The default route of the GPRS connection is used instead. Thus, it is not possible to route through Ethernet when the interface is connected to the GPRS network.

GPRS Contracts

GPRS service providers offer dedicated services adapted to industrial applications, also called M2M (*machine to machine*).

Service providers offer GPRS contracts with different options. The main options are:

- Public or private IP address: Choose a contract that gives you a public IP address to be accessible directly from the Internet.
- Static or dynamic IP address.
- Incoming TCP ports blocked or not: Some providers offer only subscriptions with TCP ports blocked for security reasons. For example, some provider block ports that are lower than 1024.

NOTE:

- For ease of use and configuration, you should choose a contract that does not block TCP ports and provides a static IP address.
- If your service provider blocks the public ports (< 1024), you must use a VPN and choose a contract that authorizes VPN traffic.

Cable Routing

S-Panel PC:

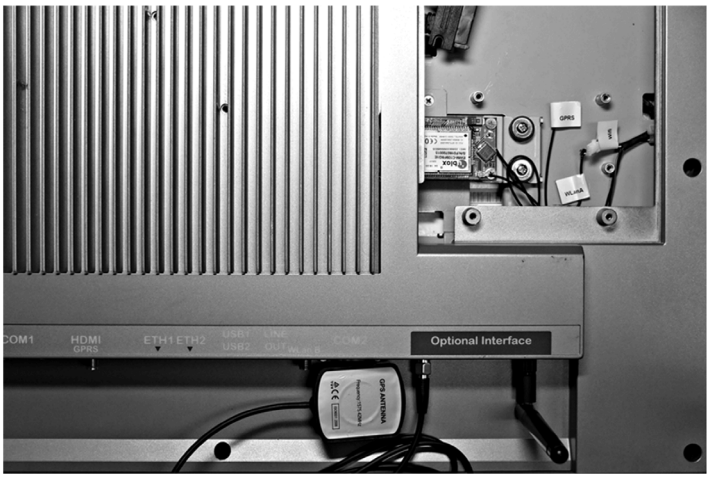

Device Manager and Hardware Installation

Install the driver before you install the interface into the S-Panel PC. The driver installation media is included with the package. After the interface is installed, you can verify whether it is properly installed on your system through the Device Manager.

VGA and DVI Interface Description

Introduction

The HMIYMINVGADVID1 (interface 2 x VGA) is categorized as industrial module. It is compatible with the mini PCIe card. The Video Graphic card supports Full HD 1920 x 1080 definition and dual display mode. Two different screen images can be displayed on the two VGA ports (DVI-D is clone image of the first VGA).

The HMIYMINVGADVID1 (interface 1 x DVI-D) is categorized as industrial module. It is compatible with the mini PCIe card. The DVI-D connector requires one external interface slot.

The HMIYMINDVII1 (interface 1 x DVI-I) is categorized as industrial module. It is compatible with the mini PCIe card. The DVI-I connector requires one external interface slot. Both digital and analog signals are provided in the DVI-I connector to connect two displays with same images, thanks to a Y cable (cable with 3 connectors), converting the DVI-I connector to one DVI-D and one VGA connector.

Compatible Table

Part number	Description	S-Panel PC	Enclosed PC
HMIYMINVGADVID1	Interface 1 x DVI-D, 2 x VGA	Yes(1)	Not applicable
HMIYMINDVII1	Interface 1 x DVI-I	Yes	
(1) Only support one Interface bracket; either with 2 x VGA or DVI-D bracket.			

Cable Routing

S-Panel PC and HMIYMINVGADVID1 (with 2 x VGA):

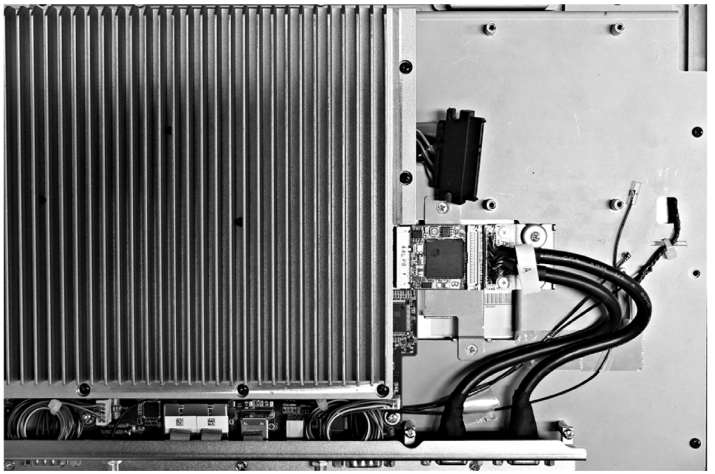

S-Panel PC and HMIYMINVGADVID1 (with 1 x DVI-D):

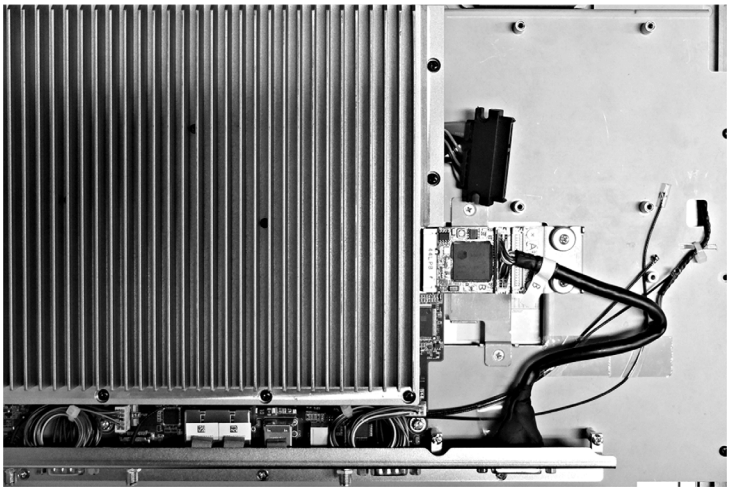

S-Panel PC and HMIYMINDVII1:

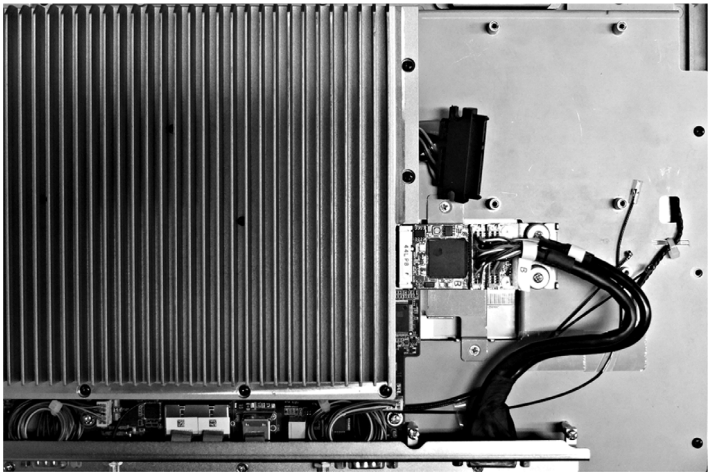

Interface Installation

Before installing or removing a mini PCIe card, shut down Windows operating system in an orderly fashion and remove the power from the device.

NOTICE
ELECTROSTATIC DISCHARGE Take the necessary protective measures against electrostatic discharge before attempting to remove the Harmony Industrial PC cover. **Failure to follow these instructions can result in equipment damage.**

⚠ CAUTION
OVERTORQUE AND LOOSE HARDWARE ● Do not exert more than 0.5 Nm (4.5 lb-in) of torque when tightening the installation fastener, enclosure, accessory, or terminal block screws. Tightening the screws with excessive force can damage the installation fastener. ● When fastening or removing screws, ensure that they do not fall inside the Harmony Industrial PC chassis. **Failure to follow these instructions can result in injury or equipment damage.**

NOTE: Remove the power before attempting this procedure.

The table describes how to install a VGA and DVI interface:

Step	Action
1	Release motherboard screw: 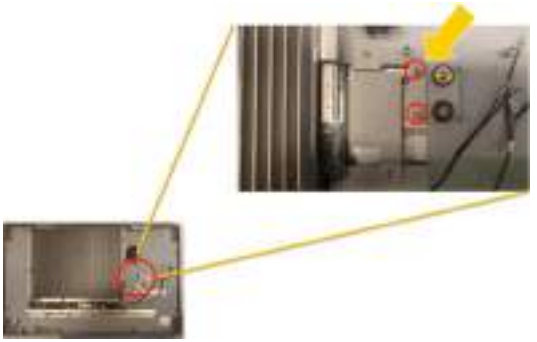
2	Install mini PCIe card: 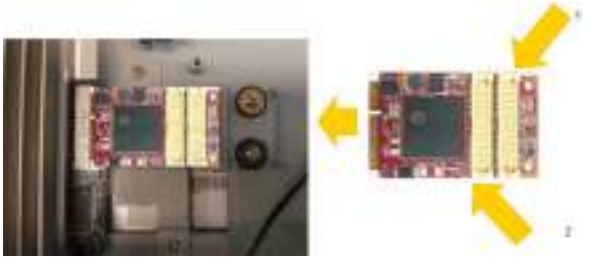
3	Tear down optional interface bracket: 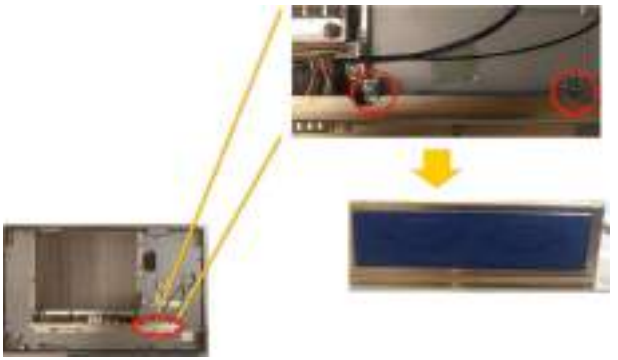

Step	Action
4	2 x VGA interface:

Step	Action
Continued	DVI-I interface: DVI-D interface:

Step	Action
5	Install 2 x VGA interface bracket and connect the cable (analog signal): 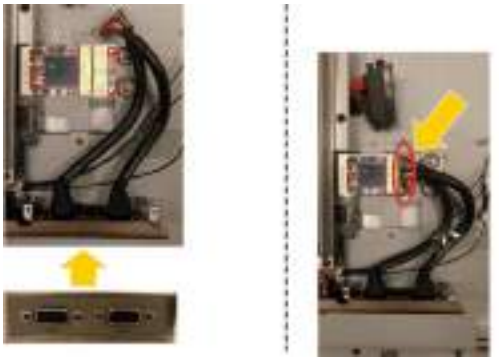 Install DVI-D interface bracket and connect the cable (analog signal): 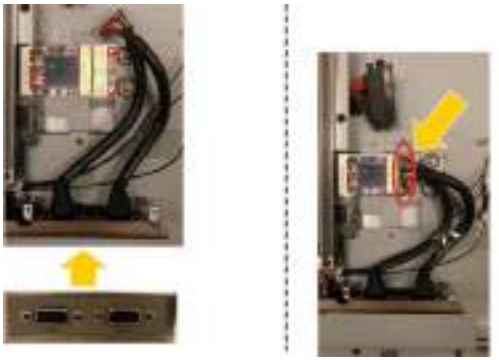 Install DVI-I interface bracket and connect the cable (analog signal): 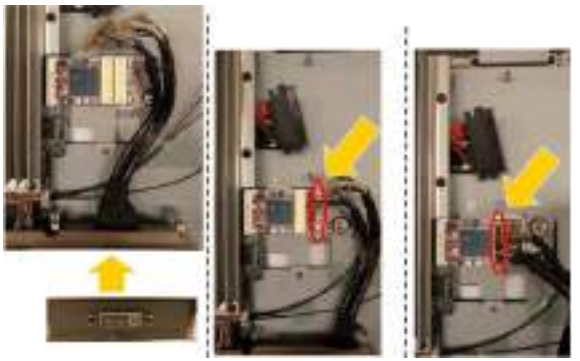

Graphic Setting

For each Display PC, a software tool is available to enable/disable touch-panel operation. You can disable up to three touch panels to monopolize the touch operation, the Display PC order must match the tool. The exclusive **Touch** function is set to be effective for 100 ms even after a finger leaves the Display PC.

Check that the BIOS Graphic of the S-Panel PC is set to {IGFX}, as follows:

1. **BIOS → Chipset → System Agent (SA) Configuration**
2. **Graphics configuration**
3. **Primary Display → IGFX**
4. **Save** and exit BIOS

4G (mini PCIe) Interface Description

Introduction

The HMIYMIN4GEU1 and HMIYMIN4GUS1 are categorized as industrial communication modules.

The HMIYMIN4GEU1 is mini PCIe GPRS 4G for Europe and Asia frequencies.The kit including SIM card holder and external antennas.

The HMIYMIN4GUS1 is mini PCIe GPRS 4G for North America frequencies.The kit including SIM card holder and external antennas.

This figure shows the interface mini PCIe GPRS 4G:

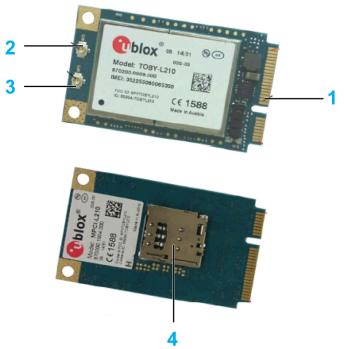

1 mini PCIe connector
2 RF main antenna connector (use this for connection to the S-Panel PC)
3 RF diversity antenna connector
4 SIM holder

Description

The table shows technical data:

Features	Values
General	
Bus type	SIM card
Power consumption	3.3 Vdc x 2.6 A
Optional temperature	0...45 °C (113 °F)

Compatible Table

Part number	Description	S-Panel PC	Enclosed PC
HMIYMIN4GUS1	Interface 4G US,1 x antenna	Yes	Not applicable
HMIYMIN4GEU1	Interface 4G EU/Asia,1 x antenna	Yes	

Cable Routing

S-Panel PC and HMIYMIN4GUS1:

S-Panel PC and HMIYMIN4GEU1:

Interface Installation

Before installing or removing a mini PCIe card, shut down Windows operating system in an orderly fashion and remove the power from the device.

NOTICE
ELECTROSTATIC DISCHARGE Take the necessary protective measures against electrostatic discharge before attempting to remove the Harmony Industrial PC cover. **Failure to follow these instructions can result in equipment damage.**

⚠ CAUTION
OVERTORQUE AND LOOSE HARDWARE ● Do not exert more than 0.5 Nm (4.5 lb-in) of torque when tightening the installation fastener, enclosure, accessory, or terminal block screws. Tightening the screws with excessive force can damage the installation fastener. ● When fastening or removing screws, ensure that they do not fall inside the Harmony Industrial PC chassis. **Failure to follow these instructions can result in injury or equipment damage.**

NOTE: Remove the power before attempting this procedure.

The table describes how to install an 4G interface:

Step	Action
1	Release mother screw:
2	Install 4G mini PCIe card:
3	Put ring into SMA cable:

Step	Action
4	Put SMA cable into bracket: 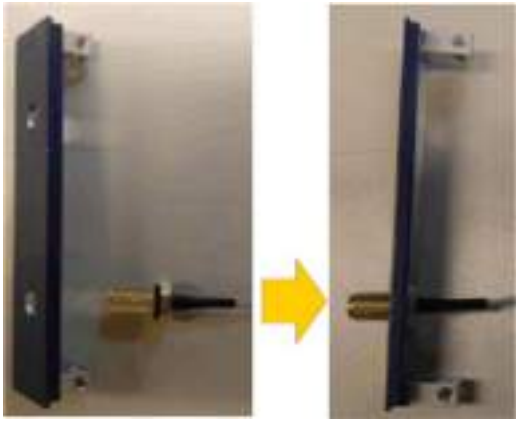
5	Put washer into SMA connector: 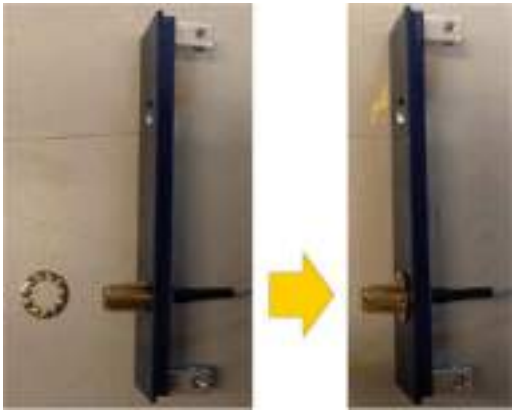

Step	Action
6	Combination nut: 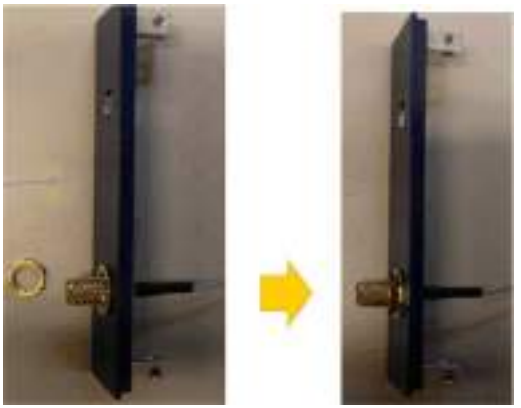
7	Tear down optional interface bracket: 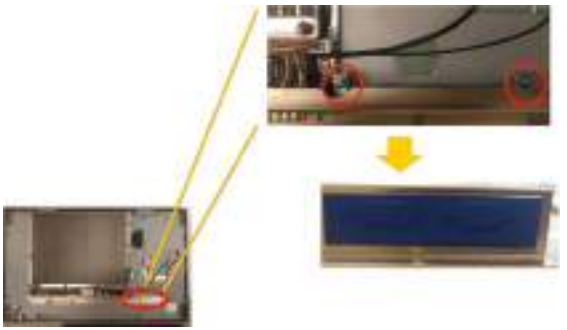

Step	Action
8	Install antenna interface bracket and connect the cable: WLanA/ANT1: supports both Tx and Rx, providing the main antenna interface. **NOTE:** When using a mini PCIe card with an external cable attached, install a clamp or other device to secure the cable.
9	Lock antenna:

Step	Action
10	Connect pre-install SMA cable: **1** WLanB/ANT2:supports Rx only for the LTE MIMO 2 x 2 and 3G Rx diversity configurations. **2** WLanA/ANT1: supports both Tx and Rx, providing the main antenna interface.

Device Manager and Hardware Installation

Install the driver before you install the interface into the S-Panel PC. The driver installation media is included with the USB key of the S-Panel PC. After the interface is installed, you can verify whether it is properly installed on your system through the **Device Manager**.

Chapter 9
System Monitor

Subject of this Chapter

This chapter describes the system monitor features of the Panel PC controller.

What Is in This Chapter?

This chapter contains the following topics:

Topic	Page
System Monitor Interface	178
Device Management - Monitoring Rules	184
Monitor Account Setting	204
Monitor System Setting	207

System Monitor Interface

Overview

The **System Monitor** 3.0 interface provides remote monitoring, a feature that helps you access multiple clients through a single console for remote device management. The **System Monitor** immediately recognizes equipment and provides real-time equipment maintenance, which improves system stability and reliability.

Remote Monitoring monitors system status of remote devices. The monitored items include hard disk temperature, hard drive health, network connection, CPU temperature, system voltages, system fan status, and UPS status.

Remote Monitoring also provides support for function logs so that managers can regularly check the status of their remote devices.

The **System Monitor** sends notification and makes an entry in the event log.

NOTE: When configuring the **System Monitor**, it is not possible to create a group/device as the virtual keyboard is not accessible from configuration. The workaround consists of plugging in a physical keyboard.

System Monitor Requirements

The table describes the software requirements:

Description	Software
Framework	Microsoft.NET Framework version 3.5 or higher
Driver	Software 4.0 API

System Monitor Console

The **System Monitor** console acts as a server for the clients. Devices that run on the **System Monitor** console display the health and status information from the **System Monitor** clients. The console has to be made available by the clients over a network.

Launch the system tray of **ServerControl** from Windows **Start** → **Programs** and right-click to launch **ServerControl** menu from tray icon:

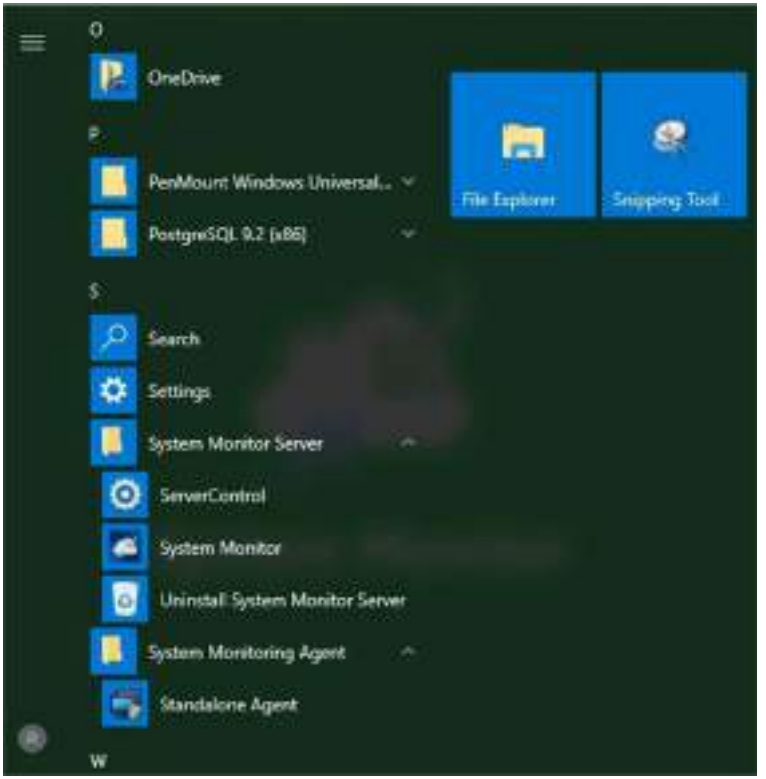

System Monitor Client (Desktop)

This procedure describes the User Login/Logout interface:

Step	Description
1	The **System Monitor** supports mainstream browsers like Chrome, Firefox, Internet Explorer, and Safari. The portal page supports multi-language and auto-detects the language currently used by browsers for default displaying. You can select the language from the menu at top-right corner to change manually: **NOTE:** In the case, you experience difficulties with **Touch**, then: ● In **Chrome** search bar, key in *chrome://flags/#disable-touch-adjustment* ● Replace the status of **Touch adjustment** from disable to enable. ● Click **RELAUNCH NOW** button.
2	**User Log In** ● You can input valid user name, password, and click **Login** to verify and enter main management page (by default the user is `admin` and password `admin`). ● Check **Auto Login** to allow users to cache login information and auto login each time. **NOTE:** ● For security concerns, do not check this option if you are using a public PC. ● If you forget your password, click **Forgot Password**. Put the registered user email in the prompt dialog after it has auto resent the password to your email.
3	Changing Password for First log in: For the first successful login, new user can change their password or bypass it:
4	**User Log Out** Click **User Log Out** from the right corner menu to check out the system.

Remote Manage Devices Any Time, Any Where

System Monitor is a **Console-Server-Agent** web-based structure for cloud management. Agent here refers to S-Panel PC devices, and server refers to the server directly in contact with the agent. The server can be a physical entity located in a central control room, or a virtual host set up in a cloud. Console refers to a web-based interface that connects to the server and communicates with the agent through the server. Administrators can perform equipment status and maintenance checks on **System Monitor** console through an Internet browser at any time, from anywhere, using any connected device. The server-agent connection fit the MQTT communication protocol. This improves connection security and stability, and also decreases development time for **System Monitor** integration. The console-server-agent web-based structure not only lowers the difficulty of setting up **System Monitor** network environments when provisioning, but also provides a distributed connectivity structure that solves the challenges encountered with large-scale or multi-site device management. **System Monitor** is a real-time management platform that breaks geographical limitations. Administrators can manage all of their devices by simply using their PCs, smartphones, and tablets.

NOTE: MQTT (formerly message queue telemetry transport) is a publish-subscribe based messaging protocol for use on top of the TCP/IP protocol.

Click **Management Service** to start/stop main **System Monitor** management service:

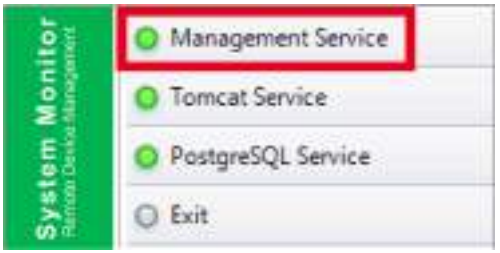

Tomcat Service

Tomcat is an open-source Web server and servlet container. Tomcat implements several Java EE specifications including Java servlet, JavaServer pages (JSP), Java EL, and WebSocket, and provides a Java HTTP Web server environment for Java code to run in.

Click **Tomcat Service** to start/stop **System Monitor** Web service:

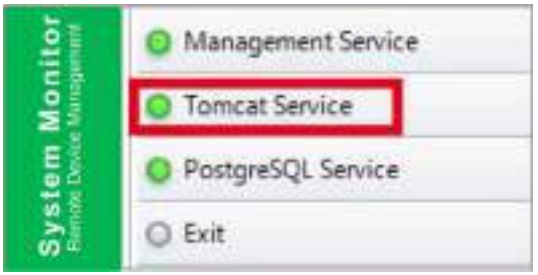

PostgreSQL Service

PostgreSQL is an object-relational database management system (ORDBMS). As a database server, its function is to store data and retrieve it later, as requested by other software applications running on another computer across a network and the Internet. It can handle workloads ranging large internet-facing applications with many concurrent users. PostgreSQL provides replication of the database itself for availability and scalability.

Click **PostgreSQL Service** to start/stop **System Monitor** database service:

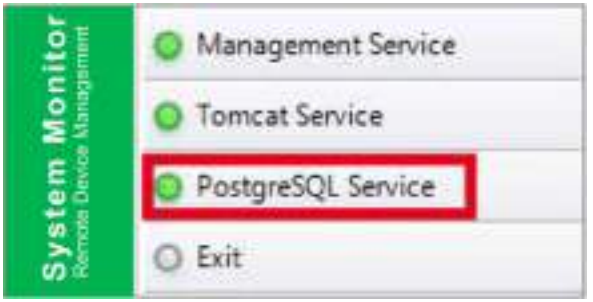

Exit

Click **Exit** to terminate server management console from tray icon and all **System Monitor** services that are still running in the background. You can restart console from Windows/Programs menu:

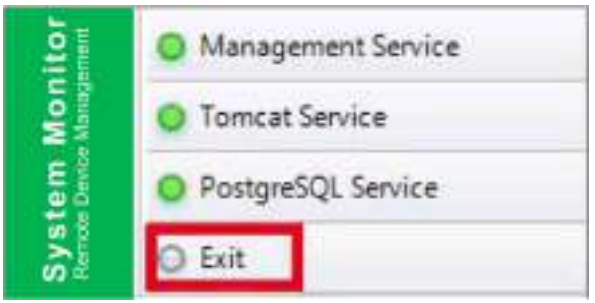

Power Management

Select the action from drop-down menu of each device/group list item to power off, reboot and hibernate device.

Seamless HW/SW Monitoring for Complete Protection

In order to ensure device stability, **System Monitor** actively monitors device temperatures, voltages, and the states of hard disks and other hardware. In addition to hardware monitoring functions, **System Monitor** has a software monitoring function to oversee program status. Active alerts are sent out if any abnormalities are observed, and **System Monitor** can execute related actions according to user settings, like stopping or restarting processes, which further ensure normal device operation. **System Monitor** provides a comprehensive, seamless, device monitor and control system that includes both hardware and software.

KVM Feature

The **System Monitor** features a remote KVM (keyboard, video, and mouse) and allow remote diagnosis and recovery in any situation. The time saving on trouble shooting with real-time remote monitoring and proactive alarm notifications ensure continued system health.

User-Friendly Map-View Interface

Taking advantage of web-based features, **System Monitor** provides map-view interface and leverages Google and Baidu maps to help administrators locate and manage their devices more easily. In addition to the maps, **System Monitor** also provides for building diagrams to help pinpoint device locations in offices, factories, or wherever. **System Monitor** provides a user-friendly interface in an overall easy-to-use environment.

NOTE: Baidu maps is a Chinese online mapping service.

Device Management - Monitoring Rules

Device Management

This procedure describes how to use the **Device Management** user interface:

Step	Description
1	**Device management** ● After user login, **Device** is the default page. ● **Device** management page is composed of a system hierarchy tree (left-side) and device list (right-side). ● **Device** management provides three levels of management view: **Device List**, **Group List**, and **Map View.** ● System hierarchy tree includes server, account, and group node for device/group list mode as well as location, layout, and device node for map view mode. Each node supports corresponding operations (add/delete/edit) according to node attributes. 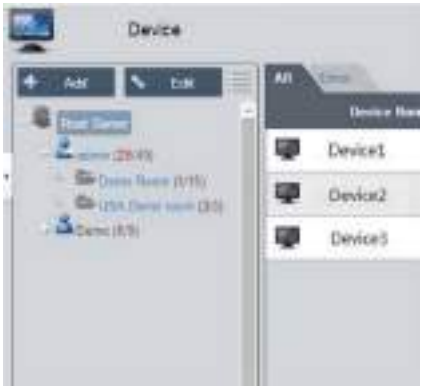
2	View mode – Device status list: 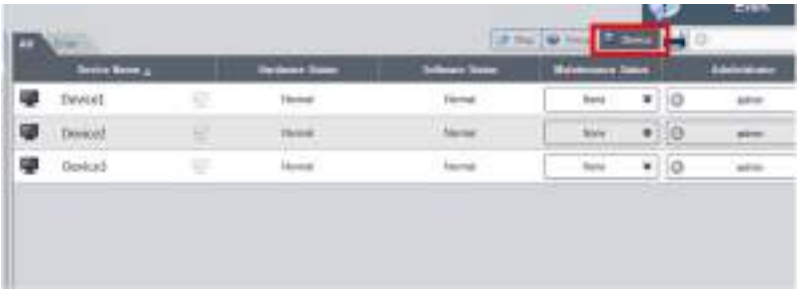

Step	Description
3	**Add/Delete/Edit device server** Add device server: Select on one of server nodes and click **Add** to the pop-up menu option: Click **Add Server** to pop up the **Device Server** dialog for new subserver registering. **Delete device server:** Click **Edit** to switch to edit mode and click the icon **X** to delete this server node. **Edit device server:** Click **Edit** to switch to edit mode and select one of the server nodes. You can remove and edit this server node.
4	**Add/Delete/Edit device group** Add device group: Select one user account and click **Add** to the pop-up menu option. Click **Add Group** to pop up **Device Group** dialog for new group addition:

Step	Description
5	**Delete /Edit device group** Delete /Edit device group: Click **Edit** to switch to edit mode and select one of the group nodes. You can remove and edit this group node:
6	**Add/Delete/Edit device** Add device: Select one of the user accounts or groups and click **Add** to the pop-up menu option. Click **Add Device** to the pop-up dialog for new device addition:

Step	Description
7	**Manual add** Click **Add Device** to pop up the **Add Device** dialog to add a device manually. You can input known device ID or MAC addresses that have already registered to the server and assign a current account or group. If the device does not exist, you can also add a device directly:
8	**Search device** Click **Search Device** to pop up the **Device** dialog for advanced device smart search. The system auto-discovers both connected and unassigned devices located at the same local area network as the client user:

Step	Description
9	**Delete device** Click **Edit** to switch to edit mode. You can remove and edit devices on the device list in this mode. Click the **X** icon for the selected device row and confirm the device warning removal:
10	**Edit device** Click **Edit** to switch to edit mode. You can remove and edit devices of the device list in this mode. Click selected device name to pop up the **Device** dialog for editing:

KVM Viewer

Step	Description
1	**Remote control – KVM viewer** When a device has been connected, the remote control icon shows on the right side of the device name. Click the icon for advanced controls including KVM (Keyboard Video Mouse) viewer, terminal, and screen shot:
2	**KVM viewer** Click the icon from the remote control menu to connect to the device for KVM control: 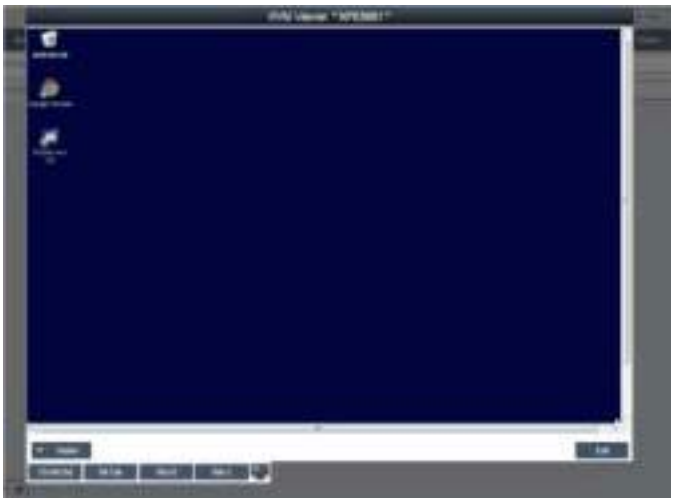 **NOTE:** you can select KVM connection method on the device agent side. System default is System Monitoring KVM (Ultra VNC), you can select other already-installed VNC, or disable this function for security concerns.

Remote Control and Monitoring

Step	Description
1	**Remote control – Terminal** Click the icon from the remote control menu to connect to the device for terminal command-line control:
2	**Remote control – Screen shot** Click the icon from the remote control menu to snapshot the desktop screen of the remote device and save it on the local client side:

Step	Description
3	**Hardware monitoring status** Real-time monitoring chart: Click the field **Hardware Status** of the device list item to display graphically hardware real-time parameters (memory, CPU usage, temperature, and HDD health status). Click the parameter name to disable/enable displaying of the parameter curve: 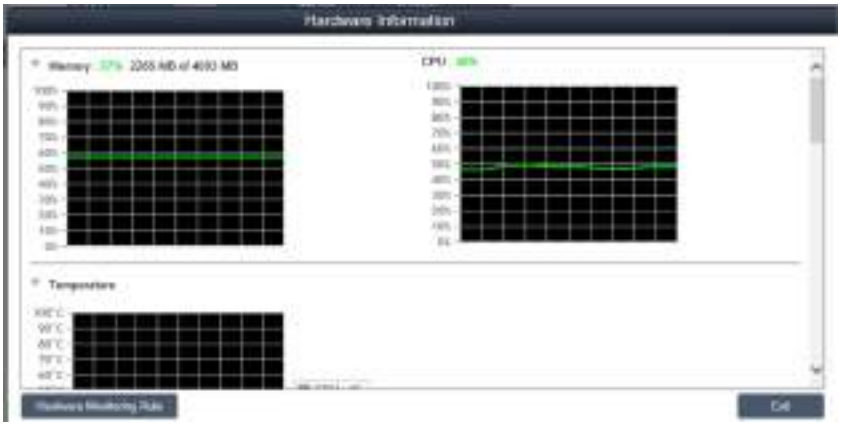
4	**Hardware monitoring fan status** If the fan kit is not installed or the fan rpm is 0 a message will notify: `fan kit not installed or defective`. To get notification about status of the system fan you need to set the appropriate rules, see step Hardware monitoring rules: 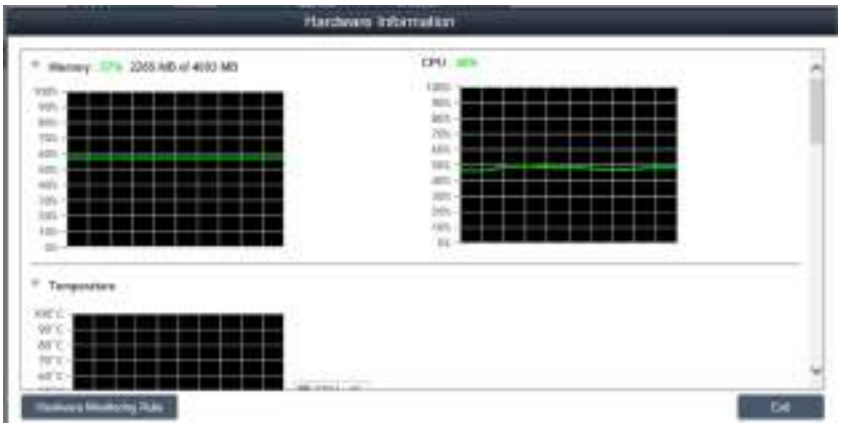

Step	Description
5	**Hardware monitoring UPS health status** If the UPS kit is t installed a message will notify the health status of the battery: `fHealth status of the battery : Battery OK : Green color`. To get notification about status of the system fan you need to set the appropriate rules, see next step:
6	**Hardware monitoring rules** Click the button **Hardware Monitoring Rule** to pop up the hardware monitoring dialog. The dialog lists current monitoring rules for hardware parameters includes CPU, voltage, HDD, and so on:

Step	Description
7	**Add rules** Click the button **Add Rules** button to add a new rule for hardware monitoring. You can select the type of monitoring hardware from the menu, input threshold values for the corresponding parameter, the last time in seconds for reaching that threshold and a notice interval for 2 contiguous events. Before clicking **OK**, you can check the option **Enable Monitor Rule** to enable/disable this new rule:
8	**Edit rules** Click a row in the **Hardware Monitoring Rule** box to pop up the **Hardware Monitoring Setting** dialog box: **Delete rules:** Click the **X** icon on the left side of the schedule item to delete the schedule. **Enable/Disable schedule:** Check the enable check box in the schedule row to enable/disable the schedule.

Step	Description
9	**Software monitoring status** Real-time process list: Click the **Software Status** field in the device list to display the status list for active real-time software (name, status, CPU usage, and memory): 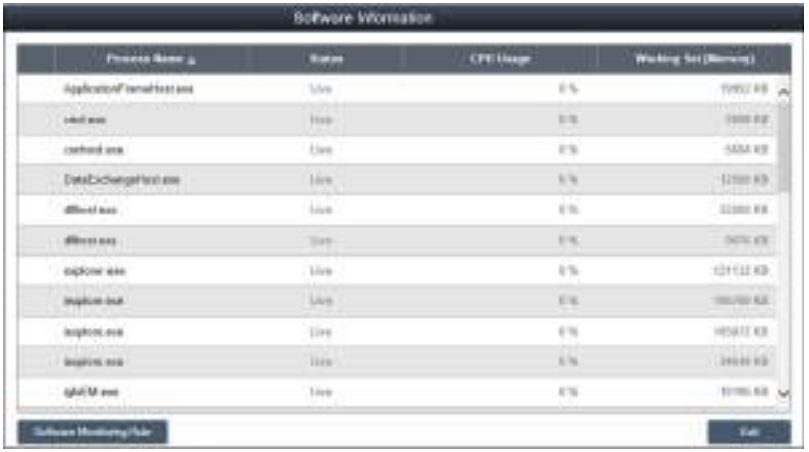 Click the process name to pop up the confirm dialog for killing a specified process, after confirming, you can kill and force the process to terminate: 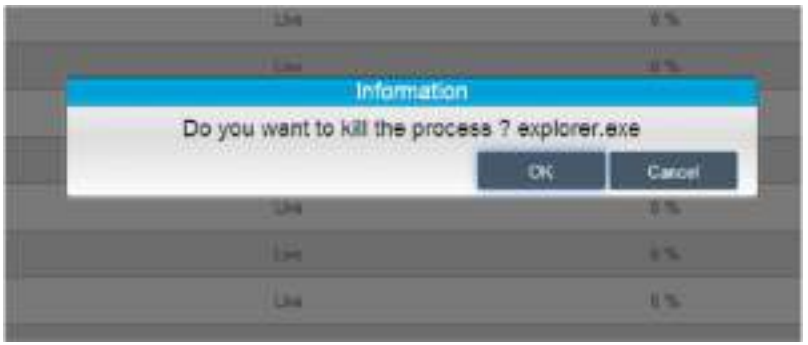

Step	Description
10	**Software monitoring rules** Click the button **Software Monitoring Rules** to pop up the dialog for set software monitoring rule. The dialog lists current monitoring rules for software processes:
11	**Add rules** Click the button **Add Rules** to add a new rule for software monitoring. You can input the process name that they want to monitor, the threshold values of the CPU and memory, the last time in seconds for reaching the threshold, and the notice interval for 2 contiguous events and corresponding action. Before clicking the **OK** button to add the rule, you can check the option **Enable Monitor Rule** to enable/disable this new added rule: **NOTE:** The software monitoring can only monitor and execute actions for the user process.

Step	Description
12	**Edit rules** Click one of the fields to pop up the **Software Monitoring Setting** dialog for editing: **Delete rules:** Click the icon **X** on the left side of the schedule item to delete the schedule. **Enable/Disable schedule:** Check the enable check box in the schedule row to enable/disable the schedule.

Maintenance Status

Step	Description
1	**Maintenance status** You can modify the maintenance status (none / to be maintained / maintaining / finished) from the menu for each device: 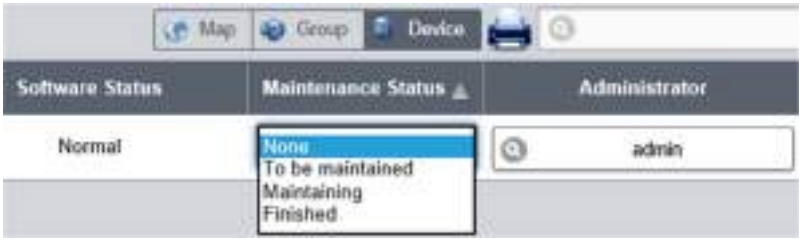
2	**Devices administrator** Users with device management permissions can click the **Admin** field to pop up the selection dialog for administrator to reassign device administrator status to another account:

Step	Description
3	**View mode - Group status list** Click the **Group** tab to list groups under the selected account or group node. The group list shows all group names, group hardware status, and group software status: Group hardware status: This field shows the number of all registered devices and incorrect hardware devices under this group. Group software status: This field shows the number of all registered devices and incorrect software devices under this group.

NOTE: Use Chrome as default browser for System Monitor.
In the case, you experience difficulties to **Add Devices** with **Touch**, then:

- In **Chrome** search bar, key in *chrome://flags/#disable-touch-adjustment*
- Replace the status of **Touch adjustment** from disable to enable.
- Click **RELAUNCH NOW** button.

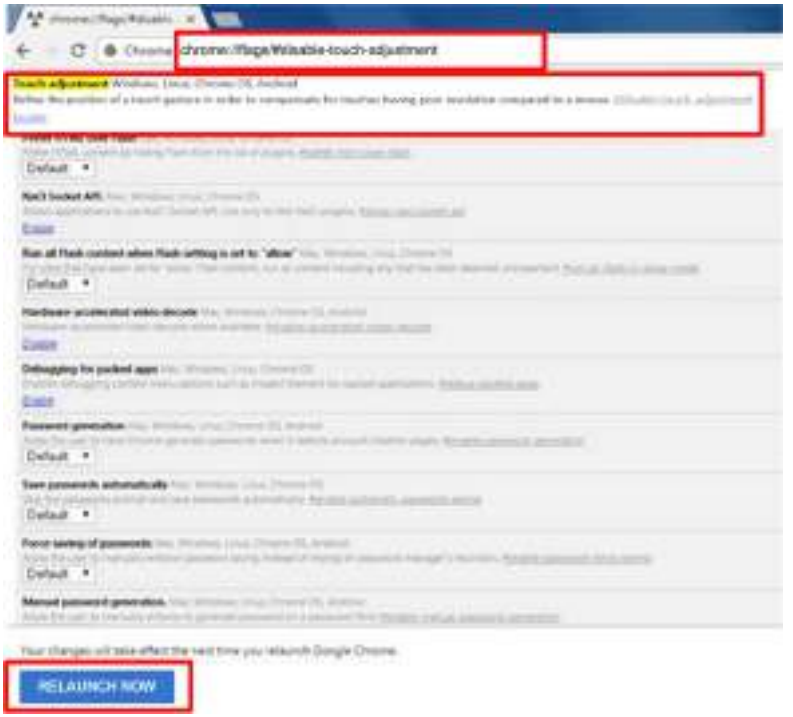

Group Hardware and Software Monitoring Rules

Step	Description
1	Group hardware monitoring rules Click the icon on the right to pop up the dialog **Set Hardware Monitoring Rule**. The dialog lists current monitoring rules and parameters of each group's devices including CPU, voltage, HDD, and so on. **Add group rules:** Click the **Add Rule** button to add a new rule for hardware monitoring. You can select the type of monitoring hardware from the menu, input threshold values of corresponding parameter, last time in seconds of reaching the threshold, and notice interval for 2 contiguous events. Before clicking **OK** to add the rule, you can check the option **Enable Monitor Rule** to enable/disable this new rule. **Edit group rules:** Click the rule field to pop up the **Hardware Monitoring Setting** dialog for editing. **Delete rules:** Click the **X** icon on the left side of the scheduled item row to delete the schedule. Enable/Disable schedule. Click the enable check box in the row item to enable/disable the schedule.
2	Group software monitoring rules Click the icon in the field of group hardware status to pop up the **Set Software Monitoring Rule** dialog box. The dialog lists current monitoring rules for software processes of group devices. **Add group rules:** Click the button **Add Rule** to add a new rule for software monitoring. You can input the process name that wants to monitor, the threshold values of CPU and memory, the last time of reaching threshold, notice interval of 2 contiguous events and corresponding action when the monitoring rule is applied. Before clicking the button **OK** to add rule, you can check the option **Enable Monitor Rule** to enable/disable this new added rule. **Edit group rules:** Click the rule field to pop up the **Software Monitoring Setting** dialog for editing. **Delete rules:** Click the **X** icon on the left side of the scheduled item row to delete the schedule. **Enable/Disable schedule:** Click the enable check box in the row item to enable/disable the schedule

View Mode

Step	Description
1	**View mode - Device map view** **Device Map View** visualizes each physical device's location, separate user interface as left-side map hierarchy tree includes account, location, layout, and device node and right-side geography view includes online map and static image map. Different tree node support corresponding add, delete, and edit operations and intuitive drag device nodes as well:
2	**Add/Delete/Edit map location** **Add location**: Select on one of account nodes and click **Add** button to add a new location: Input location name, address, or coordination (latitude and longitude), upload image for location displaying and click **OK** to add the new location: **NOTE:** Map view supports both Google and Baidu online map. These two maps adopt different coordination-system, you must input correct coordination according to online map selection (you can configure in the system settings). If you do not specify either address field or coordination, system will auto location this new added location at the center of current map view.

Step	Description
3	**Delete location** Click **Edit** button to switch to edit mode, click **X** icon ahead of selected location node to delete this location: **NOTE:** If there are layouts or devices under selected location node, you must remove these nodes first before removing location node.
4	**Edit location** Click **Edit** button to switch to edit mode, click the location node/name to pop up the dialog of **Edit Location** to edit the content: **NOTE:** Under this mode, drag the location icon on the right-side map view to relocate location.

Step	Description
5	**Add layout** Select on one of location nodes and click **Add** button to add a new layout. Input layout name and description, upload image for location displaying and click **OK** to add the new layout: **Delete layout:** Click **Edit** button to switch to edit mode, click **X** icon ahead of selected layout node to delete this layout. NOTE: If there are devices under selected layout node, you must remove these nodes first before removing layout node. **Edit layout:** Click **Edit** button to switch to edit mode, click the location node/name to pop up the dialog of **Edit Location** to edit the content.
6	**Add/Delete/Edit map device** Add device: Select on one of accounts, location, or layout node and click **Add** button to add a new device. Newly added devices are by default located at the center of online or static image map: **Delete device:** Click **Edit** to switch to edit mode and click **X** icon ahead of selected layout node to delete this device. **Edit device:** Click **Edit** button to switch to edit mode, drag the device icon on the right-side map view to relocate device. Under this mode, you can drag the device icon from the right-side map view to left-side account or location or layout node to change pop-up its belonged level.

Event Log

Device event list

Select user account or group to decide event range and select event log type (All/Error/Warning/Information) to browse related device events:

Export CSV

Select device and data/time range to export event log as CSV format to local side:

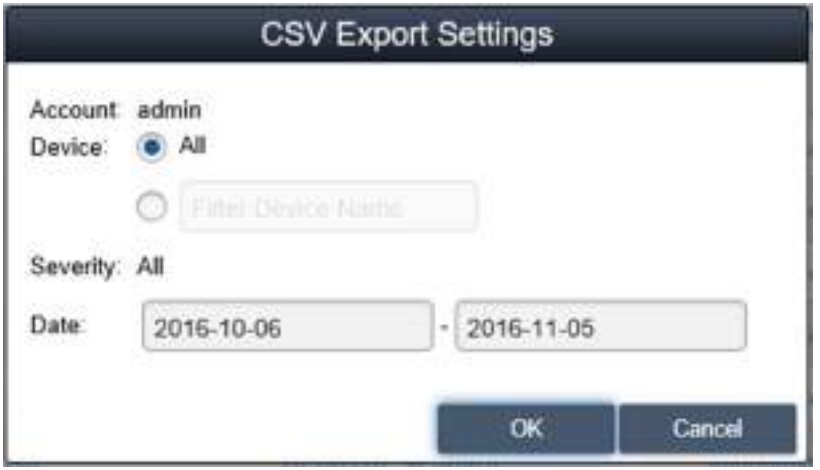

Monitor Account Setting

Account Setting

This procedure describes how to use the **Account Setting** user interface:

Step	Description
1	Click **Account Setting** from menu of upper-right corner to pop up the dialog of account setting for configuring:
2	**Default role** System provides three default roles with pre-defined access rights: **System Administrator**, **Device Administrator**, and **Visitors**: **NOTE:** The user rights of pre-defined role cannot be edited or deleted but only can be browsed.

Step	Description
3	**View/Add/Delete/Edit custom role** In addition to default role, you can add role with user-defined user rights. **Add Role**: Click **Add Role** to pop up the dialog of **Role**. Input role name and corresponding user rights to create a new role: 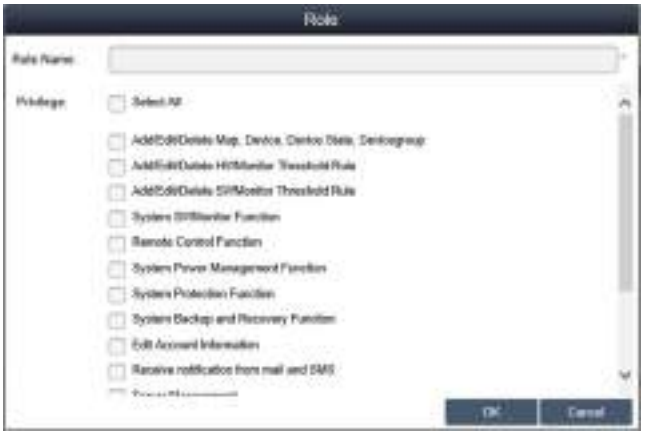 **View/Edit custom role:** Click **Edit** to switch to role edit mode. Click the icon to edit or view role user rights. Click the icon to delete custom role.
4	**View/Add/Delete/Edit account** **View account:** Select one of defaults or custom role and click arbitrary field in the account list to view the details of account:

Step	Description
5	**Add account**: Select one of defaults or custom role and click **Add** button to pop up the dialog for creating a new account: 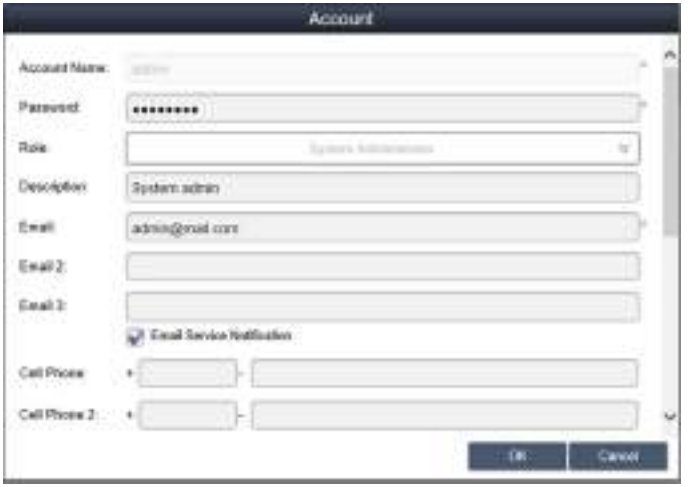 **Edit account**: Click **Edit** button to switch to edit mode. Click arbitrary field in the account list to pop up the dialog for account editing. **Delete account**: Click **Edit** button to switch to edit mode. Click in the account list to delete account. **NOTE: admin** is a super system administrator that cannot be deleted.

Monitor System Setting

System Setting

This procedure describes how to use the **System Setting** user interface:

Step	Description
1	Click **System Setting** from menu of upper-right corner to pop up the dialog of system setting for configuring:
2	**About**: Display server version and local address/port for Web portal:
3	**Email service**: Use SMTP protocol to send notifications via **Email Service**. Before applying setting, click button to send a mail to check validity of settings: **NOTE:** You must enable this email service and check corresponding event notification setting and set up correct email address of device administrator to receive device email notifications while events occur.

Step	Description
4	**Map setting** On-line map supports Google, Baidu. Select map for client default map display:
5	**Notification setting** Click tab **Device/Operation/System** to catalog related notification setting. Set event notify by Email on each item to enable receiving:
6	**Advanced settings** Click **Advanced Settings** for message language of email and SMS, cycle days of system automatically sends inspection report, system warning of low hard disk space and external SYSLOG event server setting:

Event log

Select event log type (all / operation / system) to browse related events:

Export CSV

Select data/time range to export event log as CSV format to local side:

Clearance

Manually or set up automatic period to clean event log:

Upgrade Setting

Use **ValidationCode_Generator.exe** tool to generate MD5 check code of uploading agent upgrade package. Input **Check Code** and select **Upgrade Program** to upload agent upgrade package to server. After uploading, system will auto check all connected agent devices and give hint tag of upgrading on corresponding device list when the user client logs in:

Web SSL Setting

User can switch SSL (Secure Sockets Layer) setting and select the port to open or close SSL:

Chapter 10
User Interface

Touch Screen Calibration

Overview

The touch screen calibration software enables you to calibrate the system parameters.

Accessing the Calibration Touch Screen

This procedure shows how to install the touch screen driver:

Step	Action
1	Launch PenMount control panel tool:

Step	Action
2	Double-click PenMount 6000 USB:
3	Follow the process to calibration touch screen.
4	Click OK to finish calibration:

Chapter 11
Software API

Intelligent Management for Embedded Platform

Description

This **Software API** (Application Programming Interface) is a micro controller that provides embedded features for system integrators. Embedded features have been moved from the OS/BIOS level to the board level to increase reliability and to simplify integration. **Software API** runs whether the operating system is running or not; it can count the boot times and running hours of the device, monitor device health, and provide an advanced watchdog to handle errors found as they happen. **Software API** also comes with a secure and encrypted EEPROM for storing main security keys or other customer defined information. All the embedded functions are configured through an **API** (application programming interface) or by a **DEMO** tool. Schneider Electric provides this suite of **Software API** and the underlying drivers required. Also a set of user-friendly, intelligent, and integrated interfaces speed development, enhance security, and offer add-on value for Schneider Electric platforms.

Chapter 12
Maintenance

Subject of this Chapter

This chapter covers maintenance of the Panel PC controller.

What Is in This Chapter?

This chapter contains the following topics:

Topic	Page
Reinstallation Procedure	216
Regular Cleaning and Maintenance	217

Reinstallation Procedure

Introduction

In certain cases, it may be necessary to reinstall the operating system.

Precautions to take:

- Keep static-producing materials (plastic, upholstery, carpeting) out of the immediate workpace.
- Do not remove ESD-sensitive components from their anti-static bags until you are ready to install them.
- When handling static-sensitive components, wear a properly grounded wrist strap (or equivalent).
- Avoid contact with exposed conductors and component leads.

Before Reinstallation

Hardware required:

- Recovery media, refer to the leaflet of the recovery media.

Setting up the hardware:

- Shut down the operating system in an orderly fashion and remove all power from the device.
- Disconnect all external peripherals.

NOTE: Save all main data onto a hard drive or a memory card. The reinstallation process returns the computer to its factory settings and erases all data.

Reinstallation

Refer to the procedure in the leaflet provided with the recovery media.

Regular Cleaning and Maintenance

Introduction

Inspect the S-Panel PC periodically to determine its general condition. For example:

- Are all power cords and cables connected properly? Have any become loose?
- Are all installation fasteners holding the unit securely?
- Is the ambient temperature within the specified range?
- Are there any scratches or traces of dirt on the installation gasket?

NOTE: HDD health must be regularly checked with system monitor according to the usage. HDD is rotative media requiring to be changed regularly according to usage. Data on HDD must be saved regularly.

The following sections describe maintenance procedures for the S-Panel PC, which can be carried out by a trained, qualified user.

⚠ ⚠ DANGER

HAZARD OF ELECTRIC SHOCK, EXPLOSION OR ARC FLASH

- Remove all power from the device before removing any covers or elements of the system, and prior to installing or removing any accessories, hardware, or cables.
- Unplug the power cable from both the Harmony Industrial PC and the power supply.
- Always use a properly rated voltage sensing device to confirm that power is off.
- Replace and secure all covers or elements of the system before applying power to the unit.
- Use only the specified voltage when operating the Harmony Industrial PC. The AC unit is designed to use 100...240 Vac input. The DC unit is designed to use 24 Vdc input. Always check whether your device is AC or DC powered before applying power.

Failure to follow these instructions will result in death or serious injury.

During operation, the surface temperature of the heat sink may exceed 70 °C (158 °F).

⚠ WARNING

RISK OF BURNS

Do not touch the surface of the heat sink during operation.

Failure to follow these instructions can result in death, serious injury, or equipment damage.

Cleaning Solutions

⚠ CAUTION

HARMFUL CLEANING SOLUTIONS

- Do not clean the unit or any component of the unit with paint thinner, organic solvents, or strong acids.
- Use only a mild soap or detergent that will not harm the poly carbonate material of the screen.

Failure to follow these instructions can result in injury or equipment damage.

Lithium Battery

The Harmony Industrial PC contains one battery, for backing up the real-time clock (RTC).

⚠ DANGER

EXPLOSION HAZARD

For battery replacement, contact customer support.

Failure to follow these instructions will result in death or serious injury.

Appendices

Appendix A
Accessories

Accessories for the S-Panel PC

Available Accessories

Accessories are available as options. The table shows the list of accessories available for the S-Panel PC:

Reference	Description
Interfaces	
HMIYMINNVRAM1(1)	Interface NVRAM
HMIYMINSL24851(1)	Interface 2 x RS-422/485 isolated
HMIYMINSL44851(1)	Interface 4 x RS-422/485
HMIYMINSL22321(1)	Interface 2 x RS-232 isolated
HMIYMINSL42321(1)	Interface 4 x RS-232
HMIYMINIO1(1)	Interface 16 x DI / 8 x DO
HMIYMINAUD21(1)	Interface mini PCIe audio
HMIYMIN1ETH1(1)	Interface 1 x Ethernet Gigabit IEEE1588
HMIYMINCAN1(1)	Interface 2 x CANopen/CanBus
HMIYMINPRO1(1)	Interface 1 x Profibus DP master NVRAM
HMIYMINUSB1(1)	Interface 2 x USB 3.0
HMIYMINGPRS1(1)	Interface 1 x GPRS module
HMIYMINWIFI1(1)	Interface wireless LAN and 2 x antennas
HMIYMINWIFI2	Interface WiFi access point and 2 x antennas
HMIYMINWIFI2(1)	Interface WiFi access point and 2 x antennas
HMIYCABWIFIAN51(1)	Remote wireless LAN antenna cable 5 m
HMIYMIN4GEU1(1)	Interface mini PCIe 4G EU/Asia
HMIYMIN4GUS1(1)	Interface mini PCIe 4G US
HMIYMIN1ETH1	Interface mini PCIe 1 x RJ45 Ethernet for iPC
HMIYMINDVII1(1)	Interface mini PCIe 1 x DVI-I
(1) This reference is not compatible with the Enclosed PC Performance.	

Reference	Description
HMIYMINVGADVID1(1)	Interface mini PCIe 2 x VGA and 1 x DVI-D
Drives	
HMIYHDD50021	Hard disk drive 500 GB
HMIYHDD01T21	Hard disk drive 1 TB
HMIYSSDS80S1	SSD 128 GB
HMIYSSDS240S1	SSD 256 GB
Accessories	
HMIYP752PS11(1)	Removable protective sheet HMIP/D W15”
HMIYP952PS11	Removable protective sheet HMIP/D W19”
HMIYUSBBK111	USB memory key blanc for PC recovery
HMIYPSPMAC1	AC power supply module
HMIYPMKTPSP1(1)	Maintenance kit
HMIYEM1211	Connectors M12 for HMIPEP only
Cables	
HMIYADDPDVI11	Active DP to DVI adapter (DVI-D type)
HMIYCABUSB51	USB cable 5 m (16.4 ft)
HMIYCABM1211	Cables M12 for HMIPEP: 2 x LAN cables: 2 m (6.56 ft) 1 x COM cable: 2 m (6.56 ft) 1 x USB cable: 1.5 m (4.92 ft) 1 x Power cable: 2 m (6.56 ft)
HMIYCAB4GAN51	Remote cable for 4G card 5 m (16.4 ft)
(1) This reference is not compatible with the Enclosed PC Performance.	

Index

0-9

16DI/8DO interface description, *116*
4G (mini PCIe) interface description, *169*

A

AC power supply module, *64*
accessories, *221*

C

CANopen interface description, *140*
certifications, *21*
characteristics, *34*
cleaning, *217*

D

DC power cord Enclosed PC
    connection, *62*
DC power cord S-Panel PC
    connection, *60*
dimensions, *40*

E

enclosed PC
    description, *29*
environmental characteristics, *38*
Ethernet IEEE interface description, *133*

F

first power-up, *51*

G

GPRS interface description, *157*
grounding, *56*

I

installation, *46*
installation requirements, *42*

M

maintenance, *217*
memory card, *106*

N

NVRAM card description, *155*

O

optional interface installation, *110*

P

package contents, *24*
panel PC
    description, *25*
ProfiBus DP interface description, *144*

R

reinstallation procedure, *216*
RS-232, RS-422/485 interface description, *122*

S

serial interface
    pin assignment, *69*
standards, *21*
system monitor
    interface, *178*

T

touch screen calibration, *211*

U

USB interface description, *152*

V

VGA and DVI interface description, *161*

W

wireless LAN interface card, *147*