Harmony Box iPC Modular and Display

Optimized, Universal and Performance (HMIBMI, HMIBMO, HMIBMP, HMIBMU, HMIDM)

User Manual

10/2020

EIO0000002042.09

www.schneider-electric.com

The information provided in this documentation contains general descriptions and/or technical characteristics of the performance of the products contained herein. This documentation is not intended as a substitute for and is not to be used for determining suitability or reliability of these products for specific user applications. It is the duty of any such user or integrator to perform the appropriate and complete risk analysis, evaluation and testing of the products with respect to the relevant specific application or use thereof. Neither Schneider Electric nor any of its affiliates or subsidiaries shall be responsible or liable for misuse of the information contained herein. If you have any suggestions for improvements or amendments or have found errors in this publication, please notify us.

You agree not to reproduce, other than for your own personal, noncommercial use, all or part of this document on any medium whatsoever without permission of Schneider Electric, given in writing. You also agree not to establish any hypertext links to this document or its content. Schneider Electric does not grant any right or license for the personal and noncommercial use of the document or its content, except for a non-exclusive license to consult it on an "as is" basis, at your own risk. All other rights are reserved.

All pertinent state, regional, and local safety regulations must be observed when installing and using this product. For reasons of safety and to help ensure compliance with documented system data, only the manufacturer should perform repairs to components.

When devices are used for applications with technical safety requirements, the relevant instructions must be followed.

Failure to use Schneider Electric software or approved software with our hardware products may result in injury, harm, or improper operating results.

Failure to observe this information can result in injury or equipment damage.

© 2020 Schneider Electric. All rights reserved.

Table of Contents

Safety Information 7
About the Book 9
Chapter 1 Important Information 27
FCC Radio Frequency Interference Statement for USA 28
Certifications and Standards 29
Hazardous Location Installations - For USA and Canada 31
Chapter 2 Physical Overview 37
Package Contents 38
Box iPC Basic Optimized (HMIBMI) Description 43
Box iPC Optimized (HMIBMO) Description 47
Box iPC Universal and Performance (HMIBMU/HMIBMP) Description 53
Displays Description 59
Display Adapter Description and Configuration 63
Displays and Touch Behavior 69
Chapter 3 Characteristics 83
Box iPC Characteristics 84
Display Characteristics 88
Display Adapter and Receiver / Transmitter Characteristics 89
Power Supply Characteristics 91
Environmental Characteristics 93
Chapter 4 Dimensions 95
Box iPC Dimensions 96
Display Dimensions 99
Display Adapter Dimensions 107
Chapter 5 Installation 109
Introduction 110
Box iPC Installation 111
Display and Box iPC Installation 115
Display and Display Adapter Installation 126
Chapter 6 Getting Started 133
First Power Up 133
Chapter 7 Connections 137
Grounding 138
Connecting the DC Power Cord 143
AC Power Supply Module Description 146

Box iPC and AC Power Supply Module Installation 149
Display Adapter and AC Power Supply Module Installation. 156
UPS Module - Description and Installation. 162
Box iPC Interface Connections 173
Chapter 8 Hardware Modifications 179
8.1 Before Modifications. 180
Before Making Modifications 180
8.2 Box iPC and Storage Modifications 183
Box iPC Optimized (HMIBMO) M.2 Card Installation. 184
Box iPC Optimized (HMIBMO Expandable) HDD/SSD Drive Installation 187
Box iPC Universal and Performance (HMIBMU/HMIBMP) CFast Card Installation 192
Box iPC Universal and Performance (HMIBMU/HMIBMP) mSATA Card Installation 195
Box iPC Universal and Performance (HMIBMU/HMIBMP) mini PCIe and PCI/PCIe Card Installation 199
Box iPC Universal and Performance (HMIBMU/HMIBMP) HDD/SSD Drive Installation. 204
8.3 Box iPC Universal and Performance Fan Kit Installation 207
Fan Kit Installation 207
8.4 Optional Cards and Optional Interfaces 209
Optional Interface Installation. 210
16DI/8DO Interface Description 221
8 x Analog Input Interface Description 228
RS-232, RS-422/485 Interface Description 235
Ethernet IEEE Interface Description 248
CANopen Interface Description 251
Profibus DP Interface Description 255
Wireless LAN Interface Card Description. 259
Audio Interface (for Box iPC Universal/Performance) Description. . . . 264
Audio Interface Description 266
USB Interface Description 271
NVRAM Card Description 274
mini PCIe to Display Adapter Interface Description 276
VGA and DVI Interface Description 282
GPRS Description 300
4G Cellular Description 305
Cyber Security TPM Module Description 324

Chapter 9 Configuration of the Boot 351
9.1 BIOS and UEFI General Information 352
BIOS and UEFI **Main** Menu 353
BIOS and UEFI **Security** Menu 354
BIOS and UEFI **Save & Exit** Menu 355
9.2 BIOS Box iPC Universal and Box iPC Performance (HMIBMU/HMIBMP) 356
BIOS **Advanced** Menu 357
BIOS **Chipset** Menu 360
BIOS **Boot** Menu 362
9.3 UEFI Box iPC Optimized (HMIBMI/HMIBMO) 363
UEFI **Advanced** Menu 364
UEFI **Chipset** Menu 367
UEFI **Boot** Menu 369
Chapter 10 System Monitor 371
System Monitor Interface 372
Device Management - Monitoring Rules 378
Monitor Account Setting 398
Monitor System Setting 401
Installing Node-RED from HMI System Monitor OS SKU 406
Chapter 11 IIoT and Cyber Security 409
Cyber Security 410
IIoT and Node-RED 414
Quick Start Configuration 417
Chapter 12 McAfee Software and Manager Option 437
Installing the McAfee Software 438
McAfee Manager 439
Uninstalling the McAfee Software and Manager Tool 441
Chapter 13 Software API 443
Intelligent Management for Embedded Platform 443
Chapter 14 Maintenance 445
Reinstallation Procedure 446
Regular Cleaning and Maintenance 447
Chapter 15 Operating System Backup and Restoration 449
Operating System Recovery 450
Operating System Backup 454
Operating System Restoration 456

Appendices 459
Appendix A Accessories 461
Accessories for the Box iPC. 461
Index 465

Safety Information

Important Information

NOTICE

Read these instructions carefully, and look at the equipment to become familiar with the device before trying to install, operate, service, or maintain it. The following special messages may appear throughout this documentation or on the equipment to warn of potential hazards or to call attention to information that clarifies or simplifies a procedure.

The addition of this symbol to a “Danger” or “Warning” safety label indicates that an electrical hazard exists which will result in personal injury if the instructions are not followed.

This is the safety alert symbol. It is used to alert you to potential personal injury hazards. Obey all safety messages that follow this symbol to avoid possible injury or death.

⚠ DANGER

DANGER indicates a hazardous situation which, if not avoided, **will result in** death or serious injury.

⚠ WARNING

WARNING indicates a hazardous situation which, if not avoided, **could result in** death or serious injury.

⚠ CAUTION

CAUTION indicates a hazardous situation which, if not avoided, **could result** in minor or moderate injury.

NOTICE

NOTICE is used to address practices not related to physical injury.

PLEASE NOTE

Electrical equipment should be installed, operated, serviced, and maintained only by qualified personnel. No responsibility is assumed by Schneider Electric for any consequences arising out of the use of this material.

A qualified person is one who has skills and knowledge related to the construction and operation of electrical equipment and its installation, and has received safety training to recognize and avoid the hazards involved.

DANGER

HAZARD OF ELECTRIC SHOCK

- Do not open product.
- Product to be serviced by qualified people only.

Failure to follow these instructions will result in death or serious injury.

WARNING

UNAUTHENTICATED ACCESS AND SUBSEQUENT UNAUTHORIZED MACHINE OPERATION

- Evaluate whether your environment or your machines are connected to your critical infrastructure and, if so, take appropriate steps in terms of prevention, based on Defense-in-Depth, before connecting the automation system to any network.
- Limit the number of devices connected to a network to the minimum necessary.
- Isolate your industrial network from other networks inside your company.
- Protect any network against unintended access by using firewalls, VPN, or other, proven security measures.
- Monitor activities within your systems.
- Prevent subject devices from direct access or direct link by unauthorized parties or unauthenticated actions.
- Prepare a recovery plan including backup of your system and process information.

Failure to follow these instructions can result in death, serious injury, or equipment damage.

About the Book

At a Glance

Document Scope

This manual describes the configuration and usage of the Harmony Box iPC and displays, part of the range of Harmony Industrial PC, for its cataloged and configured product offers.

The Harmony Box iPC are designed to operate in an industrial environment.

1 **Cataloged product offer:**

- HMIBMIEA5DD1101 - Box iPC Basic Optimized - DC - Win 10 - 1 slot
  - 12...24 Vdc
  - Atom E3930 processor
  - 4 GB RAM
  - 64 GB eMMc (soldered)
  - Windows 10 IoT Enterprise 2016 LTSB/2019 LTSC[*1] Entry, UEFI boot
  - 1 mini PCIe for optional interface
- HMIBMIEA5DD110L - Box iPC Basic Optimized - DC - Win 10 - 1 slot
  - 12...24 Vdc
  - Atom E3930 processor
  - 4 GB RAM
  - 128 GB eMMc (soldered)
  - Windows 10 IoT Enterprise 2016 LTSB/2019 LTSC[*1] Entry, UEFI boot
  - 1 mini PCIe for optional interface
- HMIBMIEA5DD1E01 - IIoT Smart Box - DC - Win 10 - 1 slot
  - 12...24 Vdc
  - Atom E3930 processor
  - 4 GB RAM
  - 64 GB eMMc (soldered)
  - Windows 10 IoT Enterprise 2016 LTSB/2019 LTSC[*1] Entry, UEFI boot, TPM 2.0 module
  - 1 mini PCIe for optional interface
- HMIBMIEA5DD1001 - Box iPC Basic Optimized - DC - Base unit - 1 slot
  - 12...24 Vdc
  - Atom E3930 processor
  - 4 GB RAM
  - 64 GB eMMc (soldered)
  - 1 mini PCIe for optional interface

- HMIBMIEA5DD100A - Box iPC Basic Optimized - DC - Base unit - 1 slot
  - 12...24 Vdc
  - Atom E3930 processor
  - 4 GB RAM
  - 128 GB eMMc (soldered)
  - 1 mini PCIe for optional interface
  - Conformal coating
- HMIBMOMA5DD1E01 - IIoT Edge Box Regular - DC - Win 10 - 1 slot
  - 12...24 Vdc
  - Atom E3930 processor
  - 4 GB RAM
  - 64 GB M.2 SSD
  - Windows 10 IoT Enterprise 2016 LTSB/2019 LTSC[*1] Entry, UEFI boot, TPM 2.0 module
  - 1 mini PCIe
- HMIBMOMA5DD1101 - Box iPC Optimized Regular - DC - Win 10 - 1 slot
  - 12...24 Vdc
  - Atom E3930 processor
  - 4 GB RAM
  - 64 GB M.2 SSD
  - Windows 10 IoT Enterprise 2016 LTSB/2019 LTSC[*1] Entry, UEFI boot
  - 1 mini PCIe
- HMIBMO0A5DD1001 - Box iPC Optimized Regular - DC - Base unit - 1 slot
  - 12...24 Vdc
  - Atom E3930 processor
  - 4 GB RAM
  - 1 mini PCIe
- HMIBMOMA5DDF10L - Box iPC Optimized Expandable - DC - Win 10 - 1 slot
  - 12...24 Vdc
  - Atom E3930 processor
  - 4 GB RAM
  - 256 GB M.2 SSD
  - 2.5" HDD/SSD slot
  - Windows 10 IoT Enterprise 2016 LTSB/2019 LTSC[*1] Entry, UEFI boot
  - 1 mini PCIe for optional interface
- HMIBMO0A5DDF101 - Box iPC Optimized Expandable - DC - Base unit - 1 slot
  - 12...24 Vdc
  - Atom E3930 processor
  - 4 GB RAM
  - 2.5" HDD/SSD slot
  - 1 mini PCIe for optional interface

- HMIBMO0A5DDF10A - Box iPC Optimized Expandable - DC - Base unit - 1 slot
  - 12...24 Vdc
  - Atom E3930 processor
  - 8 GB RAM
  - 2.5" HDD/SSD slot
  - 1 mini PCIe for optional interface
  - Conformal coating
- HMIBMUHI29D2801 - Box iPC Universal HDD - DC - Win 8.1 - 2 slots
  - 24 Vdc
  - Celeron-2980U processor
  - 4 GB RAM
  - 500 GB Hard disk drive (HDD)
  - Win 10 IoT Enterprise 64 bit MUI
  - 2 mini PCIe
- HMIBMUSI29D2801 - Box iPC Universal SSD - DC - Win 8.1 - 2 slots
  - 24 Vdc
  - Celeron-2980U processor
  - 4 GB RAM
  - 256 GB Flash drive (SSD)
  - Win 10 IoT Enterprise 64 bit MUI
  - 2 mini PCIe
- HMIBMUCI29D2W01 - Box iPC Universal CFast - DC - WES - 2 slots
  - 24 Vdc
  - Celeron-2980U processor
  - 4 GB RAM
  - 32 GB CFast card
  - Windows Embedded Standard 7 (WES7P) SP1 64 bit MUI
  - 2 mini PCIe
- HMIBMU0I29D2001 - Box iPC Universal - DC - Base unit - 4 GB - 2 slots
  - 24 Vdc
  - Celeron-2980U processor
  - 4 GB RAM
  - 2 mini PCIe
- HMIBMU0I29D200A - Box iPC Universal - DC - Base unit - 8 GB - 2 slots
  - 24 Vdc
  - Celeron-2980U processor
  - 8 GB RAM
  - 2 mini PCIe
  - Conformal coating

- HMIBMUHI29D4801 - Box iPC Universal HDD - DC - Win 8.1 - 4 slots
  - 24 Vdc
  - Celeron-2980U processor
  - 4 GB RAM
  - 500 GB Hard disk drive (HDD)
  - Win 10 IoT Enterprise 64 bit MUI
  - 2 mini PCIe + 1 PCI + 1 PCIe
- HMIBMUSI29D4801 - Box iPC Universal SSD - DC - Win 8.1 - 4 slots
  - 24 Vdc
  - Celeron-2980U processor
  - 4 GB RAM
  - 256 GB Flash drive (SSD)
  - Win 10 IoT Enterprise 64 bit MUI
  - 2 mini PCIe + 1 PCI + 1 PCIe
- HMIBMUCI29D4W01 - Box iPC Universal CFast - DC - WES - 4 slots
  - 24 Vdc
  - Celeron-2980U processor
  - 4 GB RAM
  - 32 GB CFast card
  - Windows Embedded Standard 7 (WES7P) SP1 64 bit MUI
  - 2 mini PCIe + 1 PCI + 1 PCIe
- HMIBMU0I29D4001 - Box iPC Universal - DC - Base unit - 4 slots
  - 24 Vdc
  - Celeron-2980U processor
  - 4 GB RAM
  - 2 mini PCIe + 1 PCI + 1 PCIe
- HMIBMU0I29D400A - Box iPC Universal - DC - Base unit - 4 slots
  - 24 Vdc
  - Celeron-2980U processor
  - 8 GB RAM
  - 2 mini PCIe + 1 PCI + 1 PCIe
  - Conformal coating
- HMIBMU0I29DI00A - Box iPC Universal - DC - Base unit - 4 slots
  - 24 Vdc
  - Celeron-2980U processor
  - 8 GB RAM
  - 2 mini PCIe + 2 PCI
  - Conformal coating

- HMIBMU0I29DE00A - Box iPC Universal - DC - Base unit - 4 slots
  - 24 Vdc
  - Celeron-2980U processor
  - 8 GB RAM
  - 2 mini PCIe + 2 PCIe
  - Conformal coating
- HMIBMPHI74D2801 - Box iPC Performance HDD - DC - Win 8.1 - 2 slots
  - 24 Vdc
  - i7-4650U processor
  - 8 GB RAM
  - 500 GB Hard disk drive (HDD)
  - Win 10 IoT Enterprise 64 bit MUI
  - 2 mini PCIe
- HMIBMPSI74D2801 - Box iPC Performance SSD - DC - Win 8.1 - 2 slots
  - 24 Vdc
  - i7-4650U processor
  - 8 GB RAM
  - 256 GB Flash drive (SSD)
  - Win 10 IoT Enterprise 64 bit MUI
  - 2 mini PCIe
- HMIBMP0I74D2001 - Box iPC Performance - DC - Base unit - 2 slots
  - 24 Vdc
  - i7-4650U processor
  - 8 GB RAM
  - 2 mini PCIe
- HMIBMP0I74D200A - Box iPC Performance - DC - Base unit - 2 slots
  - 24 Vdc
  - i7-4650U processor
  - 16 GB RAM
  - 2 mini PCIe
  - Conformal coating
- HMIBMPHI74D4801 - Box iPC Performance HDD - DC - Win 8.1- 4 slots
  - 24 Vdc
  - i7-4650U processor
  - 8 GB RAM
  - 500 GB Hard disk drive (HDD)
  - Win 10 IoT Enterprise 64 bit MUI
  - 2 mini PCIe + 1 PCI + 1 PCIe

- HMIBMPSI74D4801 - Box iPC Performance SSD - DC - Win 8.1 - 4 slots
  - 24 Vdc
  - i7-4650U processor
  - 8 GB RAM
  - 256 GB Flash drive (SSD)
  - Win 10 IoT Enterprise 64 bit MUI
  - 2 mini PCIe + 1 PCI + 1 PCIe
- HMIBMPSI74D470L - Box iPC Performance SSD - DC - Win 7 - 4 slots
  - 24 Vdc
  - i7-4650U processor
  - 8 GB RAM
  - 256 GB Flash drive (SSD)
  - Windows 7 Ultimate SP1 64 bit MUI
  - 2 mini PCIe + 1 PCI + 1 PCIe
- HMIBMP0I74D4001 - Box iPC Performance - DC - Base unit - 4 slots
  - 24 Vdc
  - i7-4650U processor
  - 8 GB RAM
  - 2 mini PCIe + 1 PCI + 1 PCIe
- HMIBMP0I74D400A - Box iPC Performance - DC - Base unit - 4 slots
  - 24 Vdc
  - i7-4650U processor
  - 16 GB RAM
  - 2 mini PCIe + 1 PCI + 1 PCIe
  - Conformal coating
- HMIBMP0I74DI00A - Box iPC Performance - DC - Base unit - 4 slots
  - 24 Vdc
  - i7-4650U processor
  - 16 GB RAM
  - 2 mini PCIe + 2 PCI
  - Conformal coating
- HMIBMP0I74DE00A - Box iPC Performance - DC - Base unit - 4 slots
  - 24 Vdc
  - i7-4650U processor
  - 16 GB RAM
  - 2 mini PCIe + 2 PCIe
  - Conformal coating

- HMIDM6421 - display 4:3 12” single touch for Box iPC.
- HMIDM6521 - display W12” multi-touch for Box iPC.
- HMIDM7421 - display 4:3 15” single touch for Box iPC.
- HMIDM7521 - display W15” multi-touch for Box iPC.
- HMIDM9521 - display W19” multi-touch for Box iPC.
- HMIDMA521 - display W22” multi-touch for Box iPC.
- HMIDADP11 - Display Adapter for display module.

*1:
- Windows 10 IoT Enterprise 2016 LTSB: SV: 7.0 or less
- Windows 10 IoT Enterprise 2019 LTSC: SV: 8.0 or more

NOTE: The part number for your unit may not be included in the user manual. Commercial part numbers listed in the user manual are for products available when the user manual was published. New part numbers may be added to the product range.

New and existing cataloged part numbers are always composed of a prefix (HMI), followed by a serial arrangement of 12 alphanumeric characters. Each one of the twelve characters matches with one characteristic of the cataloged Harmony Box iPC Optimized, Universal or Performance, such as storage device size, storage device type, memory size, and bundled software.

Use the following legend to identify the features that correspond with each character of the part number:

Character number	Prefix	1	2	3	4	5	6	7	8	9	10	11	12
Part number	HMI												
Range name	Harmony Box iPC Optimized, Universal or Performance												
iPC family		B											
Type			M										
Version	Fully Optimized			I									
	Optimized			O									
	Universal			U									
	Performance			P									

*1:
- Windows 10 IoT Enterprise 2016 LTSB: SV: 7.0 or less
- Windows 10 IoT Enterprise 2019 LTSC: SV: 8.0 or more

Character number	Prefix	1	2	3	4	5	6	7	8	9	10	11	12
Drive	Hard disk drive (HDD)				H								
	Flash drive (SSD)				S								
	CFast card (CF)				C								
	M.2 SSD				M								
	eMMc (soldered)				E								
	None				0								
CPU type	Atom E3930					A	5	D					
	Core i7-4650U					I	7	4					
	Celeron 2980U					I	2	9					
Power supply	DC								D				
Expansion slots	1 mini PCIe									1			
	2 mini PCIe									2			
	2 mini PCIe and PCIe and PCI									4			
	2 mini PCIe and 2 PCI									I			
	2 mini PCIe and 2 PCIe									E			
	1 mini PCIe for optional interface + 2.5" HDD/SSD slot									F			
Operating system	None										0		
	Windows Embedded Standard 7 (WES7P) SP1 64 bit MUI										W		
	Windows 7 Ultimate SP1 64 bit MUI										7		
	Windows Embedded 8.1 Industry 64 bit MUI										8		
	Windows 10 IoT Enterprise 2016 LTSB/2019 LTSC entry*1										1		
	Windows 10 IoT Enterprise 2016 LTSB/2019 LTSC entry*1, UEFI boot, TPM 2.0 module, Node-RED										E		
Bundled software	None											0	
Hardware iteration	Initial												1
	Conformal coating												A
	To be completed												L

*1:
- Windows 10 IoT Enterprise 2016 LTSB: SV: 7.0 or less
- Windows 10 IoT Enterprise 2019 LTSC: SV: 8.0 or more

2 **Configured product offer:**

In addition to the catalog offer, other configurations may be available in some countries.

These configured offers use a fixed method of identification. The configured part numbers are always composed of an arrangement of 20 alphanumeric characters. The first 6 characters are always **HMIPCC**. The remaining 14 characters match with one characteristic of the configured Harmony Box iPC Optimized, Universal or Performance, such as storage device size, storage device type, memory size, and bundled software.

The configured offers have similar characteristics and functionalities as the cataloged offer described in this manual.

In addition to this part number, a configuration number is printed on the product label.

The configuration number format is as follows:

Character number	Prefix (1-6)	7	8	9	10	11	12	13	14	15	16	17	18	19	20
Part number	HMI PCC														
Form factor	Modular Atom PC	L													
	Modular Celeron PC	U													
	Modular Core i7 PC	P													
	Display Adapter	A													
Product generation	Second generation		2												
Modular displays	None			B											
	Display PC 4:3 12" - XGA			6											
	Display PC W12" - WXGA			D											
	Display PC 4:3 15" - XGA			7											
	Display PC W15" - FWXGA			J											
	Display PC W19" - FWXGA			L											
	Display PC W21" - FHD			N											

Character number	Prefix (1-6)	7	8	9	10	11	12	13	14	15	16	17	18	19	20
Box iPC modular	None				N										
	Box iPC modular Universal DC 4 GB RAM				C										
	Box iPC modular Universal DC 8 GB RAM				D										
	Box iPC modular Universal DC 4 GB RAM, 1 PCI, and 1 PCIe				E										
	Box iPC modular Universal DC 8 GB RAM, 1 PCI, and 1 PCIe, conformal coating				F										
	Box iPC modular Universal DC 8 GB RAM, 2 PCI, conformal coating				G										
	Box iPC modular Universal DC 8 GB RAM, 2 PCIe, conformal coating				H										
	Box iPC modular Performance DC 8 GB RAM				J										
	Box iPC modular Performance DC 16 GB RAM				U										
	Box iPC modular Performance DC 8 GB RAM, 1 PCI and1 PCIe				K										
	Box iPC modular Performance DC 16 GB RAM, 1 PCI, and 1 PCIe, conformal coating				L										
	Box iPC modular Performance DC 16 GB RAM, 2 PCI, conformal coating				M										
	Box iPC modular Performance DC 16 GB RAM, 2 PCIe, conformal coating				O										
	Box iPC modular Optimized DC 4 GB RAM				1										
	Box iPC modular Optimized DC 4 GB RAM, expandable				2										
	Box iPC modular Optimized DC 8 GB RAM, expandable, conformal coating				4										
	Box iPC modular Basic Optimized DC 4 GB RAM, eMMc (soldered) 64 GB				5										
	Box iPC modular Basic Optimized DC 4 GB RAM, eMMc (soldered) 128 GB				6										

Character number	Prefix (1-6)	7	8	9	10	11	12	13	14	15	16	17	18	19	20
CPU type	None (Display Adapter)					N									
	Box iPC Optimized - Atom-E3930 fanless					B									
	Box iPC Universal - Celereon 2980U fanless					C									
	Box iPC Universal - Celeron 2980U with fan kit for expansion card above 3 W					F									
	Box iPC Performance - Core i7-4650U fanless					7									
	Box iPC Performance - Core i7-4650U with fan kit for expansion card above 3 W					W									
Power supply	AC (including for Hazardous Locations)						A								
	AC (not for Hazardous Locations)						B								
	DC						D								
RAM	None (Display Adapter)							N							
	1 GB							1							
	2 GB							2							
	4 GB							4							
	8 GB							8							
	16 GB							A							
Operating system	None								0						
	Windows Embedded Standard 7 (WES7P) SP1 64 bit MUI								4						
	Windows 7 Ultimate SP1 64 bit MUI								6						
	Windows Embedded 8.1 Industry 64 bit MUI								8						
	Windows 10 IoT Enterprise 64 bit MUI for Box iPC Optimized								A						
	Windows 10 IoT Enterprise 64 bit MUI for Box iPC Universal								B						
	Windows 10 IoT Enterprise 64 bit MUI for Box iPC Performance								C						

Character number	Prefix (1-6)	7	8	9	10	11	12	13	14	15	16	17	18	19	20
Storage device	None									N					
	CFast 32 GB									X					
	HDD 500 GB for Box iPC Universal and Performance									J					
	HDD 1 TB for Box iPC Universal and Performance									K					
	SSD 128 GB for Box iPC Universal and Performance									L					
	SSD 256 GB for Box iPC Universal and Performance									P					
	M.2 65 GB for Box iPC Optimized									1					
	M.2 128 GB for Box iPC Optimized									2					
	M.2 256 GB for Box iPC Optimized									3					
	eMMc (soldered) for Box iPC HMIBMI									4					
Optional interfaces	None										0				
	Interface - NVRAM										1				
	Interface - 2 x RS 422/485 isolated										2				
	Interface - 4 x RS 422/485										3				
	Interface - 2 x USB 3.0										4				
	Interface - 2 x RS 232 isolated										5				
	Interface - 4 x RS 232C										6				
	Interface - 16 x DI / 8 x DO										8				
	Interface - audio (pin header) for Box iPC Universal and Performance										C				
	Interface - audio										A				
	Interface - Cellular 3G										D				
	Interface - wireless LAN board and 2 x antennas										E				
	Interface - 2 x CANopen CANBus										G				
	Interface - 1 x PROFIBUS DP master NVRAM										J				
	TPM 2.0 module										L				
	Interface - transmistter to Display Adapter										T				
	Interface - Cellular 4G for US										M				
	Interface - Cellular 4G for EU /ASIA										N				
	Interface - DVI-I										U				
	Interface - DVI-D / 2 x VGA										V				
	Interface - DVI-D										W				
	Interface - 2 x VGA										X				
	Interface - mini PCIe 8 x analog input										Z				

Character number	Prefix (1-6)	7	8	9	10	11	12	13	14	15	16	17	18	19	20
Second storage	None											N			
	CFast 32 GB in CFast slot											X			
	HDD 500 GB for Box iPC Universal and Performance											J			
	HDD 1 TB for Box iPC Universal and Performance											K			
	SSD 128 GB for Box iPC Universal and Performance											L			
	SSD 256 GB for Box iPC Universal and Performance											P			
	HDD 500 GB for Box iPC Optimized											B			
	HDD 1 TB for Box iPC Optimized											D			
	SSD 128 GB for Box iPC Optimized											W			
	SSD 256 GB for Box iPC Optimized											Z			
Software bundle	None												N		
	EcoStruxure Operator Terminal Expert RT unlimited license												X		
	EcoStruxure Machine Expert Controller												C		
	EcoStruxure Machine SCADA Expert runtime 1.5 K license key code												P		
	EcoStruxure Machine SCADA Expert runtime 4 K license key code												M		
	EcoStruxure Machine SCADA Expert runtime 32 K license key code												K		
	EcoStruxure Machine SCADA Expert runtime 64 K license key code												L		
Reserved	None													0	
Reserved	None														0

NOTE: All instructions applicable to the enclosed product and all safety precautions must be observed.

Validity Note

This documentation is valid for this product.

The technical characteristics of the devices described in the present document also appear online. To access the information online:

Step	Action
1	Go to the Schneider Electric home page *www.schneider-electric.com*.
2	In the **Search** box type the reference of a product or the name of a product range. ● Do not include blank spaces in the reference or product range. ● To get information on grouping similar modules, use asterisks (*).
3	If you entered a reference, go to the **Product Datasheets** search results and click on the reference that interests you. If you entered the name of a product range, go to the **Product Ranges** search results and click on the product range that interests you.
4	If more than one reference appears in the **Products** search results, click on the reference that interests you.
5	Depending on the size of your screen, you may need to scroll down to see the datasheet.
6	To save or print a datasheet as a .pdf file, click **Download XXX product datasheet**.

The characteristics that are described in the present document should be the same as those characteristics that appear online. In line with our policy of constant improvement, we may revise content over time to improve clarity and accuracy. If you see a difference between the document and online information, use the online information as your reference.

Registered trademarks

PL7, EcoStruxure, and Unity are registered trademarks of Schneider Electric.

Microsoft® and Windows® are registered trademarks of Microsoft corporation.

Intel®, Core i7® and Atom® are registered trademarks of Intel corporation.

Hazardous Location

The Box iPC HMIBMI, HMIPCC•2L, HMIPCC•2N, HMIPCCL2B5, HMIPCCL2B6, and the displays HMIDM9521, HMIDMA521 are not certified for use in Class I Division 2 hazardous (classified) locations.

⚠ DANGER

POTENTIAL FOR EXPLOSION IN HAZARDOUS LOCATION

Do not use these products in hazardous locations.

Failure to follow these instructions will result in death or serious injury.

The HMIBMP, HMIBMU, HMIBMO, HMIPCCP2B, HMIPCCU2B, HMIPCCL2B1...4, HMIPCCL2D1...4, HMIPCCL2J1...4, HMIPCCL261...4, HMIPCCL271...4, HMIPCCU26, HMIPCCU27, HMIPCCU2D, HMIPCCU2J, HMIPCCP26, HMIPCCP27, HMIPCCP2D, HMIPCCP2J, and the Display Adapter HMIDADP11 are certified for use in Class I Division 2 hazardous (classified) location (see chapter "Certifications and Standards"). Observe the following:

⚠ WARNING

EXPLOSION HAZARD

- Always confirm the ANSI/ISA 12.12.01 and CSA C22.2 N°213 hazardous location rating of your device before installing or using it in a hazardous location.
- To power on or power off a Harmony Industrial PC installed in a Class I, Division 2 hazardous location, you must either:
  - Use a switch located outside the hazardous environment, or
  - Use a switch certified for Class I, Division 1 operation inside the hazardous area.
- Substitution of any components may impair suitability for Class I, Division 2.
- Do not connect or disconnect equipment unless power has been switched off or the area is known to be non-hazardous. This applies to all connections including power, ground, serial, parallel, network, and rear USB connections.
- Never use unshielded / ungrounded cables in hazardous locations.
- When enclosed, keep enclosure doors and openings closed at all times to avoid the accumulation of foreign matter inside the workstation.
- Do not open lid nor use the USB connectors in hazardous locations.
- Do not expose to direct sunlight or UV light source.

Failure to follow these instructions can result in death, serious injury, or equipment damage.

NOTE:

- When used with the display HMIDM6421, HMIDM6521, HMIDM7421, or HMIDM7521, the Harmony Box iPC Optimized, Universal or Performance can be used in Class I Division 2 hazardous (classified) locations.
- When using the DC power supply, the Display Adapter (HMIDADP11) with the display can be classified hazardous locations.
- When using the AC power supply, the Display Adapter, the display, and the AC power supply adapter for 100 W (HMIYMMAC1) are certified for use in Class I Division 2 hazardous (classified) locations.

Product Related Information

⚠ WARNING

LOSS OF CONTROL

- The designer of any control scheme must consider the potential failure modes of control paths and, for certain critical control functions, provide a means to achieve a safe state during and after a path failure. Examples of critical control functions are emergency stop and overtravel stop.
- Separate or redundant control paths must be provided for critical control functions.
- System control paths may include communication links. Consideration must be given to the implications of unanticipated transmission delays or failures of the link.(1)
- Each implementation of a Harmony Industrial PC must be individually and thoroughly tested for proper operation before being placed into service.

Failure to follow these instructions can result in death, serious injury, or equipment damage.

(1) For additional information, refer to *NEMA ICS 1.1 (latest edition)*, *"Safety Guidelines for the Application, Installation, and Maintenance of Solid State Control" and to NEMA ICS 7.1 (latest edition),"Safety Standards for Construction and Guide for Selection, Installation and Operation of Adjustable-Speed Drive Systems" or other applicable standards in your location.*

The display 4:3 12” and 4:3 15” have a touch screen with analog-resistive touch technology that may operate abnormally when two or more points are touched.

⚠ WARNING

UNINTENDED EQUIPMENT OPERATION

Do not touch two or more points on display.

Failure to follow these instructions can result in death, serious injury, or equipment damage.

The display W12”, W15”, W19” and W22” multi-touch have a touch screen with projected capacitive touch technology that may operate abnormally when the surface is wet.

⚠ WARNING

LOSS OF CONTROL

- Do not touch the touch screen area during Operating System startup.
- Do not operate when the touch screen surface is wet.
- If the touch screen surface is wet, remove any excessive water with a soft cloth before operation.
- Make sure to use only the authorized grounding configurations shown in the grounding procedure.

Failure to follow these instructions can result in death, serious injury, or equipment damage.

NOTE:

- If a conductive material (water, etc.) is on a touch screen, touch control is disabled to avoid touch input errors. After the conductive material is removed, the touch control will recover automatically.
- Do not touch the touch screen area during Operating System startup since "touch panel firmware" initializes automatically when Windows starts up.

NOTE:

The following characteristics are specific to the LCD and are considered normal behavior:

- LCD screen may show unevenness in the brightness of certain images or may appear different when seen from outside the specified viewing angle. Extended shadows, or cross-talk, may also appear on the sides of screen images.
- LCD screen pixels may contain black and white-colored spots and color display may seem to have changed over time.
- When the same image is displayed on the screen for a long period, an after-image may appear when the image is changed. If this happens, turn off the unit, wait 10 seconds, and then restart it.
- The panel brightness may decrease when used for a long time in an environment continuously filled with inert gas. To prevent deterioration of panel brightness, regularly ventilate the panel.

NOTE: The Harmony Box iPC Optimized, Universal or Performance is a configurable device and is not based on a real-time operating system. Changes to the software and settings of the following must be considered new implementations as described in the previous warning messages. Examples of such changes include:

- System BIOS
- System monitor
- Operating system
- Installed hardware
- Installed software

NOTE: Windows Operating System includes security protection for USB devices. When using some USB devices, the system may experience technical issues. The resolution is available here: *http://www.schneider-electric.com/en/faqs/index?page=content&id=FA290340&actp=search&viewlocale=en_US&searchid=1469171130324#__highlight*

⚠ WARNING

UNINTENDED EQUIPMENT OPERATION

Use only Schneider Electric software with the devices described in this manual.

Failure to follow these instructions can result in death, serious injury, or equipment damage.

Chapter 1
Important Information

General

This chapter describes specific aspects related to the operation of the Harmony Box iPC.

What Is in This Chapter?

This chapter contains the following topics:

Topic	Page
FCC Radio Frequency Interference Statement for USA.	28
Certifications and Standards	29
Hazardous Location Installations - For USA and Canada	31

FCC Radio Frequency Interference Statement for USA.

Federal Communications Commission (FCC) Radio Interference Information

This equipment has been tested and found to comply with the federal communications commission (FCC) limits for a Class A digital device, according to Part 15 of the FCC rules. These limits are designed to provide reasonable protection against harmful interference in a commercial, industrial, or business environment. This equipment generates, uses, and can radiate radio frequency energy and, if not installed and used in accordance with the instructions, may cause or be subject to interference with radio communications. To minimize the possibility of electromagnetic interference in your application, observe the following two rules:

- Install and operate the Harmony Industrial PC in such a manner that it does not radiate sufficient electromagnetic energy to cause interference in nearby devices.
- Install and test the Harmony Industrial PC to ensure that the electromagnetic energy generated by nearby devices does not interfere with the Harmony Industrial PC's operation.

Changes or modifications not expressly approved by the party responsible for compliance could void the user’s authority to operate this product.

⚠ WARNING

ELECTROMAGNETIC / INTERFERENCE

Electromagnetic radiation may disrupt the Harmony Industrial PC's operations, leading to unintended equipment operation. If electromagnetic interference is detected:

- Increase the distance between the Harmony Industrial PC and the interfering equipment.
- Reorient the Harmony Industrial PC and the interfering equipment.
- Reroute power and communication lines to the Harmony Industrial PC and the interfering equipment.
- Connect the Harmony Industrial PC and the interfering equipment to different power supplies.
- Always use shielded cables when connecting the Harmony Industrial PC to a peripheral device or another computer.

Failure to follow these instructions can result in death, serious injury, or equipment damage.

Certifications and Standards

Introduction

Schneider Electric submitted this product for independent testing and qualification by third-party agencies. These agencies have certified this product as meeting the following standards.

NOTE: Always refer to the markings on the product to confirm the certifications.

Certifications for the Displays HMIDM6421, HMIDM6521, HMIDM7421, HMIDM7521, HMIDM9521, HMIDMA521 and for the Box HMIBMI, HMIPCCL2B5, HMIPCCL2B6

- Underwriters Laboratories Inc., UL 62368-1, and CSA 62368-1 (Audio/Video, Information and Communication Technology Equipment).
- RCM and EAC. Refer to product markings.

Certifications for the Box iPC HMIPCCP27, HMIPCCP2J, HMIPCCU27, and HMIPCCU2J

- Industrial Control Equipment (UL 61010-2-201 and CSA C22.2 N° 61010-2-201) and for use in Class I Division 2 hazardous (classified) locations (ANSI/ISA 12.12.01 and CSA22.2 N°213). Refer to product markings.
- CCC, RCM, and EAC. Refer to product markings.
- CE Atex and IEC Ex as 3GD equipment category (for DC models). Refer to product markings.
- CE Atex and IEC Ex as 3D equipment category (for AC models). Refer to product markings.

Certifications for the Box iPC HMIBMP, HMIPCCP2B, HMIPCCP27, HMIPCCP2J (and Optional Displays HMIDM7421, HMIDM7521)

- DNV-GL (Merchant Navy agency).
- CCC, RCM, and EAC. Refer to product markings.

Certifications for the Box iPC HMIBMP, HMIBMU, HMIBMO, HMIPCCP2B, HMIPCCU2B, HMIPCCL2B1...4 and HMIDM7421, HMIDM7521

- Industrial Control Equipment (UL 61010-2-201 and CSA C22.2 N° 61010-2-201) and for use in Class I Division 2 hazardous (classified) locations (ANSI/ISA 12.12.01 and CSA22.2 N°213). Refer to product markings.
- For CE Atex and IEC Ex as 3GD equipment category (for DC models). Refer to product markings
- For CE Atex and IEC Ex as 3D equipment category (for AC models). Refer to product markings

Certifications for the Displays HMIDM6421, HMIDM6521, HMIDM7421, HMIDM7521 with a Box iPC HMIBMP, HMIPCCP2B, HMIBMU, HMIPCCU2B, HMIBMO, HMIPCCL2B1...4, HMIDADP11

- Industrial Control Equipment (UL 61010-2-201 and CSA C22.2 N° 61010-2-201) and for use in Class I Division 2 hazardous (classified) locations (ANSI/ISA 12.12.01 and CSA22.2 N°213). Refer to product markings.

Compliance Standards

Schneider Electric tested this product for compliance with the following compulsory standards:

- United States:
  - Federal Communications Commission, FCC Part 15, Class A
- Europe: CE
  - 2014/35/EU Low Voltage Directive, based on IEC 62368-1 or IEC 61010-2-201
  - 2014/30/EU EMC Directive, class A, based on IEC 61000-6-2 and IEC 61000-6-4
- Australia: RCM
  - Standard AS/NZS CISPR11

Qualification Standards

Schneider Electric voluntarily tested this product to additional standards. The additional tests performed, and the standards under which the tests were conducted, are identified in the environmental characteristics.

Hazardous Substances

This product is compliant with:

- WEEE, Directive 2012/19/EU
- RoHS, Directive 2011/65/EU and 2015/863/EU
- RoHS China, Standard GB/T 26572
- REACH regulation EC 1907/2006

NOTE: Documentation about sustainable development is available on Schneider Electric website (Product Environmental Profile and End of Life Instruction, RoHS, and REACH certificates).

End of Life (Waste Electrical and Electronic Equipment)

The product contains electronic boards. It must be disposed of in specific treatment channels. The product contains cells and/or storage batteries which must be collected and processed separately, when they have run out and at the end of product life (Directive 2012/19/EU).

Refer to the section Maintenance to extract cells and batteries from the product. These batteries do not contain a weight percentage of heavy metals over the threshold notified by European Directive 2006/66/CE.

European (CE) Compliance

The products described in this manual comply with the European Directives concerning Electromagnetic Compatibility and Low Voltage (CE marking) when used as specified in the relevant documentation, in applications for which they are intended, and in connection with approved third-party products.

Hazardous Location Installations - For USA and Canada

General

DANGER

HAZARD OF ELECTRIC SHOCK, EXPLOSION OR ARC FLASH

- Remove all power from the device before removing any covers or elements of the system, and prior to installing or removing any accessories, hardware, or cables.
- Unplug the power cable from both the Harmony Industrial PC and the power supply.
- Always use a properly rated voltage sensing device to confirm that power is off.
- Replace and secure all covers or elements of the system before applying power to the unit.
- Use only the specified voltage when operating the Harmony Industrial PC. The AC unit is designed to use 100...240 Vac input. The DC unit is designed to use 24 Vdc input. Always check whether your device is AC or DC powered before applying power.

Failure to follow these instructions will result in death or serious injury.

While the HMIBMP, HMIBMU, HMIBMO, HMIPCCP2B, HMIPCCU2B, HMIPCCL2B1...4, HMIPCCL2D1...4, HMIPCCL2J1...4, HMIPCCL261...4, HMIPCCL271...4, HMIPCCU26, HMIPCCU27, HMIPCCU2D, HMIPCCU2J, HMIPCCP26, HMIPCCP27, HMIPCCP2D, HMIPCCP2J are certified for use in Class I Division 2 hazardous (classified) locations, they should never be used within a Division 1 (normaly hazardous) location.

Division 2 locations are those locations where ignitable concentrations of flammable substances are normally confined, prevented by ventilation, or present in an adjacent Class I, Division 1 location, but where an abnormal situation might result in intermittent exposure to such ignitable concentrations.

This equipment is suitable for use in Class I, Division 2, Groups A, B, C, and D hazardous locations or in non-hazardous locations. Before installing or using your Box iPC HMIBMP, HMIBMU, HMIBMO, HMIPCCP2B, HMIPCCU2B, HMIPCCL2B1...4, HMIPCCL2D1...4, HMIPCCL2J1...4, HMIPCCL261...4, HMIPCCL271...4, HMIPCCU26, HMIPCCU27, HMIPCCU2D, HMIPCCU2J, HMIPCCP26, HMIPCCP27, HMIPCCP2D, HMIPCCP2J and the display HMIDM6421, HMIDM6521, HMIDM7421, HMIDM7521, confirm that the ANSI/ISA 12.12.01 or CSA C22.2 N°213 certification appears on the product labeling.

⚠ WARNING

EXPLOSION HAZARD

- Do not use your Harmony Industrial PC in hazardous environments or locations other than Class I, Division 2, Groups A, B, C, and D.
- Always confirm that your Harmony Industrial PC is suitable for use in hazardous locations by checking that the ANSI/ISA 12.12.01 or CSA C22.2 N°213 certification appears on the product labeling.
- Do not install any Schneider Electric or OEM components, equipment, or accessories unless these have also been qualified as suitable for use in Class I, Division 2, Groups A, B, C, and D locations.
- In addition, confirm that any PCI controller cards have an adequate temperature code (T-code), and are suitable for a surrounding air temperature range of 0 to 50 °C (32 to 122 °F).
- Do not attempt to install, operate, modify, maintain, service, or otherwise alter the Harmony Industrial PC except as permitted in this manual. Non-permitted actions may impair the unit's suitability for Class I, Division 2 operation.

Failure to follow these instructions can result in death, serious injury, or equipment damage.

⚠ WARNING

EXPLOSION HAZARD

- Always confirm the ANSI/ISA 12.12.01 and CSA C22.2 N°213 hazardous location rating of your device before installing or using it in a hazardous location.
- To power on or power off a Harmony Industrial PC installed in a Class I, Division 2 hazardous location, you must either:
  - Use a switch located outside the hazardous environment, or
  - Use a switch certified for Class I, Division 1 operation inside the hazardous area.
- Substitution of any components may impair suitability for Class I, Division 2.
- Do not connect or disconnect equipment unless power has been switched off or the area is known to be non-hazardous. This applies to all connections including power, ground, serial, parallel, network, and rear USB connections.
- Never use unshielded / ungrounded cables in hazardous locations.
- When enclosed, keep enclosure doors and openings closed at all times to avoid the accumulation of foreign matter inside the workstation.
- Do not open lid nor use the USB connectors in hazardous locations.
- Do not expose to direct sunlight or UV light source.

Failure to follow these instructions can result in death, serious injury, or equipment damage.

Ensure that the product is properly rated for the location. If the intended location does not presently have a Class, Division and Group rating, then users should consult the appropriate authorities having jurisdiction in order to determine the correct rating for that hazardous location.

In accordance with Federal, State/Provincial, and Local regulations, all hazardous location installations should be inspected prior to use by the appropriate authority having jurisdiction. Only technically qualified personnel should install, service, and inspect these systems.

Power Switch

DANGER

HAZARD OF ELECTRIC SHOCK, EXPLOSION OR ARC FLASH

- Remove all power from the device before removing any covers or elements of the system, and prior to installing or removing any accessories, hardware, or cables.
- Unplug the power cable from both the Harmony Industrial PC and the power supply.
- Always use a properly rated voltage sensing device to confirm that power is off.
- Replace and secure all covers or elements of the system before applying power to the unit.
- Use only the specified voltage when operating the Harmony Industrial PC. The AC unit is designed to use 100...240 Vac input. The DC unit is designed to use 24 Vdc input. Always check whether your device is AC or DC powered before applying power.

Failure to follow these instructions will result in death or serious injury.

The amount of input power required by systems with a Box iPC classifies the power switch as an incendive device because the voltage and current across the make/break component are capable of generating a spark.

If using an ordinary power switch, hazardous location regulations require the power switch be located in an area specified as non-hazardous.

However, limits in cable length between the workstation and the power switch may apply. Otherwise the switch must be compliant with Class I, Division 1 requirements (intrinsically safe). These switches are built in a manner that prevents the possibility of a spark when contact is made or broken.

Use suitable UL listed and/or CSA Certified Class I, Division 1 switches in hazardous locations. These switches are available from a wide number of sources. It is your responsibility to ensure that you select a power switch that conforms to the hazardous location rating for the installation.

Cable Connections

⚠ WARNING

EXPLOSION HAZARD

- Always confirm the ANSI/ISA 12.12.01 and CSA C22.2 N°213 hazardous location rating of your device before installing or using it in a hazardous location.
- To power on or power off a Harmony Industrial PC installed in a Class I, Division 2 hazardous location, you must either:
  - Use a switch located outside the hazardous environment, or
  - Use a switch certified for Class I, Division 1 operation inside the hazardous area.
- Substitution of any components may impair suitability for Class I, Division 2.
- Do not connect or disconnect equipment unless power has been switched off or the area is known to be non-hazardous. This applies to all connections including power, ground, serial, parallel, network, and rear USB connections.
- Never use unshielded / ungrounded cables in hazardous locations.
- When enclosed, keep enclosure doors and openings closed at all times to avoid the accumulation of foreign matter inside the workstation.
- Do not open lid nor use the USB connectors in hazardous locations.
- Do not expose to direct sunlight or UV light source.

Failure to follow these instructions can result in death, serious injury, or equipment damage.

Division 2 hazardous location regulations require that all cable connections be provided with adequate strain relief and positive interlock. Use only non-incendive USB devices as USB connections do not provide adequate strain relief to allow the use of Box iPC USB connections. Never connect or disconnect a cable while power is applied at either end of the cable. All communication cables should include a chassis ground shield. This shield should include both copper braid and aluminum foil. The D-Sub style connector housing must be a metal conductive type (for example, molded zinc) and the ground shield braid must be terminated directly to the connector housing. Do not use a shield drain wire.

The outer diameter of the cable must be suited to the inner diameter of the cable connector strain relief so that a reliable degree of strain relief is maintained. Always secure the D-Sub connectors to the workstation-mating connectors via the two screws located on both sides.

Operation and Maintenance

The systems have been designed for compliance with relevant spark ignition tests for the front USB connection only.

⚠ WARNING

EXPLOSION HAZARD

In addition to the other instructions in this manual, observe the following rules when installing the Harmony Industrial PC in a hazardous location:

- Wire the equipment in accordance with the National Electrical Code article 501.10 (B) for Class I, Division 2 hazardous locations.
- Install the Harmony Industrial PC in an enclosure suitable for the specific application, which can only be opened by using a tool-secured enclosure. Type 4 or IP65 enclosures are recommended even when not required by regulations.

Failure to follow these instructions can result in death, serious injury, or equipment damage.

NOTE: IP65 is not part of UL certification for hazardous locations.

Chapter 2
Physical Overview

Subject of this Chapter

This chapter provides a physical overview of the Harmony Box iPC.

What Is in This Chapter?

This chapter contains the following topics:

Topic	Page
Package Contents	38
Box iPC Basic Optimized (HMIBMI) Description	43
Box iPC Optimized (HMIBMO) Description	47
Box iPC Universal and Performance (HMIBMU/HMIBMP) Description	53
Displays Description	59
Display Adapter Description and Configuration	63
Displays and Touch Behavior	69

Package Contents

Items of The Harmony Box iPC

The following items are included in the package of the Harmony Box iPC. Before using the Box iPC, confirm that the items listed here are present:

Box iPC	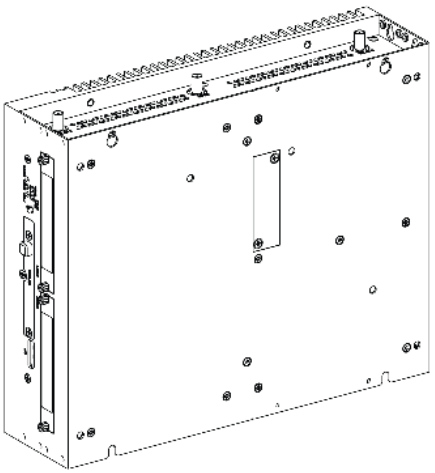
• Recovery media containing the software required to reinstall the operating system (Microsoft Windows EULA). Additional drivers are in the recovery media • Chinese user manual • **“Before using this product”** flyer • Chinese RoHS flyer	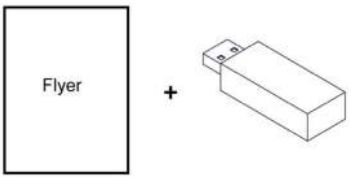
• 1 x DC terminal block: 3-pin power connector • 1 x wire for chassis ground • 8 x screws for mounting the HDD/SSD for HMIBMU and HMIBMP (not included when 2 x HDD/SSD pre-mounted, 4 x screws when 1 x HDD/SSD pre-mounted) • 4 x black screws for mounting the display (not included when the display is delivered pre-mounted on Box iPC).	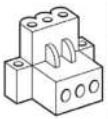

Flexible USB holder for HMIBMU and HMIBMP: ● 4 x metal cable tie ● 4 x screws ● 4 x plastic cable tie	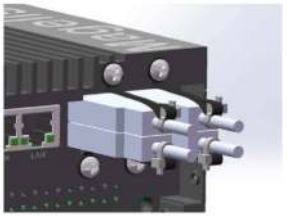
Flexible USB holder for HMIBMO and HMIBMI: 2 x plastic cable tie and plastic cable clip	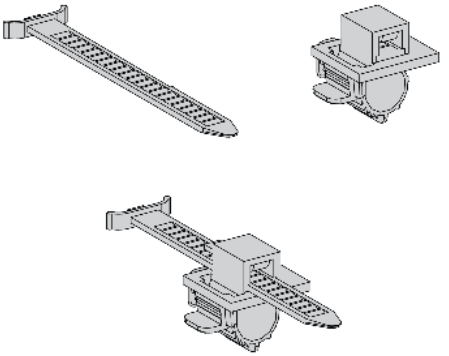

The Box iPC has been carefully packed, with special attention to quality. However, should you find anything damaged or missing, contact your customer support immediately.

Items of The Display

The following items are included in the package of the display. Before using the display, confirm that the items listed here are present:

Display	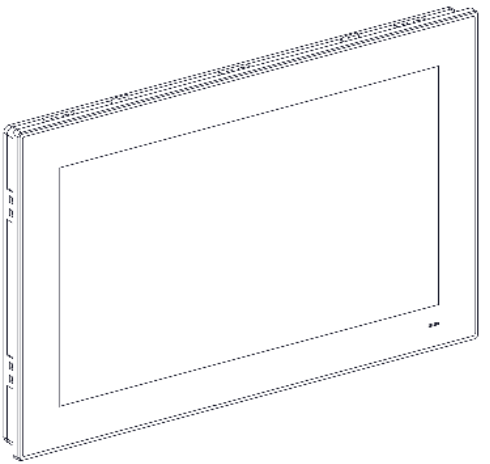
● 8 x installation fasteners for display 4:3 12” and W12” (8 x screws, 8 x brackets) ● 10 x installation fasteners for display 4:3 15” and W15” (10 x screws, 10 x brackets) ● 12 x installation fasteners for display W19” and W22” (12 x screws, 12 x brackets) ● 1 x panel gasket	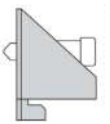
● **“Before using this product”** flyer ● Chinese RoHS flyer	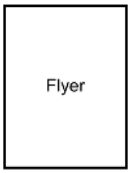

The display has been carefully packed, with special attention to quality. However, should you find anything damaged or missing, contact your customer support immediately.

Items of The Display Adapter

The following items are included in the package of the Display Adapter. Before using the Display Adapter, confirm that the items listed here are present:

Display Adapter	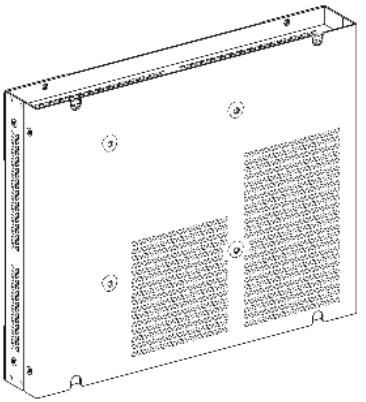
● The media containing the drivers and the user manual to setup the Display Adapter ● Chinese user manual ● **“Before using this product”** flyer ● Chinese RoHS flyer	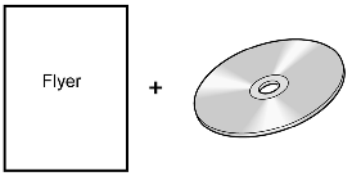

• 1 x DC terminal block: 3-pin power connector • 1 x wire for chassis ground • 4 x black screws for display mounting (not included when display pre-mounted) • 4 x screws for VESA mounting • 1 x plastic cable tie and plastic cable clip for USB holder	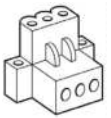 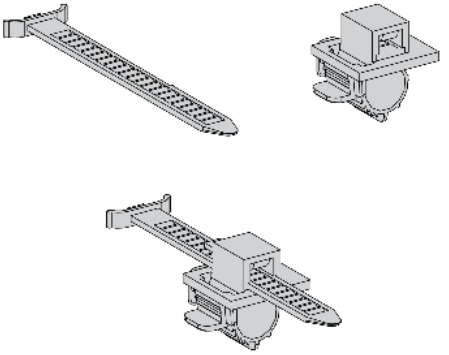

The Display Adapter has been carefully packed, with special attention to quality. However, should you find anything damaged or missing, contact your customer support immediately.

Box iPC Basic Optimized (HMIBMI) Description

Introduction

During operation, the surface temperature of the heat sink may exceed 70 °C (158 °F).

⚠ WARNING
RISK OF BURNS Do not touch the surface of the heat sink during operation. **Failure to follow these instructions can result in death, serious injury, or equipment damage.**

Box iPC Description

Overview

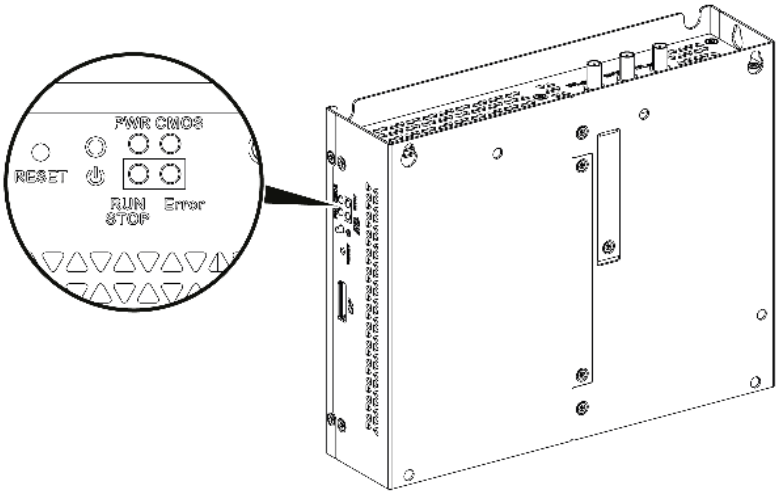

Power ON/OFF button, reset button and LEDs

Meaning of status indicators:

Marking	LED	Color	State	Meaning
PWR	Power	Green	On	Active (user operates Windows) (State 0).
		Green	Flashing	Sleep (State 3).
		Orange	On	Hibernate (State 4/State 5).
CMOS	Battery	Orange	On	RTC voltage < 2.65 Vdc.
			Off	RTC voltage > 2.65 Vdc.
Programmable LED for optional control software				
RUN/STOP	RUN/STOP from control software	Red	Off	Stop
		Green	On	Run
Error	Error from control software	Red	Off	Control software has no error.
			On	Control software has an error.

Front View

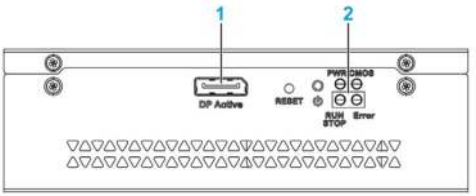

1 DP active
2 LEDs and power/reset button

Top View

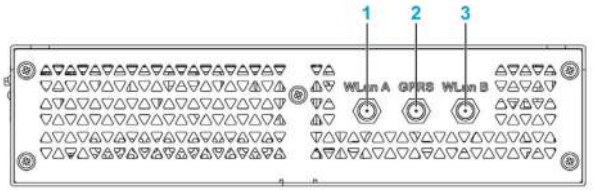

1 SMA connector for the WLan A external antenna
2 SMA connector for the GPRS/4G external antenna
3 SMA connector for the WLan B external antenna

Bottom View

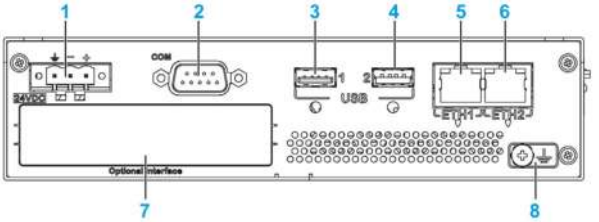

1 DC power connector
2 COM port RS-232 (non-isolated), RS-422/485 (non-isolated)
3 USB1 (USB 2.0)
4 USB2 (USB 3.0)
5 ETH1 (10/100/1000 Mb/s)
6 ETH2 (10/100/1000 Mb/s)
7 Optional interface
8 Ground connection pin

USB Locker

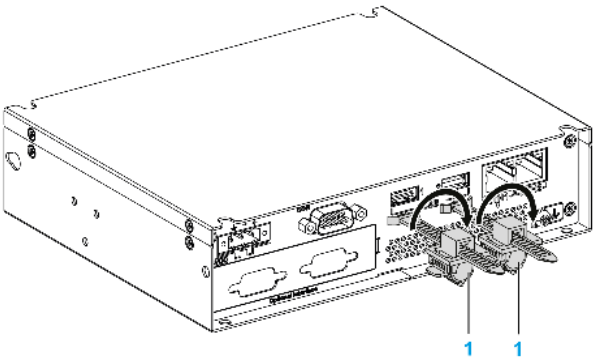

1 USB locker

Box iPC and Display Description

Overview

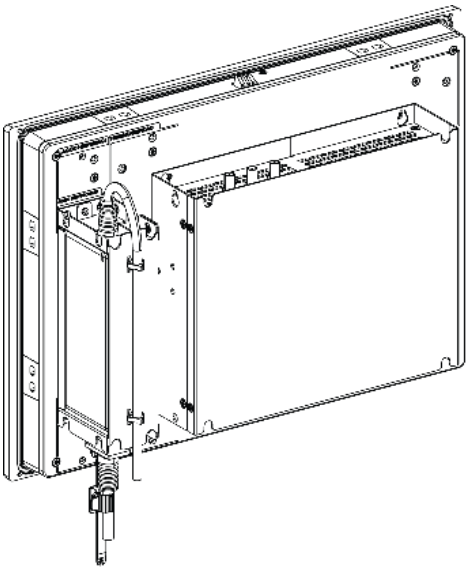

NOTE:

- Windows setting (with drivers already installed): The Box iPC can support DisplayPort at the same time when mounted with a display (HMIDM).
- After DisplayPort cable is plugged, Operating System must be reboot.
- For connecting the Box iPC on display with DVI interface, use an active DP to DVI cable: HMIYADDPDVI11 (see in Accessories *(see page 461)*).

Bottom View

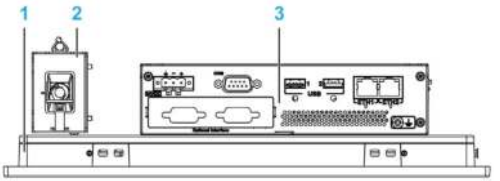

1 Display
2 Optional AC power supply module (HMIYPSOMAC1 or HMIYMMAC1)
3 Box iPC

Box iPC Optimized (HMIBMO) Description

Introduction

During operation, the surface temperature of the heat sink may exceed 70 °C (158 °F).

⚠ WARNING
RISK OF BURNS Do not touch the surface of the heat sink during operation. **Failure to follow these instructions can result in death, serious injury, or equipment damage.**

Box iPC Optimized Regular Description

Overview

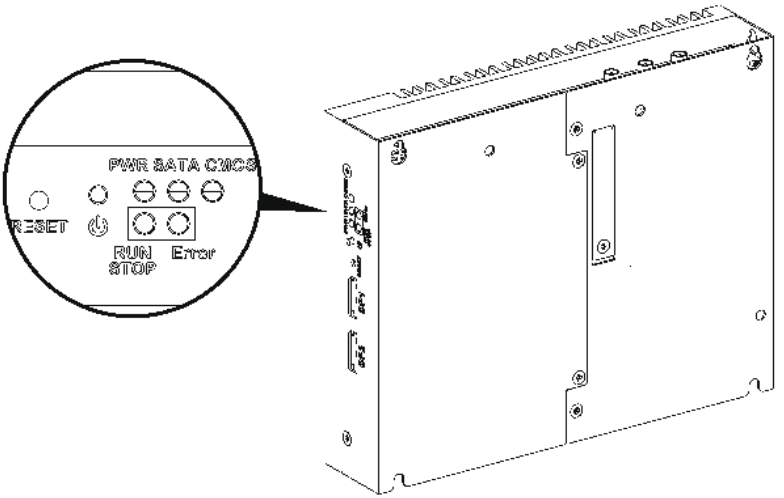

Power ON/OFF button, reset button, and LEDs

The table describes the meaning of the status indicators:

Marking	LED	Color	State	Meaning
PWR	Power	Green	On	Active (user operates Windows) (State 0).
		Green	Flashing	Sleep (State 3).
		Orange	On	Hibernate (State 4/State 5).
SATA	SATA	Green	Off	No storage data transmission.
			On	Storage data transmission.
CMOS	Battery	Orange	On	RTC voltage < 2.65 Vdc.
			Off	RTC voltage > 2.65 Vdc.
Programmable LED for optional control software				
RUN/STOP	RUN/STOP from control software	Red	Off	Stop
		Green	On	Run
Error	Error from control software	Red	Off	Control software has no error.
			On	Control software has an error.

Front View

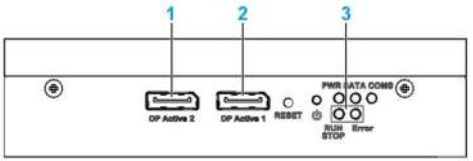

1 DP active 2
2 DP active 1
3 LEDs and power/reset button

Top View

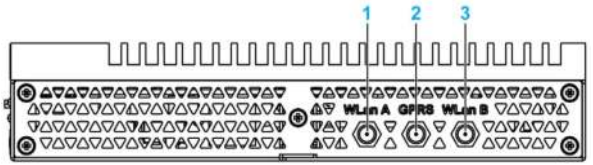

1 SMA connector for the WLan A external antenna
2 SMA connector for the GPRS/4G external antenna
3 SMA connector for the WLan B external antenna

Bottom View

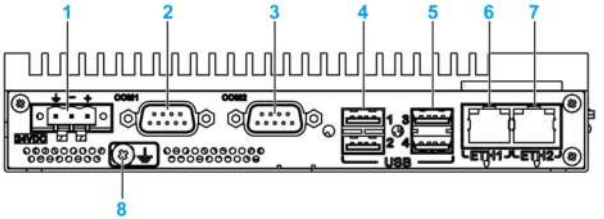

1 DC power connector
2 COM1 port RS-232 (non-isolated)
3 COM2 port RS-232 (non-isolated), RS-422/485 (non-isolated)
4 USB1 and USB2 (USB 2.0)
5 USB3 and USB4 (USB 3.0)
6 ETH1 (10/100/1000 Mb/s) IEEE1588
7 ETH2 (10/100/1000 Mb/s) IEEE1588
8 Ground connection pin

Box iPC Optimized Expandable Description

Overview

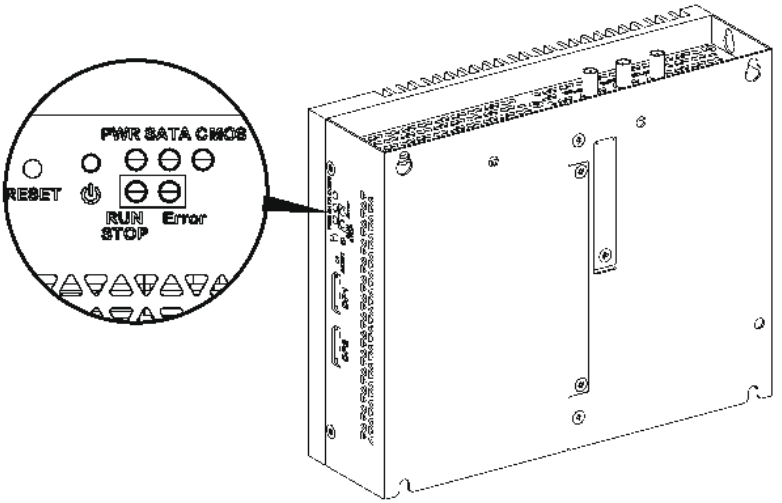

Power ON/OFF button, reset button, and LEDs

The table describes the meaning of the status indicators:

Marking	LED	Color	State	Meaning
PWR	Power	Green	On	Active (user operates Windows) (State 0).
		Green	Flashing	Sleep (State 3).
		Orange	On	Hibernate (State 4/State 5).
SATA	SATA	Green	Off	No storage data transmission.
			On	Storage data transmission.
CMOS	Battery	Orange	On	RTC voltage < 2.65 Vdc.
			Off	RTC voltage > 2.65 Vdc.
Programmable LED for optional control software				
RUN/STOP	RUN/STOP from control software	Red	Off	Stop
		Green	On	Run
ERR	Error from control software	Red	Off	Control software has no error.
			On	Control software has an error.

Front View

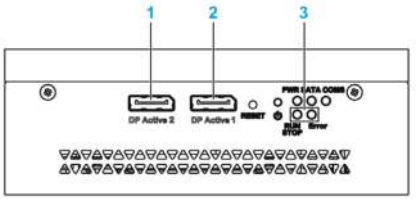

1 DP active 2
2 DP active 1
3 LEDs and power/reset button

Top View

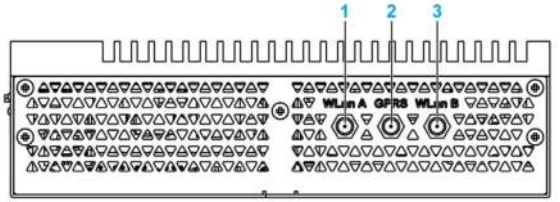

1 SMA connector for the WLan A external antenna
2 SMA connector for the GPRS/4G external antenna
3 SMA connector for the WLan B external antenna

Bottom View

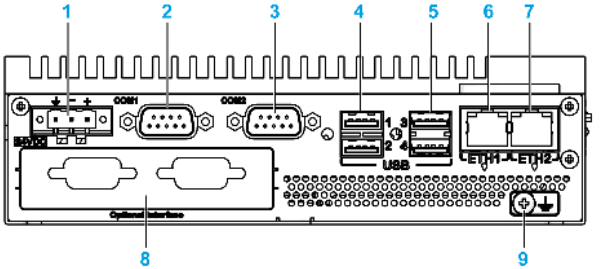

1 DC power connector
2 COM1 port RS-232 (non-isolated)
3 COM2 port RS-232 (non-isolated), RS-422/485 (non-isolated)
4 USB1 and USB2 (USB 2.0)
5 USB3 and USB4 (USB 3.0)
6 ETH1 (10/100/1000 Mb/s) IEEE1588
7 ETH2 (10/100/1000 Mb/s) IEEE1588
8 Optional interface
9 Ground connection pin

Box iPC Optimized and Display Description

Overview

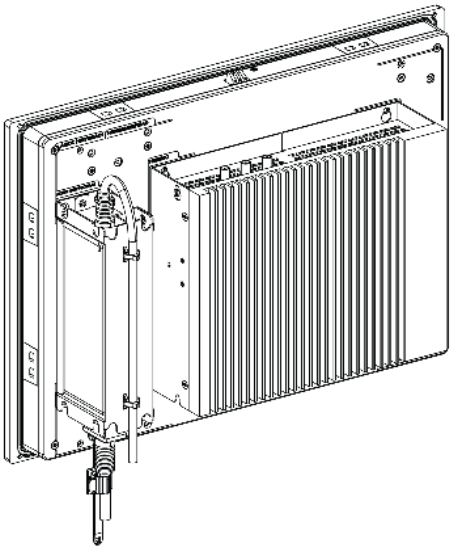

NOTE:

- Windows setting (with drivers already installed): The Box iPC Optimized can support two DisplayPort at the same time when mounted with a display (HMIDM).
- After DisplayPort cable is plugged, Operating System must be reboot.
- For connecting the Box iPC on display with DVI interface, use an active DP to DVI cable: HMIYADDPDVI11 (see in Accessories).

Bottom View

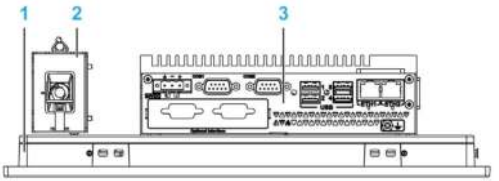

1 Display
2 Optional AC power supply module (HMIYPSOMAC1 or HMIYMMAC1)
3 Box iPC

Box iPC Universal and Performance (HMIBMU/HMIBMP) Description

Introduction

During operation, the surface temperature of the heat sink may exceed 70 °C (158 °F).

⚠ WARNING
RISK OF BURNS Do not touch the surface of the heat sink during operation. **Failure to follow these instructions can result in death, serious injury, or equipment damage.**

Box iPC 2-Slot Description

Overview

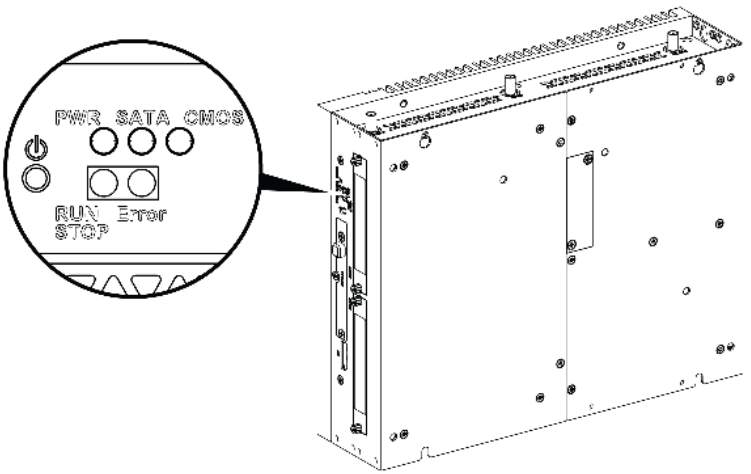

Power ON/OFF button and LEDs

The table describes the meaning of the status indicators:

Marking	LED	Color	State	Meaning
PWR	Power	Green	On	Active (user operates Windows) (State 0).
		Green	Flashing	Sleep (State 3).
		Orange	On	Hibernate (State 4/State 5).
SATA	SATA	Green	Off	No storage data transmission.
			On	Storage data transmission.

Marking	LED	Color	State	Meaning
CMOS	Battery	Orange	On	RTC voltage < 2.65 Vdc.
			Off	RTC voltage > 2.65 Vdc.
Programmable LED for optional control software				
RUN/STOP	RUN/STOP from control software	Red	Off	Stop
		Green	On	Run
ERR	Error from control software	Red	Off	Control software has no error.
			On	Control software has an error.

Front View

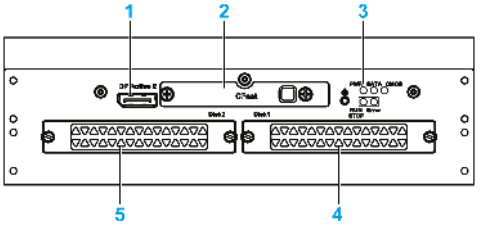

1 DP active 2
2 Slide-in CFast slot
3 LEDs and power/reset button
4 HDD/SSD 1 (hot swap and can be RAID configuration)
5 HDD/SSD 2 (hot swap and can be RAID configuration)

Top View

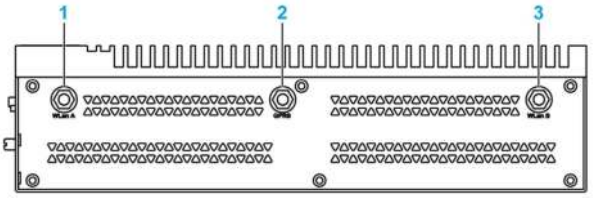

1 SMA connector for the WLan external antenna
2 SMA connector for the GPRS/4G external antenna
3 SMA connector for the WLan external antenna

Bottom View

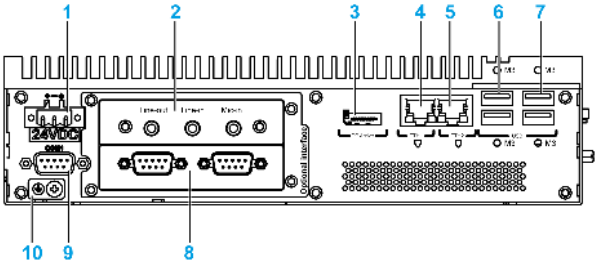

1 DC power connector
2 Optional interface 1
3 DP active 1
4 ETH1 (10/100/1000 Mb/s) IEEE1588
5 ETH2 (10/100/1000 Mb/s) IEEE1588
6 USB1 and USB2 (USB 3.0)
7 USB3 and USB4 (USB 2.0)
8 Optional interface 2
9 COM1 port RS-232, RS-422/485 (isolated)
10 Ground connection pin

Box iPC 4-Slot Description

Overview

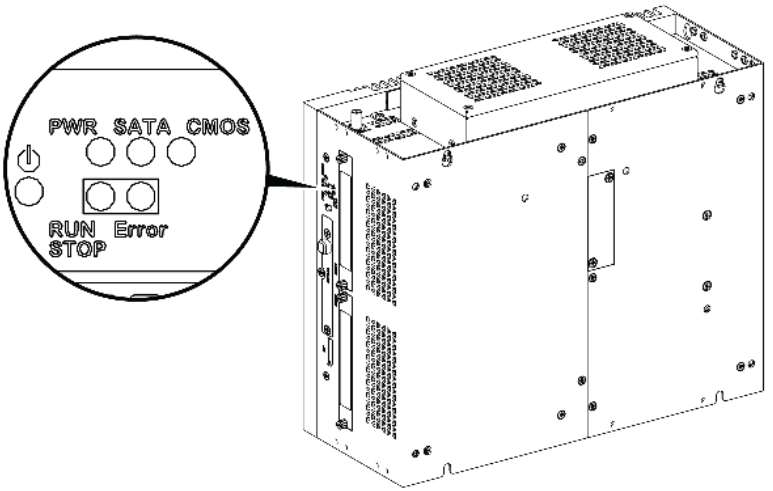

Power ON/OFF button and LEDs

The table describes the meaning of the status indicators:

Marking	LED	Color	State	Meaning
PWR	Power	Green	On	Active (user operates Windows) (State 0).
		Green	Flashing	Sleep (State 3).
		Orange	On	Hibernate (State 4/State 5).
SATA	SATA	Green	Off	No storage data transmission.
			On	Storage data transmission.
CMOS	Battery	Orange	On	RTC voltage < 2.65 Vdc.
			Off	RTC voltage > 2.65 Vdc.
Programmable LED for optional control software				
RUN/STOP	RUN/STOP from control software	Red	Off	Stop
		Green	On	Run
ERR	Error from control software	Red	Off	Control software has no error.
			On	Control software has an error.

Front View

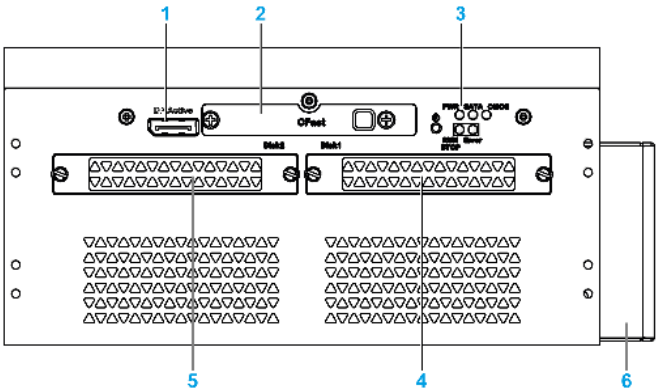

1 DP active 2
2 Slide-in CFast slot
3 LEDs and power/reset button
4 HDD/SSD 1 (hot swap and can be RAID configuration)
5 HDD/SSD 2 (hot swap and can be RAID configuration)
6 Fan

Top View

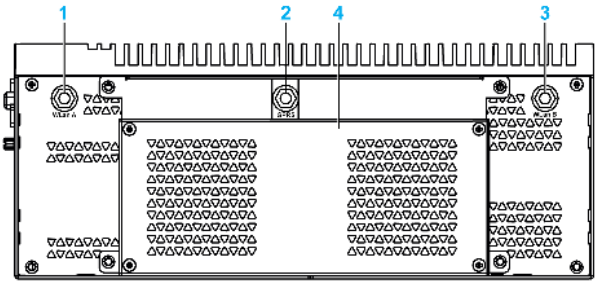

1 SMA connector for the WLan external antenna
2 SMA connector for the GPRS/4G external antenna
3 SMA connector for the WLan external antenna
4 Fan

Bottom View

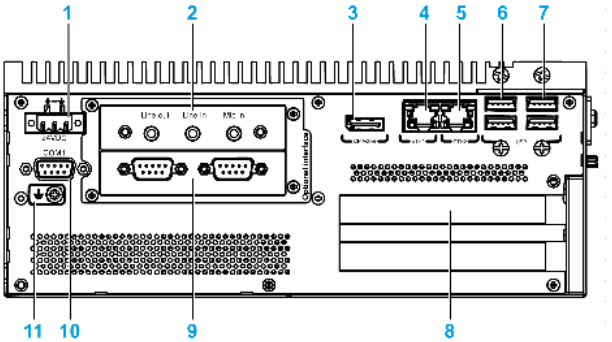

1 DC power connector
2 Optional interface 1
3 DP active 1
4 ETH1 (10/100/1000 Mb/s) IEEE1588
5 ETH2 (10/100/1000 Mb/s) IEEE1588
6 USB1 and USB2 (USB 3.0)
7 USB3 and USB4 (USB 2.0)
8 PCI or PCIe (peripheral component interconnect express) slots
9 Optional interface 2
10 COM1 port RS-232, RS-422/485 (isolated)
11 Ground connection pin

Box iPC and Display Description

Overview

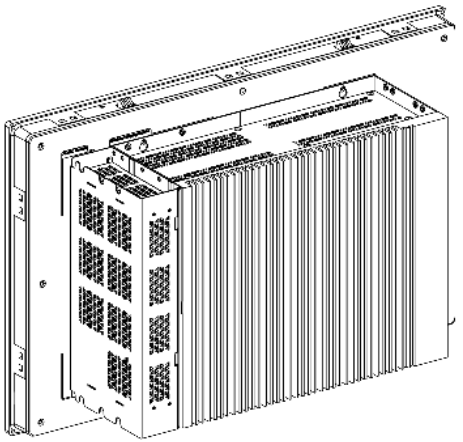

NOTE:

- The Box iPC (HMIBMU/HMIBMP) can support two DisplayPort. When the Box iPC is mounted with the display, the DisplayPort 2 is not functional.
- After DisplayPort cable is connected, Operating System must be rebooted.
- For connecting the Box iPC to a display with DVI interface, use an active DP to DVI cable: HMIYADDPDVI11 (see in Accessories).

Bottom View

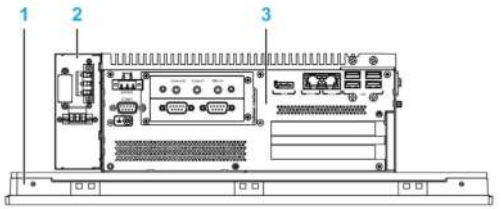

1 Display
2 Optional AC power supply module (HMIYMMAC1)
3 Box iPC

Displays Description

Front View Displays 4:3 12” or 4:3 15”

The display 4:3 12” and 4:3 15” have a touch screen with analog-resistive touch technology that may operate abnormally when two or more points are touched.

⚠ WARNING

UNINTENDED EQUIPMENT OPERATION

Do not touch two or more points on display.

Failure to follow these instructions can result in death, serious injury, or equipment damage.

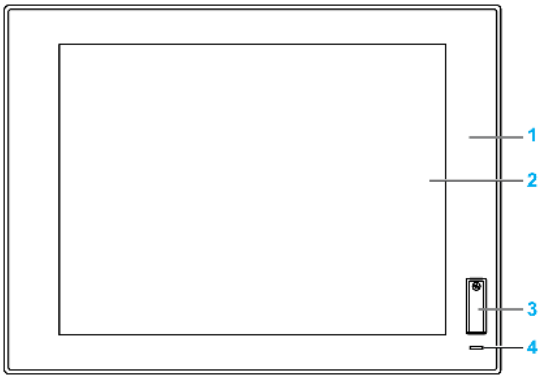

1 Panel (4:3 12” or 4:3 15”)
2 Single-touch panel
3 USB port (USB 2.0) and reset button
4 Status indicator

NOTE: If the display is connected with a Display Adapter, the reset button is only for the Display Adapter reset. If the display is connected with a Box iPC, the reset button is for the Box iPC reset.

NOTE: The front USB is a diagnostic interface for service and maintenance.

⚠ WARNING

UNINTENDED EQUIPMENT OPERATION

- Do not use the front USB while the machine is in operation.
- Always keep the cover in place during normal operation.

Failure to follow these instructions can result in death, serious injury, or equipment damage.

Front View Displays W12”, W15”, W19” or W22”

The display W12”, W15”, W19” and W22” multi-touch have a touch screen with projected capacitive touch technology that may operate abnormally when the surface is wet.

⚠ WARNING

LOSS OF CONTROL

- Do not touch the touch screen area during Operating System startup.
- Do not operate when the touch screen surface is wet.
- If the touch screen surface is wet, remove any excessive water with a soft cloth before operation.
- Make sure to use only the authorized grounding configurations shown in the grounding procedure.

Failure to follow these instructions can result in death, serious injury, or equipment damage.

NOTE:

- If a conductive material (water, etc.) is on a touch screen, touch control is disabled to avoid touch input errors. After the conductive material is removed, the touch control will recover automatically.
- Do not touch the touch screen area during Operating System startup since "touch panel firmware" initializes automatically when Windows starts up.

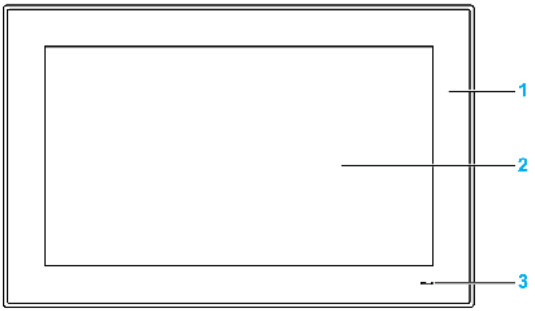

1 Panel (W12” or W15” or W19” or W22”)
2 Multi-touch panel
3 Status indicator

Status Indicator

The table describes the meaning of the status indicator of the Displays with Box iPC:

Color	State	Meaning
Green	On	Active (user operates Windows) (State 0).
Green	Flashing	Sleep (State 1/State 2/State 3).
Orange	On	Hibernate (State 4/State 5).

The table describes the meaning of the status indicator of the Displays with Display Adapter:

Color	State	Meaning
Green	On	Active (user operates Windows) (State 0).
Orange	On	Sleep (State 1/State 2) and hibernate (State 3/State 4/State 5).

Rear View Displays 4:3 15”, W15”, W19” or W22”

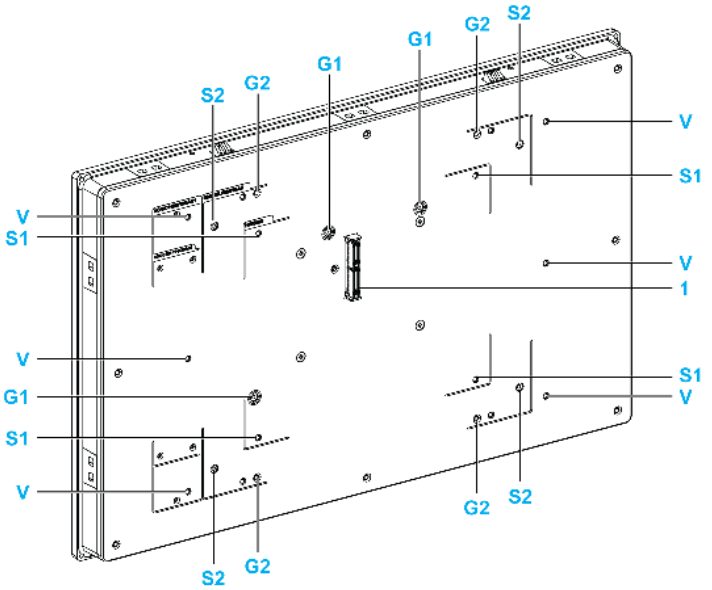

1 Panel connector for the Box iPC or Display Adapter
G1 Removal panel guide for the Box iPC Optimized
S1 Mounting hole for the Box iPC Optimized
G2 Removal panel guide for the Box iPC Universal/Performance or Display Adapter
S2 Mounting hole for the Box iPC Universal/Performance or Display Adapter
V Mounting hole for the VESA (HMIYPVESA21 or HMIYPVESA41) kit

Rear View Displays 4:3 12” or W12”

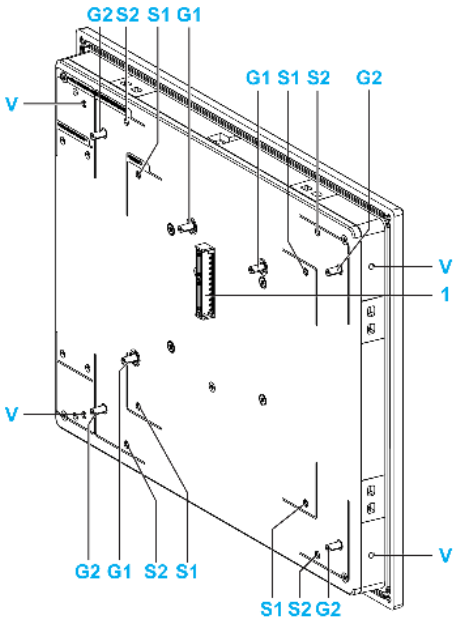

1 Panel connector for the Box iPC or Display Adapter
G1 Removal panel guide for the Box iPC Optimized
S1 Mounting hole for the Box iPC Optimized
G2 Removal panel guide for the Box iPC Universal/Performance or Display Adapter
S2 Mounting hole for the Box iPC Universal/Performance or Display Adapter
V Mounting hole for VESA (HMIYPVESA6X21)

Display Adapter Description and Configuration

Overview

The display can be mounted remotely from the Box iPC, using the Display Adapter.

The Display Adapter can be connected to any PC with USB cable for touch screen and DisplayPort cable for video (HMIYCABUSB51 / HMIYCABDP51 maximum distance of 5 m (16.4 ft)).

When equipped with a Receiver module and Transmitter module, up to 4 Display Adapters can be connected to one Box iPC equipped with Optional Interface for the RJ45 connector for CAT5e/CAT6 Ethernet cable. In this configuration, the single RJ45 connector for CAT5e/CAT6 cable supports both touch screens and video signal for a maximum distance of 100 m between devices, a maximum of 400 m total for 4 displays.

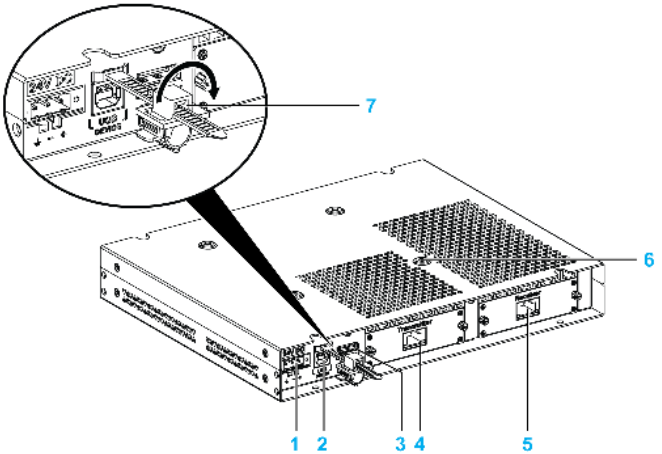

1 DC power supply connection
2 USB port type B (USB 2.0 for touch screen OUT)
3 DisplayPort (IN)
4 Transmitter module (HMIYDATR11) with RJ45 port
5 Receiver module (HMIYDARE11) with RJ45 port
6 Mounting holes for the VESA
7 USB locker

Local Display Configuration with DisplayPort Connection (Maximum Distance: 5 m)

Step	Action
1	Connect the Display Adapter to host PC using DP cable: 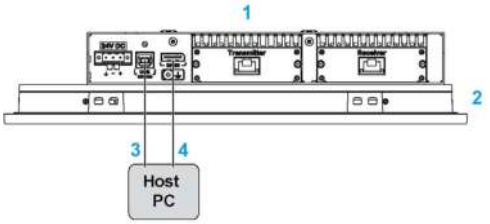 **1** Display Adapter **2** Display **3** USB cable 5 m (HMIYCABUSB51) **4** DP to DP cable 5 m (HMIYCABDP51)
2	Install the touch driver from either the recovery media of box or from the DVD of the Display Adapter.
3	Connect the Display Adapter to a host PC via a USB cable to use **Touch** function.

NOTE:

- The displays W12”, W15”, W19”, and W22” have multi-touch screen.
- The reset button on the display 4:3 12” and 4:3 15” is only for the Display Adapter reset. It cannot reset the host PC.
- The Display Adapter with display does not support brightness control. The brightness is always 100%.
- Once the DisplayPort cable is connected, the Operating System must be rebooted.
- For operation with 100...240 Vac in hazardous location, the AC power supply module (HMIYMMAC1) must be mounted.
- The length of the DP and USB cables is limited up to 5 m (16.40 ft).

Remote Display Configuration with Receiver module and Transmitter module (Maximum Distance: 4 x 100 m)

The Receiver module and Transmitter module can be used to connect multiple displays in a daisy chain manner. The Display Adapters are connected by Ethernet cables (type CAT5e/CAT6) with a maximum distance of 100 meters between two devices.

The Box iPC can support data transfer with four displays that have a Display Adapter, so with a maximum distance up to 4 x 100 m = 400 m (437 yd). The four displays are clone displays.

Follow these steps for display and Display Adapter Installation:

Step	Action
1	Install the mini PCIe card *(see page 278)* and the mini PCIe to Display Adapter Interface *(see page 276)* in the Box iPC.
2	Connect the Display Adapter and all the Transmitter module / Receiver module on remote displays using Ethernet cables (type CAT5e/CAT6): 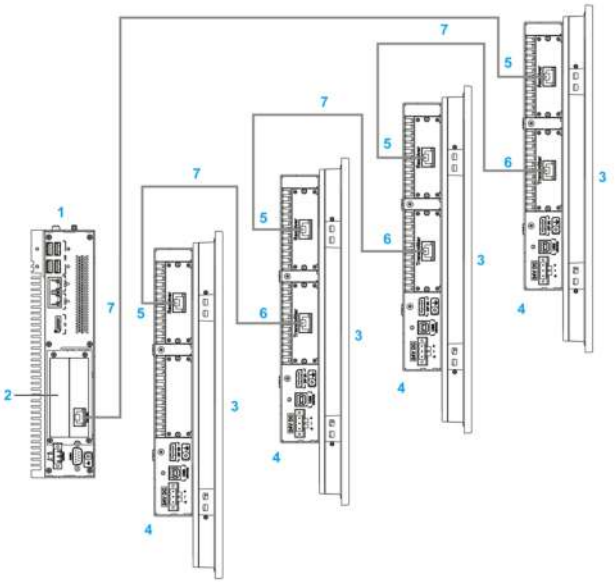 **1** Box iPC **2** mini PCIe to Display Adapter Interface **3** Display **4** Display Adapter **5** Receiver module **6** Transmitter module **7** Ethernet cables (type CAT5e/CAT6) **NOTE:** Connect remote display one by one during installation.

Step	Action
3	Install the driver *(see page 280)* from the recovery USB memory key.
4	Reboot the system to get correct setting.

NOTE:
About remote displays configuration (except resolution settings):

- The length of the Ethernet cable is limited up to 100 m to the next Display Adapter.A maximum of four Display Adapters can be connected via RJ45 on the same PC.
- A maximum one mini PCIe to Display Adapter Interface (HMIYMINDP1), per Box iPC.
- To set up the mini PCIe to Display Adapter Interface (HMIYMINDP1), you need a display or a third-party monitor on host PC to install the driver. Once the remote display configurations are ready, the display on the host PC can be removed if it is not used.
- A driver is required on the PC where the mini PCIe to Display Adapter Interface (HMIYMINDP1) is installed. If the driver is not pre-installed, it is available on the Schneider Electric site.
- When connecting the remote display to the Box iPC, be sure not to connect the cable to the Ethernet port of the Box iPC, but to the RJ45 port on the mini PCIe to Display Adapter Interface.
- The remote display cable does not support the normal LAN HUB or switch because the signal type is different.
- When the Receiver module is connected, the local connection with the host PC using DP and USB cables is disabled and the remote PC screens are displayed. But when the Box iPC interface Receiver module cable is disconnected, it automatically switches to the host PC screen.
- The Display Adapter must be used with a display product version 02 or above.
- The touch panel of the display is single use at a time and need waiting until the finger comes out; then other touch panels can work (waiting time 100 ms).
- **Touch Disable** function on remote displays only supports normal operating state. When the host PC is rebooting, turns off, in **S3** mode (lower power state) or **S4** mode (hibernate state); the USB device is reorganized and its system cannot get which remote touch is in **Touch Disable** mode.
- The reset button on display 4:3 12” and 4:3 15” is only for the Display Adapter reset. It cannot reset the host PC.
- The Display Adapter with display does not support brightness control. The brightness is always 100%.
- With the remote display cable (100 m), the touch-beep sound cannot be heard from the touch-panel side because the buzzer is on the Box iPC side.
- The display only supports the 2D function when the remote Display Adapter is used as the main display.
- When using four Display Adapters, you cannot use the front USB port on the displays (4:3 12” or 4:3 15”).
- With remote display module, the screen rotation is not available with Windows® 7 and Windows® Embedded Standard 7.
- Windows® Media Player is not recommended to play video on remote displays because of mini PCIe interface graphic card performance limitation. VLC player or other professional video application is recommended instead of.

To Manage the Display Resolution in the Remote Display Configuration

Box iPC uses the Extended Display Identification Data (EDID) information, with default setting 1366 x 768 pixel resolution when the mini PCIe interface has been installed. On the first connection, the displays connected via the Transmitter module and the Receiver module display 1366 x 768 pixels whatever the display sizes are:

- The host PC automatically detects the first remote display resolution, during host PC restart, shut-down, **S3** mode (lower power state) or **S4** mode (hibernation state). Make sure that the first remote display is connected and power on. Otherwise the host PC is not able to detect the first remote display resolution and the resolution setting is not remotely correct.
- All remote displays must have same resolution. 4:3 and 16:9 resolutions cannot be mixed on the remote displays.

Default resolution setting:

4:3 12”/4:3 15”	W12”	W15”/W19”	W22”
1024 x 768 pixels	1280 x 800 pixels	1366 x 768 pixels	1920 x 1080 pixels

Display with No Signal Message

When the host PC is turned off, or one of the display of the daisy chain is turned off or disconnected, the next other displays in the daisy chain get **NO SIGNAL** message on their screens. When the **NO SIGNAL** message appears, the remote display has no function (no touch and no display):

This is an informative note to you to check:

- If the Ethernet cables on remote displays are disconnected, check, and reconnect. After one minute, the remote displays resume their normal operation.
- If the host PC gets to **S3** (lower power state) or **S4** mode (power hibernation state), click any screen of the remote display to reactive the PC and resume normal operation.
- If the host PC set the **Turn off the Display** mode in **Power Options → Edit Plan Setting**, click any screen in the remote display to wake up the PC and get back to normal status.

S3 an S4 Mode

You can set the host PC in **S3** or **S4** mode if necessary:

Turn off The Display

Recommend that default setting is **Never** to avoid the remote display from changing to the **NO SIGNAL** message too often and impact the remote display operation:

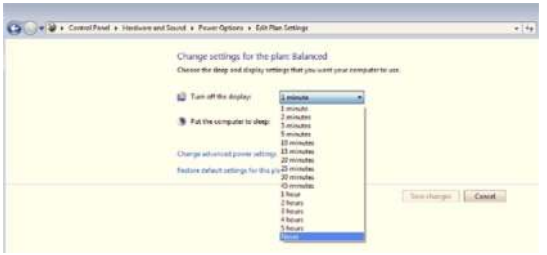

Displays and Touch Behavior

Displays Behavior for HMIBMU/HMIBMP/HMIBMI

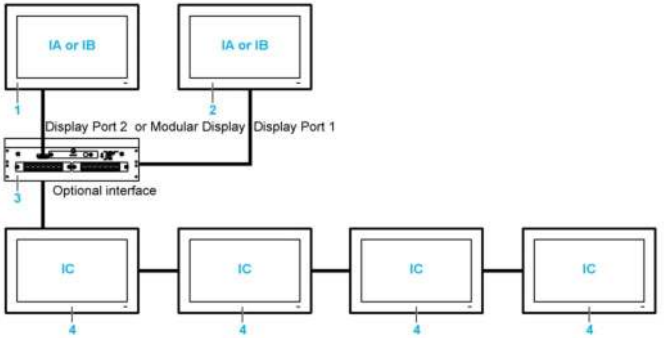

IA, IB, IC Images (with Windows setting)

1 Local displays and Display Adapters
2 Display Adapters
3 Box iPC Universal/Performance/Optimized
4 Remote displays and Display Adapters with Receiver/Transmitter module

NOTE:

- The resolution is defined by the Receiver module or Windows settings.
- The HMIBMI has only one DisplayPort.

Touch Function Behavior for HMIBMU/HMIBMP/HMIBMI

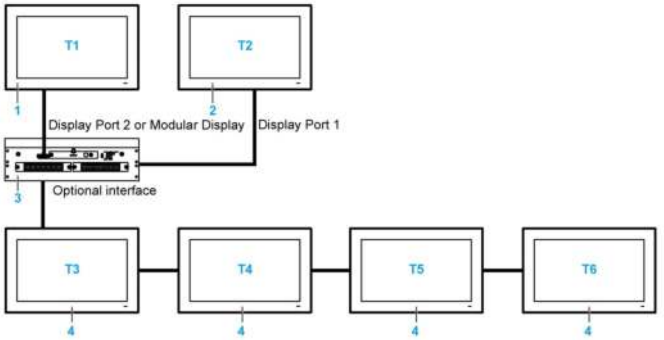

T1, T2, T3, T4, T5, T6 Touch functions

1 Local displays and Display Adapters
2 Display Adapters
3 Box iPC Universal/Performance/Optimized
4 Remote displays and Display Adapters with Receiver/Transmitter module

NOTE: The HMIBMI has only one DisplayPort.

Displays Behavior for HMIBMO

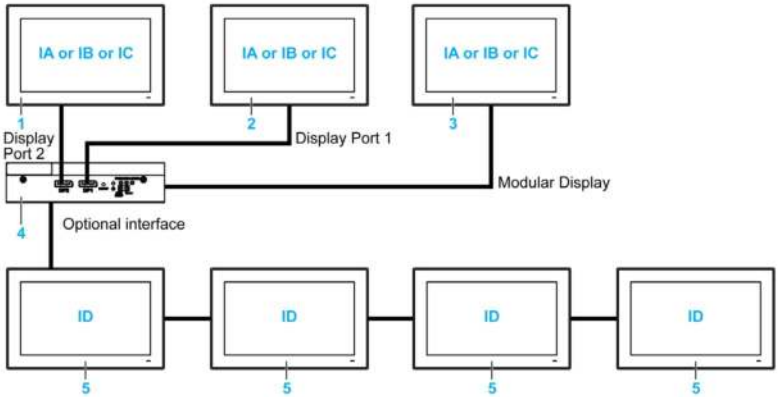

IA, IB, IC, ID Images (with Windows setting)

1 Display Adapters
2 Display Adapters
3 Local displays
4 Box iPC Optimized
5 Remote displays and Display Adapters with Receiver/Transmitter module

NOTE: The resolution is defined by the Receiver module or Windows settings.

Touch Function Behavior for HMIBMO

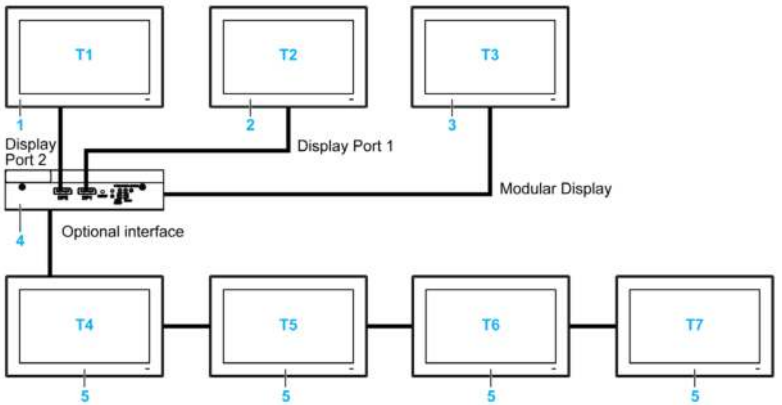

T1, T2, T3, T4, T5, T6, T7 Touch functions

1 Display Adapters
2 Display Adapters
3 Local displays
4 Box iPC Optimized
5 Remote displays and Display Adapters with Receiver/Transmitter module

Graphic Setting

For each display, a software tool is available to enable/disable touch-panel operation. You can disable up to three touch panels to monopolize the touch operation, the display order must match the tool. The exclusive **Touch** function is set to be effective for 100 ms even after a finger leaves the display.

Check that the BIOS Graphic of the Box iPC is set to {IGFX}, as follows:

1. **BIOS → Chipset → System Agent (SA) Configuration**
2. **Graphics configuration**
3. **Primary Display → IGFX**
4. **Save** and exit BIOS

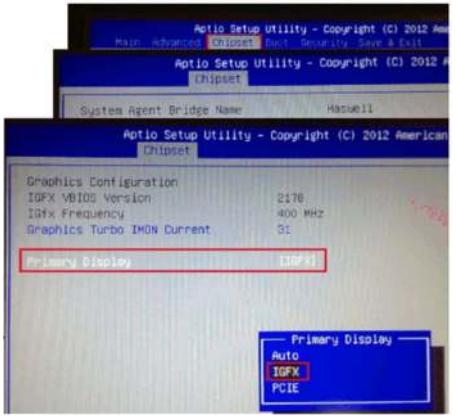

Touch Setting

Step	Action
1	Click the **Search** icon (for example WE8.1). 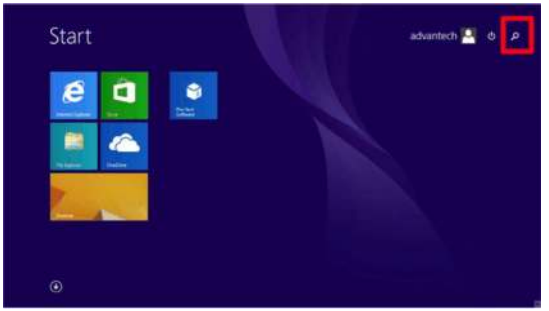 **NOTE:** ● For short distance display, make sure under **extended mode** to do tablet PC for display 2. ● See **extended mode**
2	Type **Tablet** in the **Search** field and select **Tablet PC Settings**. 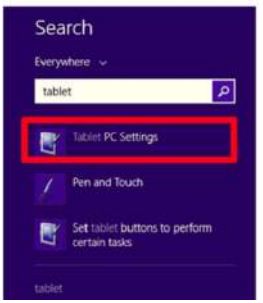

Step	Action
3	Click **Setup**. 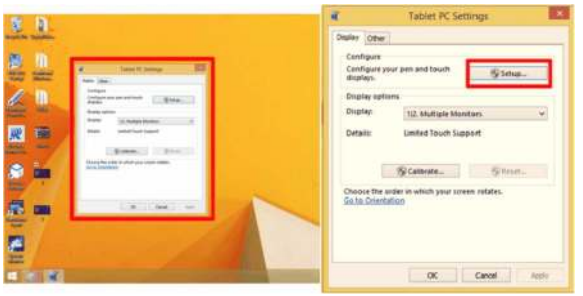
4	Set the two touch screens separately following the instructions shown on the display. 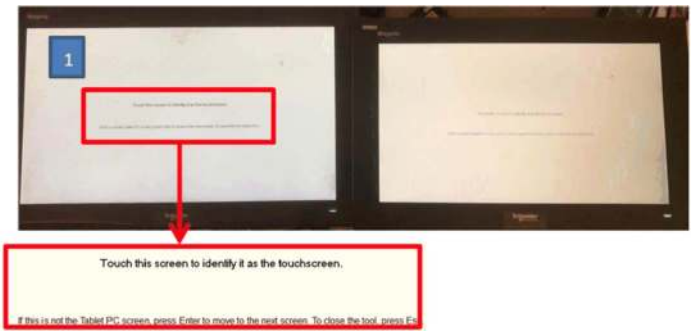
5	Set another touch screen. 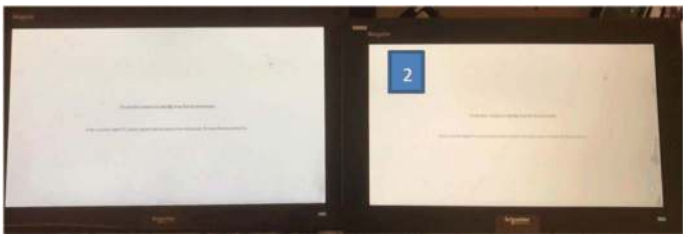
6	Finish

Calibration of Resistive Displays 4:3 12” and 4:3 15”

NOTE:

- You do not need to do calibration, only if the touch is not accurate.
- Make sure to do **Tablet PC Settings**. For details, refer to the Touch Setting *(see page 72)*.
- Open **PenMount Control Panel** from **Task** bar and click **Assign ID** button.
- Check which controller ID is related with which display (by disconnecting cable, and so on,…)

Step	Action
1	Modify the multiple display settings: select the display 2 and select **show only on 2**. 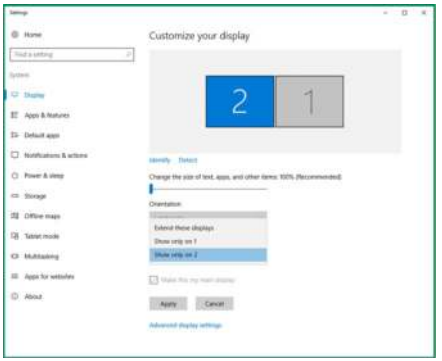
2	Use **PenMount Control Panel** to disable other touch that does need require calibration. 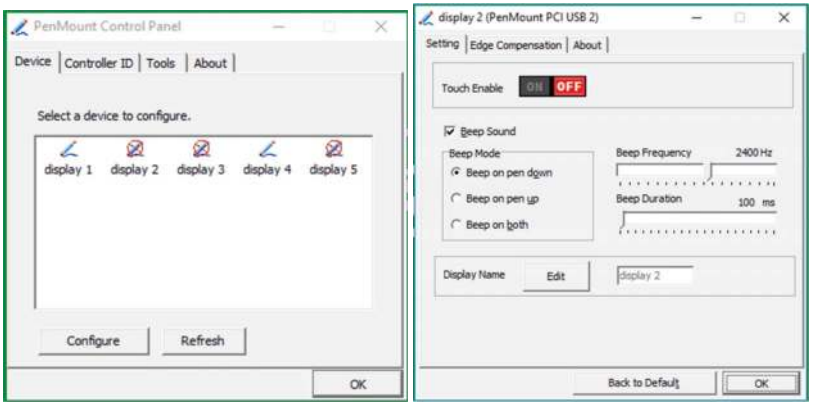

Step	Action
3	Click **Standard Calibration**. 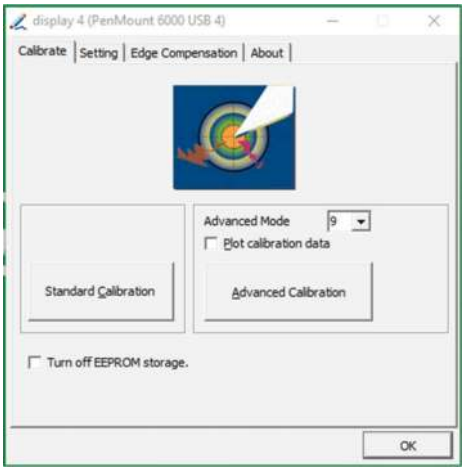
4	Calibration touch screen:
5	Wait for positioning data processing. Final touch and calibration complete:. 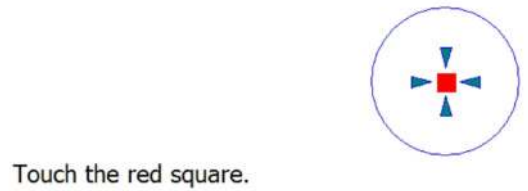 **NOTE:** Repeat step 1...5 if you want to calibrate another displays.

Step	Action
6	Use **PenMount Control Panel** to enable touch. 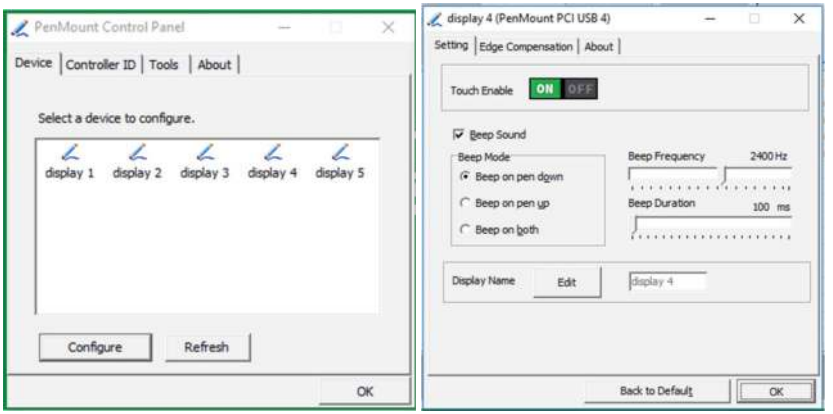
7	Change the multiple display settings: select the display 1 and select **Extend these displays**. 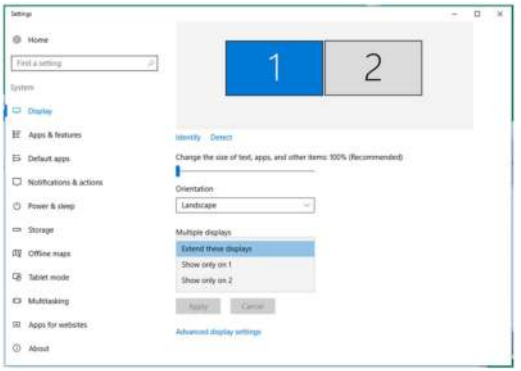

NOTE: The wide capacity displays (W12”, W15”, W19”, W22”) have default calibrations.

PenMount Touch Driver Installation for Third-Party PC

When connecting to a third-party PC, the touch driver must be installed.The driver is already installed on the Harmony Box iPC.

Use this process to install **PenMount driver and Control Panel**. The installation package and utility only have an English version (see the DVD delivered with the Display Adapter).

Step	Action
1	Double-click `Setup.exe` in the **PenMount Windows Universal Driver installation Package** and click **Next** to start.
2	Click **I Agree** to continue. 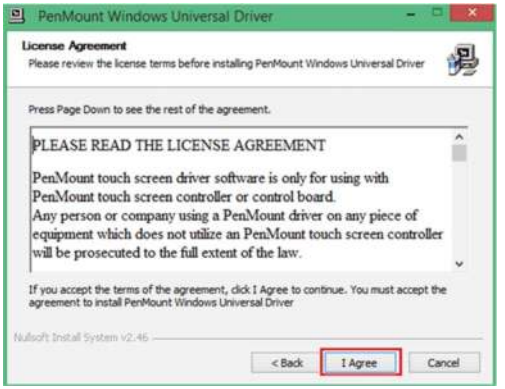

Step	Action
3	Click **Browse…** to select the folder you want to install and click **Install** to continue. 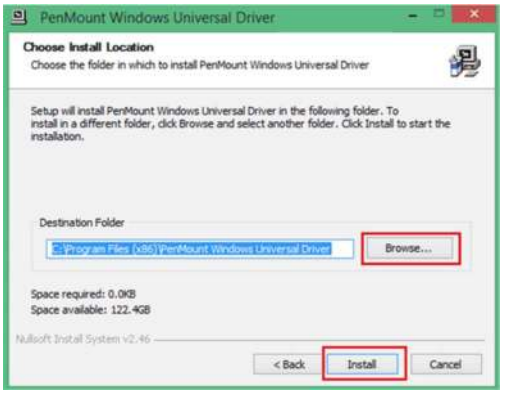 **Result**: Wait until the installation is finished. 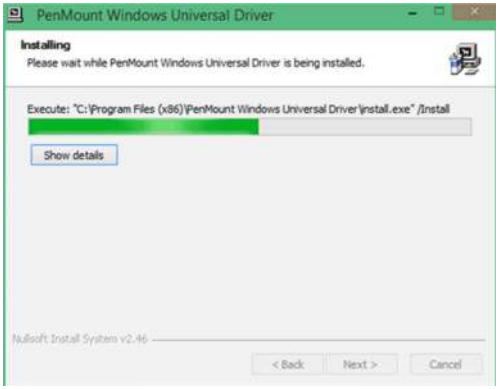

Step	Action
4	Click **Finish** to reboot the system.
5	After reboot, the installation process is finished. Then, you can click **PenMount Control Panel** to adjust the settings of your touch panel. 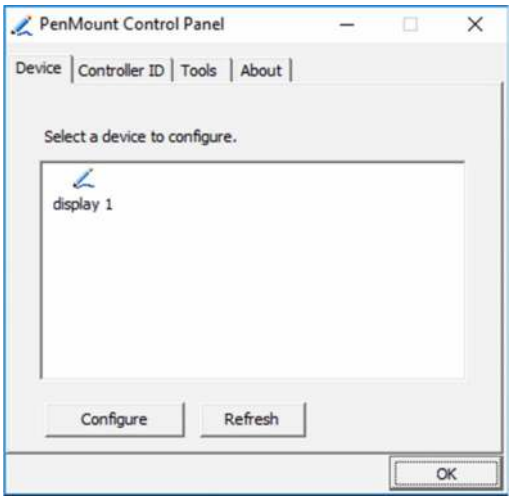

Step	Action
6	Assign the **Controller ID** for first time. 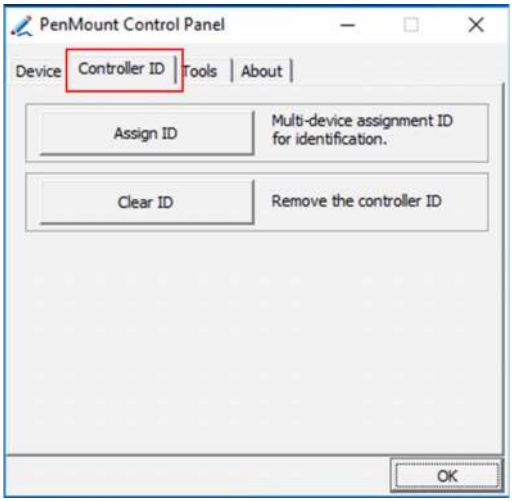
7	If host PC has monitor (DM or third-party panel), modify the **Table PC Settings** for first time. 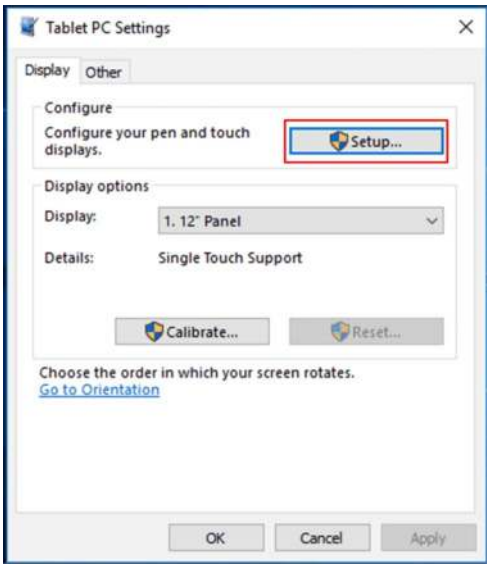

Disabling the Touch Function for a Display

Step	Action
1	Click **PenMount** Monitor icon in the tray bar, the contextual menu displays the **Control Panel**.
2	Click the **Control Panel**.
3	Select the display and click **Configure**.
4	Select **Exclusive Touch Utility**.
5	Exclusive touch tool: **NOTE:** Exclusive touch tool cannot turn off the touch panel itself when operating.
6	Set **Touch Enable** to **Off** for each display.

Chapter 3
Characteristics

Subject of this Chapter

This chapter lists the product characteristics.

What Is in This Chapter?

This chapter contains the following topics:

Topic	Page
Box iPC Characteristics	84
Display Characteristics	88
Display Adapter and Receiver / Transmitter Characteristics	89
Power Supply Characteristics	91
Environmental Characteristics	93

Box iPC Characteristics

Characteristics

Element	Characteristics			
	Box iPC Performance (HMIBMP)	Box iPC Universal (HMIBMU)	Box iPC Optimized (HMIBMO)	Box iPC Basic Optimized (HMIBMI)
Intel chipset and processor	Core i7-4650U 1.7 GHz	Celeron 2980U 1.6 GHz	Atom E3930 Up to 1.8 GHz	Atom E3930 Up to 1.8 GHz
Expansion slot	2-Slot: 2 x mini PCIe full size 4-Slot: ● 2 x mini PCIe full size and 1 x PCI + 1 x PCIe x4 ● 2 x mini PCIe full size and 2 x PCI ● 2 x mini PCIe full size and 1 x PCIe x1 + 1 x PCIe x4 Compliant with PCI Express 3.0 half size and PCI 2.2 half size.		Expandable: ● 1 x M.2 (for storage) ● 1 x mini PCIe full size	1 x mini PCIe full size
Memory	8 GB or 16 GB, DDR3L 1600 MHz, SO-DIMM SDRAM	4 GB or 8 GB, DDR3L 1600 MHz, SO-DIMM SDRAM	4 GB or 8 GB, DDR3L 1600 MHz, SO-DIMM SDRAM	4 GB, DDR3L 1600 MHz, SO-DIMM SDRAM
	512 KB MRAM for the user Read/Write speed: 35 ns		–	–
Storage memory	2 x SATA connectors, 1 x CFast slot, 1 x mSATA slot		Expandable: 1 x SATA connector	1 x eMMC
Watch dog timer	255 level timer interval, programmable 1...255 sec/min (setting through API)			
Buzzer	Yes			
Cooling method	Passive heat sink			
Weight (without HDD / CFast / mini card / PCIe card / PCI card)	2-Slot: 3.1 kg (6.8 lbs) 4-Slot: 3.9 kg (8.6 lbs)	2-Slot: 3.1 kg (6.8 lbs) 4-Slot: 3.9 kg (8.6 lbs)	Regular: 1.25 kg (2.75 lbs) Expandable: 1.3 kg (2.86 lbs)	1.2 kg (2.64 lbs)

MRAM Memory

The Box iPC Universal/Performance (HMIBMU/HMIBMP) support on board non-volatile memory, using MRAM technology for this feature; it offers SRAM compatible 35 ns read/write timing with unlimited endurance. The data is always non-volatile for greater than 20-years. The data is automatically protected on power loss by low-voltage inhibit circuitry to prevent writes with voltage out of specification.

Watchdog Timer

The watchdog timer is used to generate a system reset. The watchdog timer is programmable, with each unit equal to 1 second or 1 minute with 255 levels.

Serial Interface Box iPC Universal/Performance (HMIBMU/HMIBMP)

Element	Characteristics
Type	RS-232, RS-422/485 (COM1), with auto data flow control, modem-capable, electrically isolated
Transfer rate	Maximum 115.2 kbps
Connection	D-Sub 9-pin, plug

Serial Interface Box iPC Optimized (HMIBMO/HMIBMI)

Element	Characteristics
Type	HMIBMO RS-232 (COM1) non isolated RS-232, RS-422/485 (COM2) non isolated
	HMIBMI RS-232, RS-422/485 (non isolated)
Transfer rate	Maximum 115.2 kbps
Connection	D-Sub 9-pin, plug

USB Interface

Element	Characteristics
Type	USB 3.0 and USB 2.0
Transfer rate	Low speed (1.5 Mb/s), full speed (12 Mb/s), high speed (480 Mb/s) and super speed (5 Gb/s) (USB 3.0 port only)
Current load	USB 3.0: 0.9 A per connection and USB 2.0: 0.5 A per connection
Connection	Type A

Ethernet Interface

Element	Characteristics
Type	RJ45
Speed	10/100/1000 Mb/s base-T

DisplayPort

Element	Characteristics
Type	DisplayPort connector (when converting to DVI, DP to DVI adapter HMIYADDPDVI11 or cable is required)
Resolution (DP active 1/DP active 2)	Supports up to 3200 x 2000 at 60 Hz

NOTE:
- The Box iPC Universal/Performance can support two display ports. When the Box iPC is mounted with the display, the **DP active 2** is not functional.
- When running Windows®, the Box iPC Optimized can operate up to 2 displays on DP ports and a mounted display. When user is in BIOS only 2 displays can be used DM + DP1/2 or DP1 + DP2.
- After DisplayPort cable is connected, the Operating System must be rebooted.
- For connecting the Box iPC on display with DVI interface, use an active DP to DVI adapter.
- I/O ports (such as serial, USB, and Ethernet interfaces) on this product have internal port numbers that may differ from physical port numbers, such as **COM1**, **USB1** or **ETH1**, printed on the product and used for identification in this manual. Check the port numbers in your environment.

Operating Systems

Each product is delivered with a preinstalled operating system according to the part number:

Operating systems
Windows® 10 IoT Enterprise 2019 LTSC 64 bits MUI*1
Windows® 10 IoT Entreprise 2016 LTSB 64 bits MUI*1
Windows® Embedded 8.1 Industry 64 bits MUI
Windows® 7 Ultimate SP1 64 bits MUI
Windows® Embedded Standard 7 (WES7P) SP1 64 bits MUI
*1: ● Windows 10 IoT Enterprise 2016 LTSB: SV: 7.0 or less ● Windows 10 IoT Enterprise 2019 LTSC: SV: 8.0 or more

NOTE: All products must be connected to the internet during the first start-up for the operating system to activate.

Conformal Coating

Conformal coating is used for assembly process on:

- CPU carrier board
- Modular Display docking board

Board coating scope excludes:

- connectors
- screw holes (standoffs)
- chipsets
- RTC battery
- dip switches
- labels

NOTE: The conformal coating is available according to the product configuration

Display Characteristics

Characteristics

Element	4:3 12” screen size	W12” screen size	4:3 15” screen size	W15” screen size	W19”screen size	W22” screen size
Type	TFT LED LCD					
Size	12.1” Square 4:3	12.1” Wide 16:9	15” Square 4:3	15.6” Wide 16:9	18.5” Wide 16:9	21.5” Wide 16:9
Resolution (pixel)	XGA 1024 x 768	WHD/WXGA 1280 x 800	XGA 1024 x 768	WHD/FWXGA 1366 x 768	WHD/FWXGA 1366 x 768	Full HD 1920 x 1080
Number of colors	16.7 million					
Brightness control	20 steps for System Monitor user 9 steps for Node-RED user					
Backlight life	Life span > 50,000 h at 25 °C (77 °F)					
Touch screen	Resistive single touch	Capacitive multi-touch 5 simultaneous touch (projected capacitive)	Resistive single touch	Capacitive multi-touch 5 simultaneous touch (projected capacitive)		
Touch screen resolution (pixel)	2048 x 2048			4096 x 4096		
Anti-scratch surface	7 H hardness					
Front access	1 x USB2.0 1 x reset button	–	1 x USB2.0 1 x reset button	–	–	–
International protection	IP 66 / Nema 4x indoor					
Weight	2.3 kg (5.07 lbs)	2.25 kg (4.96 lbs)	4.2 kg (9.2 lbs)	4.3 kg (9.5 lbs)	5.2 kg (11.5 lbs)	6.6 kg (14.5 lbs)

USB Interface Front Panel for the Displays 4:3 15” and 4:3 12”

Element	Characteristics
Type	USB 2.0
Amount	1
Transfer rate	Low speed (1.5 Mbit/s), full speed (12 Mbit/s), and high speed (480 Mbit/s)
Current load	Maximum 0.5 A per connection
Connection	Type A

Display Adapter and Receiver / Transmitter Characteristics

Display Adapter Characteristics

Element	Characteristics
Weight (without Receiver module / Transmitter module)	1.8 Kg (3.96 lb)
Weight (with Receiver module / Transmitter module)	2.4 Kg (5.29 lb)

Display Adapter USB Interface

Element	Characteristics
Type	USB 2.0, type B
Amount	1
Transfer rate	Low speed (1.5 Mb/s), full speed (12 Mb/s), high speed (480 Mb/s)

Display Adapter DisplayPort

Element	Characteristics
Type	DisplayPort connector
Amount	1

NOTE: For connecting the Display Adapter and the Box iPC or a PC, use DP and USB cables: HMIYCABDP51 and HMIYCABUSB51, see in accessories.

NOTE: After DisplayPort cable is connected, the Operating System must be rebooted.

Receiver module (HMIYDARE11)

Element	Characteristics
Dimension	120 x 77.4 x 33.8 mm (4.72 x 3.05 x 1.33 in)
Power consumption	5 W
Point-to-point transmit	100 m (328 ft)
Connector	RJ45 port x 1
Cable specification	CAT6 (CAT5e under condition, see note below)
Operational temperature	0...55 °C (32...131 °F)

Transmitter module (HMIYDATR11)

Element	Characteristics
Dimension	80 x 77.4 x 33.8 mm (4.72 x 3.05 x 1.33 in)
Power consumption	3.5 W
Point-to-point transmit	100 m (328 ft)
Connector	RJ45 port x 1
Cable specification	CAT6 (CAT5e under condition, see note below)
Operational temperature	0...55 °C (32...131 °F)

NOTE: The CAT5e cable may be used for limited length, according to environment conditions and with the maximum screen resolution of 1920 x 1080 pixels.

Power Supply Characteristics

Box iPC DC Power Supply

Element	Characteristics
Rated voltage	Box iPC Universal/Performance (HMIBMU/HMIBMP): 24 Vdc (18...36 Vdc) Box iPC Optimized (HMIBMO): 12...24 Vdc (9.6...28.8 Vdc) Box iPC Basic Optimized (HMIBMI): 12...24 Vdc (9.6...28.8 Vdc)
Inrush current	Box iPC Universal/Performance (HMIBMU/HMIBMP): 8.9 A Box iPC Optimized (HMIBMO): 2.03 A Box iPC Basic Optimized (HMIBMI): 2.03 A
Power consumption	
Box iPC Performance (HMIBMP) with screen	4:3 12” Box iPC: 43.6 W typical, 57.87 W max. W12” Box iPC: 42.6 W typical, 58.65 W max. 4:3 15” Box iPC: 44.9 W typical, 53.04 W max. W15” Box iPC: 46.1 W typical, 54.5 W max. W19” Box iPC: 48.1 W typical, 63.28 W max. W22” Box iPC: 50.7 W typical, 64.85 W max.
Box iPC Universal (HMIBMU) with screen	4:3 12” Box iPC: 38.6 W typical, 52.87 W max. W12” Box iPC: 37.4 W typical, 53.65 W max. 4:3 15” Box iPC: 39.9 W typical, 48.04 W max. W15” Box iPC: 40.9 W typical, 49.5 W max. W19” Box iPC: 43.1 W typical, 58.28 W max. W22” Box iPC: 45.2 W typical, 59.85 W max.
Box iPC Optimized (HMIBMO) with screen	4:3 12” Box iPC: 17.1 W typical, 42.87 W max. W12” Box iPC: 16.5 W typical, 43.65 W max. 4:3 15” Box iPC: 18.3 W typical, 38.04 W max. W15” Box iPC: 20.2 W typical, 39.5 W max. W19” Box iPC: 21.1 W typical, 48.28 W max. W22” Box iPC: 22.2 W typical, 49.85 W max.
Box iPC Basic Optimized (HMIBMI) with screen	4:3 12” Box iPC: 15.1 W typical, 37.87 W max. W12” Box iPC: 15.9 W typical, 38.65 W max. 4:3 15” Box iPC: 16.7 W typical, 33.04 W max. W15” Box iPC: 18.6 W typical, 34.5 W max. W19” Box iPC: 19.5 W typical, 43.28 W max. W22” Box iPC: 21.1 W typical, 44.85 W max.
Box iPC Performance	Box iPC: 40 W
Box iPC Universal (HMIBMU)	Box iPC: 35 W
Box iPC Optimized (HMIBMO)	Box iPC: 25 W
Box iPC Basic Optimized (HMIBMI)	Box iPC: 20 W

Display DC Power Supply

Element	Characteristics
Rated voltage	24 Vdc
Power consumption	4:3 12”: 17.87 W max. W12”: 18.65 W max. 4:3 15”: 13.04 W max. W15”: 14.5 W max. W19”: 23.28 W max. W22”: 24.85 W max.

Display Adapter DC Power Supply

Element	Characteristics
Rated voltage	24 Vdc
Inrush current Display Adapter	5.3 A
Power consumption	Display Adapter: 2 W max. Receiver module: 5 W max. Transmitter module: 3.5 W max.
Power consumption with Receiver module	4:3 12” Display Adapter: 24.87 W max. W12” Display Adapter: 25.65 W max. 4:3 15” Display Adapter: 20.04 W max. W15” Display Adapter: 21.5 W max. W19” Display Adapter: 30.28 W max. W22” Display Adapter: 31.85 W max.
Power consumption with Receiver module and Transmitter module	4:3 12” Display Adapter: 28.37 W max. W12” Display Adapter: 29.15 W max. 4:3 15” Display Adapter: 23.54 W max. W15” Display Adapter: 25 W max. W19” Display Adapter: 33.78 W max. W22” Display Adapter: 35.35 W max.

Environmental Characteristics

Characteristics

Characteristics	Value
Degree of protection	IP 66 front side of display
Pollution degree	For use in pollution degree 2 environment
Operating temperature	0…55 °C (32...131 °F) except for Box only: ● HDD installed: limited to 45 °C (113 °F) ● 2 x optional interfaces + display: limited to 45 °C (113 °F) ● PCI / PCIe: limited to 45 °C (113 °F)
Operating temperature for horizontal mounting for Box iPC Universal/Performance (HMIBMU/HMIBMP)	0…50 °C (32...122 °F): ● HDD/optional interface installed: limited to 40 °C (104 °F) ● PCI/PCIe card under 6 W for two cards (3 W each): limited to 40 °C (104 °F) ● PCI/PCIe card with fan kit over 6 W for two cards: limited to 40 °C (104 °F)
Operating temperature for horizontal mounting for Box iPC Optimized (HMIBMO)	0…55 °C (32...131 °F): ● HDD/optional interface installed: limited to 45 °C (113 °F)
Operating temperature for Box iPC Optimized (HMIBMI)	0…50 °C (32...122 °F): ● Optional interface installed: limited to 45 °C (113 °F)
Storage temperature (HMIBMU/HMIBMP/HMIBMO)	-30...70 °C (-22...158 °F)
Storage temperature (HMIBMI)	-20...60 °C (-4...140 °F)
Operating altitude	2,000 m (6,560 ft) max
Random vibration	5...500 Hz: 2 G_{rms} with SSD or CFast or eMMC 5...500 Hz: 1 G_{rms} with HDD
Operating humidity	10...95 % RH at 40 °C (104 °F), no condensation
Storage humidity	10...95 % RH at 40 °C (104 °F), no condensation

Chapter 4
Dimensions

Subject of this Chapter

This chapter describes Harmony Box iPC, display and Display Adapter dimensions.

What Is in This Chapter?

This chapter contains the following topics:

Topic	Page
Box iPC Dimensions	96
Display Dimensions	99
Display Adapter Dimensions	107

Box iPC Dimensions

Box iPC Universal/Performance 2-Slot Dimensions (HMIBMU/HMIBMP)

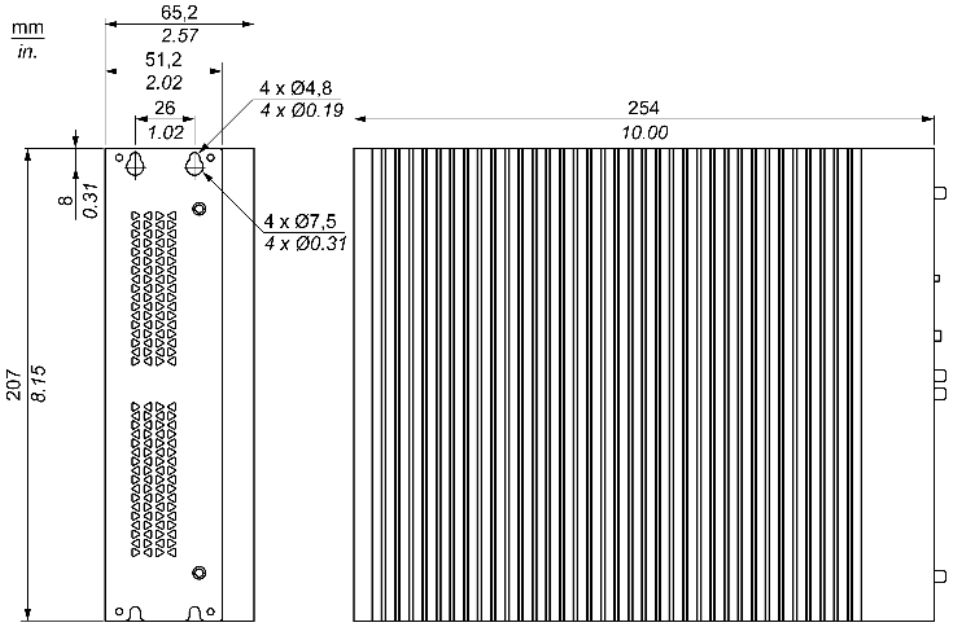

Box iPC Universal/Performance 4-Slot Dimensions (HMIBMU/HMIBMP)

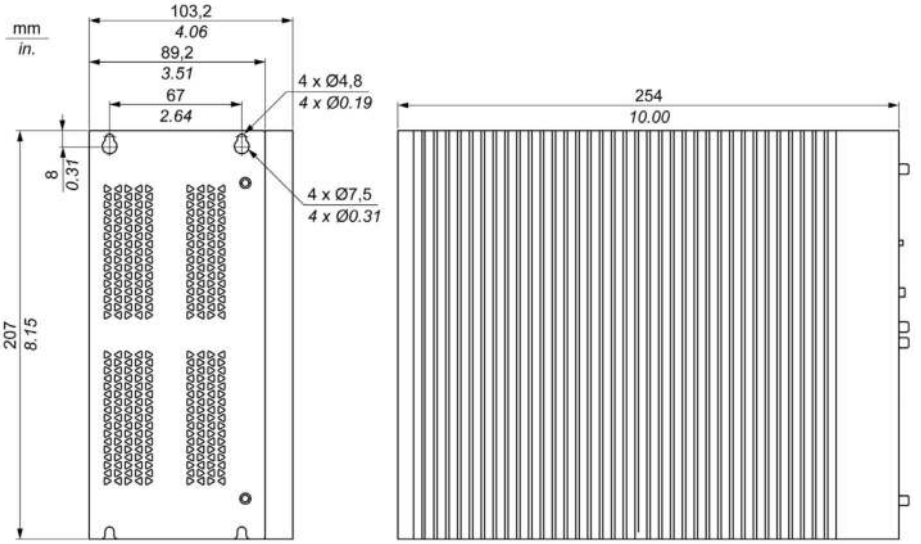

Harmony Box iPC Optimized Dimensions (HMIBMI)

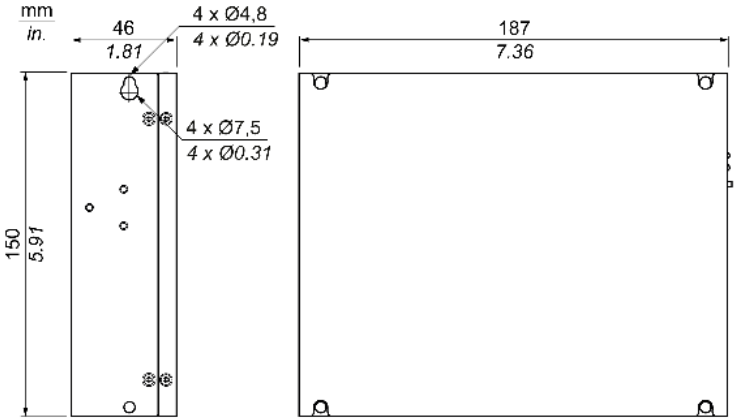

Harmony Box iPC Optimized Dimensions (HMIBMO Regular)

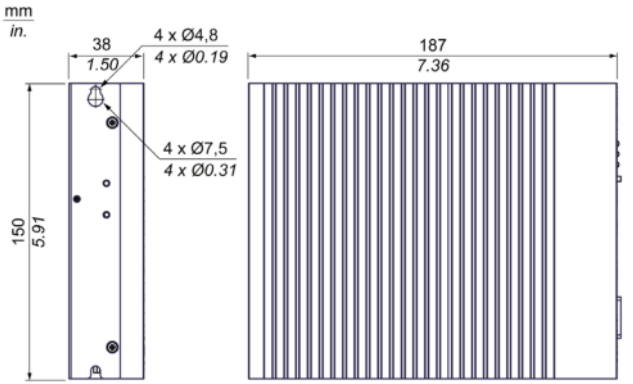

Harmony Box iPC Optimized Dimensions (HMIBMO Expandable)

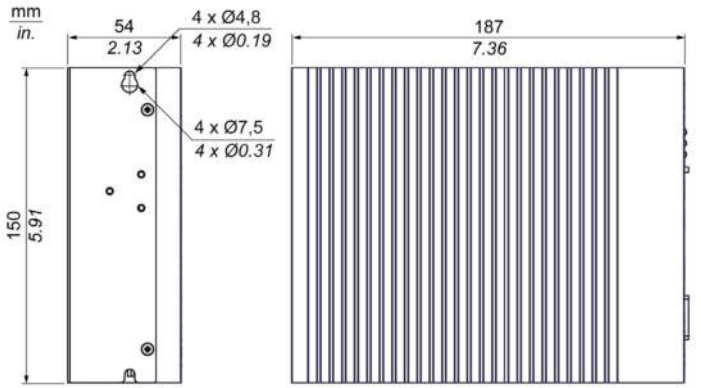

Dimensional Tolerances

The table indicates the general tolerance for the dimensions:

Nominal measurement range	General tolerance acc. DIN ISO 2768 medium
up to 6 mm (up to 0.236 in)	±0.1 mm (±0.004 in)
6...30 mm (0.236...1.181 in)	±0.2 mm (±0.0078 in)
30...80 mm (1.181...3.149 in)	±0.25 mm (±0.0098 in)
80...180 mm (3.149...7.08 in)	±0.3 mm (±0.012 in)
180...400 mm (7.08...15.747 in)	±0.5 mm (±0.02 in)

Display Dimensions

Display 4:3 12” Dimensions

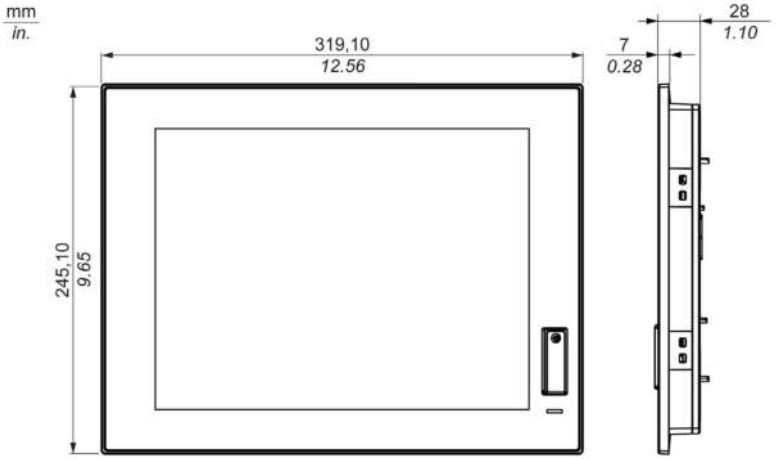

Display 4:3 12” Dimensions with Fasteners

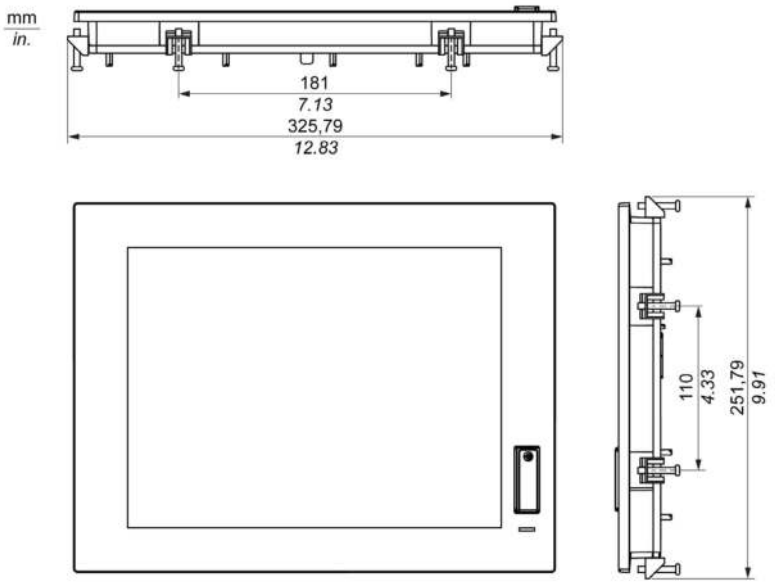

Display W12” Dimensions

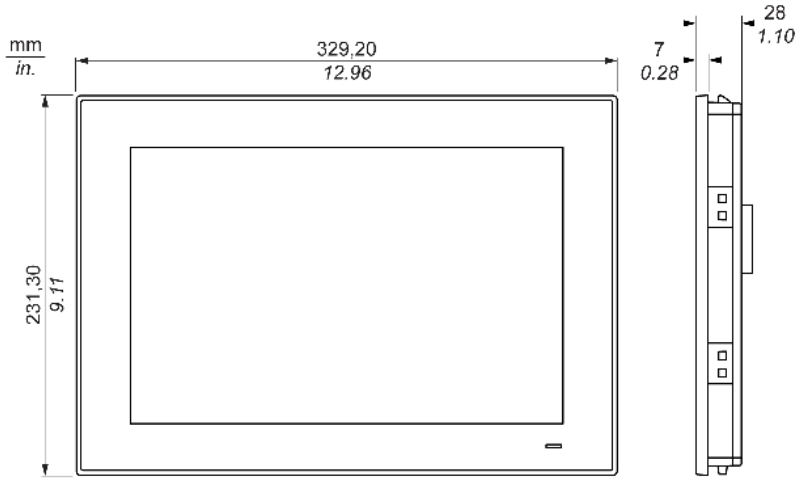

Display W12” Dimensions with Fasteners

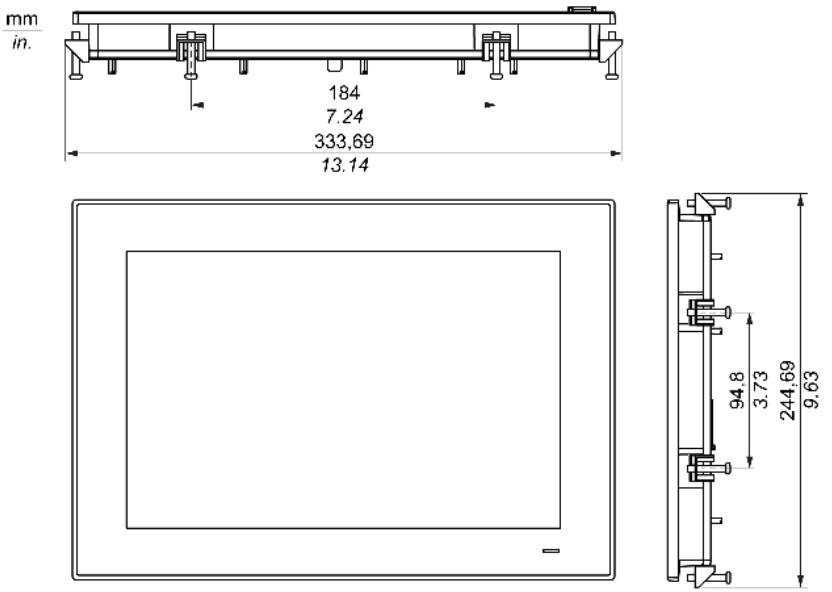

Display 4:3 15” Dimensions

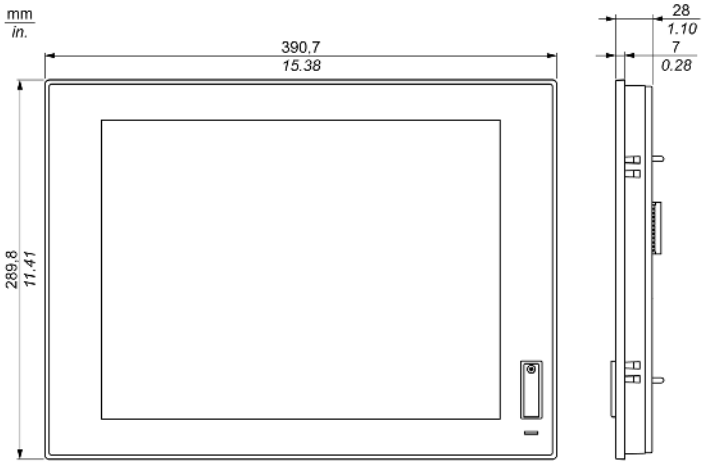

Display 4:3 15” Dimensions with Fasteners

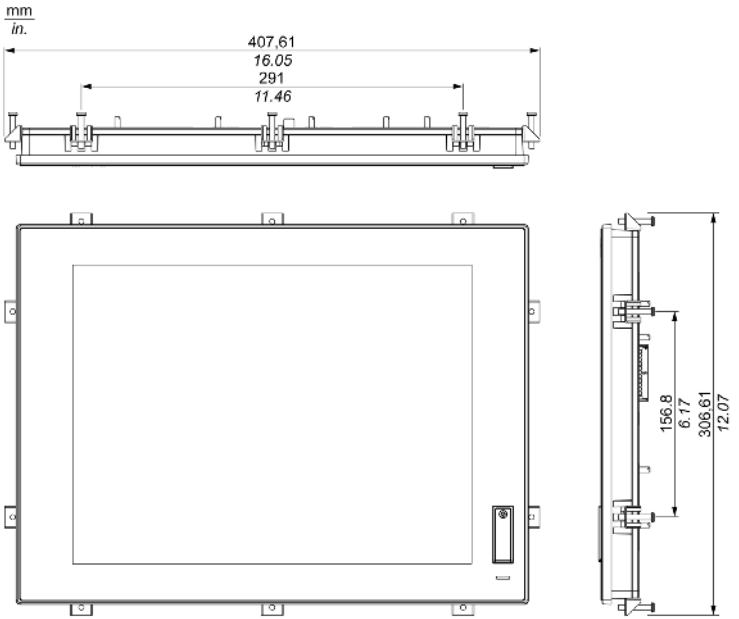

Display W15” Dimensions

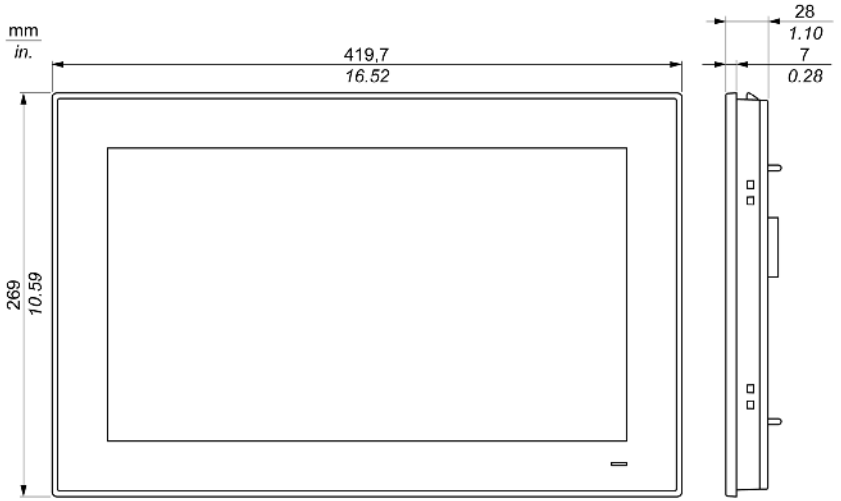

Display W15” Dimensions with Fasteners

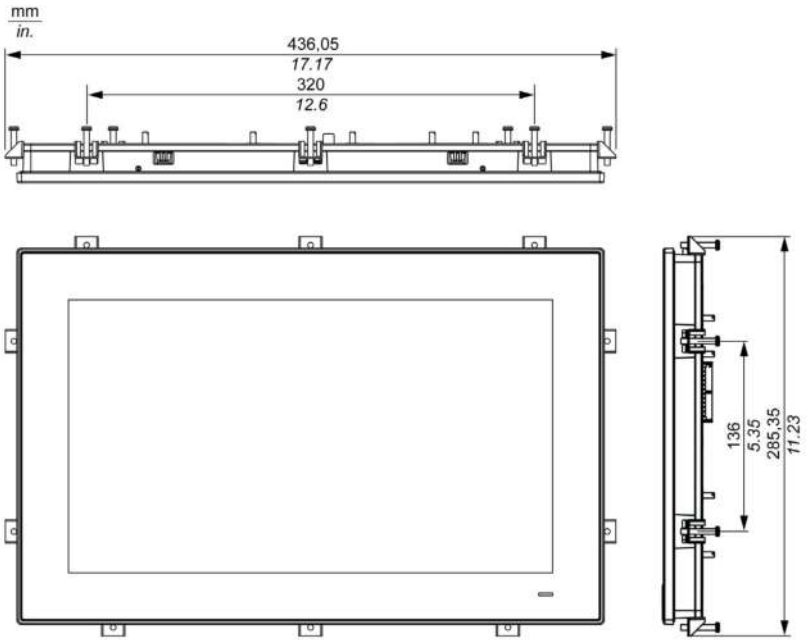

Display W19” Dimensions

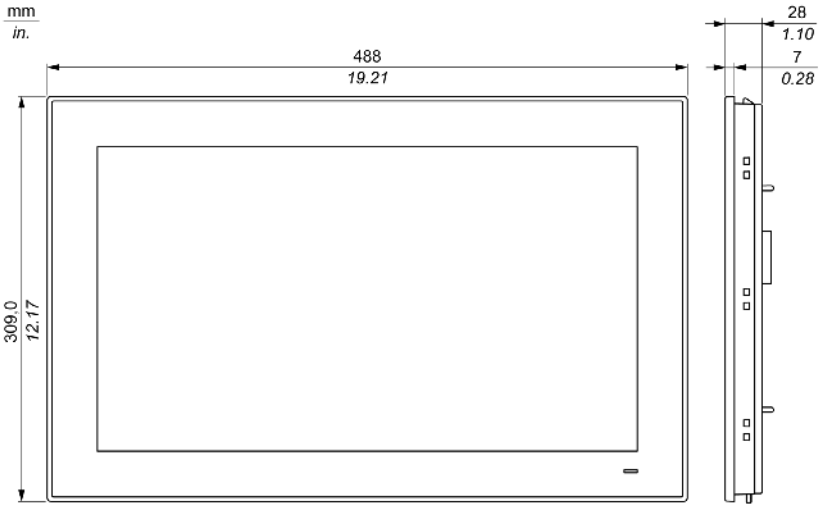

Display W19” Dimensions with Fasteners

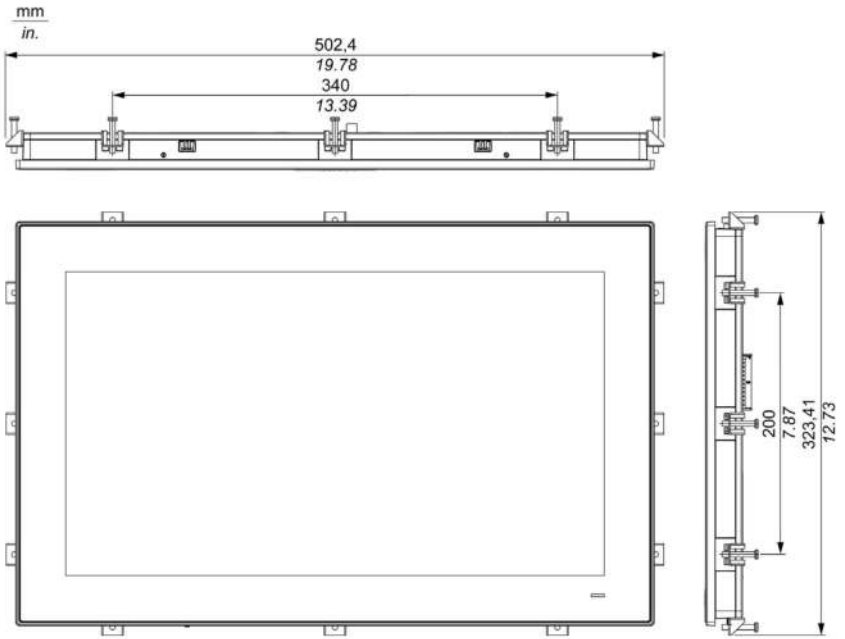

Display W22” Dimensions

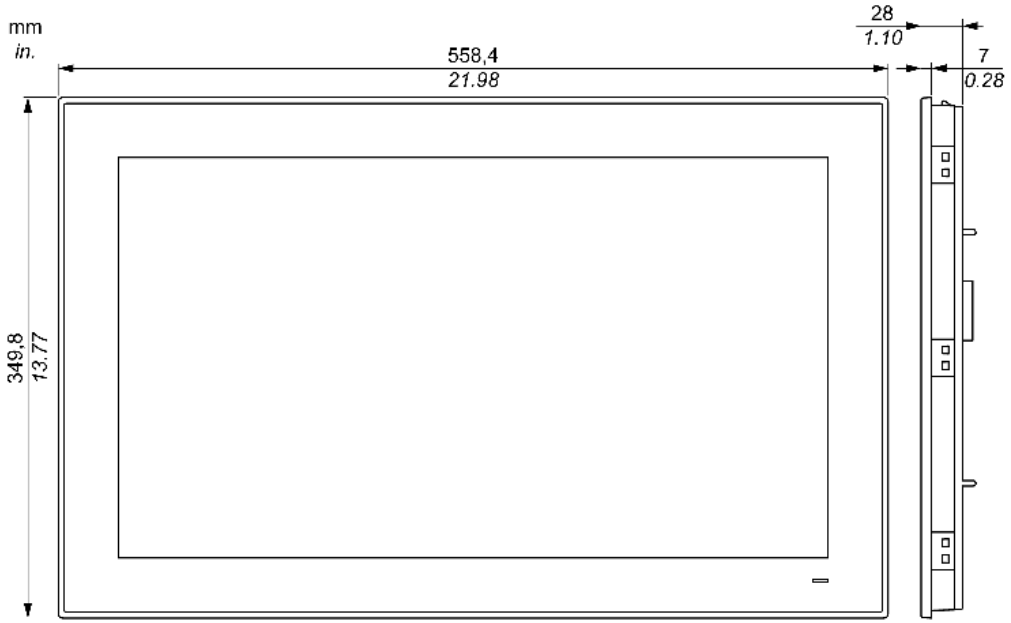

Display W22” Dimensions with Fasteners

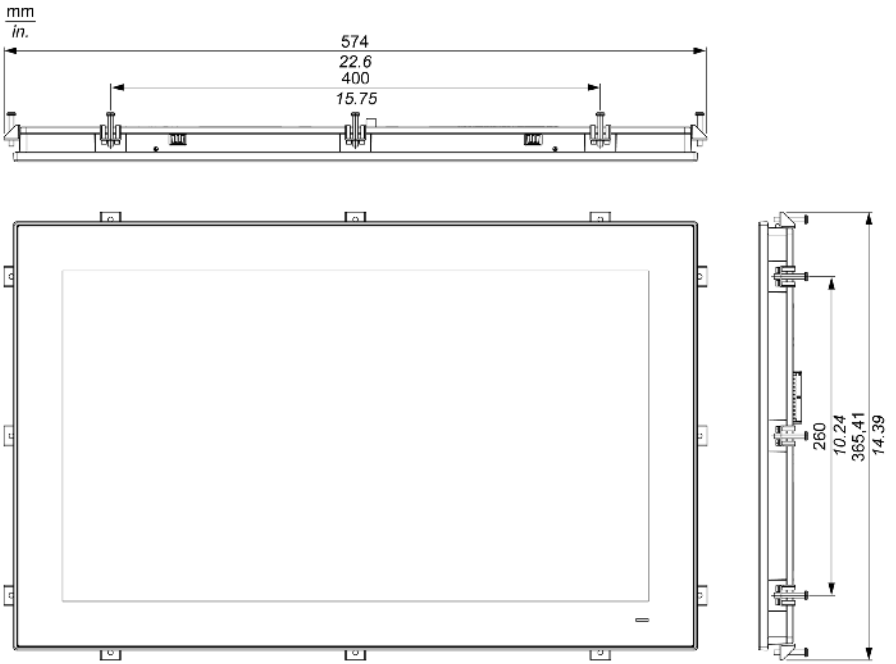

Installation Fastener Dimensions

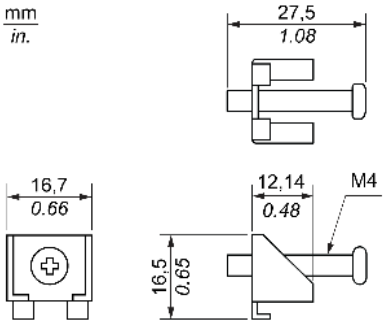

Dimensional Tolerances

The table indicates the general tolerance for the dimensions:

Nominal measurement range	General tolerance acc. DIN ISO 2768 medium
6...30 mm (0.236...1.181 in)	±0.2 mm (±0.0078 in)
30...80 mm (1.181...3.149 in)	±0.25 mm (±0.0098 in)
80...180 mm (3.149...7.08 in)	±0.3 mm (±0.012 in)
180...600 mm (7.08...23.62 in)	±0.5 mm (±0.02 in)

Display Adapter Dimensions

Dimensions

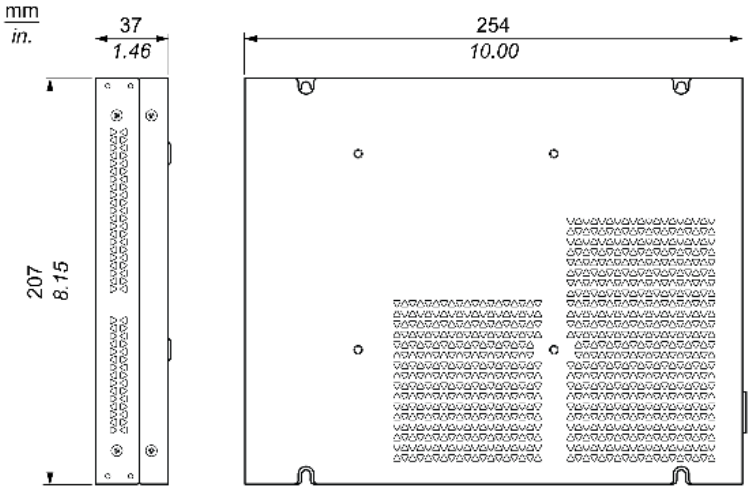

Dimensional Tolerances

The table indicates the general tolerance for the dimensions:

Nominal measurement range	General tolerance acc. DIN ISO 2768 medium
30...80 mm (1.181...3.149 in)	±0.25 mm (±0.0098 in)
80...180 mm (3.149...7.08 in)	±0.3 mm (±0.012 in)
180...400 mm (7.08...15.747 in)	±0.5 mm (±0.02 in)

Chapter 5
Installation

What Is in This Chapter?

This chapter contains the following topics:

Topic	Page
Introduction	110
Box iPC Installation	111
Display and Box iPC Installation	115
Display and Display Adapter Installation	126

Introduction

Overheating of the system can cause incorrect software behavior. To prevent the system from overheating, be aware of the following:

- The environment characteristics of the system must be respected.
- The Box iPC and display are only permitted for operation in closed rooms.
- The display cannot be situated in direct sunlight.
- The Box iPC vent holes must not be covered.
- When mounting the display, do not exceed the allowed mounting angle.

⚠ WARNING

UNINTENDED EQUIPMENT OPERATION

- Do not place the Harmony Industrial PC next to other devices that might cause overheating.
- Keep the Harmony Industrial PC away from arc-generating devices such as magnetic switches and non-fused breakers.
- Avoid using the Harmony Industrial PC in environments where corrosive gases are present.
- Install the Harmony Industrial PC in a location providing a minimum clearance of 10 mm (0.39 in) or more on the left and right sides, 50 mm (1.96 in) or more on the rear side, and 100 mm (3.93 in) or more above and below the product from all adjacent structures and equipment.
- Install the Harmony Industrial PC with sufficient clearance for cable routing and cable connectors.

Failure to follow these instructions can result in death, serious injury, or equipment damage.

Box iPC Installation

Installation of the Box iPC Universal/Performance (HMIBMU/HMIBMP)

Follow these steps for installation of the Box iPC:

Step	Action
1	Remove the power and confirm that the power supply is disconnected from its power source.
2	Wall mounting: Fasten the Box iPC Universal/Performance on the cabinet with four M4 screws (6 mm (0.24 in)): 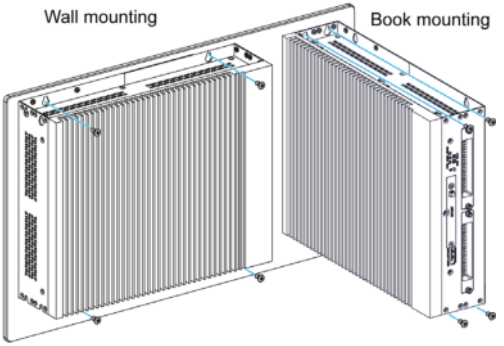 **NOTE:** ● The book mounting is not allowed for DNV (Det Norske Veritas) certified configuration. ● The recommended torque to tighten these screws is 0.5 Nm (4.5 lb-in). Horizontal mounting: Fasten the Box iPC Universal/Performance with four M4 screws (8 mm (0.31 in)): 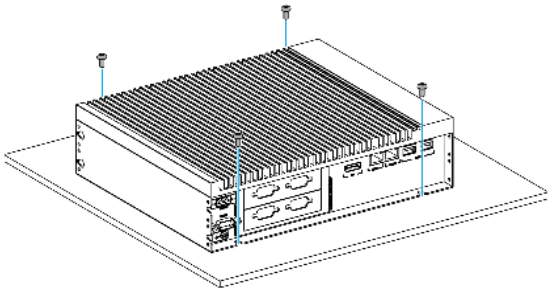 **NOTE:** ● The horizontal mounting is allowed with a temperature derating. (see Environmental Characteristics *(see page 93)*). ● The recommended torque to tighten these screws is 0.5 Nm (4.5 lb-in).

Installation of the Box iPC Optimized (HMIBMI/HMIBMO)

Follow these steps for installation of the Box iPC:

Step	Action
1	Remove the power and confirm that the power supply is disconnected from its power source.
2	Wall mounting: Fasten the Box iPC on the cabinet with four M4 screws (8 mm (0.31 in)). Book mounting: Fasten the Box iPC on the cabinet with two M4 screws (8 mm (0.31 in)). 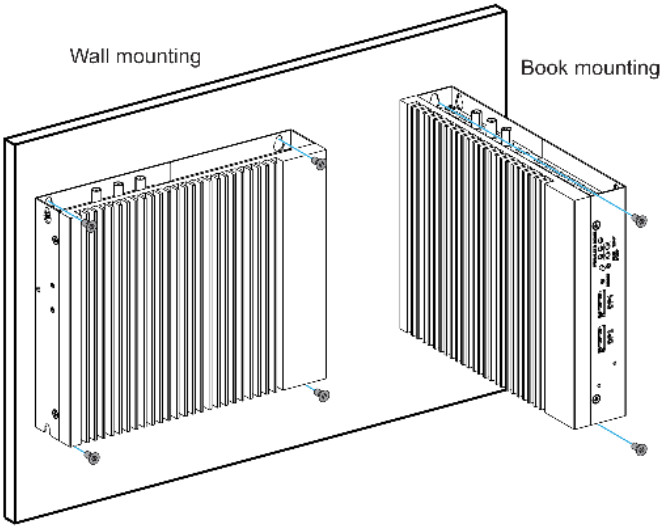 **NOTE:** The recommended torque to tighten these screws is 0.5 Nm (4.5 lb-in). Horizontal mounting: Fasten the Box iPC with four M4 screws (8 mm (0.31 in)). **NOTE:** ● The horizontal mounting is allowed with a temperature derating (see Environmental Characteristics *(see page 93)*). ● The recommended torque to tighten these screws is 0.5 Nm (4.5 lb-in).

Mounting Orientation

The following figure shows the allowed mounting orientation for the Box iPC:

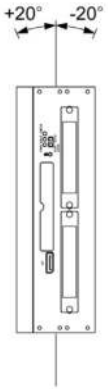

Spacing Requirements

In order to provide sufficient air circulation, mount the Box iPC so that the spacing on the top, bottom, and side is as follows:

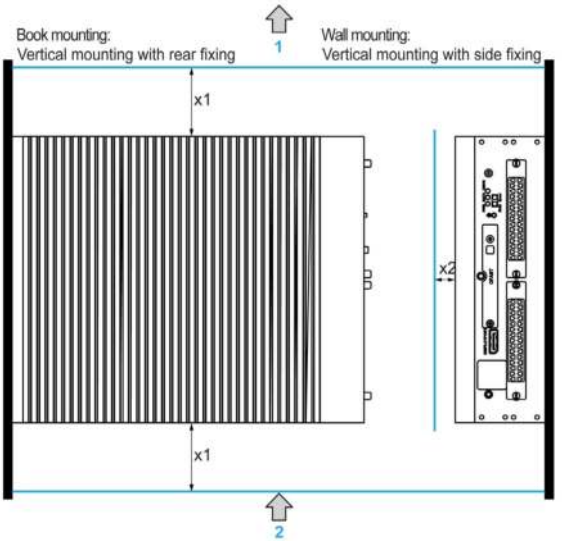

1 Air out
2 Air in
x1 > 100 mm (3.93 in)
x2 > 50 mm (1.96 in)

Horizontal mounting:

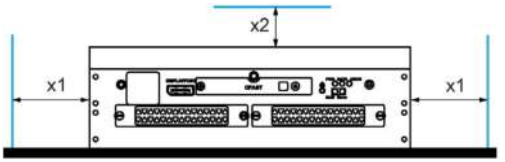

x1 > 100 mm (3.93 in)
x2 > 50 mm (1.96 in)

Installation Din-Rail Mounting of the Box iPC Optimized (HMIBMI/HMIBMO)

Follow these steps for installation of the Box iPC:

Step	Action
1	Remove the power and confirm that the power supply is disconnected from its power source.
2	Fasten the Din-rail bracket (HMIYADBMODIN11) to the Box iPC with three M3 screws (6 mm (0.23 in)): 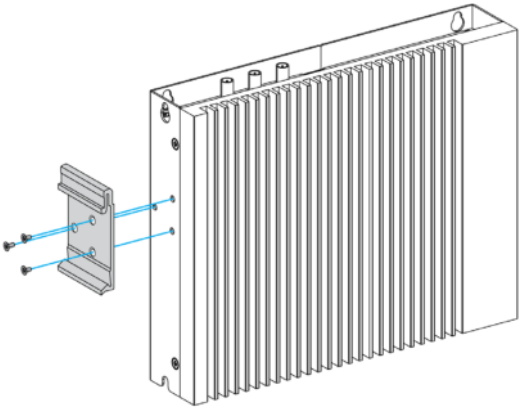
3	Hook the Box iPC Optimized with bracket on the mounting rail: 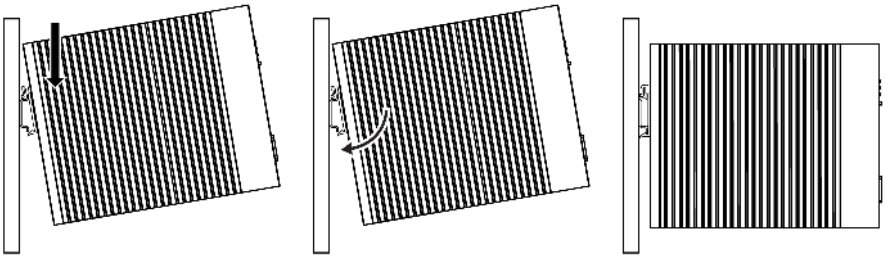

Display and Box iPC Installation

Panel Cut Dimensions

For cabinet installation, you need to cut the correctly sized opening in the installation panel according to the model of display.

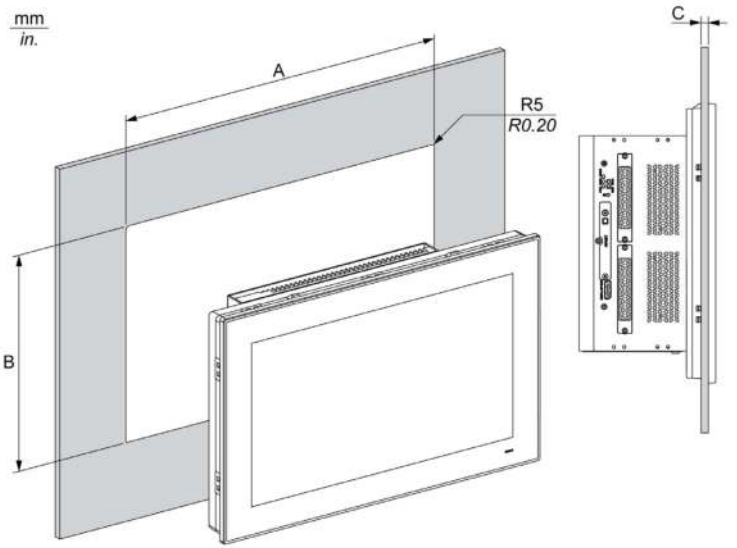

Display Cut-out	A	B	C	R
4:3 12”	301.5 ±0.5 mm (11.87 ±0.02 in)	227.5 ±0.4 mm (8.95 ±0.02 in)	2...4 mm (0.08...0.16 in)	5 mm (0.20 in)
W12”	310 ±0.7 mm (12.2 ±0.03 in)	221 ±0.4 mm (8.7 ±0.02 in)	2...6 mm (0.08...0.24 in)	
4:3 15”	383.5 ±0.7 mm (15.1 ±0.03 in)	282.5 ±0.4 mm (11.12 ±0.02 in)		
W15”	412.4 ±0.7 mm (16.24 ±0.03 in)	261.7 ±0.4 mm (10.3 ±0.02 in)		
W19”	479.3 ±1 mm (18.87 ±0.04 in)	300.3 ±0.7 mm (11.82 ±0.03 in)		
W22”	550.3 ±1 mm (21.67 ±0.04 in)	341.8 ±0.7 mm (13.46 ±0.03 in)		

NOTE:

- Ensure that the thickness of the installation panel is relevant.
- All installation panel surfaces used should be strengthened. Due consideration should be given to the weight of the display, especially if high levels of vibration are expected and the installation panel can move. Attach metal reinforcing strips to the inside of the panel near the panel cut-out to increase the strength of the installation panel.
- Ensure that all installation tolerances are maintained.
- The display is designed for use on a flat surface of a Type 4X enclosure (indoor use only).

Vibration and Shocks

Take extra care with respect to vibration levels when installing or moving the Box iPC. If you move the Box iPC while it is installed in a rack equipped with caster wheels, it may undergo excessive shock and vibration.

⚠ CAUTION

EXCESSIVE VIBRATION

- Plan your installation activities so that shock and vibration tolerances in the unit are not exceeded.
- Ensure that the installation panel opening and thickness are within the specified tolerances.
- Before mounting the Harmony Industrial PC into a cabinet or panel, ensure that the installation gasket is in place. The installation gasket provides additional protection from vibration.
- Tighten the installation fasteners using a torque of 0.5 Nm (4.5 lb-in).

Failure to follow these instructions can result in injury or equipment damage.

Installation Gasket

The gasket is required to meet the protection ratings (IP66 or Type 4X indoor) of the display.

NOTE: IP66 is not part of UL certification.

⚠ CAUTION

LOSS OF SEAL

- Inspect the gasket prior to installation or reinstallation, and periodically as required by your operating environment.
- Replace the gasket if visible scratches, tears, dirt, or excessive wear are noted during inspection.
- Do not stretch the gasket unnecessarily or allow the gasket to contact the corners or edges of the frame.
- Ensure that the gasket is fully seated in the installation groove.
- Install the Harmony Industrial PC into a panel that is flat and free of scratches or dents.
- Tighten the installation fasteners using a torque of 0.5 Nm (4.5 lb-in).

Failure to follow these instructions can result in injury or equipment damage.

Installation of the Display

The installation gasket and the installation fasteners are required for the installation of the display. The panel mounting process of the installation can be completed by one person.

⚠ CAUTION

OVERTORQUE AND LOOSE HARDWARE

- Do not exert more than 0.5 Nm (4.5 lb-in) of torque when tightening the installation fastener, enclosure, accessory, or terminal block screws. Tightening the screws with excessive force can damage the installation fastener.
- When fastening or removing screws, ensure that they do not fall inside the Harmony Industrial PC chassis.

Failure to follow these instructions can result in injury or equipment damage.

NOTE: The installation fasteners are required to meet the protection ratings (IP66 or Type 4X indoor) of the display. IP66 is not part of UL certification.

Follow these steps for easy installation of the display:

Step	Action
1	Remove all power and confirm that the power supply is disconnected from its power source.
2	Check that the gasket is correctly attached to the display. **NOTE:** When checking the gasket, avoid contact with the sharp edges of the display frame, and insert the gasket completely into its groove.
3	Fasten the Box iPC on the rear side of the display with four screws: 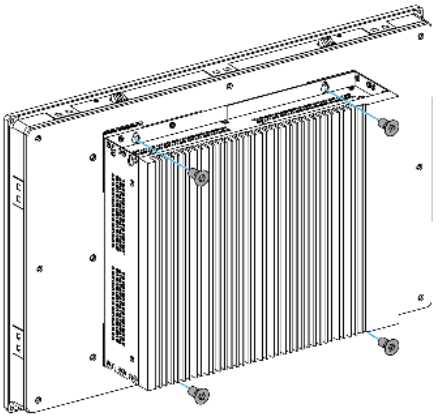 **NOTE:** The recommended torque to tighten these screws is 0.5 Nm (4.5 lb-in).

Step	Action
4	Release the two screws at the bottom: 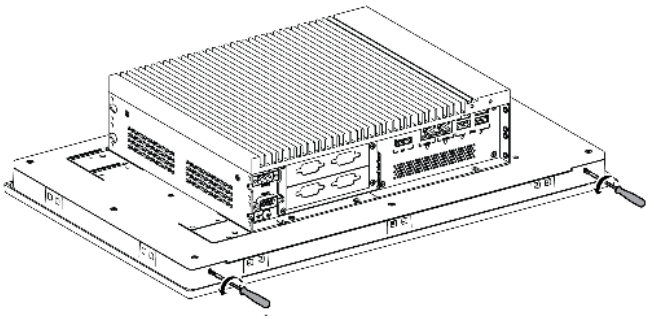
5	Loosen the cross-slotted screws from the top of the display to raise the snap hook. You do not need a screw driver to raise the snap hook of the Display 4:3 12”: 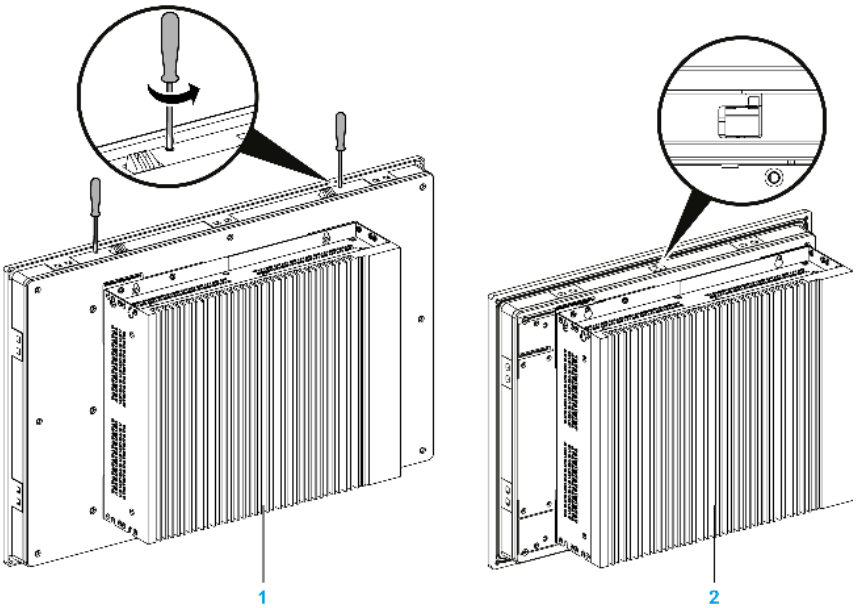 **1** Display W12”, 4:3 15”, W15”, W19” and W22” **2** Display 4:3 12” Note: ● One snap hook for the display W12” and 4:3 12” ● Two snap hooks for the display 4:3 15”, W15”, W19” and W22”

Step	Action
6	Install the display in the panel opening and push it into the wall. The snap hook holds the display in place: 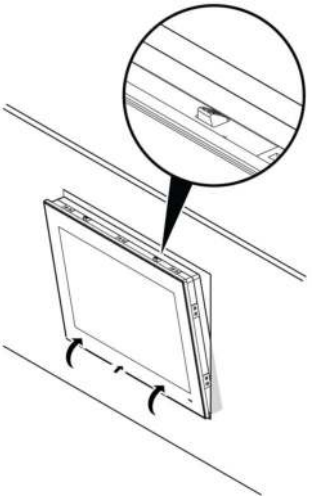
7	Insert the installation fasteners into the slots of the display: 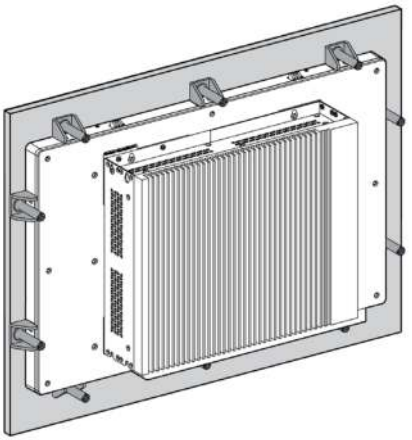 Note: ● 8 installation fasteners for the display W12” and 4:3 12” ● 10 installation fasteners for the display 4:3 15” and W15” ● 12 installation fasteners for the display W19” and W22”

8	Insert each fastener in its corresponding slot and pull the fastener back until it is flush with the rear of the fastener hole: 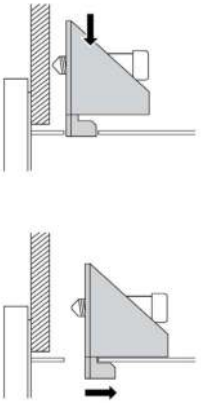
9	Tighten each of the cross-slotted fastener screws, and fasten the display in place: 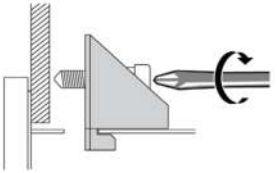 **NOTE:** To ensure a high degree of moisture resistance, use a torque of 0.5 Nm (4.5 lb-in).
10	Do not tilt the display any more than the amount allowed by the mounting orientation requirements.

Spacing Requirements

In order to provide sufficient air circulation, mount the display so that the spacing above, below, and on the sides of the unit is as follows:

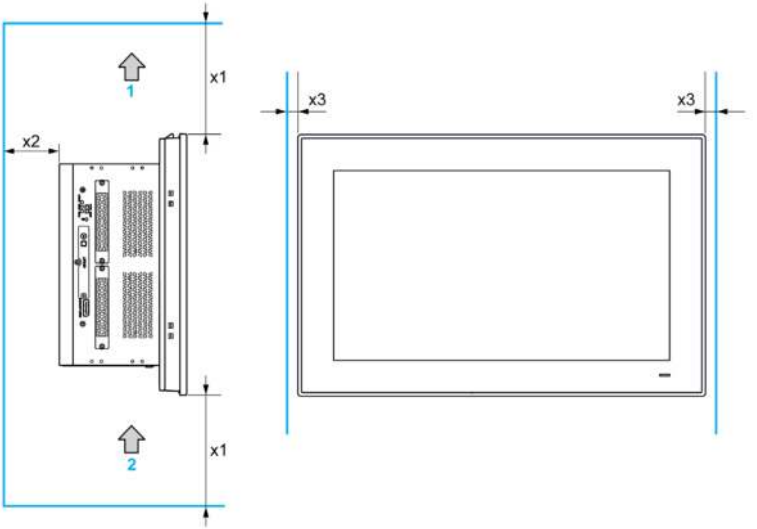

1 Air out
2 Air in
x1 > 100 mm (3.93 in)
x2 > 50 mm (1.96 in)
x3 > 15 mm (0.59 in)

Pressure Differences

When applying and installing Harmony HMI products, it is important that steps are taken to eliminate any pressure difference between the inside and the outside of the enclosure on which the HMI is mounted. A higher pressure inside the enclosure can cause delamination of the front membrane of the HMI display. A very small pressure inside of the enclosure will act on the large area of the membrane and can result in sufficient force to delaminate the membrane and thus cause failure of the HMI's touch capability. Pressure differences can often occur in applications where there are multiple fans and ventilators moving air at different rates in different rooms. Please follow these proven techniques to ensure that an HMI's function is not impacted by this mis-application:

1. Seal all conduit connections inside of the enclosure, especially those that lead to other rooms that may be at a different pressure.
2. Where applicable, install a small weep hole at the bottom of the enclosure that will allow the internal and external pressures to always equalize. This approach is simple to apply while maintaining conformance to ingress requirements.

Mounting Orientation

The following figure shows the allowed mounting orientation for the display:

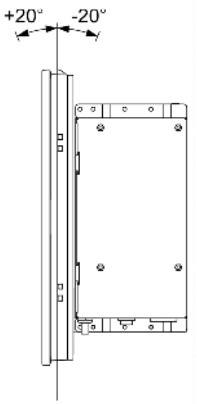

Installation with the VESA (Video Electronics Standards Association)

	Display					
	W12”	4:3 12”	W15”	4:3 15”	W19”	W22”
Box iPC Universal/Performance (HMIBMU/HMIBMP) 2-Slot	HMIYPVESA6X21		HMIYPVESA21			
Box iPC Universal/Performance (HMIBMU/HMIBMP) 4-Slot	not possible		HMIYPVESA41			
Box iPC Optimized (HMIBMI/HMIBMO)	HMIYPVESA6X21		HMIYPVESA21			
Display Adapter	available without adapter					

Follow these steps to install the Box iPC with the VESA:

Step	Action
1	Put the VESA mounting kit on the rear side of the Box iPC: 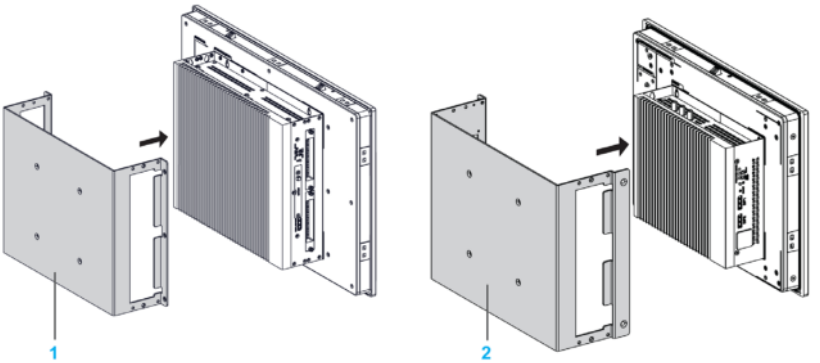 **1** HMIYPVESA21 or HMIYPVESA41 **2** HMIYPVESA6X21 for the display W12” and 4:3 12”
2	Fasten the VESA (HMIYPVESA21 or HMIYPVESA41) mounting kit on the rear side of the Box iPC Universal/Performance with six M4 screws (8 mm (0.31 in)): Fasten the VESA (HMIYPVESA6X21) mounting kit on the rear side of the Box iPC Optimized with four M4 screws (8 mm (0.31 in)): 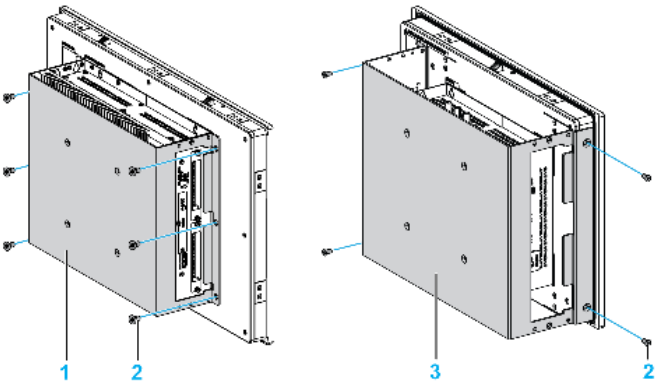 **1** HMIYPVESA21 or HMIYPVESA41 plate position (size 100 x 100 mm (3.94 x 3.94 in)) **2** VESA mount screws for attachment **3** HMIYPVESA6X21 plate position (size 100 x 100 mm (3.94 x 3.94 in)) **NOTE:** The recommended torque to tighten these screws is 0.5 Nm (4.5 lb-in).

Step	Action
3	Install your support in the corresponding holes as shown. Fasten the VESA support with four M4 screws (10 mm (0.39 in)). Verify that the angle of the Box iPC is tilted no more than the amount allowed by the mounting orientation requirements. 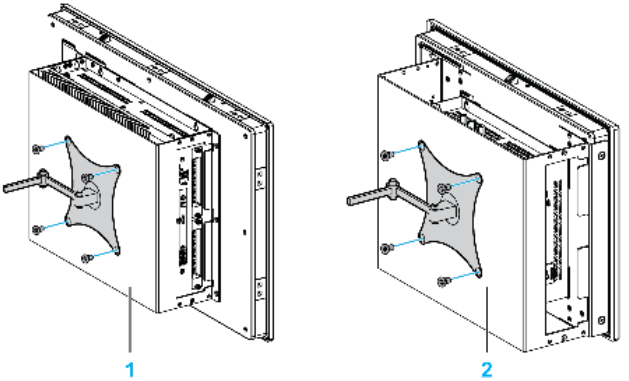 1 HMIYPVESA21 or HMIYPVESA41 2 HMIYPVESA6X21 **NOTE:** The recommended torque to tighten these screws is 0.5 Nm (4.5 lb-in).

Display and Display Adapter Installation

Panel Cut Dimensions

For cabinet installation, you need to cut the correctly sized opening in the installation panel according to the model of display *(see page 115)*.

Installation Gasket

The gasket is required to meet the protection ratings (IP66 or Type 4X indoor) of the display.

NOTE: IP66 is not part of UL certification.

⚠ CAUTION

LOSS OF SEAL

- Inspect the gasket prior to installation or reinstallation, and periodically as required by your operating environment.
- Replace the gasket if visible scratches, tears, dirt, or excessive wear are noted during inspection.
- Do not stretch the gasket unnecessarily or allow the gasket to contact the corners or edges of the frame.
- Ensure that the gasket is fully seated in the installation groove.
- Install the Harmony Industrial PC into a panel that is flat and free of scratches or dents.
- Tighten the installation fasteners using a torque of 0.5 Nm (4.5 lb-in).

Failure to follow these instructions can result in injury or equipment damage.

Installation of the Display

The installation gasket and the installation fasteners are required for the easy installation of the display. The panel mounting process of the installation can be completed by one person.

NOTE: For installation, the suggested mounting panel thickness is above 2 mm (0.079 in).

⚠ CAUTION

OVERTORQUE AND LOOSE HARDWARE

- Do not exert more than 0.5 Nm (4.5 lb-in) of torque when tightening the installation fastener, enclosure, accessory, or terminal block screws. Tightening the screws with excessive force can damage the installation fastener.
- When fastening or removing screws, ensure that they do not fall inside the Harmony Industrial PC chassis.

Failure to follow these instructions can result in injury or equipment damage.

Follow these steps to install the display with the Display Adapter:

Step	Action
1	Remove all power and confirm that the power supply is disconnected from its power source.
2	Check that the gasket is correctly attached to the display. **NOTE:** When checking the gasket, avoid contact with the sharp edges of the display frame, and insert the gasket completely into its groove.
3	Fasten the Display Adapter on the rear side of the display with four screws: 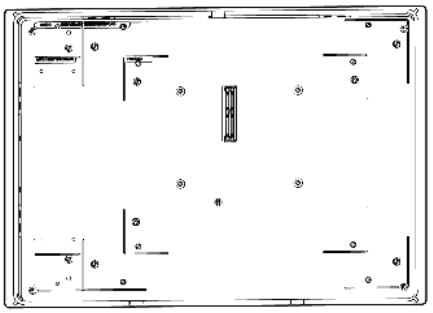

Step	Action
4	Fasten the Display Adapter on the rear side of the display with four M4 screws (6 mm (0.24 in)): 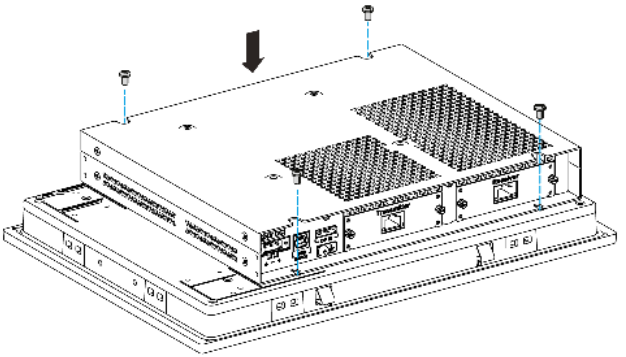
5	Install the display in the panel opening, refer to Installation of the display. *(see page 118)* 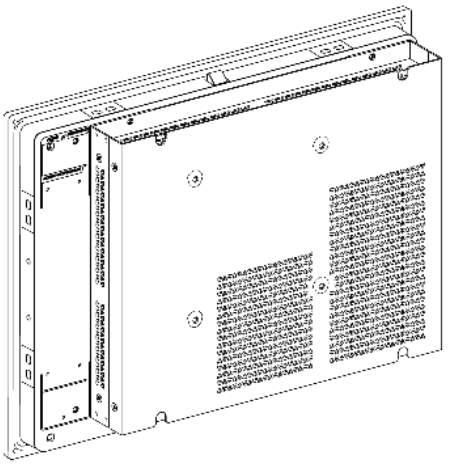
6	Do not tilt the display any more than the amount allowed by the mounting orientation requirements.

Spacing Requirements

In order to provide sufficient air circulation, mount the Display Adapter so that the spacing above, below, and on the sides of the unit is as follows:

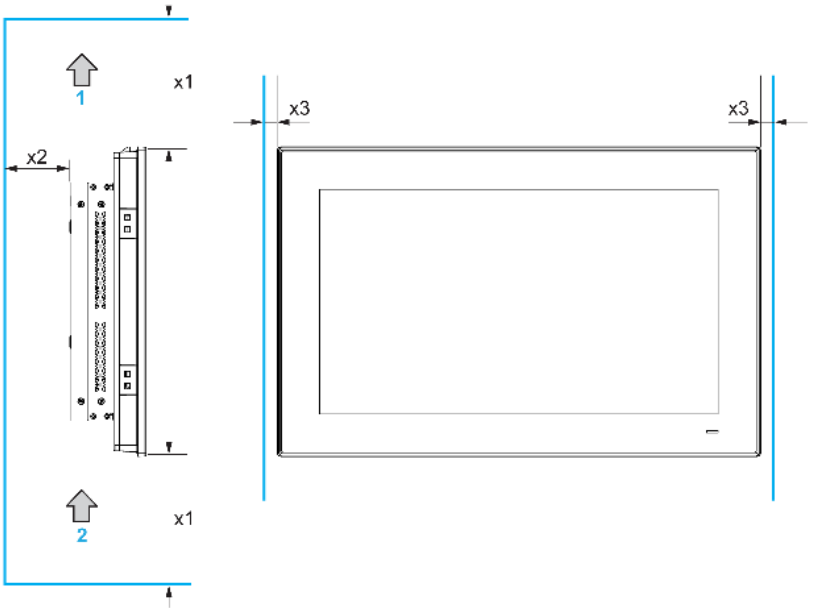

1 Air out
2 Air in
x1 > 100 mm (3.93 in)
x2 > 50 mm (1.96 in)
x3 > 15 mm (0.59 in)

Mounting Orientation

The following figure shows the allowed mounting orientation for the display with the Display Adapter:

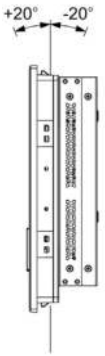

Installation of the Receiver module and the Transmitter module on Display Adapter

⚠ CAUTION

OVERTORQUE AND LOOSE HARDWARE

- Do not exert more than 0.5 Nm (4.5 lb-in) of torque when tightening the installation fastener, enclosure, accessory, or terminal block screws. Tightening the screws with excessive force can damage the installation fastener.
- When fastening or removing screws, ensure that they do not fall inside the Harmony Industrial PC chassis.

Failure to follow these instructions can result in injury or equipment damage.

Follow these steps to install the Receiver module and the Transmitter module:

Step	Action
1	Unscrew the Transmitter module and Receiver module panel covers from the Display Adapter: 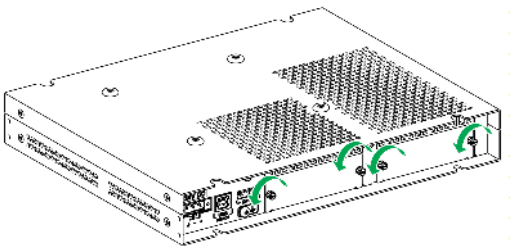

Step	Action
2	Pull the panel covers from the Display Adapter: 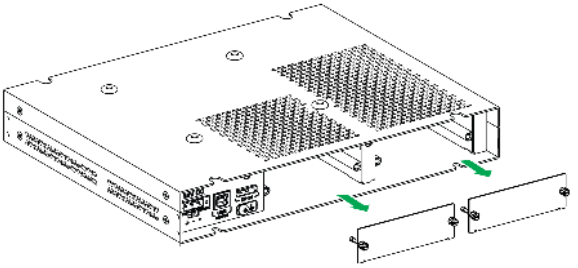
3	Insert the Transmitter module (HMIYDATR11) and Receiver module (HMIYDARE11) in the respective slots in the Display Adapter. 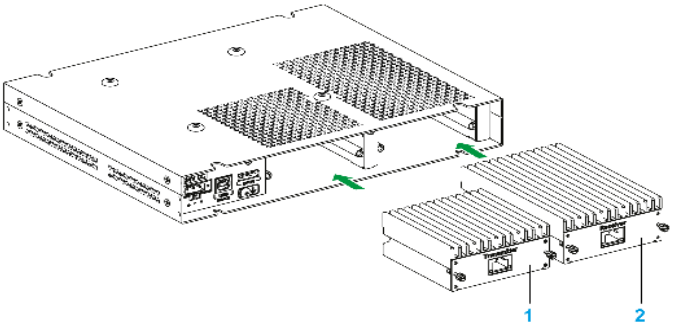 **1** Transmitter module **2** Receiver module **NOTE:** The Receiver module must be mounted before the Display Adapter mount on display.
4	Fasten the covers with screws. 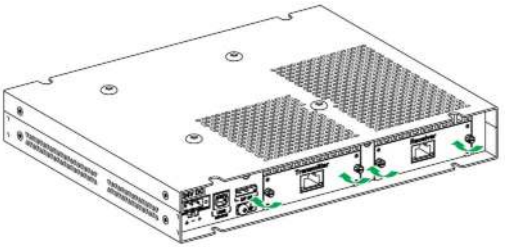
5	Install the Display Adapter on the display, refer to Installation of the display.

Installation with the VESA

Follow these steps to install the Display Adapter with the VESA:

Step	Action
1	There are four VESA holes on the rear side of the Display Adapter: 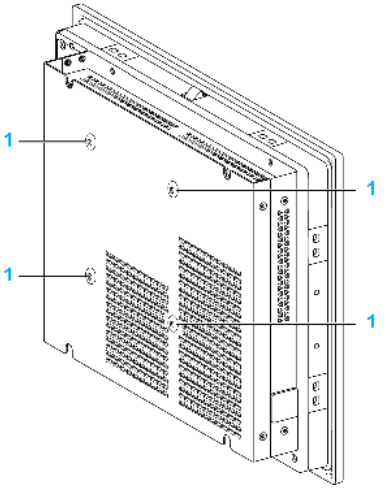 **1** VESA holes (size 100 x 100 mm (3.94 x 3.94 in))
2	Install your support in the corresponding holes as shown. Fasten the VESA support with four M4 screws (10 mm (0.39 in)). verify that the angle of the Box iPC is tilted no more than the amount allowed by the mounting orientation requirements. 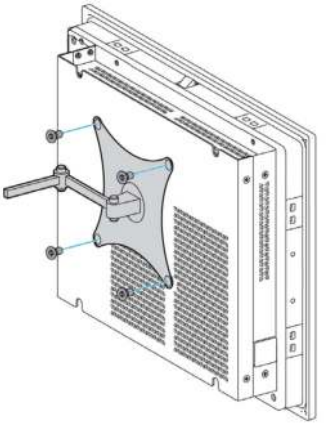 **NOTE:** The recommended torque to tighten these screws is 0.5 Nm (4.5 lb-in).

Chapter 6
Getting Started

First Power Up

License Agreement

Limitations on your usage of the Microsoft Windows Operating System are noted in Microsoft's End User License Agreement (EULA). This EULA is included on the recovery media containing the software required to reinstall the operating system. Read this document before the first power-up.

Install and customize the Schneider Electric applications (EcoStruxure Operator Terminal Expert, EcoStruxure Machine Expert, OPC Factory Server).

Windows® Embedded (WES)

The WES is a modularized version of the Windows operating system that provides increased reliability and customizations. It offers the power and familiarity of Windows in a compact, more reliable form. For more information, refer to Microsoft Windows Embedded Web page.

WES provides many tools for the customization of menus, boot screens, and dialog boxes. With WES, you can remove the Windows boot and resume animations so the screen remains black during startup. You can also remove the Windows logo from the login screen and other startup screens. Other common features of Windows include the message and dialog boxes. WES can filter these messages and keep them from appearing during run time. The developer can choose to hide any dialog box and predefine its default operation so it never displays to the user.

EWF Manager (Only on WES7)

The Harmony Box iPC operating system is installed on a memory card. This card is a rewritable CFast card.

The EWF manager (enhanced write filter manager) minimizes the number of write operations to help extend the life of the CFast card. The EWF manager loads temporary data (for example, system updates and software operations) into RAM, and does not write this information to the CFast card.

As a result, when using the EWF manager, restarting the Box iPC overwrites the modifications that you have made to the system. The following types of modifications may be overwritten if the EWF manager is active and the system is restarted:

- Newly installed applications.
- Newly installed peripherals.
- Newly created or modified user accounts.
- Network configuration modifications (such as IP addresses or default gateways).
- Operating System customizations (such as desktop background).

NOTICE

DATA AND CONFIGURATION LOSS

- Disable the EWF Manager before making any permanent changes to the hardware, software, or Operating System of the Harmony Industrial PC.
- Re-enable the EWF Manager after making permanent changes. This helps extend the operating life of the memory card.
- Back up the memory card data regularly to another storage media.

Failure to follow these instructions can result in equipment damage.

NOTE: Use Microsoft Embedded Lockdown Manager when using Windows® Embedded 8.1 Industry 64 bits MUI (Multilingual User Interface).

Enabling/Disabling the EWF Manager

You can modify the status of the EWF Manager by running the `EWFManager.exe` program located in `C:\Program Files\EWFManager\`. After running this program, restart the system for modifications to take effect. You need administrator privileges to enable and disable the EWF Manager.

Right Click from Touch Screen Interface

To access the **right-click** function from the touch screen, keep touching the screen for 2 seconds and the corresponding **right-click** function is activated (for instance, displaying the shortcut menu).

HORM WES 7

In HORM (hibernate once resume many) environment, a single hibernation file is used to restart the system repeatedly. To set a HORM environment, follow the steps below.

Make sure that **EWF** is disabled (you can use **EWFManager** tool to disable **EWF**).

Enable hibernation support (you can use the **Powercfg Command-Line** options command-line tool to enable hibernation. The command is **powercfg -h on** (default is enable).

Enable **EWF** by **EWFManager** tool. The system restarts.

Open the software that customers want to use right after the system resumes from hibernation.

Enable **HORM** by **EWFManager** tool. The system continues to use the HORM environment unless you disable HORM. You can use **EWFManager** tool to disable HORM.

NOTE: This feature is not supported by a CFast 16 GB.

HORM Windows® Embedded 8.1 Industry

In HORM environment, a single hibernation file is used to restart the system repeatedly. To set a HORM environment, follow the steps below.

Make sure that UWF is disabled (you can use **Embedded Lockdown Manager** tool to disable UWF).

Enable hibernation support (you can use the **Powercfg Command-Line** options command-line tool to enable hibernation). The command is **powercfg -h on** (default is enable).

Enable **UWF** by **Embedded Lockdown Manager** tool. The system restarts.

Open the software that customers want to use right after the system resumes from hibernation.

Enable **HORM** by **Embedded Lockdown Manager** tool.

The system continues to use the HORM environment unless you disable HORM. You can use **Embedded Lockdown Manager** tool to disable HORM.

HORM Win 10

In HORM environment, a single hibernation file is used to restart the system repeatedly. To set a HORM environment, follow the steps below.

Make sure that **UWF** is disabled (you can use **ELM** tool to disable **UWF**).

Enable hibernation support: (you can use the **Powercfg Command-Line** options command-line tool to enable hibernation. The command is **powercfg -h on** (default is enable).

Enable **UWF** by **ELM** tool. The system restarts.

Open the software that customers want to use right after the system resumes from hibernation.

Enable **HORM** by **ELM** tool. The system continues to use the HORM environment unless you disable HORM. You can use **ELM** tool to disable HORM.

Metro Interface with Windows® Embedded 8.1 Industry

The windows **Metro** (built-in apps) is enabled on latest version of Windows® Embedded 8.1 Industry. For the software applications, we recommend using the desktop version or modifying the software setting to start in desktop mode. Example: use **Internet Explorer** browser in desktop mode.

Chapter 7
Connections

Subject of This Chapter

This chapter describes the connection of the Box iPC to the main power supply. It also describes the USB ports and identifies the serial interface pin assignments.

What Is in This Chapter?

This chapter contains the following topics:

Topic	Page
Grounding	138
Connecting the DC Power Cord	143
AC Power Supply Module Description	146
Box iPC and AC Power Supply Module Installation	149
Display Adapter and AC Power Supply Module Installation	156
UPS Module - Description and Installation	162
Box iPC Interface Connections	173

Grounding

Overview

The grounding resistance between the Box iPC ground wire and the ground must be 100 Ω or less. When using a long grounding wire, check the resistance and, if required, replace the wire with a thicker wire and place it in a duct.

The table shows the maximum length for the wires:

Wire cross-section	Maximum line length
1.3 mm^2 (AWG 16)	30 m (98 ft)
	60 m (196 ft) round trip

Grounding Procedure

⚠ WARNING

UNINTENDED EQUIPMENT OPERATION

- Use only the authorized grounding configurations shown below.
- Confirm that the grounding resistance is 100 Ω or less.
- Test the quality of your ground connection before applying power to the device. Excessive noise on the ground line can disrupt operations of the Harmony Industrial PC.

Failure to follow these instructions can result in death, serious injury, or equipment damage.

The Box iPC and the Display Adapter ground have 2 connections:
- DC Supply voltage
- Ground connection pin

The Box iPC connections (common use for HMIBMU/HMIBMP/HMIBMI/HMIBMO):

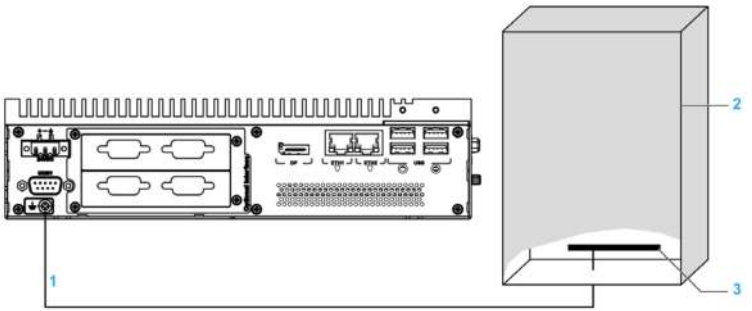

1 Ground connection pin (functional ground connection pin)
2 Switching cabinet
3 Grounding strip

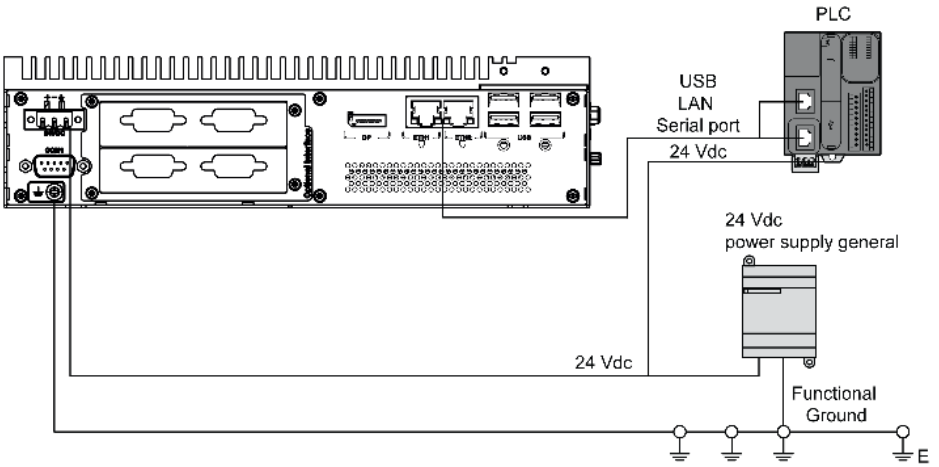

The Display Adapter connections:

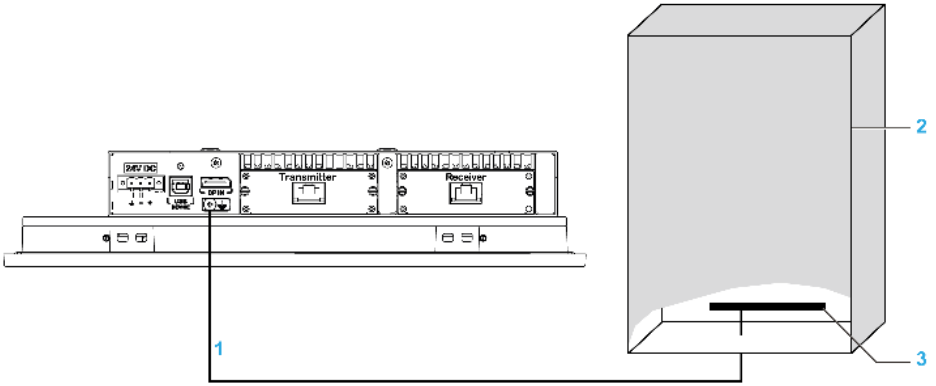

1 Ground connection pin (functional ground connection pin)
2 Switching cabinet
3 Grounding strip

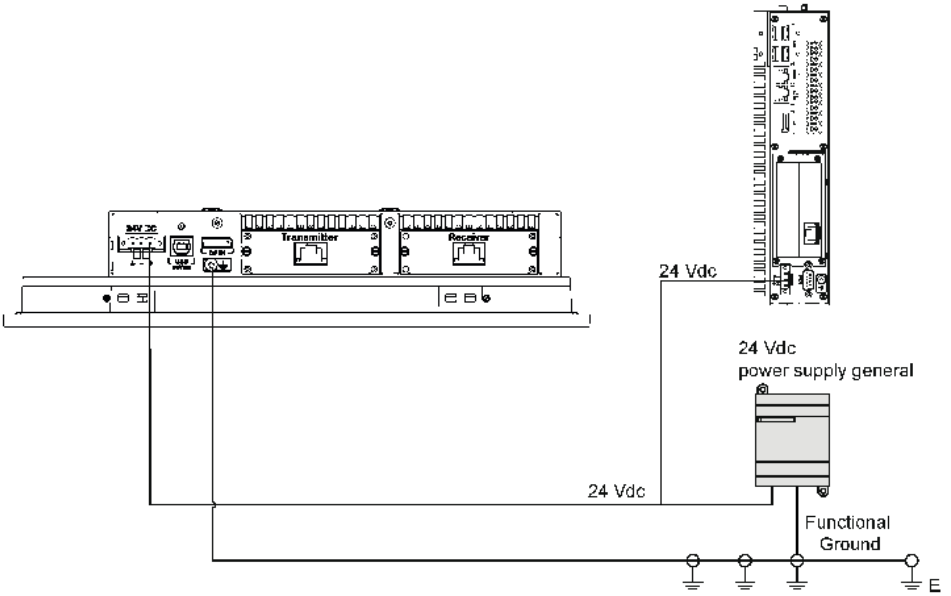

When grounding, follow this procedure:

Step	Action
1	Ensure all of the following is done for the system wiring: ● Connect the cabinet to ground. ● Ensure that all cabinets are grounded together. ● Connect the ground of the power supply to the cabinet. ● Connect the ground pin of the Box iPC to the cabinet. ● Connect the I/O to the controller if needed. ● Connect the power supply to the Box iPC.
2	Check that the grounding resistance is 100 Ω or less.
3	When connecting the SG line to another device, ensure that the design of the system/connection does not produce a ground loop. **NOTE:** The SG and ground connection screw are connected internally in the Box iPC.
4	Use 1.3 mm^2 (AWG 16) wire to make the ground connection. Create the connection point as close to the Box iPC as possible and make the wire as short as possible.

Grounding I/O Signal Lines

The Box iPC HMIBMI, HMIPCC•2L, HMIPCC•2N, HMIPCCL2B5, HMIPCCL2B6 and the displays HMIDM9521, HMIDMA521 are not certified for use in Class I Division 2 hazardous (classified) locations.

⚠ DANGER

POTENTIAL FOR EXPLOSION IN HAZARDOUS LOCATION

Do not use these products in hazardous locations.

Failure to follow these instructions will result in death or serious injury.

The HMIBMP, HMIBMU, HMIBMO, HMIPCCP2B, HMIPCCU2B, HMIPCCL2B1...4, HMIPCCL2D1...4, HMIPCCL2J1...4, HMIPCCL261...4, HMIPCCL271...4, HMIPCCU26, HMIPCCU27, HMIPCCU2D, HMIPCCU2J, HMIPCCP26, HMIPCCP27, HMIPCCP2D, HMIPCCP2J, and the Display Adapter HMIDADP11 are certified for use in Class I Division 2 hazardous (classified) location (see chapter "Certifications and Standards"). Observe the following:

⚠ WARNING

EXPLOSION HAZARD

- Always confirm the ANSI/ISA 12.12.01 and CSA C22.2 N°213 hazardous location rating of your device before installing or using it in a hazardous location.
- To power on or power off a Harmony Industrial PC installed in a Class I, Division 2 hazardous location, you must either:
  - Use a switch located outside the hazardous environment, or
  - Use a switch certified for Class I, Division 1 operation inside the hazardous area.
- Substitution of any components may impair suitability for Class I, Division 2.
- Do not connect or disconnect equipment unless power has been switched off or the area is known to be non-hazardous. This applies to all connections including power, ground, serial, parallel, network, and rear USB connections.
- Never use unshielded / ungrounded cables in hazardous locations.
- When enclosed, keep enclosure doors and openings closed at all times to avoid the accumulation of foreign matter inside the workstation.
- Do not open lid nor use the USB connectors in hazardous locations.
- Do not expose to direct sunlight or UV light source.

Failure to follow these instructions can result in death, serious injury, or equipment damage.

Electromagnetic radiation may interfere with the control communications of the Box iPC.

⚠ WARNING

UNINTENDED EQUIPMENT OPERATION

- If wiring of I/O lines near power lines or radio equipment is unavoidable, use shielded cables and ground one end of the shield to the Harmony Industrial PC ground connection screw.
- Do not wire I/O lines in proximity to power cables, radio devices, or other equipment that may cause electromagnetic interference.

Failure to follow these instructions can result in death, serious injury, or equipment damage.

Connecting the DC Power Cord

Precaution

When connecting the power cord to the power connector on the Box iPC, first ensure that the power cord is disconnected from the DC power supply.

DANGER

HAZARD OF ELECTRIC SHOCK, EXPLOSION OR ARC FLASH

- Remove all power from the device before removing any covers or elements of the system, and prior to installing or removing any accessories, hardware, or cables.
- Unplug the power cable from both the Harmony Industrial PC and the power supply.
- Always use a properly rated voltage sensing device to confirm power is off.
- Replace and secure all covers or elements of the system before applying power to the unit.
- Use only the specified voltage when operating the Harmony Industrial PC. The DC unit is designed to use 24 Vdc input.

Failure to follow these instructions will result in death or serious injury.

WARNING

EQUIPMENT DISCONNECTION OR UNINTENDED EQUIPMENT OPERATION

- Ensure that power, communication, and accessory connections do not place excessive stress on the ports. Consider the vibration in the environment.
- Securely attach power, communication, and external accessory cables to the panel or cabinet.
- Use only D-Sub 9-pin connector cables with a locking system in good condition.
- Use only commercially available USB cables.

Failure to follow these instructions can result in death, serious injury, or equipment damage.

Wiring and Connecting the Terminal Block of the Box iPC

The table below describes how to connect the power cord to the DC terminal block (common use for HMIBMU/HMIBMP/HMIBMI/HMIBMO):

Step	Action
1	Remove all power from the Box iPC and confirm that the DC power supply is disconnected from its power source.
2	Remove the terminal block from the power connector on the Box iPC and connect the power cord to the terminal block: 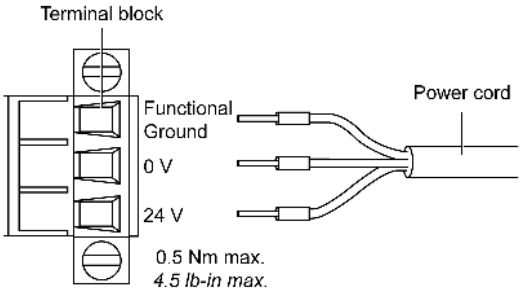 Use copper wire rated for 75 °C (167 °F) with a section of 0.75 to 2.5 mm^2 (AWG 18 to AWG 14) and use 2.5 mm^2 wire to make the ground connection.
3	Place the terminal block in the power connector and tighten the screws: 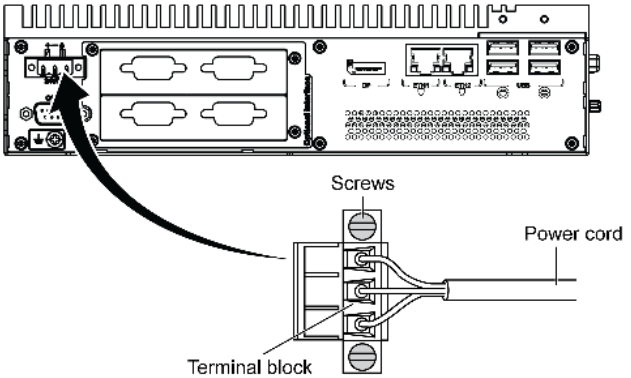 **NOTE:** The recommended torque to tighten these screws is 0.5 Nm (4.5 lb-in).

Wiring and Connecting the Terminal Block of the Display Adapter

The table below describes how to connect the power cord to the DC terminal block:

Step	Action
1	Remove all power from the Display Adapter and confirm that the DC power supply is disconnected from its power source.
2	Remove the terminal block from the power connector on the Display Adapter and connect the power cord to the terminal block: 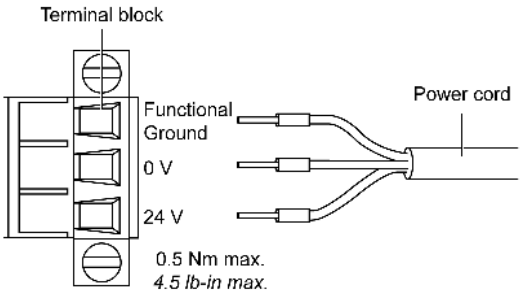 Use copper wire rated for 75 °C (167 °F) with a section of 0.75 to 2.5 mm^2 (AWG 18 to AWG 14) and use 2.5 mm^2 wire to make the ground connection.
3	Place the terminal block in the power connector and tighten the screws: 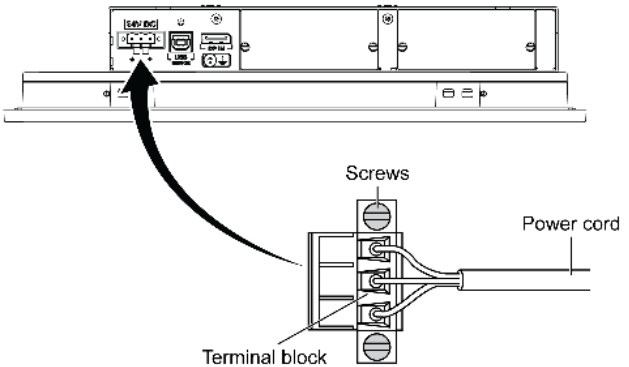 **NOTE:** The recommended torque to tighten these screws is 0.5 Nm (4.5 lb-in).

AC Power Supply Module Description

Overview

The AC power supply module (HMIYMMAC1) can optionally be mounted on the Box iPC or Display Adapter (HMIDADP11) to be operated with 100...240 Vac.

If there is not a classified hazardous location, the AC power supply module (HMIYPSOMAC1) can optionally be mounted on the Display Adapter (HMIDADP11) to be operated with 100...240 Vac.

The table shows the AC power supplies associated with the Box iPC or Display Adapter (HMIDADP11):

AC power supply	HMIBMU/HMIBMP	HMIBMI/HMIBMO	Display Adapter	Hazardous location
HMIYPSOMAC1 (60 W)	–	X	X	–
HMIYMMAC1 (100 W)	X	X	X	X

NOTE: The AC power supply module (HMIYMMAC1) must be PV 02 or above for use with Display Adapter (HMIDADP11) for hazardous locations.

AC Power Supply Module (HMIYMMAC1) Description

The figure shows the AC power supply module:

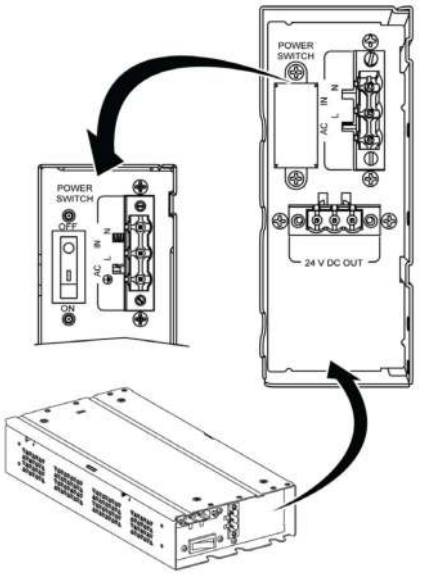

The figure shows the DC power cable of the AC power supply module:

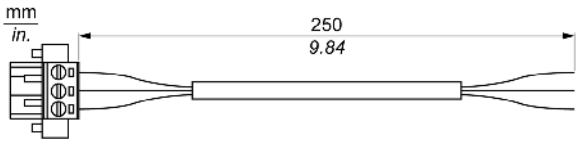

The figure shows the dimensions of the AC power supply module:

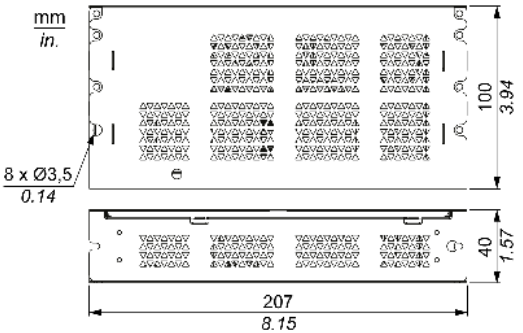

The table gives the technical data of the AC power supply module:

Features	PV01 values	PV02 values
Nominal input voltage	100...240 Vac	
Frequency	47...63 Hz	
Power switch	Yes	
Internal fuse	3.15 A	
Nominal output voltage	24 Vdc	
Output current	4.6 A maximum	5.5 A maximum
Operation temperature	0...50 °C (32...122 °F)	-20...55 °C (-4...131 °F)
Weight	0.8 kg (1.76 lb)	

NOTE: PV02 combination only with HMIBMI/HMIBMO and Display Adapter certified ATEX/C1D2.

AC Power Supply Module (HMIYPSOMAC1) Description

This figure shows the AC power supply module:

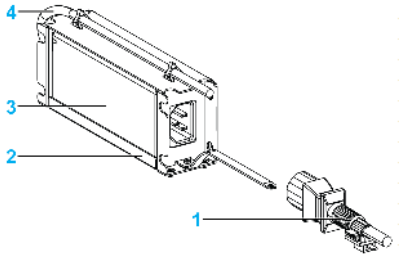

1 AC power cord
2 Mounting bracket
3 AC power supply
4 DC power cord

The table provides technical data for the AC power supply module:

Element	Characteristics
Input	90...260 Vac / 47...63 Hz / 1.6 A at 100 Vac
Output	24 Vdc / 2.62 A maximum
Inrush current	70 A at 230 Vac
Environment	
Operation temperature	0...70 °C (32...158 °F), see derating curve
Storage temperature	-40...85 °C (-40...185 °F)
Relative humidity:	0...95 %, non-condensing

Operation temperature of the AC power supply derating curve:

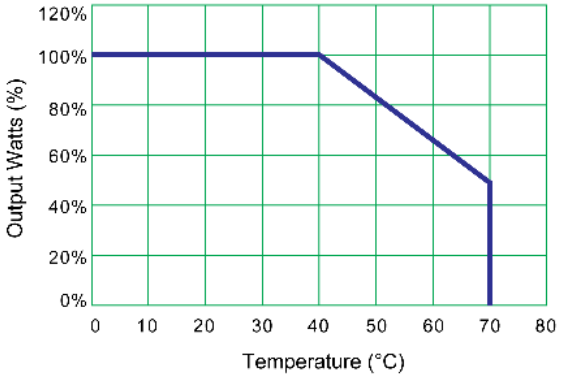

Box iPC and AC Power Supply Module Installation

Installing the AC Power Supply Module (HMIYMMAC1)

Before installing an AC power supply module (HMIYMMAC1), shut down Windows operating system in an orderly fashion and remove all power from the device.

DANGER

HAZARD OF ELECTRIC SHOCK, EXPLOSION OR ARC FLASH

- Remove all power from the device before removing any covers or elements of the system, and prior to installing or removing any accessories, hardware, or cables.
- Unplug the power cable from both the Harmony Industrial PC and the power supply.
- Always use a properly rated voltage sensing device to confirm that power is off.
- Replace and secure all covers or elements of the system before applying power to the unit.
- Use only the specified voltage when operating the Harmony Industrial PC. The AC unit is designed to use 100...240 Vac input.

Failure to follow these instructions will result in death or serious injury.

CAUTION

OVERTORQUE AND LOOSE HARDWARE

- Do not exert more than 0.5 Nm (4.5 lb-in) of torque when tightening the installation fastener, enclosure, accessory, or terminal block screws. Tightening the screws with excessive force can damage the installation fastener.
- When fastening or removing screws, ensure that they do not fall inside the Harmony Industrial PC chassis.

Failure to follow these instructions can result in injury or equipment damage.

Follow these steps when installing the AC power supply module (HMIYMMAC1):

Step	Action
1	Remove all power from the Box iPC and confirm that the power adapter has been disconnected from its power source.
2	Box iPC Universal/Performance (HMIBMU/HMIBMP): Mount the AC power supply module on the Box iPC Universal/Performance with four screws (the power switch cover and the AC IN connector have to be removed): 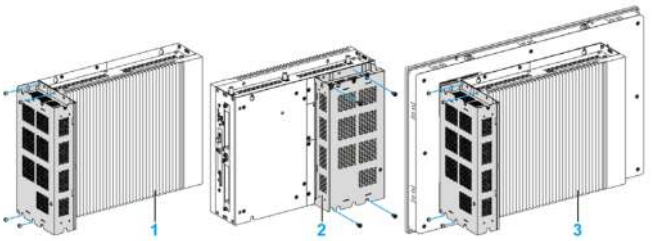 **1** Box iPC (wall mounting) without display **2** Box iPC (book mounting) without display **3** Box iPC 2-Slot with display Box iPC Optimized (HMIBMI/HMIBMO): Mount the AC power supply module on the Box iPC Optimized with two screws (the power switch cover and the AC IN connector have to be removed): 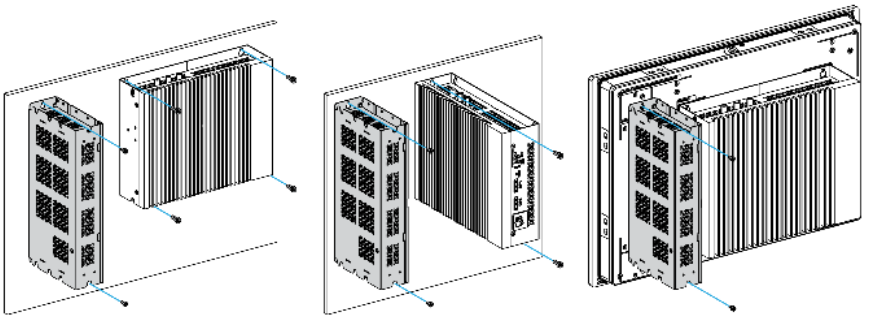 **1** Box iPC (wall mounting) without display (the AC power supply module is installed separately in the cabinet) **2** Box iPC (book mounting) without display (the AC power supply module is installed separately in the cabinet) **3** Box iPC Regular with display NOTE: ● The recommended torque to tighten these screws is 0.5 Nm (4.5 lb-in). ● To mount the Box iPC with display in the control cabinet, see Box iPC installation *(see page 115)*.

Step	Action
3	Remove the terminal block from the power connector on the Box and connect one side of the DC power cable to the terminal block: 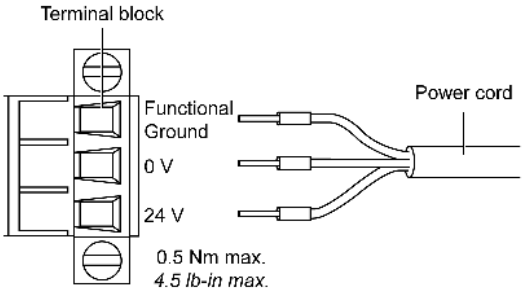
4	Place the terminal block in the power connector of the Box iPC and tighten the screws: 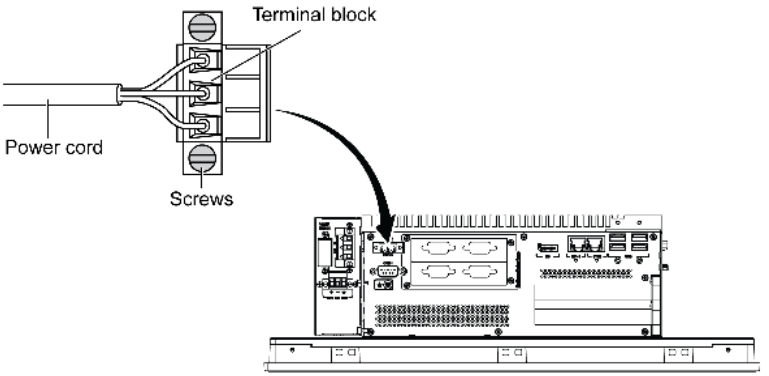 **NOTE:** The recommended torque to tighten these screws is 0.5 Nm (4.5 lb-in).

Step	Action
5	Connect the other side of DC power cable with the terminal block attached to **24 V DC OUT** of the AC power supply module and tighten the screws: 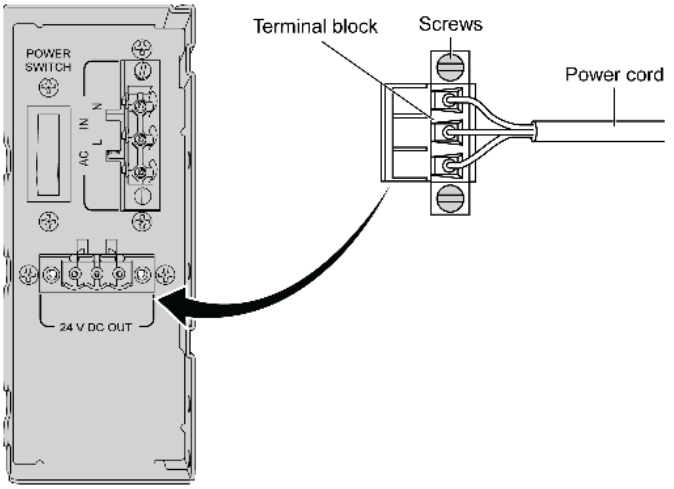 Use copper wire rated for 75 °C (167 °F) with a section of 0.75 to 2.5 mm^2 (AWG 18 to AWG 14).
6	Connect the AC power cable with the terminal block attached to **AC IN** of the AC power supply module from its power source: 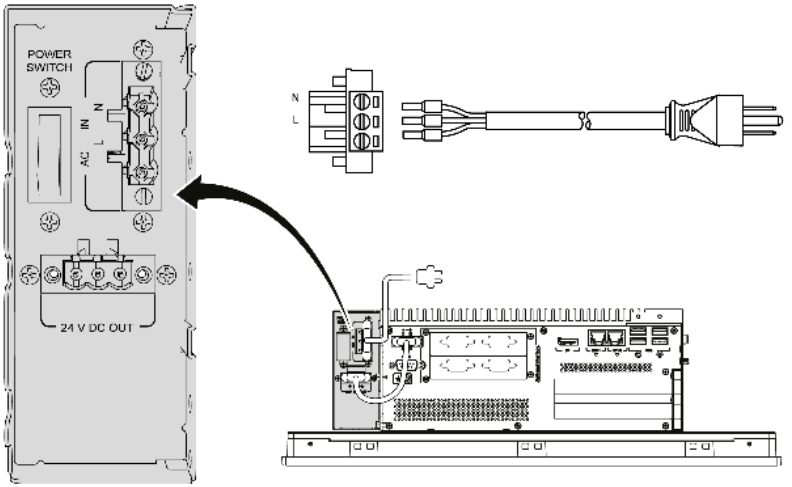

Installing the AC Power Supply Module (HMIYPSOMAC1) with the Box iPC Optimized (HMIBMI/HMIBMO)

Follow these steps when installing the AC power supply module (HMIYPSOMAC1):

Step	Action
1	Remove all power from the Box iPC Optimized and confirm that the power adapter is disconnected from its power source.
2	Box iPC Optimized without VESA kit: The AC power supply module is mounted to the Box iPC Optimized with four screws M3 x 4: 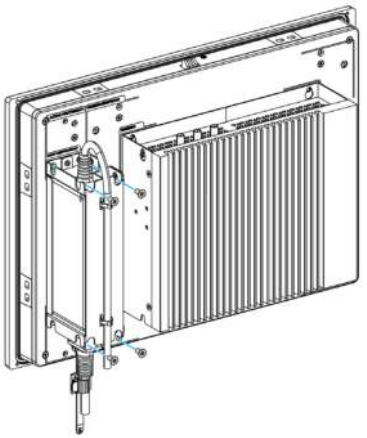 Box iPC Optimized with VESA kit: The AC power supply module is mounted to the VESA with four screws M3 x 4: 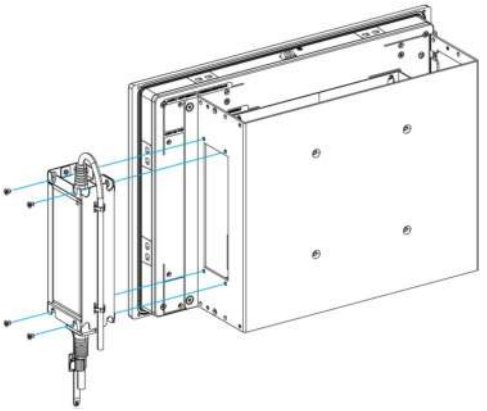 **NOTE:** The recommended torque to tighten these screws is 0.5 Nm (4.5 lb-in).

Step	Action
3	Remove the terminal block from the power connector on the Box and connect the power cord to the terminal block: 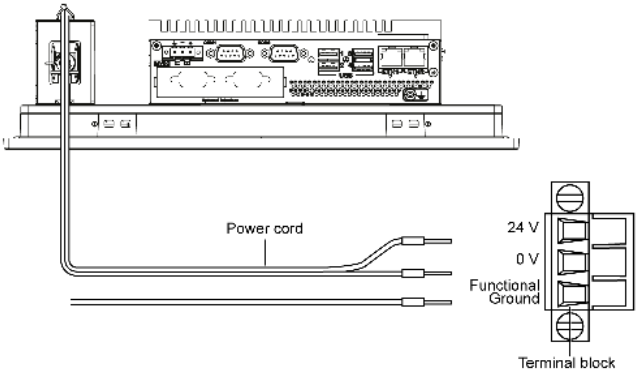 Connect the black wire with the 0 V and the red wire with the 24 V of the terminal block. Use 2.5 mm^2 copper wire to make the ground connection of the terminal block.
4	Place the terminal block in the power connector and tighten the screws: 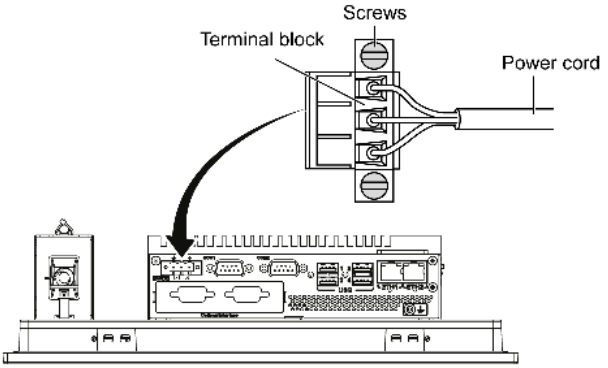 **NOTE:** The recommended torque to tighten these screws is 0.5 Nm (4.5 lb-in).

Step	Action
5	Put on the clip through the mounting bracket and the power cord together: 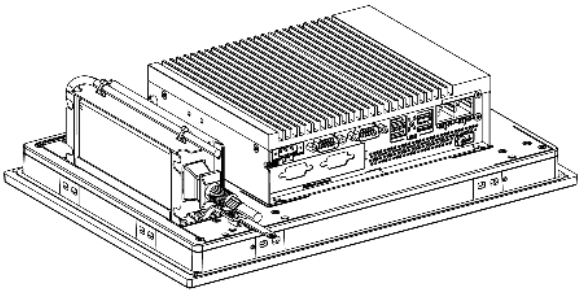 Press the clip to fasten the power cord: 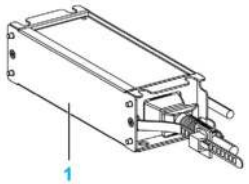 **1** Mounting bracket
6	Connect the AC power cable of the AC power supply module from its power source.

Display Adapter and AC Power Supply Module Installation

Overview

The AC power supply module (HMIYMMAC1) can optionally be mounted on Display Adapter (HMIDADP11) to be operated with 100...240 Vac.

If there is not a classified hazardous location, the AC power supply module (HMIYPSOMAC1) can optionally be mounted on the Display Adapter (HMIDADP11) to be operated with 100...240 Vac.

NOTE: The AC power supply module (HMIYMMAC1) must be PV 02 or above for use with Display Adapter (HMIDADP11) for hazardous locations.

Installing the AC Power Supply Module

Before installing an AC power supply module, shut down Windows operating system in an orderly fashion and remove all power from the device.

DANGER

HAZARD OF ELECTRIC SHOCK, EXPLOSION OR ARC FLASH

- Remove all power from the device before removing any covers or elements of the system, and prior to installing or removing any accessories, hardware, or cables.
- Unplug the power cable from both the Harmony Industrial PC and the power supply.
- Always use a properly rated voltage sensing device to confirm that power is off.
- Replace and secure all covers or elements of the system before applying power to the unit.
- Use only the specified voltage when operating the Harmony Industrial PC. The AC unit is designed to use 100...240 Vac input.

Failure to follow these instructions will result in death or serious injury.

CAUTION

OVERTORQUE AND LOOSE HARDWARE

- Do not exert more than 0.5 Nm (4.5 lb-in) of torque when tightening the installation fastener, enclosure, accessory, or terminal block screws. Tightening the screws with excessive force can damage the installation fastener.
- When fastening or removing screws, ensure that they do not fall inside the Harmony Industrial PC chassis.

Failure to follow these instructions can result in injury or equipment damage.

Installing the AC Power Supply Module (HMIYMMAC1) with the Display Adapter (HMIDADP11)

Follow these steps when installing the AC power supply module (HMIYMMAC1):

Step	Action
1	Remove all power from the Display Adapter and confirm that the power adapter has been disconnected from its power source.
2	Mount the AC power supply module on the display with two screws M3 x 6 (the power switch cover and the AC IN connector have to be removed): 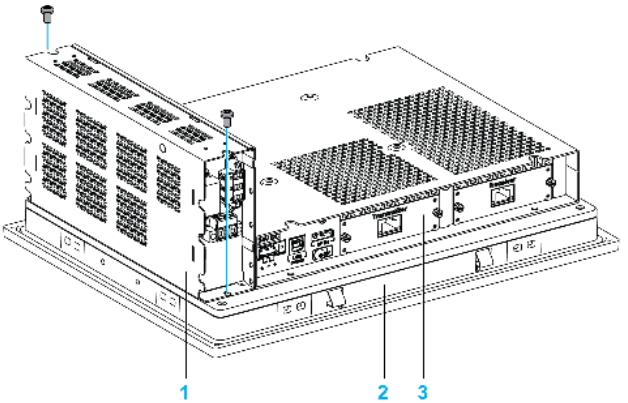 **1** AC power supply module **2** Display **3** Display Adapter **NOTE:** The recommended torque to tighten these screws is 0.5 Nm (4.5 lb-in).
3	Remove the terminal block from the power connector of the Display Adapter and connect the DC power cable to the terminal block: 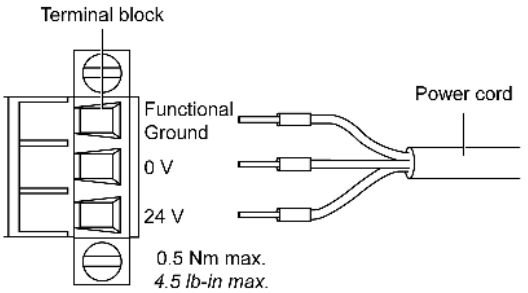 Use copper wire rated for 75 °C (167 °F) with a section of 0.75 to 2.5 mm^2 (AWG 18 to AWG 14) and use 2.5 mm^2 wire to make the ground connection.

Step	Action
4	Place the terminal block in the power connector of the Display Adapter and tighten the screws: 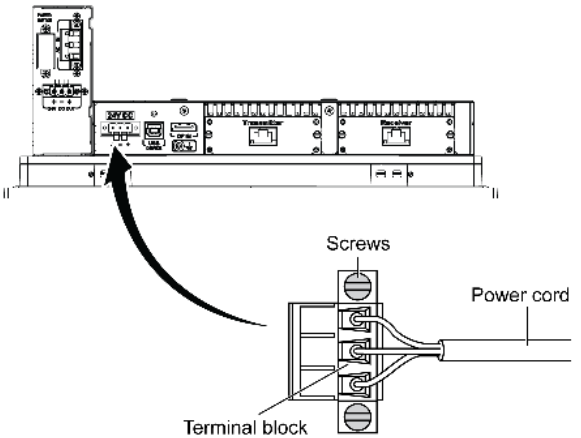 **NOTE:** The recommended torque to tighten these screws is 0.5 Nm (4.5 lb-in).
5	Connect the other side of DC power cable with the terminal block attached to **24 V DC OUT** of the AC power supply module and tighten the screws: 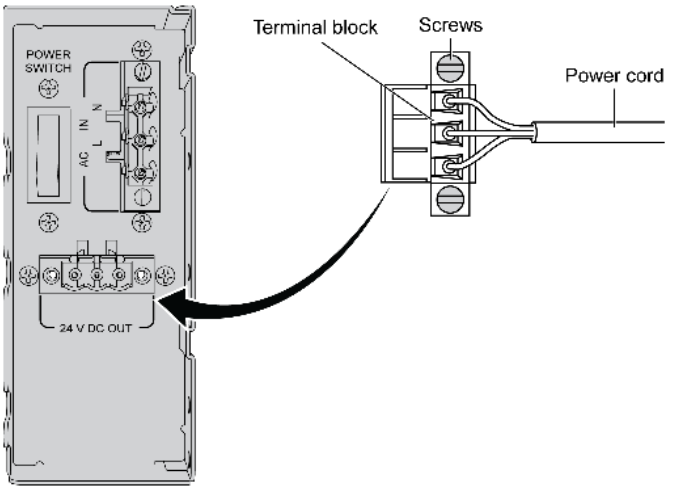 Use copper wire rated for 75 °C (167 °F) with a section of 0.75 to 2.5 mm^2 (AWG 18 to AWG 14).

Step	Action
6	Connect the AC power cable with the terminal block attached to **AC IN** of the AC power supply module from its power source: 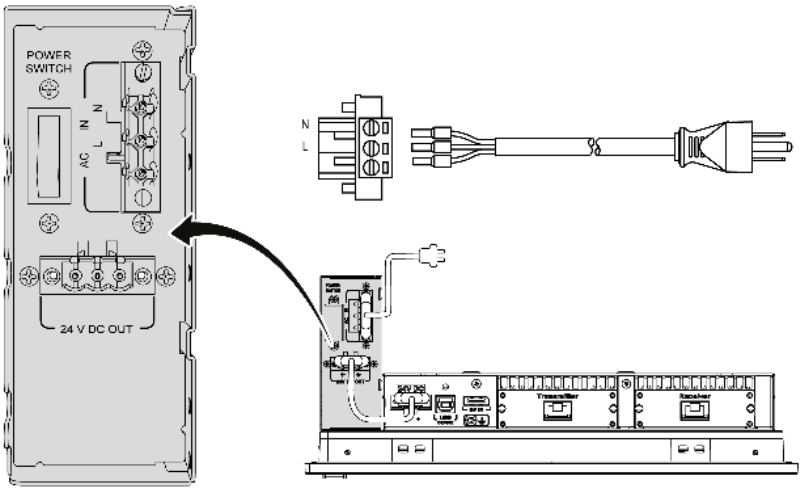
7	The display can now be mounted back in the control cabinet, see display installation *(see page 115)*.

Installing the AC Power Supply Module (HMIYPSOMAC1) with the Display Adapter (HMIDADP11)

Follow these steps when installing the AC power supply module (HMIYPSOMAC1):

Step	Action
1	Remove all power from the Display Adapter and confirm that the power adapter is disconnected from its power source.
2	The AC power supply module is mounted to the Display Adapter with four screws M3 x 4: 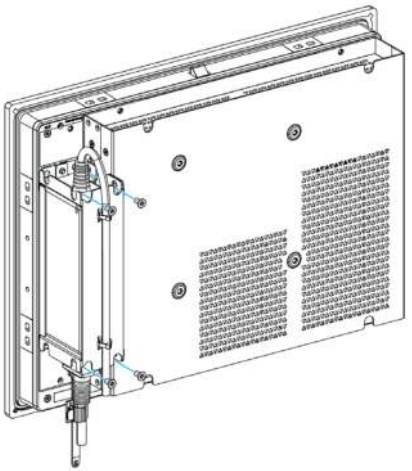 **NOTE:** The recommended torque to tighten these screws is 0.5 Nm (4.5 lb-in).
3	Remove the terminal block from the power connector and connect the power cord to the terminal block: 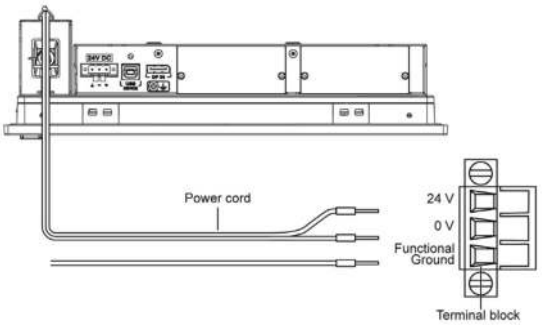 Connect the black wire with the 0 V and the red wire with the 24 V of the terminal block. Use 2.5 mm^2 copper wire to make the ground connection of the terminal block.

Step	Action
4	Place the terminal block in the power connector and tighten the screws: 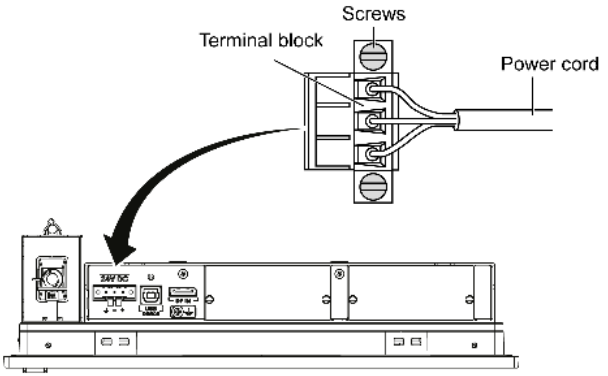 **NOTE:** The recommended torque to tighten these screws is 0.5 Nm (4.5 lb-in).
5	Put on the clip through the mounting bracket and the power cord together: 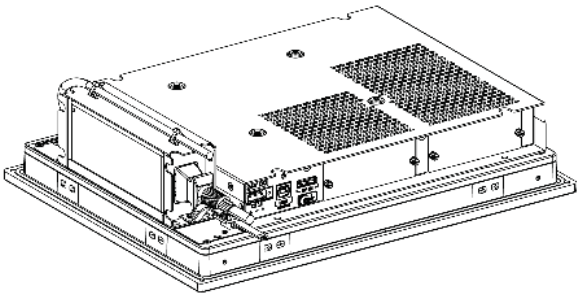 Press the clip to fasten the power cord: 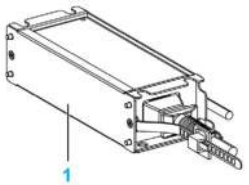 **1** Mounting bracket
6	Connect the AC power cable of the AC power supply module from its power source.

UPS Module - Description and Installation

Overview

⚠ DANGER

EXPLOSION, FIRE, OR CHEMICAL HAZARD

Handling and storage:

- Store in cool, dry and ventilated rooms with impermeable surfaces and appropriate containment in case of leakage.
- Protect from adverse weather conditions and keep separate from incompatible materials during storage and transport.
- A sufficient supply of water must be located nearby.
- Damage to containers where batteries are stored and transported must be prevented.
- Keep away from fire, sparks, and excessive heat.

Failure to follow these instructions will result in death or serious injury.

The uninterrupted power supply (UPS) option (HMIYMUPSKT1) includes a battery cell, a charger circuit, and a power path switch circuit. When battery capacity is not full, the charger circuit charges the battery cell automatically.

NOTE: The UPS must be configured and activated either with Standard System monitor or with Node-Red System Monitor.

The figure shows the UPS module:

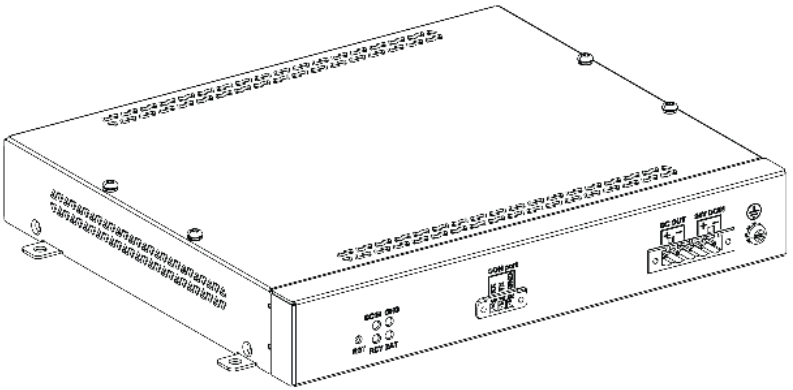

The figure shows the UPS module cables:

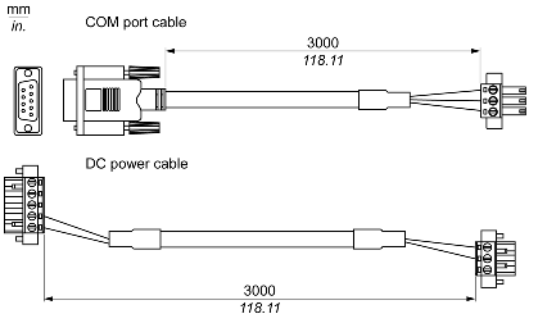

The main features of the UPS option are:
- Long-lasting, maintenance-free rechargeable batteries
- Communication via integrated interfaces

UPS Principle

With the optional UPS module, the Box iPC completes write operations even when it is turned off while write operations are being executed. When the UPS module detects a power off, it switches to battery operation immediately without interruption.

NOTE:
- The connected monitor is not handled by the UPS and shut-off when the power is exhausted.
- Only use COM1 of the Box iPC to connect to UPS module.

There are two configurations for UPS module:
- UPS module: The power source of the UPS module is from DC input power.
- UPS and AC power supply modules: The power source of the module is from AC input power.

This figure shows the UPS module (HMIYMUPSKT1) with the AC power supply module (HMIYMMAC1) and the Box iPC with the **COM port** cable and the **DC power** cable of the UPS cable kit (HMIYCABUPS31):

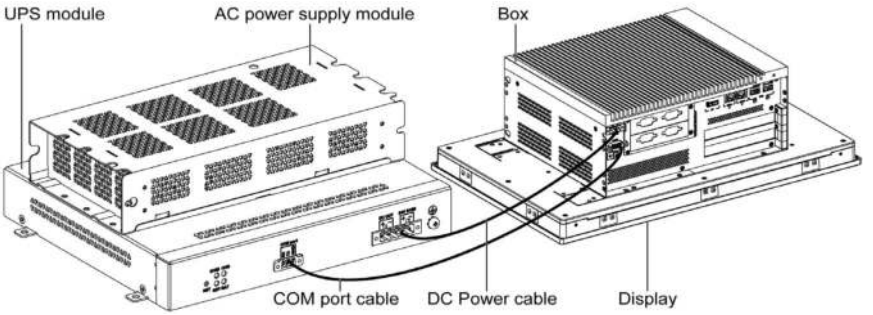

The Box iPC can get battery information from the COM port. Only COM1 can be used to detect UPS module information. The communication module of the optional interface cannot be used for UPS module; otherwise, it damages the Box iPC.

NOTICE

UNINTENDED EQUIPMENT OPERATION

- Use only COM1 port to detect UPS module information.
- Use only D-Sub 9-pin connector cables with a locking system in good condition.

Failure to follow these instructions can result in equipment damage.

The table describes the additional modules for the UPS:

Input power	UPS	Additional modules	Reference
DC	No	–	–
	Yes	UPS module / UPS cables	HMIYMUPSKT1 / HMIYCABUPS31
AC	No	AC power supply module	HMIYMMAC1
	Yes	UPS module / UPS cable and AC power supply module	HMIYMUPSKT1 / HMIYCABUPS31 and HMIYMMAC1

NOTE:
The UPS is not compatible with:
- PCIe/PCI cards and Ethernet PoE optional interface,
- PCIe/PCI cards and display.

UPS Module Description

The UPS module is subject to wear and should be replaced regularly, depending on the battery status. This information is displayed by Standard System monitor or Node-Red. The **Health** status shows when the battery needs to be changed.

NOTE: After going into backup mode, if no power is supplied during the next 5 minutes, then the UPS removes the 24 Vdc supply.

The behavior depends on the power mode setting (**AT** or **ATX**) in the Box iPC BIOS menu. The UPS sends event ask operation system shut down before backup power is exhausted.

When power is supplied to the UPS again;

- in **AT** mode, the Box iPC restarts automatically.
- in **ATX** mode, you need to push power button for system restart.

The figure shows the UPS module (HMIYMUPSKT1):

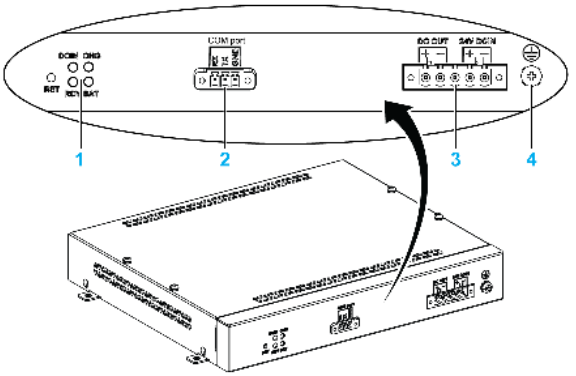

1 LEDs (**[DCIN / CHG / RDY/ BAT]**) and reset button (**[RST]**)
2 Communication port connector (**[COM port / PWR]**)
3 DC power connector (**[DC OUT / 24V DCIN]**)
4 Ground connection pin

The table describes the meaning of the status indicator:

Marking	Color	State	Meaning
DCIN	Green	ON	The input source is OK.
		1 Hz Flashing	DCIN loss up to 5 minutes.
		OFF	DCIN loss.
CHG	Green	ON	The battery of the UPS module is loading.
		0.5 Hz Flashing	The temperature of the battery is > 60 °C (remains flashing until the temperature is < 55 °C).
		1 Hz Flashing	The battery is charging.
		OFF	The battery capacity is over 90 % (charging not required).
RDY	Blue	ON	The UPS module is ready.
		OFF	The UPS module is not functioning.
BAT	Yellow	0.5 Hz Flashing	The temperature of the battery is > 60 °C (remains flashing until the temperature is < 55 °C) or less than 15 % charge.
		OFF	The battery is not detected.

NOTE: The button RST is used to reset the UPS module.

The table shows the technical data of the UPS module:

Features	Values
UPS	
Input voltage	18...36 Vdc
Output voltage	24 Vdc
Output current	3 A
Communication port	COM port / RS-232
Back-up time	10 minutes (battery 70 % fulled)
Operating temperature	0...45 °C (32...113 °F)
Mounting	Desktop mount
Battery cells	
Capacity:	27.5 Wh (2.73 Ah, 4S1P)
Maximum discharger current	9 A (if discharged at high rate and high temperature frequently, the battery life will be shortened)
Charging current (max)	1 A
Operating voltage	12...16 Vdc
Cycle life of recharging	300 times

Features	Values
Operating temperature	Charge: 0...45 °C (32...113 °F) Discharge: 0...60 °C (32...140 °F)
Typical recharge time at low battery	4 hours
Weight	1.15 Kg (2.53 lbs)

The figure shows the dimensions of the UPS module (HMIYMUPSKT1) equipped with the optional AC power supply module (HMIYMMAC1):

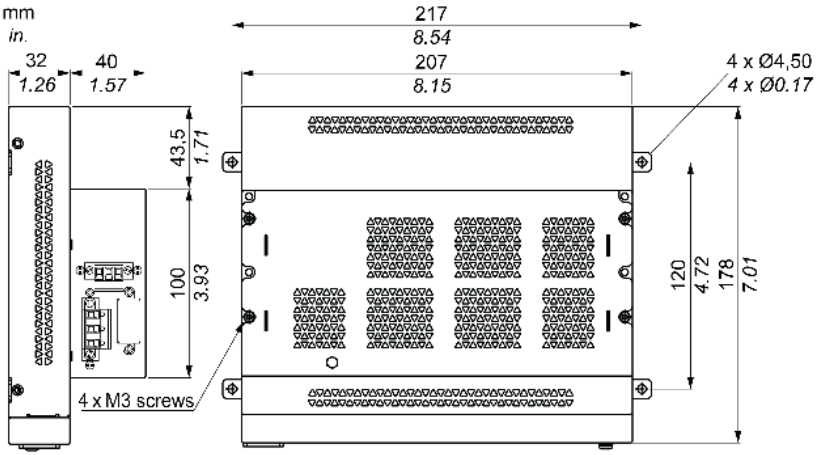

Installing Instructions

Before installing the UPS system, shut down Windows operating system in an orderly fashion and remove the power from the device.

DANGER

HAZARD OF ELECTRIC SHOCK, EXPLOSION OR ARC FLASH

- Remove all power from the device before removing any covers or elements of the system, and prior to installing or removing any accessories, hardware, or cables.
- Unplug the power cable from both the Harmony Industrial PC and the power supply.
- Always use a properly rated voltage sensing device to confirm that power is off.
- Replace and secure all covers or elements of the system before applying power to the unit.
- Use only the specified voltage when operating the Harmony Industrial PC. The AC unit is designed to use 100...240 Vac input. The DC unit is designed to use 24 Vdc input. Always check whether your device is AC or DC powered before applying power.

Failure to follow these instructions will result in death or serious injury.

CAUTION

OVERTORQUE AND LOOSE HARDWARE

- Do not exert more than 0.5 Nm (4.5 lb-in) of torque when tightening the installation fastener, enclosure, accessory, or terminal block screws. Tightening the screws with excessive force can damage the installation fastener.
- When fastening or removing screws, ensure that they do not fall inside the Harmony Industrial PC chassis.

Failure to follow these instructions can result in injury or equipment damage.

By adding the charging circuit in the Box iPC housing, installation is reduced to merely attaching the connection cable to the UPS module mounted next to the Box iPC.

NOTE: Due to the construction of these batteries, you can store and operate the UPS module in any position.

Follow the steps when installing the UPS module equipped with the optional AC power supply module (common use for HMIBMU/HMIBMP/HMIBMI/HMIBMO):

Step	Action
1	Disconnect the power supply of the Box iPC.
2	Touch the housing or ground connection (not the power supply) to discharge any electrostatic charge from your body.
3	Mount the AC power supply module on the UPS module with the four screws supplied: 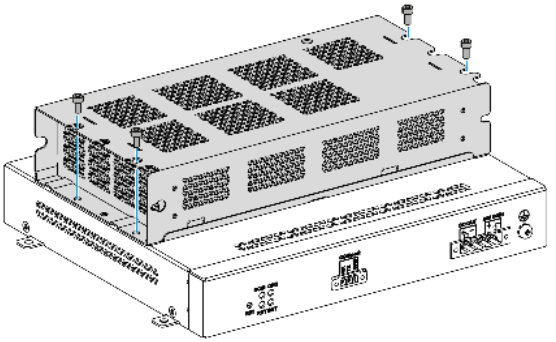
4	Install the UPS module (HMIYMUPSKT1). The installation requires four M4 screws: 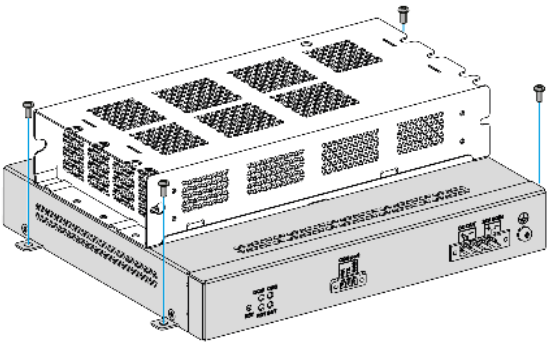
5	Connect the two UPS cables (HMIYCABUPS31) to the UPS module. Be sure to use the correct connection terminals.

Step	Action
6	Connect the DC power cable of the UPS module to the DC power connector of the Box iPC Connect the COM port cable of the UPS module to the **[COM1]** port of the Box iPC: 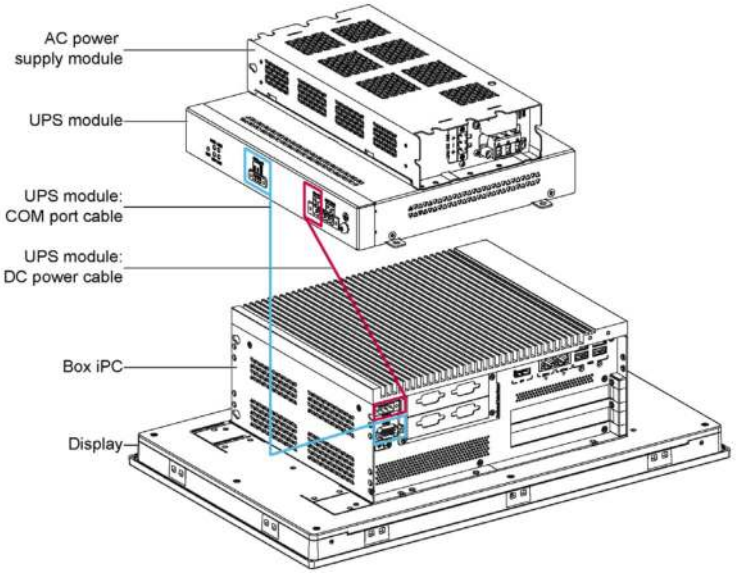 Tighten the connected cables in the screw clamps.
7	Connect the AC power supply module (**[24V DCOUT]**) to the DC power cable (**[24V DCIN]**) of the UPS module: 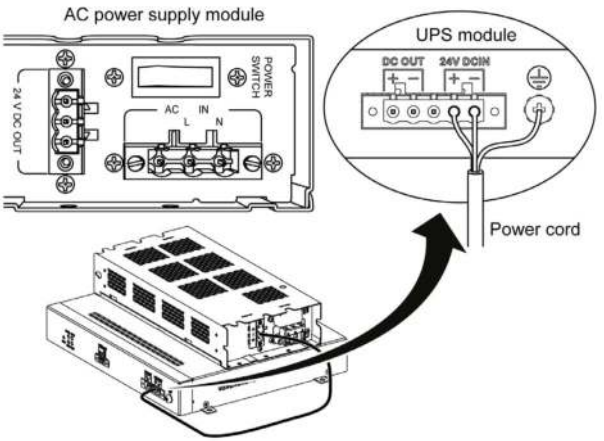

Step	Action
8	Connect the AC power cable ([AC IN]) of the AC power supply module: 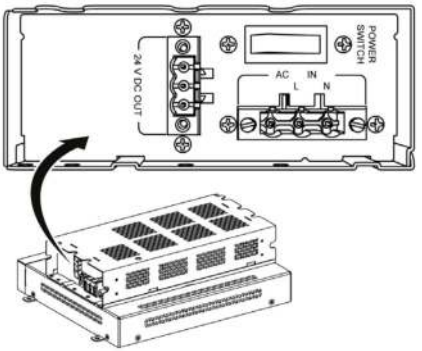

Follow the steps when installing the UPS module without the optional AC power supply module (common use for HMIBMU/HMIBMP/HMIBMI/HMIBMO):

Step	Action
1	Disconnect the power supply of the Box iPC.
2	Touch the housing or ground connection (not the power supply) to discharge any electrostatic charge from your body.
3	Install the UPS module (HMIYMUPSKT1). The installation requires four x M5 screws and four washers. Connect the two UPS cables (HMIYCABUPS31) to the UPS module. Connect the DC power cable to the DC power connector of the Box iPC and connect the communication cable (COM port) to the COM1 port RS-232 of the Box iPC: 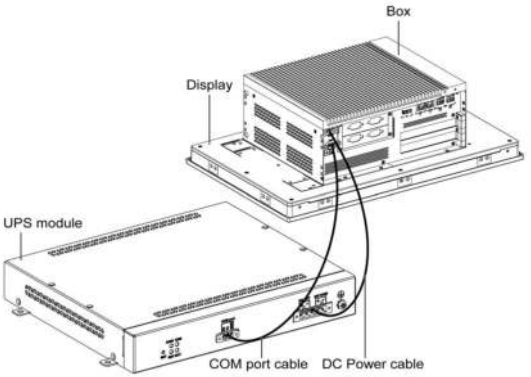 Tighten the connected cables in the screw clamps.

Step	Action
4	Connect the DC power supply (**[24V DCIN]**) of the UPS module from its power source: 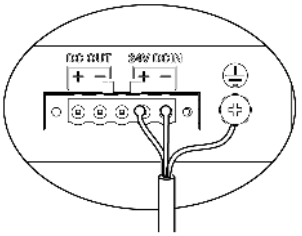

Box iPC Interface Connections

Introduction

The Box iPC HMIBMI, HMIPCC•2L, HMIPCC•2N, HMIPCCL2B5, HMIPCCL2B6 and the displays HMIDM9521, HMIDMA521 are not certified for use in Class I Division 2 hazardous (classified) locations.

⚠ DANGER

POTENTIAL FOR EXPLOSION IN HAZARDOUS LOCATION

Do not use these products in hazardous locations.

Failure to follow these instructions will result in death or serious injury.

The HMIBMP, HMIBMU, HMIBMO, HMIPCCP2B, HMIPCCU2B, HMIPCCL2B1...4, HMIPCCL2D1...4, HMIPCCL2J1...4, HMIPCCL261...4, HMIPCCL271...4, HMIPCCU26, HMIPCCU27, HMIPCCU2D, HMIPCCU2J, HMIPCCP26, HMIPCCP27, HMIPCCP2D, HMIPCCP2J, and the Display Adapter HMIDADP11 are certified for use in Class I Division 2 hazardous (classified) location (see chapter "Certifications and Standards"). Observe the following:

⚠ WARNING

EXPLOSION HAZARD

- Always confirm the ANSI/ISA 12.12.01 and CSA C22.2 N°213 hazardous location rating of your device before installing or using it in a hazardous location.
- To power on or power off a Harmony Industrial PC installed in a Class I, Division 2 hazardous location, you must either:
  - Use a switch located outside the hazardous environment, or
  - Use a switch certified for Class I, Division 1 operation inside the hazardous area.
- Substitution of any components may impair suitability for Class I, Division 2.
- Do not connect or disconnect equipment unless power has been switched off or the area is known to be non-hazardous. This applies to all connections including power, ground, serial, parallel, network, and rear USB connections.
- Never use unshielded / ungrounded cables in hazardous locations.
- When enclosed, keep enclosure doors and openings closed at all times to avoid the accumulation of foreign matter inside the workstation.
- Do not open lid nor use the USB connectors in hazardous locations.
- Do not expose to direct sunlight or UV light source.

Failure to follow these instructions can result in death, serious injury, or equipment damage.

⚠ WARNING

EQUIPMENT DISCONNECTION OR UNINTENDED EQUIPMENT OPERATION

- Ensure that power, communication, and accessory connections do not place excessive stress on the ports. Consider the vibration in the environment.
- Securely attach power, communication, and external accessory cables to the panel or cabinet.
- Use only D-Sub 9-pin connector cables with a locking system in good condition.
- Use only commercially available USB cables.

Failure to follow these instructions can result in death, serious injury, or equipment damage.

Serial Interface Connections

This interface is used to connect the Box iPC to remote equipment, via a serial interface cable. The connector is a D-Sub 9-pin plug connector.

By using a long PLC cable to connect to the Box iPC, it is possible that the cable can be at a different electrical potential than the panel, even if both are connected to ground.

NOTE: The Box iPC can get UPS information from COM port. Only COM1 can be used to detect UPS module information (HMIYMUPSKT1). The communication module of the optional interface cannot use for UPS module; otherwise, it damages the Box iPC.

⚠ DANGER

ELECTRIC SHOCK

- Make a direct connection between the ground connection screw and ground.
- Do not connect other devices to ground through the ground connection screw of this device.
- Install all cables according to local codes and requirements. If local codes do not require grounding, follow a reliable guide such as the US National Electrical Code, Article 800.

Failure to follow these instructions will result in death or serious injury.

The table shows the D-Sub 9-pin assignments (COM1):

Pin	Assignment			D-Sub 9-pin plug connector
	RS-232	RS-422	RS-485	
1	DCD	TxD-	Data-	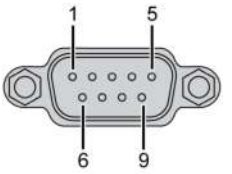
2	RxD	TxD+	Data+	
3	TxD	RxD+	N/A	
4	DTR	RxD-	N/A	
5	GND	GND	GND	
6	DSR	N/A	N/A	
7	RTS	N/A	N/A	
8	CTS	N/A	N/A	
9	RI	N/A	N/A	

Any excessive weight or stress on communication cables may disconnect the equipment.

NOTE:

- Adjust the serial port configuration with DIP switch (common use for HMIBMU/HMIBMP). You can select RS-232, RS-422/485. The RS-485 port is designed with auto data flow control capability and automatically detects the data flow direction.
- The Box iPC Optimized has not a switch to set the RS-232, RS-422/485 mode. Use the BIOS for the setting.

NOTE: To achieve Modbus through RS-485 COM port with Schneider Electric device, do not use standard Schneider Electric cable. Follow wiring diagram above to create a convenient cable depending on the remote device to connect to any peripheral interface.

The figure shows the position of the SW1 for the Box iPC Universal/Performance:

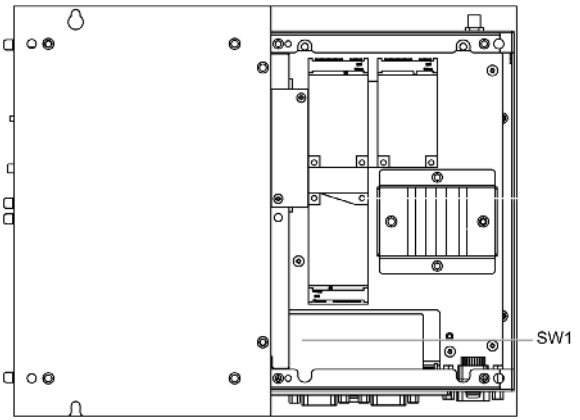

The table describes the RS-232, RS-422/485 mode settings for the COM1:

Mode	SW1
RS-232 mode	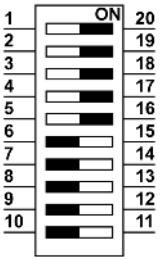
RS-422 master mode	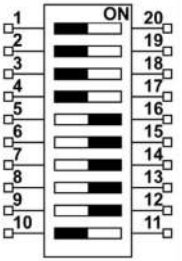
RS-422 slave mode	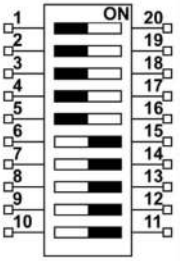

Mode	SW1
RS-485 mode	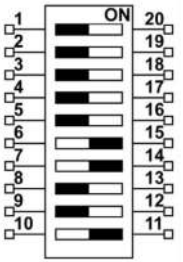

NOTE: The RS-422 creates point-to-multipoint connections. In a point-to-multipoint arrangement, the node originating the data (master) can broadcast data to several (slave) nodes at once. RS-422 can be configured as master mode or slave mode for networking. A master/slave system has one master node that sends commands to each of the slave nodes and processes the responses. Slave nodes do not typically transmit data without a request from the master node, and do not communicate with each other. Each slave must have a unique address so that it can be addressed independently of other nodes.

RJ45 Connector Status LEDs

The figure shows the RJ45 connector status LEDs:

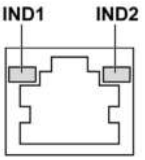

The table describes the RJ45 connector status LED:

Label	Description	LED		
		Color	Status	Description
IND1	Ethernet link	Green/Yellow	Off	Link at 10 Mb/s
			Solid yellow	Link at 100 Mb/s
			Solid green	Activity at 1000 Mb/s
IND2	Ethernet activity	Green	Off	No activity
			On	Transmitting or receiving data

Chapter 8
Hardware Modifications

Subject of This Chapter

This chapter describes the hardware modifications for the Harmony Box iPC.

What Is in This Chapter?

This chapter contains the following sections:

Section	Topic	Page
8.1	Before Modifications	180
8.2	Box iPC and Storage Modifications	183
8.3	Box iPC Universal and Performance Fan Kit Installation	207
8.4	Optional Cards and Optional Interfaces	209

Section 8.1
Before Modifications

Before Making Modifications

Introduction

For detailed installation procedures for optional units, refer to the OEM (original equipment manufacturer) Installation guide included with the optional unit.

DANGER

HAZARD OF ELECTRIC SHOCK, EXPLOSION OR ARC FLASH

- Remove all power from the device before removing any covers or elements of the system, and prior to installing or removing any accessories, hardware, or cables.
- Unplug the power cable from both the Harmony Industrial PC and the power supply.
- Always use a properly rated voltage sensing device to confirm power is off.
- Replace and secure all covers or elements of the system before applying power to the unit.
- Use only the specified voltage when operating the Harmony Industrial PC. The DC unit is designed to use 24 Vdc input.

Failure to follow these instructions will result in death or serious injury.

The Box iPC HMIBMI, HMIPCC•2L, HMIPCC•2N, HMIPCCL2B5, HMIPCCL2B6 and the displays HMIDM9521, HMIDMA521 are not certified for use in Class I Division 2 hazardous (classified) locations.

DANGER

POTENTIAL FOR EXPLOSION IN HAZARDOUS LOCATION

Do not use these products in hazardous locations.

Failure to follow these instructions will result in death or serious injury.

The HMIBMP, HMIBMU, HMIBMO, HMIPCCP2B, HMIPCCU2B, HMIPCCL2B1...4, HMIPCCL2D1...4, HMIPCCL2J1...4, HMIPCCL261...4, HMIPCCL271...4, HMIPCCU26, HMIPCCU27, HMIPCCU2D, HMIPCCU2J, HMIPCCP26, HMIPCCP27, HMIPCCP2D, HMIPCCP2J, and the Display Adapter HMIDADP11 are certified for use in Class I Division 2 hazardous (classified) location (see chapter "Certifications and Standards"). Observe the following:

⚠ WARNING

EXPLOSION HAZARD

- Always confirm the ANSI/ISA 12.12.01 and CSA C22.2 N°213 hazardous location rating of your device before installing or using it in a hazardous location.
- To power on or power off a Harmony Industrial PC installed in a Class I, Division 2 hazardous location, you must either:
  - Use a switch located outside the hazardous environment, or
  - Use a switch certified for Class I, Division 1 operation inside the hazardous area.
- Substitution of any components may impair suitability for Class I, Division 2.
- Do not connect or disconnect equipment unless power has been switched off or the area is known to be non-hazardous. This applies to all connections including power, ground, serial, parallel, network, and rear USB connections.
- Never use unshielded / ungrounded cables in hazardous locations.
- When enclosed, keep enclosure doors and openings closed at all times to avoid the accumulation of foreign matter inside the workstation.
- Do not open lid nor use the USB connectors in hazardous locations.
- Do not expose to direct sunlight or UV light source.

Failure to follow these instructions can result in death, serious injury, or equipment damage.

During operation, the surface temperature of the heat sink may exceed 70 °C (158 °F).

⚠ WARNING

RISK OF BURNS

Do not touch the surface of the heat sink during operation.

Failure to follow these instructions can result in death, serious injury, or equipment damage.

⚠ CAUTION

OVERTORQUE AND LOOSE HARDWARE

- Do not exert more than 0.5 Nm (4.5 lb-in) of torque when tightening the installation fastener, enclosure, accessory, or terminal block screws. Tightening the screws with excessive force can damage the installation fastener.
- When fastening or removing screws, ensure that they do not fall inside the Harmony Industrial PC chassis.

Failure to follow these instructions can result in injury or equipment damage.

⚠ CAUTION

STATIC SENSITIVE COMPONENTS

Harmony Industrial PC Internal components, including accessories such as RAM modules and expansion boards, can be damaged by static electricity.

- Keep static-producing materials (plastic, upholstery, carpeting) out of the immediate work area.
- Do not remove ESD-sensitive components from their anti-static bags until you are ready to install them.
- When handling static-sensitive components, wear a properly grounded wrist strap (or equivalent).
- Avoid unnecessary contact with exposed conductors and component leads with skin or clothing.

Failure to follow these instructions can result in injury or equipment damage.

Section 8.2
Box iPC and Storage Modifications

Overview

This section shows the installation of the HDD/SSD drives, the CFast card and the mSATA card.

What Is in This Section?

This section contains the following topics:

Topic	Page
Box iPC Optimized (HMIBMO) M.2 Card Installation	184
Box iPC Optimized (HMIBMO Expandable) HDD/SSD Drive Installation	187
Box iPC Universal and Performance (HMIBMU/HMIBMP) CFast Card Installation	192
Box iPC Universal and Performance (HMIBMU/HMIBMP) mSATA Card Installation	195
Box iPC Universal and Performance (HMIBMU/HMIBMP) mini PCIe and PCI/PCIe Card Installation	199
Box iPC Universal and Performance (HMIBMU/HMIBMP) HDD/SSD Drive Installation	204

Box iPC Optimized (HMIBMO) M.2 Card Installation

Introduction

The Box iPC Optimized supports a M.2 card slot. The Box iPC Optimized is designed for one M.2 slot and it provides 3.3 Vdc with max 2.5 A. The M.2 card size is W22 mm x L42 mm (0.87 in x 1.65 in).

M.2 type 2242 (mini PCIe full size):

Before installing or removing a M.2 card, shutdown Windows operating system in an orderly fashion and remove all power from the device.

DANGER

HAZARD OF ELECTRIC SHOCK, EXPLOSION OR ARC FLASH

- Remove all power from the device before removing any covers or elements of the system, and prior to installing or removing any accessories, hardware, or cables.
- Unplug the power cable from both the Harmony Industrial PC and the power supply.
- Always use a properly rated voltage sensing device to confirm that power is off.
- Replace and secure all covers or elements of the system before applying power to the unit.
- Use only the specified voltage when operating the Harmony Industrial PC. The AC unit is designed to use 100...240 Vac input. The DC unit is designed to use 24 Vdc input. Always check whether your device is AC or DC powered before applying power.

Failure to follow these instructions will result in death or serious injury.

⚠ CAUTION

MEMORY CARD DAMAGE AND DATA LOSS

- Remove all power before making any contact with an installed memory card.
- Use only memory cards sold by Schneider Electric as accessory for this product. The performance of the Harmony Industrial PC has not been tested using memory cards from other manufacturers.
- Confirm that the memory card is correctly oriented before insertion.
- Do not bend, drop, or strike the memory card.
- Do not touch the memory card connectors.
- Do not disassemble or modify the memory card.
- Keep the memory card dry.

Failure to follow these instructions can result in injury or equipment damage.

NOTICE

ELECTROSTATIC DISCHARGE

Take the necessary protective measures against electrostatic discharge before attempting to remove the Harmony Industrial PC cover.

Failure to follow these instructions can result in equipment damage.

⚠ CAUTION

OVERTORQUE AND LOOSE HARDWARE

- Do not exert more than 0.5 Nm (4.5 lb-in) of torque when tightening the installation fastener, enclosure, accessory, or terminal block screws. Tightening the screws with excessive force can damage the installation fastener.
- When fastening or removing screws, ensure that they do not fall inside the Harmony Industrial PC chassis.

Failure to follow these instructions can result in injury or equipment damage.

M.2 Card Installation

The table describes how to install a M.2 card:

Step	Action
1	Disconnect the power cord to the Box iPC.
2	Touch the housing or ground connection (not the power supply) to discharge any electrostatic charge from your body.
3	Unscrew the four screws from the cover: 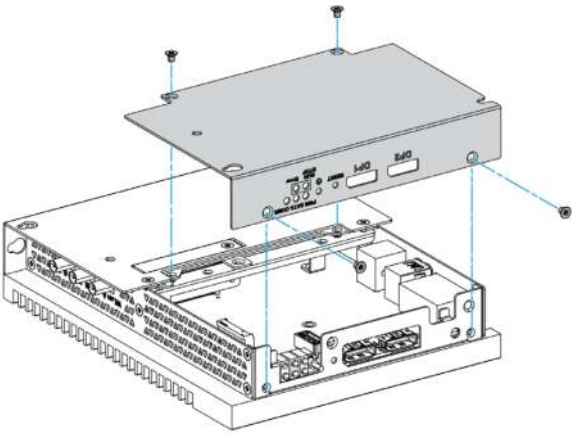
4	Insert the M.2 card into the expansion card connector and fasten it with one screw: 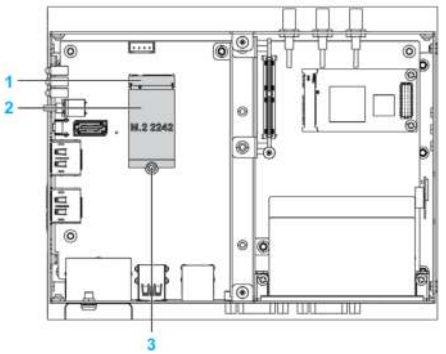 **1** Expansion card connector **2** M.2 card **3** Screw size M2 (included in accessory Box iPC) **NOTE:** The recommended torque to tighten these screws is 0.5 Nm (4.5 lb-in).
5	Replace the cover and fasten it with four screws.

Box iPC Optimized (HMIBMO Expandable) HDD/SSD Drive Installation

Overview

The Box iPC supports three types of SATA devices and two SATA ports.The table shows the SATA device configuration:

SATA port	SATA device	SATA speed
Port 1	HDD/SSD	6 Gb/s; 3 Gb/s; 1.5 Gb/s
Port 2	M.2	

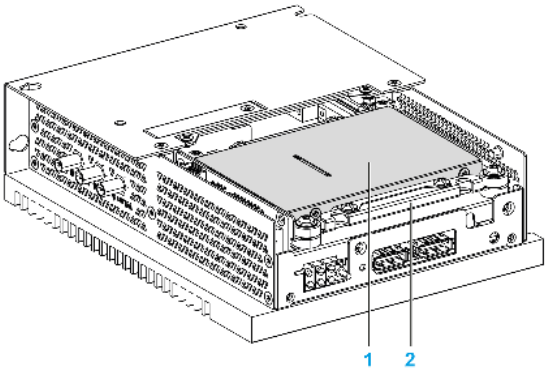

1 HDD/SSD
2 HDD/SSD adapter (HMIYBADHDDBMO1)

HDD/SSD Drive Installation

NOTICE

ELECTROSTATIC DISCHARGE

Take the necessary protective measures against electrostatic discharge before attempting to remove the Harmony Industrial PC cover.

Failure to follow these instructions can result in equipment damage.

⚠ CAUTION

OVERTORQUE AND LOOSE HARDWARE

- Do not exert more than 0.5 Nm (4.5 lb-in) of torque when tightening the installation fastener, enclosure, accessory, or terminal block screws. Tightening the screws with excessive force can damage the installation fastener.
- When fastening or removing screws, ensure that they do not fall inside the Harmony Industrial PC chassis.

Failure to follow these instructions can result in injury or equipment damage.

NOTE: Remove all power before attempting this procedure.

This table describes how to install an HDD/SSD drive:

Step	Action
1	Disconnect the power cord to the Box iPC.
2	Touch the housing or ground connection (not the power supply) to discharge any electrostatic charge from your body.
3	Remove the four screws of the cover and remove it: 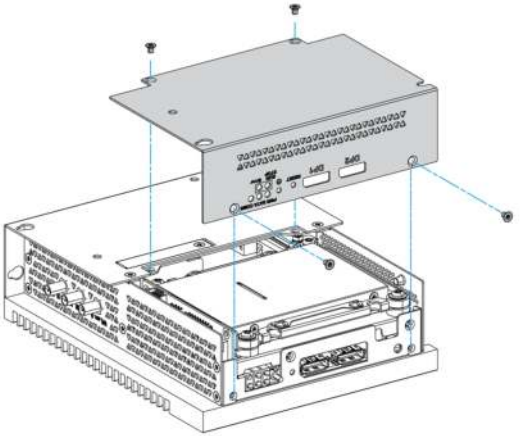
4	Connect the SATA cables to the Box iPC: 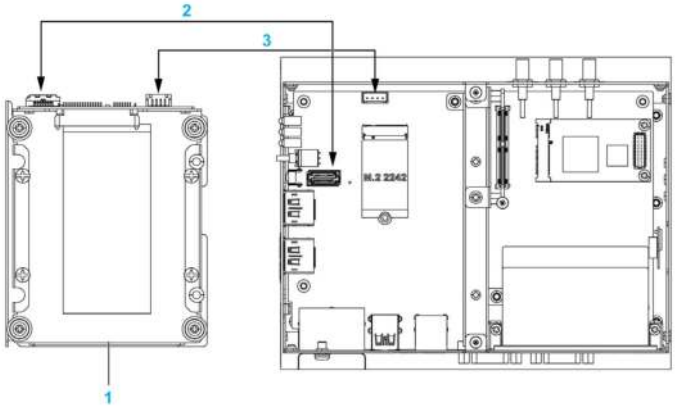 **1** HDD/SSD adapter **2** SATA power cable **3** SATA signal cable **NOTE:** The SATA signal cable is soft to avoid cable push up issue after it is connected.

Step	Action
5	Screw the HDD/SSD adapter (HMIYBADHDDBMO1) on the Box iPC (the screws are in the accessory): 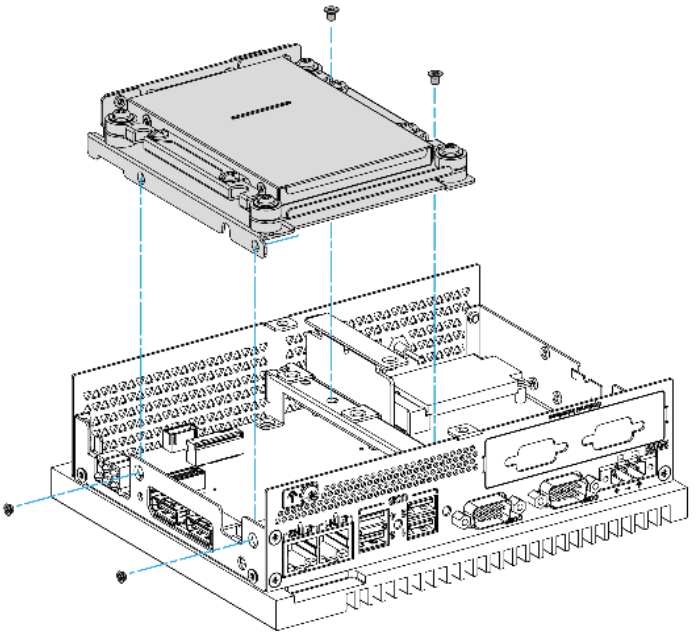 **NOTE:** The shock absorbers protect against hard drive vibrations.
6	Fix the HDD/SSD with the HDD/SSD case and screw it to fix: 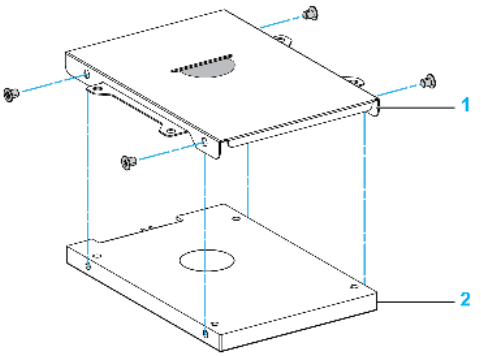

Step	Action
7	Slide the HDD/SSD case into the HDD/SSD adapter and screw it to fix: 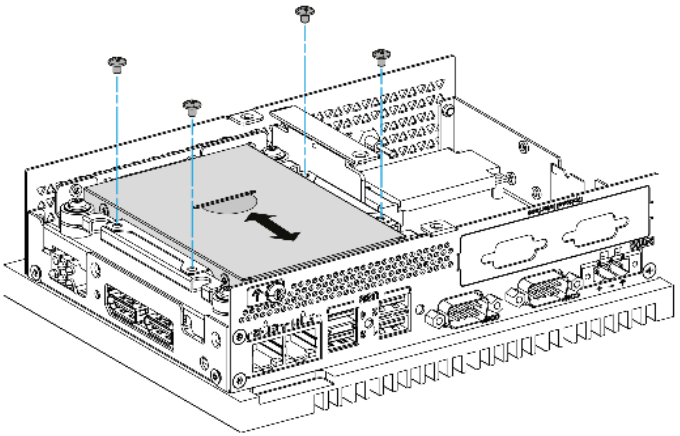
8	Replace the cover. Secure the cover using the four screws. **NOTE:** The recommended torque to tighten these screws is 0.5 Nm (4.5 lb-in).

Box iPC Universal and Performance (HMIBMU/HMIBMP) CFast Card Installation

Introduction

The Box iPC operating system views the CFast card as a hard disk. Proper handling and care of the CFast card helps extend the life of the card. Familiarize yourself with the card before attempting to insert or remove the card.

Before installing or removing a CFast card, shut down Windows operating system in an orderly fashion and remove all power from the device.

DANGER

HAZARD OF ELECTRIC SHOCK, EXPLOSION OR ARC FLASH

- Remove all power from the device before removing any covers or elements of the system, and prior to installing or removing any accessories, hardware, or cables.
- Unplug the power cable from both the Harmony Industrial PC and the power supply.
- Always use a properly rated voltage sensing device to confirm that power is off.
- Replace and secure all covers or elements of the system before applying power to the unit.
- Use only the specified voltage when operating the Harmony Industrial PC. The AC unit is designed to use 100...240 Vac input. The DC unit is designed to use 24 Vdc input. Always check whether your device is AC or DC powered before applying power.

Failure to follow these instructions will result in death or serious injury.

CAUTION

MEMORY CARD DAMAGE AND DATA LOSS

- Remove all power before making any contact with an installed memory card.
- Use only memory cards sold by Schneider Electric as accessory for this product. The performance of the Harmony Industrial PC has not been tested using memory cards from other manufacturers.
- Confirm that the memory card is correctly oriented before insertion.
- Do not bend, drop, or strike the memory card.
- Do not touch the memory card connectors.
- Do not disassemble or modify the memory card.
- Keep the memory card dry.

Failure to follow these instructions can result in injury or equipment damage.

NOTICE
ELECTROSTATIC DISCHARGE Take the necessary protective measures against electrostatic discharge before attempting to remove the Box iPC cover. **Failure to follow these instructions can result in equipment damage.**

Inserting the CFast Card

The procedure describes how to insert the CFast card.

Step	Action
1	Remove the two screws of the cover of the CFast card: 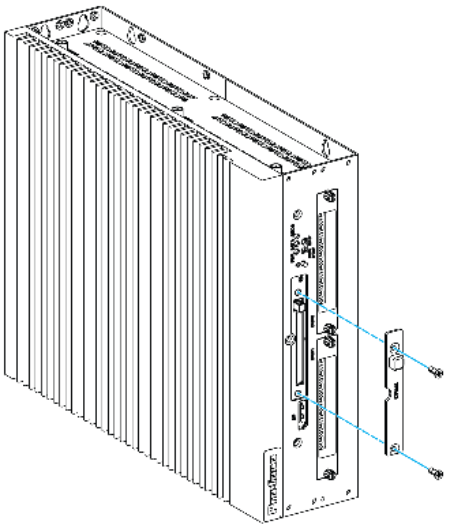

Step	Action
2	Insert the CFast card into the card slot. Press the CFast card slot firmly into the Box iPC. Replace the front cover. Secure the front cover using the two screws: 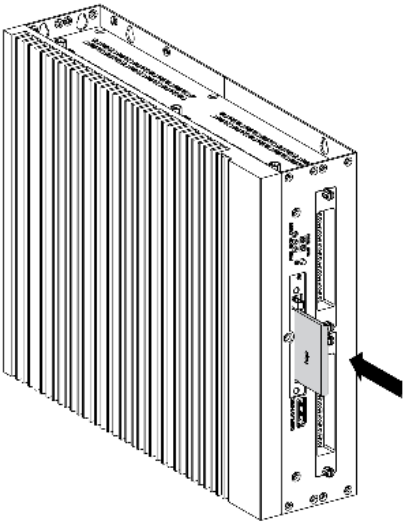

CFast Card Installation

Refer to the relevant procedure in the software installation guide for the Harmony Box iPC and terminals. The installation guide is shipped with the product.

Box iPC Universal and Performance (HMIBMU/HMIBMP) mSATA Card Installation

Introduction

The Box iPC operating system views the mSATA card as a hard disk. Proper handling and care of the mSATA card helps extend the life of the card. Familiarize yourself with the card before attempting insertion or removal of the card.

The Box iPC supports three types of SATA devices and four SATA ports.The table shows the STATA device configuration:

SATA port	SATA device	SATA speed
Port 1	mSATA	6 Gb/s; 3 Gb/s; 1.5 Gb/s
Port 2	CFast	
Port 3	HDD/SSD 1	
Port 4	HDD/SSD 2	

Before installing or removing a card, shut down Windows operating system in an orderly fashion and remove all power from the device.

DANGER

HAZARD OF ELECTRIC SHOCK, EXPLOSION OR ARC FLASH

- Remove all power from the device before removing any covers or elements of the system, and prior to installing or removing any accessories, hardware, or cables.
- Unplug the power cable from both the Harmony Industrial PC and the power supply.
- Always use a properly rated voltage sensing device to confirm that power is off.
- Replace and secure all covers or elements of the system before applying power to the unit.
- Use only the specified voltage when operating the Harmony Industrial PC. The AC unit is designed to use 100...240 Vac input. The DC unit is designed to use 24 Vdc input. Always check whether your device is AC or DC powered before applying power.

Failure to follow these instructions will result in death or serious injury.

⚠ CAUTION

MEMORY CARD DAMAGE AND DATA LOSS

- Remove all power before making any contact with an installed memory card.
- Use only memory cards sold by Schneider Electric as accessory for this product. The performance of the Harmony Industrial PC has not been tested using memory cards from other manufacturers.
- Confirm that the memory card is correctly oriented before insertion.
- Do not bend, drop, or strike the memory card.
- Do not touch the memory card connectors.
- Do not disassemble or modify the memory card.
- Keep the memory card dry.

Failure to follow these instructions can result in injury or equipment damage.

NOTICE

ELECTROSTATIC DISCHARGE

Take the necessary protective measures against electrostatic discharge before attempting to remove the Harmony Industrial PC cover.

Failure to follow these instructions can result in equipment damage.

mSATA Card Installation

The procedure describes how to insert the mSATA card.

Step	Action
1	Disconnect the power cord to the Box iPC.
2	Touch the housing or ground connection (not the power supply) to discharge any electrostatic charge from your body.
3	Unscrew the nine screws from the cover and remove it: 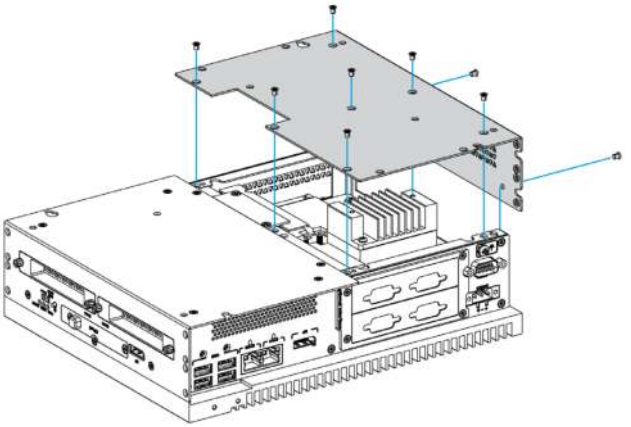
4	Insert the mSATA card firmly into the card slot and fasten it with two screws: 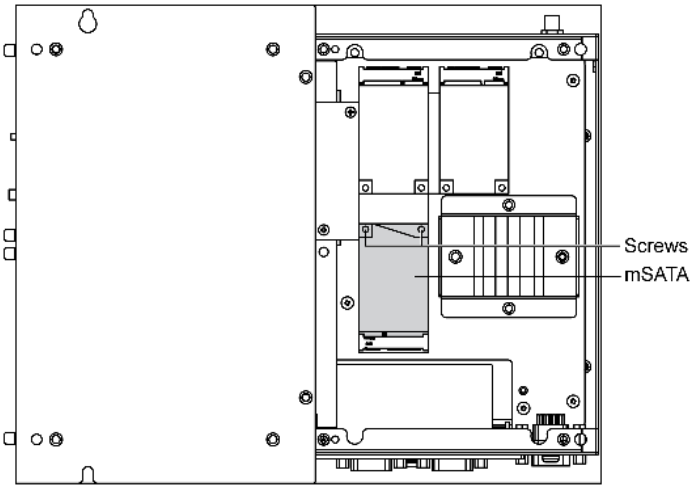

Step	Action
5	Replace the cover and fasten it with nine screws: 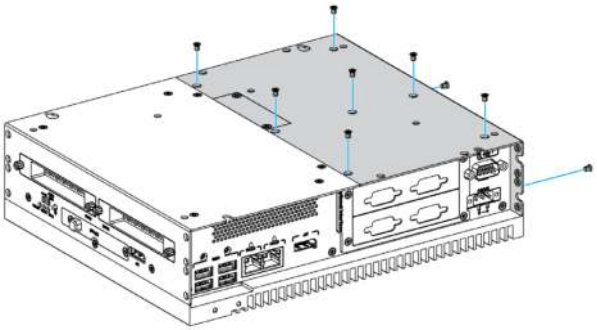 **NOTE:** The recommended torque to tighten these screws is 0.5 Nm (4.5 lb-in).

mSATA Card Data Backup

Refer to the relevant procedure in the software installation guide for the Harmony Box iPC and terminals. The installation guide is shipped with the product.

Box iPC Universal and Performance (HMIBMU/HMIBMP) mini PCIe and PCI/PCIe Card Installation

Introduction

The Box iPC supports two PCI/PCIe slots and two mini PCIe slots.

NOTE: When installing PCI/PCIe cards on board, the operating temperature is limited to 45 °C (113 °F). When installing a single PCI/PCIe card, the maximum power consumption is 10 W. When installing two PCI/PCIe cards, the maximum power consumption is 12 W as the sum of the two cards (however, the maximum power consumption per card is 10 W). Either when installing one card or two cards, if the total power consumption exceeds 6 W, the fan kit (HMIYBFKT4BM11) is required.

Before installing or removing a mini PCIe or PCI/PCIe cards shut down Windows operating system in an orderly fashion and remove all power from the device.

DANGER

HAZARD OF ELECTRIC SHOCK, EXPLOSION OR ARC FLASH

- Remove all power from the device before removing any covers or elements of the system, and prior to installing or removing any accessories, hardware, or cables.
- Unplug the power cable from both the Harmony Industrial PC and the power supply.
- Always use a properly rated voltage sensing device to confirm that power is off.
- Replace and secure all covers or elements of the system before applying power to the unit.
- Use only the specified voltage when operating the Harmony Industrial PC. The AC unit is designed to use 100...240 Vac input. The DC unit is designed to use 24 Vdc input. Always check whether your device is AC or DC powered before applying power.

Failure to follow these instructions will result in death or serious injury.

CAUTION

MEMORY CARD DAMAGE AND DATA LOSS

- Remove all power before making any contact with an installed memory card.
- Use only memory cards sold by Schneider Electric as accessory for this product. The performance of the Harmony Industrial PC has not been tested using memory cards from other manufacturers.
- Confirm that the memory card is correctly oriented before insertion.
- Do not bend, drop, or strike the memory card.
- Do not touch the memory card connectors.
- Do not disassemble or modify the memory card.
- Keep the memory card dry.

Failure to follow these instructions can result in injury or equipment damage.

NOTICE

ELECTROSTATIC DISCHARGE

Take the necessary protective measures against electrostatic discharge before attempting to remove the Harmony Industrial PC cover.

Failure to follow these instructions can result in equipment damage.

⚠ CAUTION

OVERTORQUE AND LOOSE HARDWARE

- Do not exert more than 0.5 Nm (4.5 lb-in) of torque when tightening the installation fastener, enclosure, accessory, or terminal block screws. Tightening the screws with excessive force can damage the installation fastener.
- When fastening or removing screws, ensure that they do not fall inside the Harmony Industrial PC chassis.

Failure to follow these instructions can result in injury or equipment damage.

mini PCIe Card Installation

The table describes how to install a mini PCIe card:

Step	Action
1	Disconnect the power cord to the Box iPC.
2	Touch the housing or ground connection (not the power supply) to discharge any electrostatic charge from your body.
3	Unscrew the nine screws from the cover: 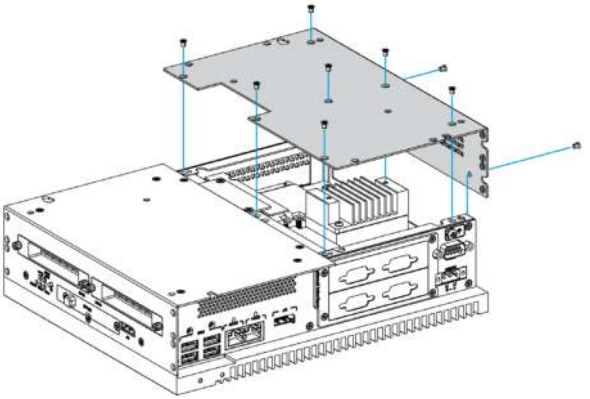
4	Insert the mini PCIe card into the expansion card connector and fasten it with two screws: 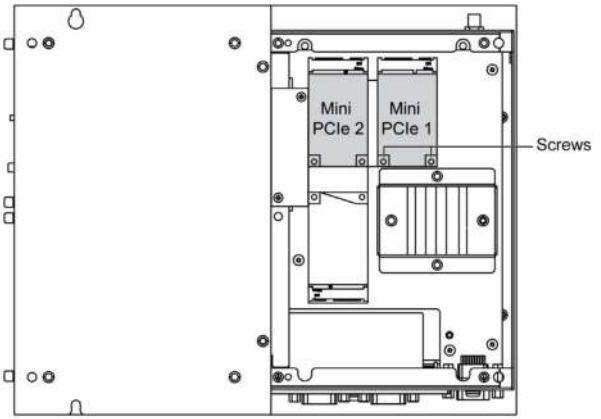 When using a mini PCIe card with an external cable attached, install a clamp or other device to secure the cable. **NOTE:** The recommended torque to tighten these screws is 0.5 Nm (4.5 lb-in).

Step	Action
5	Replace the cover and fasten it with nine screws: 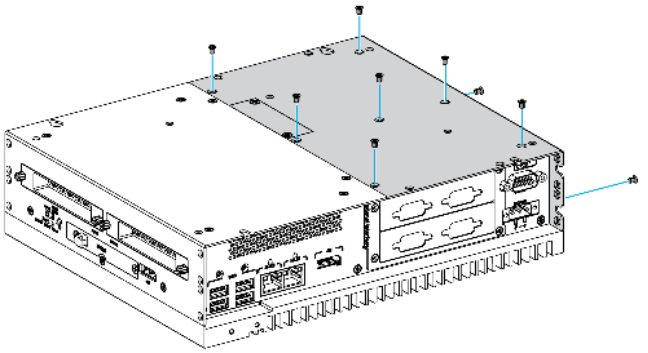

PCI/PCIe Card Installation

The table describes how to install a PCI/PCIe card:

Step	Action
1	Disconnect the power cord to the Box iPC.
2	Touch the housing or ground connection (not the power supply) to discharge any electrostatic charge from your body.
3	Unscrew the nine screws from the cover and remove it: 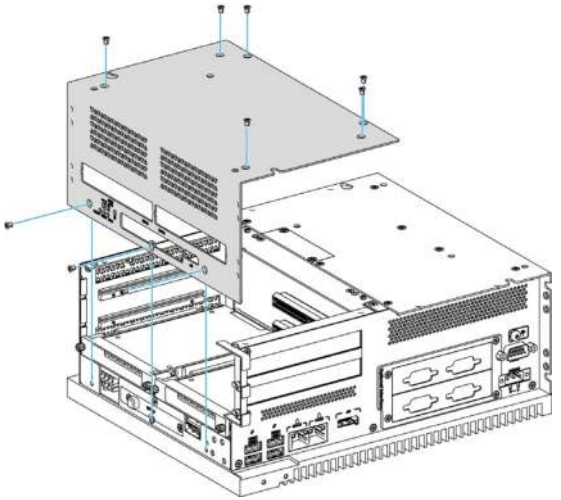

Step	Action
4	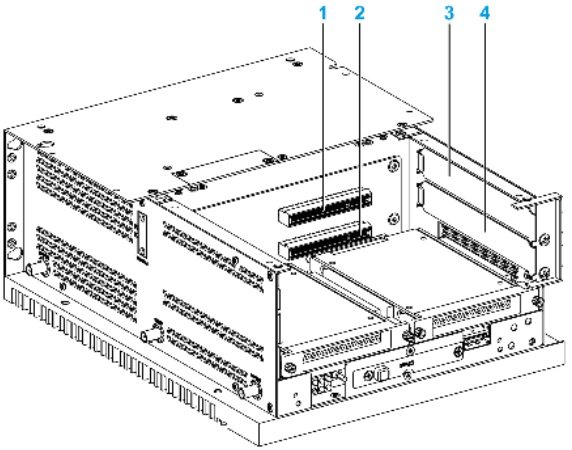 **1** PCI/PCIe card slot 1 **2** PCI/PCIe card slot 2 **3** PCI/PCIe plate slot 1 **4** PCI/PCIe plate slot 2 **NOTE:** The recommended torque to tighten these screws is 0.5 Nm (4.5 lb-in).
5	Replace the cover and fasten it with nine screws: 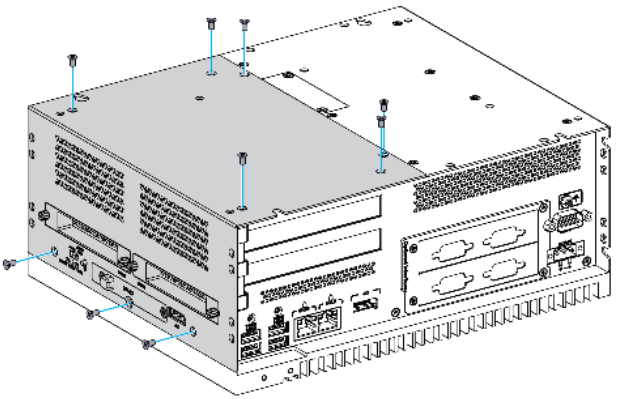

Box iPC Universal and Performance (HMIBMU/HMIBMP) HDD/SSD Drive Installation

Overview

The Box iPC supports three types of SATA devices and four SATA ports.The table shows the SATA device configuration:

SATA port	SATA device	SATA speed
Port 1	mSATA	6 Gb/s; 3 Gb/s; 1.5 Gb/s
Port 2	CFast	
Port 3	HDD/SSD 1	
Port 4	HDD/SSD 2	

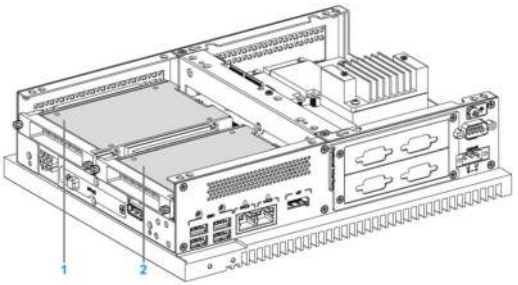

1 HDD/SSD 1
2 HDD/SSD 2

The Box iPC supports RAID 0/1 (redundant array of independent disks) feature (two HDD or two SSD can support this feature). The RAID is a data storage virtualization technology that combines multiple physical disk drive components into a single logical unit for the purposes of data redundancy, performance improvement, or both.

Use Intel rapid storage technology (Intel RST) to support RAID 0/1 feature (see the Intel rapid storage user manual on the recovery media). Do not use Windows RAID configuration tool:

- RAID level 0 performance scaling up to six drives, enabling higher throughput for data intensive applications such as video editing.
- Data redundancy is offered through RAID level 1, which performs mirroring.

The Box iPC supports HDD or SSD SATA hot-swap feature:

SATA RAID	Description	Hot-Swap
RAID 0	Spanned volume	No
RAID 1	Mirroring	Yes

NOTE: There is a limitation with the System Monitor when RAID mode is enabled. The **Hard Information** is not updated.

HDD/SSD Drive Installation

NOTICE

ELECTROSTATIC DISCHARGE

Take the necessary protective measures against electrostatic discharge before attempting to remove the Harmony Industrial PC cover.

Failure to follow these instructions can result in equipment damage.

⚠ CAUTION

OVERTORQUE AND LOOSE HARDWARE

- Do not exert more than 0.5 Nm (4.5 lb-in) of torque when tightening the installation fastener, enclosure, accessory, or terminal block screws. Tightening the screws with excessive force can damage the installation fastener.
- When fastening or removing screws, ensure that they do not fall inside the Harmony Industrial PC chassis.

Failure to follow these instructions can result in injury or equipment damage.

NOTE: Remove all power before attempting this procedure.

This table describes how to install an HDD/SSD drive:

Step	Action
1	Disconnect the power cord to the Box iPC.
2	Touch the housing or ground connection (not the power supply) to discharge any electrostatic charge from your body.
3	Remove the two screws of the front cover and remove it: 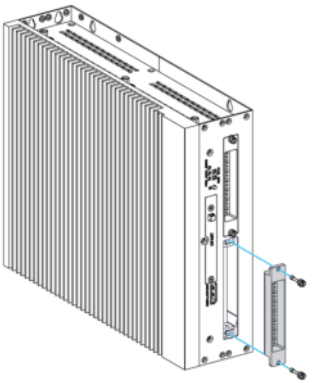

Step	Action
4	Install the 2.5" SATA HDD/SSD on the HDD/SSD bracket of the slide-in (HMIYMADSDD1). Screw in the four screws on the side of HDD/SSD bracket (the screws are in the accessory box). Insert the HDD/SSD drive inside the slot: 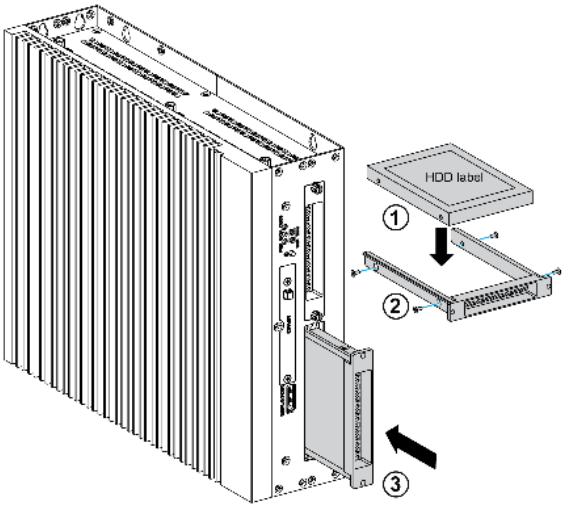
5	Replace the front cover. Secure the front cover using the two screws. **NOTE:** The recommended torque to tighten these screws is 0.5 Nm (4.5 lb-in).

Section 8.3
Box iPC Universal and Performance Fan Kit Installation

Fan Kit Installation

Introduction

When installing PCI/PCIe cards on board, the operating temperature is limited to 45 °C (113 °F). When installing a single PCI/PCIe card, the maximum power consumption is 10 W. When installing two PCI/PCIe cards, the maximum power consumption is 12 W as the sum of the two cards (however, the maximum power consumption per card is 10 W). Either when installing one card or two cards, if the total power consumption exceeds 6 W, the fan kit (HMIYBFKT4BM11) is required.

The fan kit (HMIYBFKT4BM11) is mounted on the Box iPC 4-Slot only.

Before installing a fan kit, shut down Windows in an orderly fashion and remove all power from the device.

DANGER

HAZARD OF ELECTRIC SHOCK, EXPLOSION OR ARC FLASH

- Remove all power from the device before removing any covers or elements of the system, and prior to installing or removing any accessories, hardware, or cables.
- Unplug the power cable from both the Harmony Industrial PC and the power supply.
- Always use a properly rated voltage sensing device to confirm that power is off.
- Replace and secure all covers or elements of the system before applying power to the unit.
- Use only the specified voltage when operating the Harmony Industrial PC. The AC unit is designed to use 100...240 Vac input. The DC unit is designed to use 24 Vdc input. Always check whether your device is AC or DC powered before applying power.

Failure to follow these instructions will result in death or serious injury.

NOTICE

ELECTROSTATIC DISCHARGE

Take the necessary protective measures against electrostatic discharge before attempting to remove the Harmony Industrial PC cover.

Failure to follow these instructions can result in equipment damage.

Fan Kit Installation

The procedure describes how to install a fan kit:

Step	Action
1	Disconnect the power supply to the Box iPC.
2	Touch the housing or ground connection (not the power supply) to discharge any electrostatic charge from your body.
3	Remove the fan connector cover. Align the fan kit parallel to the Box iPC and press it in until it latches. Make sure that the fan kit is inserted so that the connections match-up and fasten it with four screws supplied with the fan kit: 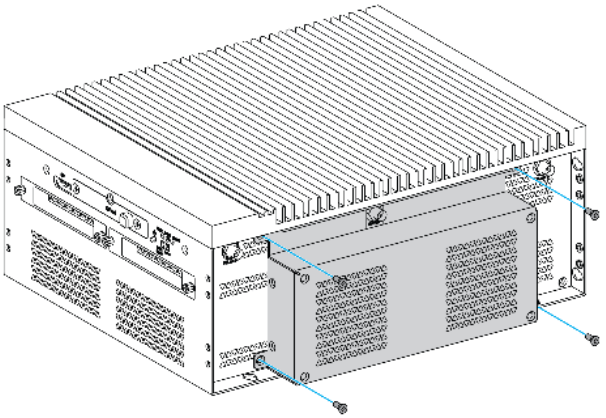
4	Remove the four screws to remove the back plate and to access the filter. The filter must be regularly check: 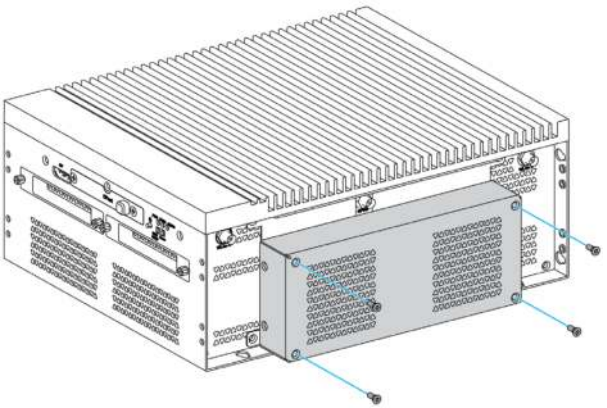

Section 8.4
Optional Cards and Optional Interfaces

Overview

This section describes the optional cards, optional interfaces, and their installation.

What Is in This Section?

This section contains the following topics:

Topic	Page
Optional Interface Installation	210
16DI/8DO Interface Description	221
8 x Analog Input Interface Description	228
RS-232, RS-422/485 Interface Description	235
Ethernet IEEE Interface Description	248
CANopen Interface Description	251
Profibus DP Interface Description	255
Wireless LAN Interface Card Description	259
Audio Interface (for Box iPC Universal/Performance) Description	264
Audio Interface Description	266
USB Interface Description	271
NVRAM Card Description	274
mini PCIe to Display Adapter Interface Description	276
VGA and DVI Interface Description	282
GPRS Description	300
4G Cellular Description	305
Cyber Security TPM Module Description	324

Optional Interface Installation

Introduction

Before installing or removing an interface, shut down Windows operating system in an orderly fashion and remove the power from the device.

DANGER

HAZARD OF ELECTRIC SHOCK, EXPLOSION OR ARC FLASH

- Remove all power from the device before removing any covers or elements of the system, and prior to installing or removing any accessories, hardware, or cables.
- Unplug the power cable from both the Harmony Industrial PC and the power supply.
- Always use a properly rated voltage sensing device to confirm that power is off.
- Replace and secure all covers or elements of the system before applying power to the unit.
- Use only the specified voltage when operating the Harmony Industrial PC. The AC unit is designed to use 100...240 Vac input. The DC unit is designed to use 24 Vdc input. Always check whether your device is AC or DC powered before applying power.

Failure to follow these instructions will result in death or serious injury.

NOTE:

- The operating temperature is 0...55 °C (131 °F) except with 2 x optional interfaces + display limited to 45 °C (113 °F).
- The operating temperature for horizontal mounting for Box iPC Optimized (HMIBMO is limited to 45 °C (113 °F).
- The operating temperature for Box iPC Optimized (HMIBMI) is limited to 45 °C (113 °F).

Optional Interface Compatible Table

Part number	Description	HMIBMP/HMIBMU	HMIBMI/HMIBMO Expandable
HMIYMINUSB1	Interface USB 3.0, 2 x USB	Yes(1)	Yes
HMIYMINAUD1	Interface audio, 1 x LI/LO/MIC	Yes(2)	N/A
HMIYMINSL24851	Interface 2 x RS-422/485 isolation	Yes	Yes
HMIYMINSL44851	Interface 4 x RS-422/485	Yes	Yes
HMIYMINSL22321	Interface 2 x RS-232 isolation	Yes	Yes
HMIYMINSL42321	Interface 4 x RS-232	Yes	Yes
HMIYMINAUD21	Interface audio 1 x LI/LO/MIC	Yes(2)	Yes
HMIYMINATPM201	Interface TPM 2.0	Yes(9)	Yes
HMIYMINIO1	Interface 16 DI/8 DO, 1 x DB37, 2 m cable	Yes	Yes
HMIYMIN8AI1	Interface 8 analog input	Yes	Yes
HMIYMINWIFI1	Interface WiFi, AC3160, 2 x antenna	Yes	Yes
HMIYMINWIFI2	Interface WiFi access point, 2 x antennas	Yes	Yes
HMIYMINGPRS1	Interface 3G, 1 x antenna	Yes	Yes
HMIYMIN1ETH1	Interface IEEE1588, 1 x RJ45	Yes	Yes
HMIYMIN4GUS1	Interface 4G US, 1 x antenna	Yes	Yes
HMIYMIN4GEU1	Interface 4G EU/ASIA, 1 x antenna	Yes	Yes
HMIYADDPDVI11	Interface DP to DVI adaptor, active mode	Yes	Yes

(1) Only support one HMIYMINUSB1 in HMIBMP/HMIBMU.
(2) Only support one HMIYMINAUD1 in HMIBMP/HMIBMU. HMIBMP/HMIBMU has pin header, so for Line in, Line out and Mic in, preferably use HMIYMINAUD1.
(3) HMIBMO Expandable only support one Interface bracket; either with 2 x VGA or DVI-D bracket.
(4) HMIYMINDVII1 and HMIYMINVGADVID1 cannot use together in HMIBMP/HMIBMU.
(5) HMIYMINDP1 cannot use with HMIYMINDVII1 or HMIYMINVGADVID1.
(6) HMIYMINDP1 and HMIYMINUSB1 cannot use together in HMIBMP/HMIBMU.
(7) Remove the existing driver when you want to install HMIYMINDP1 or HMIYMINDVII1 or HMIYMINVGADVID1.
(8) Cannot monitor UPS status because Display Adapter does not have COM port.
(9) Need to downgrade to TPM 1.2 in HMIBMP/HMIBMU.

Part number	Description	HMIBMP/HMIBMU	HMIBMI/HMIBMO Expandable
HMIYMINDVII1	Interface 1 x DVI-I	Yes(4/5)	Yes
HMIYMINVGADVID1	Interface, 1 x DVI-D, 2 x VGA, two brackets	Yes(4/5)	Yes(3)
HMIYMINDP1	Interface transmitter	Yes(5/6/7)	Yes(7)
HMIYMINPRO1	Interface Profibus w/NVRAM	Yes	Yes
HMIYMINCAN1	Interface fieldbus, 2 x CANopen	Yes	Yes

(1) Only support one HMIYMINUSB1 in HMIBMP/HMIBMU.
(2) Only support one HMIYMINAUD1 in HMIBMP/HMIBMU. HMIBMP/HMIBMU has pin header, so for Line in, Line out and Mic in, preferably use HMIYMINAUD1.
(3) HMIBMO Expandable only support one Interface bracket; either with 2 x VGA or DVI-D bracket.
(4) HMIYMINDVII1 and HMIYMINVGADVID1 cannot use together in HMIBMP/HMIBMU.
(5) HMIYMINDP1 cannot use with HMIYMINDVII1 or HMIYMINVGADVID1.
(6) HMIYMINDP1 and HMIYMINUSB1 cannot use together in HMIBMP/HMIBMU.
(7) Remove the existing driver when you want to install HMIYMINDP1 or HMIYMINDVII1 or HMIYMINVGADVID1.
(8) Cannot monitor UPS status because Display Adapter does not have COM port.
(9) Need to downgrade to TPM 1.2 in HMIBMP/HMIBMU.

The figure shows the interface types (top view):

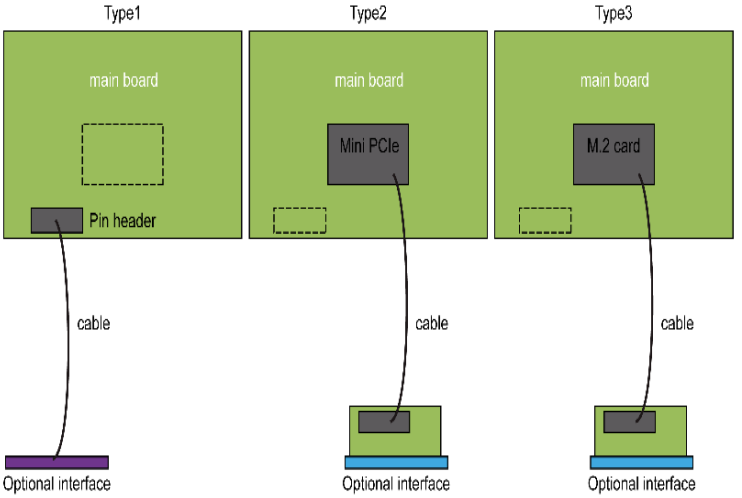

Type1 Pin header
Type 2 mini PCIe card
Type 3 M.2 card

The figure shows the possible interfaces:

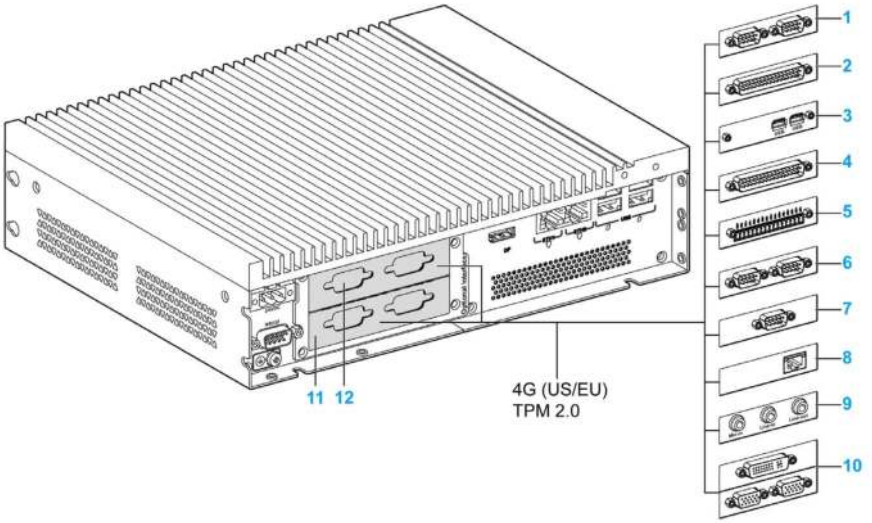

1 2 x RS-232, RS-422/485 interface
2 4 x RS-232, RS-422/485 interface
3 USB interface
4 DIO interface
5 Analog input interface
6 CANopen interface
7 Profibus DP interface
8 mini PCIe to Display Adapter Interface
9 Audio interface
10 VGA and DVI interface for the Box iPC Universal/Performance
11 Optional interface 1
12 Optional interface 2 for the Box iPC Universal/Performance

The table shows the type and part number of the optional interface:

Designation	Part number	Interface	Type:		
			mini PCIe card	Interface plate	Pin header from system
NVRAM card *(see page 274)*	HMIYMINNVRAM1	Card NVRAM	1	–	–
RS-232, RS-422/485 interface *(see page 235)*	HMIYMINSL24851	2 x RS-422/485 isolated	1	1	–
	HMIYMINSL44851	4 x RS-422/485			
	HMIYMINSL22321	2 x RS-232 isolated			
	HMIYMINSL42321	4 x RS-232			
DIO interface *(see page 221)*	HMIYMINIO1	16 x DI / 8 x DO	1	1	–
Analog input interface *(see page 228)*	HMIYMIN8AI1	8 x analog input	1	1	–
Ethernet interface *(see page 248)*	HMIYMIN1ETH1	1 x Ethernet gigabit IEEE1588	1	1	–
Wireless LAN interface *(see page 259)*	HMIYMINWIFI1	1 x Wireless LAN and 2 x antennas	1	1	–
CANopen interface *(see page 251)*	HMIYMINCAN1	2 x CanOpen/CanBus	1	1	–
Profibus DP interface *(see page 255)*	HMIYMINPRO1	1 x Profibus DP master NVRAM	1	1	–
USB interface	HMIYMINUSB1	2 x USB 3.0	1	1	–
Audio interface *(see page 264)* for Box iPC Universal/Performance	HMIYMINAUD1	1 x Audio	–	1	1
Audio mini PCIe interface *(see page 266)* for Box iPC Optimized	HMIYMINAUD21	1 x Audio	1	1	–
mini PCIe to display adapter interface *(see page 276)*	HMIYMINDP1	1 x Transmitter	1	1	–
DVI-I interface *(see page 276)*	HMIYMINDVII1	1 x DVI-I	1	1	–
VGA and DVI-D interface *(see page 282)* for Box iPC Universal/Performance	HMIYMINVGADVID1	2 x VGA and 1 DVI-D	1	2	–
GPRS interface *(see page 300)*	HMIYMINGPRS1	1 x GPRS/GSM	1	–	–
4G cellular for EU/ASIA *(see page 305)*	HMIYMIN4GUS1	4G cellular for EU/Asia, antenna	1	–	–

Designation	Part number	Interface	Type:		
			mini PCIe card	Interface plate	Pin header from system
4G cellular for US *(see page 305)*	HMIYMIN4GEU1	4G cellular for US, antenna	1	–	–
TPM module *(see page 324)*	HMIYMINATPM201	–	–	–	1

Interface Installation

Before installing or removing a mini PCIe card, shut down Windows operating system in an orderly fashion and remove the power from the device.

The Box iPC HMIBMP, HMIPCCP2B, HMIBMU, HMIPCCU2B, HMIPCCU27, HMIPCCU2J, HMIPCCP27, HMIPCCP2J, and the Display Adapter HMIDADP11 are classified hazardous locations Class I Division 2 (see chapter "Certifications and Standards"). Observe the following:

⚠ WARNING

EXPLOSION HAZARD

- Always confirm the ANSI/ISA 12.12.01 and CSA C22.2 N°213 hazardous location rating of your device before installing or using it in a hazardous location.
- To power on or power off a Harmony Industrial PC installed in a Class I, Division 2 hazardous location, you must either:
  - Use a switch located outside the hazardous environment, or
  - Use a switch certified for Class I, Division 1 operation inside the hazardous area.
- Substitution of any components may impair suitability for Class I, Division 2.
- Do not connect or disconnect equipment unless power has been switched off or the area is known to be non-hazardous. This applies to all connections including power, ground, serial, parallel, network, and rear USB connections.
- Never use unshielded / ungrounded cables in hazardous locations.
- When enclosed, keep enclosure doors and openings closed at all times to avoid the accumulation of foreign matter inside the workstation.
- Do not open lid nor use the USB connectors in hazardous locations.
- Do not expose to direct sunlight or UV light source.

Failure to follow these instructions can result in death, serious injury, or equipment damage.

The Box iPC HMIBMI, HMIPCCP•2L, HMIPCCP•2N and the displays HMIDM9521, HMIDMA521 are not classified hazardous locations.

⚠ DANGER

POTENTIAL FOR EXPLOSION IN HAZARDOUS LOCATION

Do not use these products in hazardous locations.

Failure to follow these instructions will result in death or serious injury.

NOTICE

ELECTROSTATIC DISCHARGE

Take the necessary protective measures against electrostatic discharge before attempting to remove the Harmony Industrial PC cover.

Failure to follow these instructions can result in equipment damage.

⚠ CAUTION

OVERTORQUE AND LOOSE HARDWARE

- Do not exert more than 0.5 Nm (4.5 lb-in) of torque when tightening the installation fastener, enclosure, accessory, or terminal block screws. Tightening the screws with excessive force can damage the installation fastener.
- When fastening or removing screws, ensure that they do not fall inside the Harmony Industrial PC chassis.

Failure to follow these instructions can result in injury or equipment damage.

NOTE: Remove the power before attempting this procedure.

The table describes how to install an interface of the Box iPC Universal/Performance (HMIBMU/HMIBMP):

Step	Action
1	Disconnect the power cord from the Box iPC.
2	Touch the housing or ground connection (not the power supply) to discharge any electrostatic charge from your body.
3	Unscrew the nine screws from the cover and remove it: 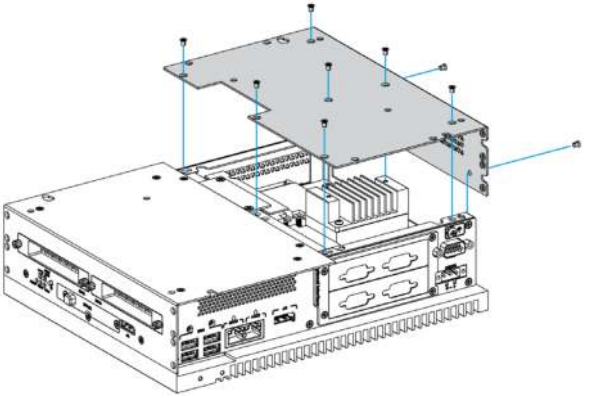
4	Insert the interface in the slot of the Box iPC Universal/Performance and fasten it to the Box iPC with four screws: 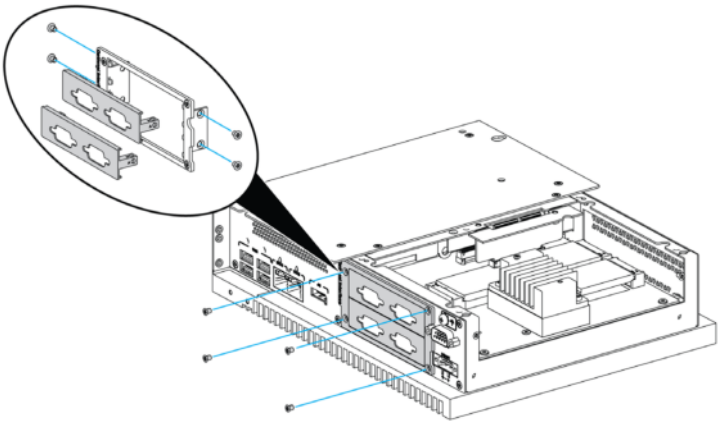 **NOTE:** The recommended torque to tighten these screws is 0.5 Nm (4.5 lb-in).

Step	Action
5	Insert the mini PCIe card into the expansion card connector of the Box iPC Universal and fasten it with two screws: 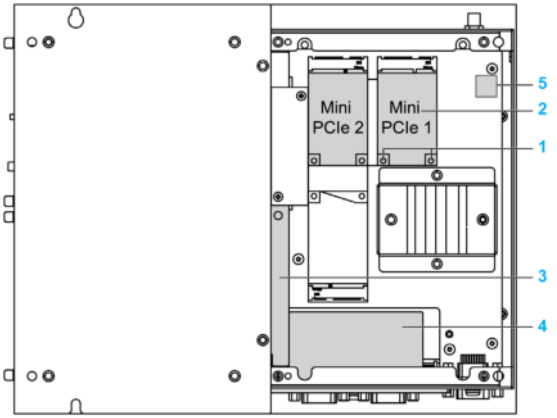 **1** Screws **2** mini PCIe card **3** Pin header **4** Optional interface **5** TPM module The pin headers are for both USB interface and Audio interface. NOTE: ● When using a mini PCIe card with an external cable attached, install a clamp or other device to secure the cable. ● The requirement of Phillips screw driver is type size 2. The recommended torque to tighten these screws is 0.5 Nm (4.5 lb-in).
6	Replace the cover and fasten it with nine screws: 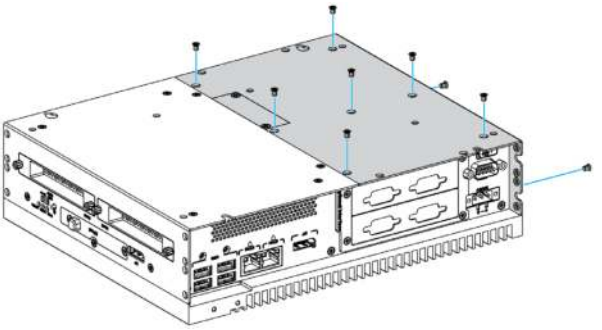 NOTE: The recommended torque to tighten these screws is 0.5 Nm (4.5 lb-in).

The table describes how to install an interface of the Box iPC Optimized (HMIBMI/HMIBMO Expandable):

Step	Action
1	Disconnect the power cord from the Box iPC.
2	Touch the housing or ground connection (not the power supply) to discharge any electrostatic charge from your body.
3	Unscrew the eight screws from the covers and remove them: 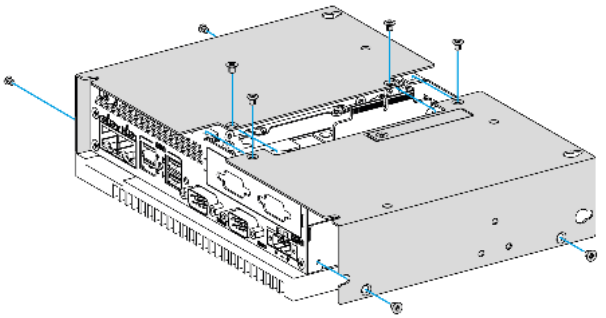
4	Insert the interface in the slot of the Box iPC Optimized and fasten it to the Box iPC with two screws: 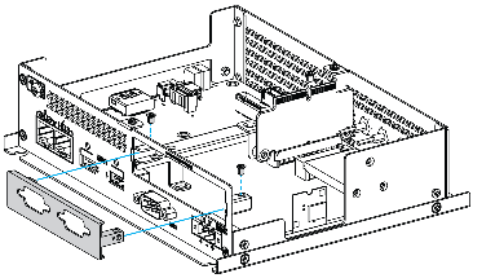 **NOTE:** The recommended torque to tighten these screws is 0.5 Nm (4.5 lb-in).

Step	Action
5	Insert the mini PCIe card into the expansion card connector of the Box iPC Optimized and fasten it with two screws: 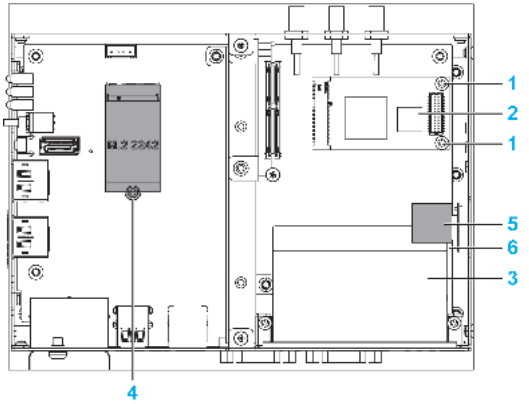 **1** Screws size M2 (included in accessory Box iPC) **2** mini PCIe card **3** Optional interface **4** M.2 card for HMIBMO **5** TPM module **6** Pin header The pin headers are for both USB interface and Audio interface. **NOTE:** ● When using a mini PCIe card with an external cable attached, install a clamp or other device to secure the cable. ● The requirement of Phillips screw driver is type size 2. The recommended torque to tighten these screws is 0.5 Nm (4.5 lb-in).
6	Replace the covers and fasten them with eight screws: 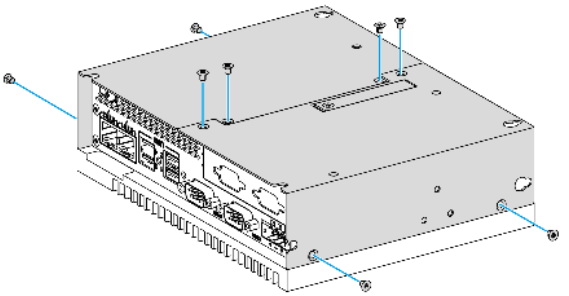 **NOTE:** The recommended torque to tighten these screws is 0.5 Nm (4.5 lb-in).

16DI/8DO Interface Description

Introduction

The HMIYMINIO1 is categorized as a digital input/output module. It can be associated with a DIN rail terminal card, and is compatible with the mini PCIe card.

During card installation, there is no need to set jumpers or DIP switches. Instead, all bus-related configurations such as base I/O address and interrupt are automatically done by the Plug-and-Play function.

The HMIYMINIO1 has a built-in DIP switch that helps define each ID of the card when multiple 16DI/8DO interface has been installed.

The HMIYMINIO1 offers two counter inputs which can perform event counting, frequency measurement and pulse width measurement. The counters on the interface have a counter value match interrupt function. When this interrupt function is enabled, an interrupt signal is generated if the counter value reaches a pre-set counter match value. The counter continues to count until an overflow occurs; then it goes back to its reset value zero and continue the counting process. You can set each individual counter channel to count either falling edge (high-to-low) or rising edge (low-to-high) signals.

The figure shows the 16DI/8DO interface:

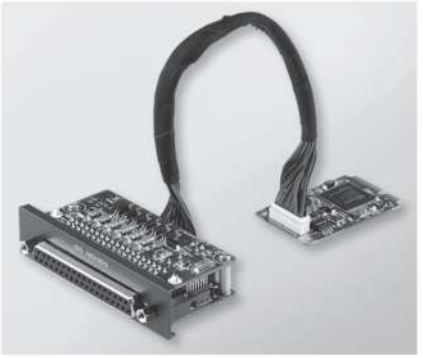

The figure shows the 16DI/16DO DIN rail terminal card and cable:

The figure shows the dimensions of the 16DI/8DO interface:

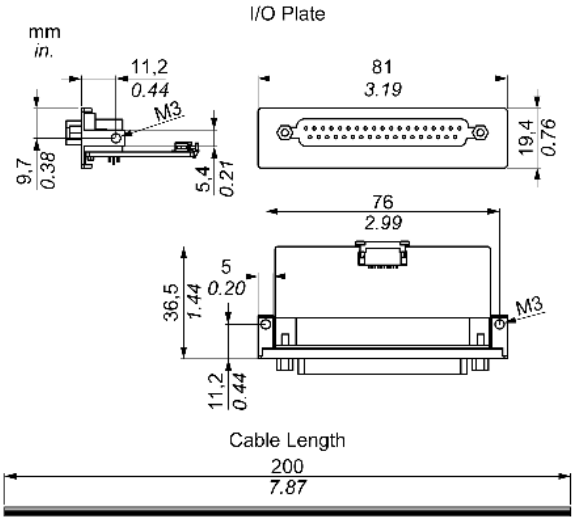

16DI/8DO Interface

The table shows technical data for the 16DI/8DO interface:

Element	Characteristics
General	
Bus type	mini PCIe card revision 1.2
Connectors	1 x socket D-Sub 37-pin
Power consumption	Typical: 400 mA at 3.3 Vdc, maximum: 520 mA at 3.3 Vdc
Isolated digital input	
Input channels	16
Input voltage (wet contact)	Logic 0: 0...3 Vdc, logic 1: 10...30 Vdc
Input voltage (dry contact)	Logic 0: open, logic 1: shorted to GND
Input current	10 Vdc at 2.97 mA, 20 Vdc at 6.35 mA, 30 Vdc at 9.73 mA
Input resistance	5 KΩ
Interrupt capable channels	2, IDI0 and IDI8
Isolation protection	2,500 Vdc
Over voltage protection	70 Vdc
ESD protection	4 kV (contact) 8 kV (air)
Opto-isolator response	50 µs

Element	Characteristics
Isolated digital output	
Output channels	8
Output type	MOSFET
Output voltage	5...30 Vdc
Sink current	Maximum 100 mA/channel
Isolation protection	2,500 Vdc
Opto-isolator response	50 µs
Counter	
Channels	2
Resolution	32 bit
Maximum input frequency	1 kHz

16DI/8DO Connections

The table shows the D-Sub 37-pin assignments:

Assignment	Description	D-Sub 37-pin socket connector
IDI0...15	Isolated digital input	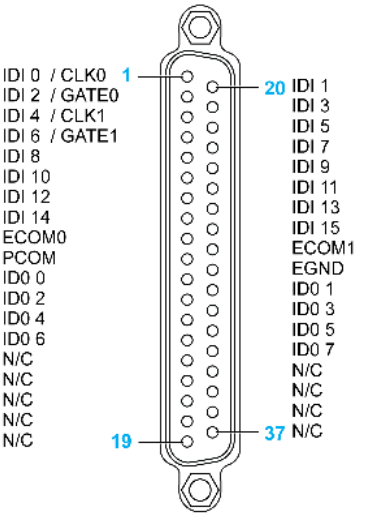
ID0...7	Isolated digital output	
ECOM0	External common of IDI0...7	
ECOM1	External common of IDI8...15	
PCOM	Free wheeling common diode for IDO	
EGND	External ground	
GATE0...1	Counter gate input	
CLK0...1	Counter n clock input	
N/C	Not connected	

16DI/16DO DIN Rail Terminal Card Connections

The table shows the terminal block pin assignments:

Pin	Description
1	IDI 0 / CLK 0
2	IDI 2 / GATE 0
3	IDI 4 / CLK 1
4	IDI 6 / GATE 1
5	IDI 8
6	IDI 10
7	IDI 12
8	IDI 14
9	ECOM0
10	PCOM
11	IDO 0
12	IDO 2
13	IDO 4
14	IDO 6
15	N/C
16	N/C
17	N/C
18	N/C
19	N/C
20	IDI 1
21	IDI 3
22	IDI 5
23	IDI 7
24	IDI 9
25	IDI 11
26	IDI 13
27	IDI 15
28	ECOM1
29	EGND
30	IDO 1
31	IDO 3
32	IDO 5

Pin	Description
33	IDO 7
34	N/C
35	N/C
36	N/C
37	N/C
38	FG

The recommended torque to tighten these screws is 0.4 Nm (3.54 lb-in).

Connected conductor cross section are:

- Single or stranded wire: 0.5 to 2.5 mm^2 (AWG 24 to 12)
- Bar Terminal: 0.25 to 1.5 mm^2
- Striped line length: 7 to 8 mm

Switch and Jumper Settings

The jumper JP1 on the position 0 (default), load default while reset (default). The jumper JP1 on the position 1 (enabled), keeps the last status after reset.

The table shows the switch SW1 to set the ID of the 16DI/8DO interfaces:

ID3	ID2	ID1	ID0	ID	Switch SW1
1	1	1	1	0	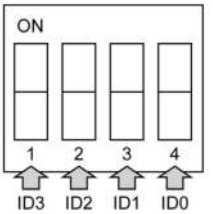
1	1	1	0	1	
1	1	0	1	2	
1	1	0	0	3	
1	0	1	1	4	
1	0	1	0	5	
1	0	0	1	6	
1	0	0	0	7	
0	1	1	1	8	
0	1	1	0	9	
0	1	0	1	10	
0	1	0	0	11	
0	0	1	1	12	
0	0	1	0	13	
0	0	0	1	14	
0	0	0	0	15	

Compatibility Table

Part number	Description	HMIBMP/HMIBMU	HMIBMI/HMIBMO Expandable
HMIYMINIO1	Interface 16 DI/8DO, 1 x DB 37, 2 m cable	Yes	Yes

Cable Routing

Box iPC Optimized:

HMIBMP/HMIBMU:

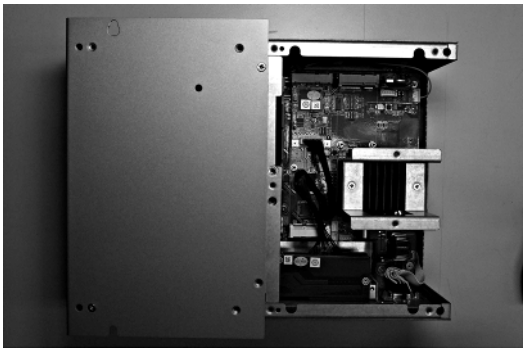

Device Manager and Hardware Installation

Install the optional interface into the Box iPC first, then install the driver. The driver installation media for the 16DI/8DO interface is included in the recovery media (USB key). After the interface is installed, you can verify whether it is properly installed on your system through the **Device Manager**

NOTE: If you see your device name listed on it but marked with an exclamation sign **!**, it means that your interface has not been correctly installed. In this case, remove the device from the **Device Manager** by selecting its device name and press the **Remove** button. Then go through the driver installation process again.

After the 16DI/8DO interface is properly installed into the Box iPC, you can now configure your device using the navigator.

8 x Analog Input Interface Description

Introduction

The HMIYMIN8AI1 is categorized as an analog input module. It is compatible with the mini PCIe card.

The figure shows the 8 x analog input interface:

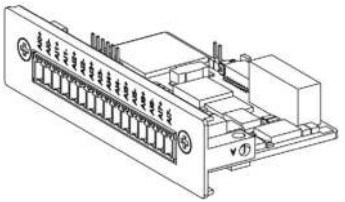

The figure shows the dimensions:

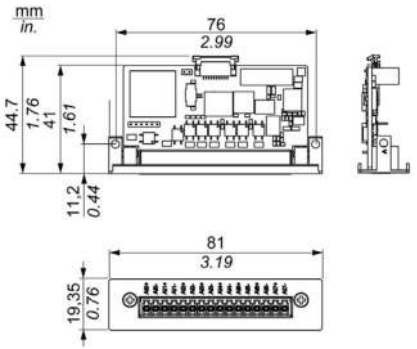

Characteristics

The table shows technical data:

Element	Characteristics
Input channel	8 (differential)
Input range	0...10 V
Accuracy	± 0.1% or better (voltage) at 25 °C
Resolution	16 bits
Calibration	Auto calibration
Sampling rate	10 samples/second for total channels (when eight channels are activated, average 1 sample/second per channel)
Span drift	±25 ppm

8 x Analog Input Connections

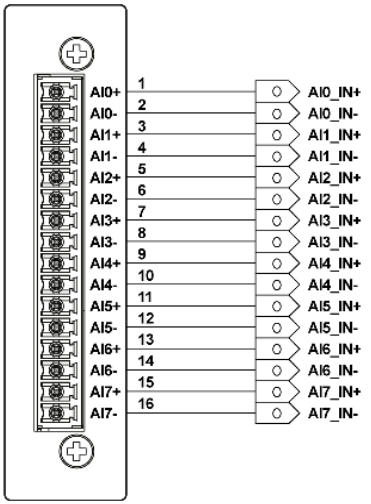

Compatibility Table

Part number	Description	HMIBMP/HMIBMU	HMIBMI/HMIBMO Expandable
HMIYMIN8AI1	Interface 8 x analog input	Yes	Yes

Cable Routing

Device Manager and Hardware Installation

Install the optional interface into the Box iPC first, then install the driver. The driver installation media for the 8 x analog input interface is included in the recovery media (USB memory key). After the interface is installed, you can verify whether it is properly installed on your system through the **Device Manager**

NOTE: If you see your device name listed on it but marked with an exclamation sign **!**, it means that your interface has not been correctly installed. In this case, remove the device from the **Device Manager** by selecting its device name and press the **Remove** button. Then go through the driver installation process again.

After the 8 x analog input interface is properly installed into the Box iPC, you can now configure your device using the navigator.

Analog Input Module Utility for System Monitor

NOTE:
The following are the two methods to get analog input module information:

- If you are using the IIoT Node-Red OS SKU, please get analog input module information in analog input node *(see page 432)*.
- For the OS with System Monitor SKU, install the analog input module utility from USB key, in optional interface devices list.

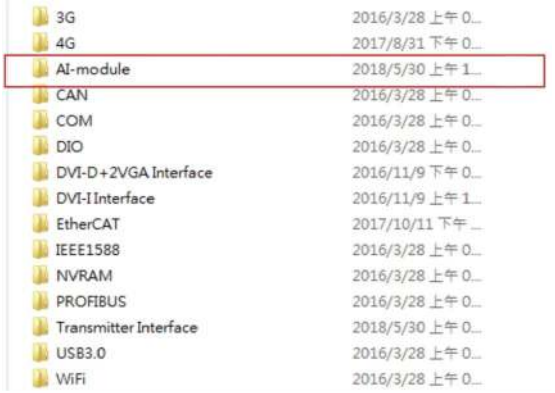

The following steps explain how to set up your environment before you use analog input utility:

Step	Action
1	Install the driver (\CDM v2.12.00 WHQL Certified.exe).
2	Install the drivers (\VC_redist.x86.exe and \vcredist.x86.exe).
3	Copy EAPI_AI\ai_value_range_infor.json to C:\Windows.
4	Copy EAPI_AI\win32\libEApi-AI.dll to C:\Windows\SysWOW64.
5	Copy EAPI_AI\x64\libEApi-AI.dll to C:\Windows\System32.

NOTE: You can get all the files you need from the **Recovery USB key:\Optional Interfaces drivers\AI-module**.

Analog Input Module Utility

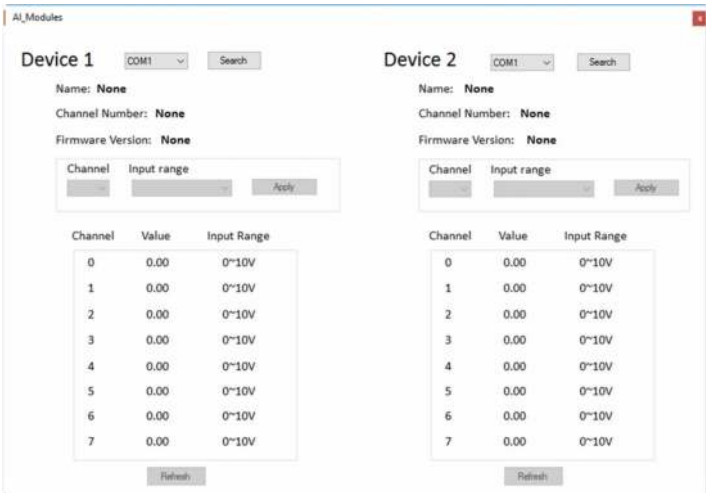

Steps	Description
COM port selection	Shows the COM ports on the device
Search button	Gets all information from the COM port selected
Name	Device name. For example, 8 x Analog Input Interface, 2 x Analog Input Interface
Channel number	2 channel, 8 channel
Firmware Version	The version of firmware
Channel	Channel selection: ● A: 2 channel: 0-1 ● B: 8 channel: 0-7
Input range selection	0-10 V, 4-20 mA: ● A: 2 channel: 0-10 V, 4-20 mA ● B: 8 channel: 0-10 V
Apply button	Sets the value (Channel, Input Range) to analog input module
Refresh button	Gets all values from the device

Search, Apply, Refresh Utilities

Step	Action
1	Select a COM port from the list. 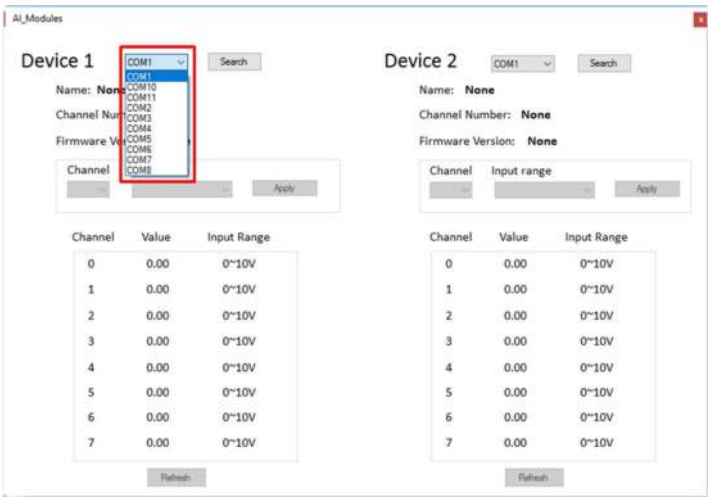
2	Click **Search** to get all information of the selected COM port. 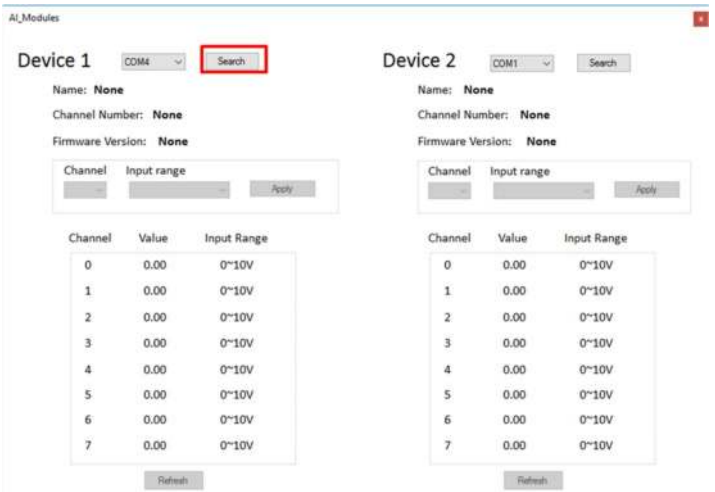
3	Select a channel number and input range form the lists.

Step	Action
4	Click **Apply** to set the value. 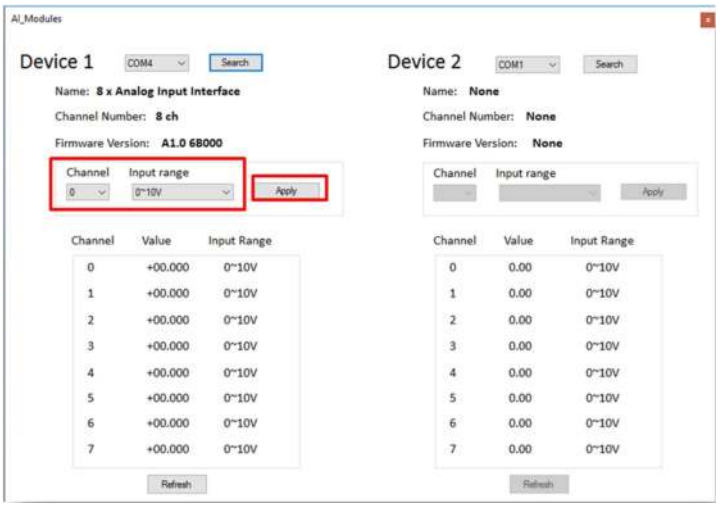
5	Click **Refresh** to get all information again. 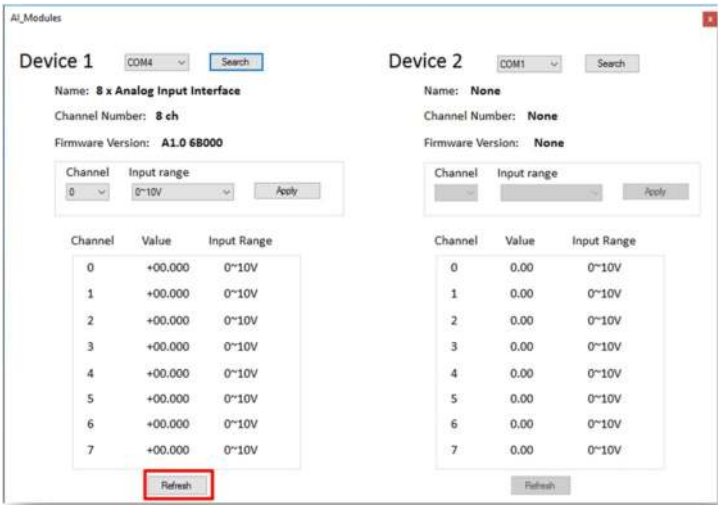

RS-232, RS-422/485 Interface Description

Introduction

The HMIYMINSL series are categorized as communication modules. They are all compatible with the mini PCIe card including isolated / non-isolated RS-232, RS-422/485 communication cards for automation control.

The figure shows the RS-232, RS-422/485 interfaces:

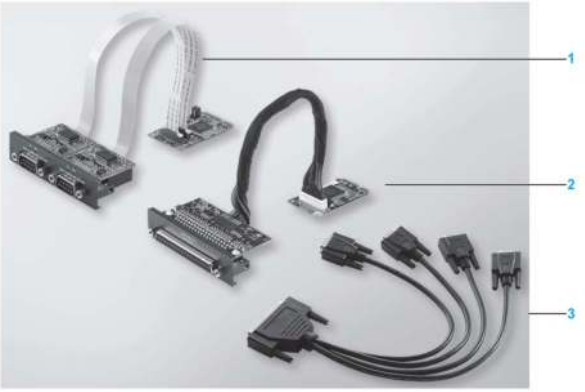

1 2 x RS-232, RS-422/485 interface
2 4 x RS-232, RS-422/485 interface
3 1 x interface cables

The following figure shows the dimensions of the 2 x RS-232, RS-422/485 interface:

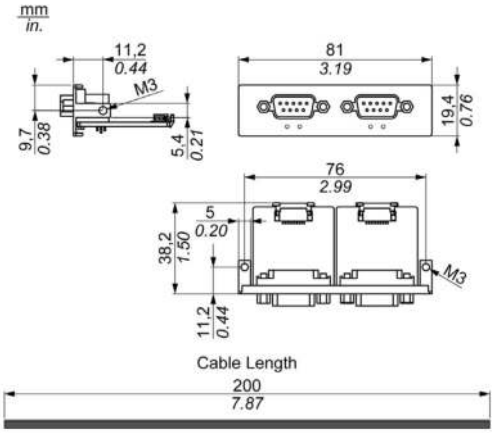

The following figure shows the dimensions of the 4 x RS-232, RS-422/485 interface:

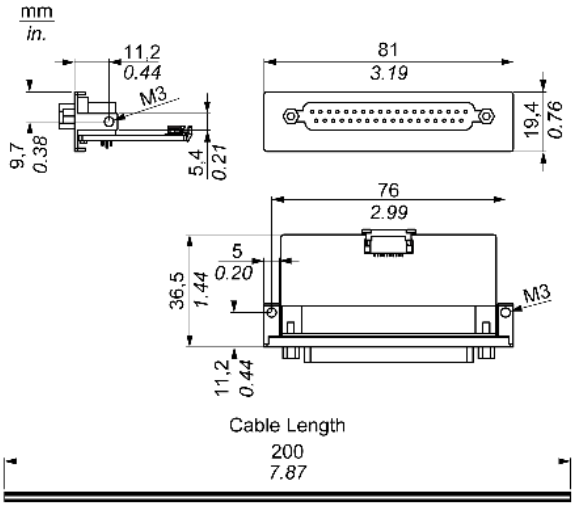

Serial Interface

The table shows technical data for the serial interfaces:

Element	Characteristics			
Part number	**HMIYMINSL24851**	**HMIYMINSL22321**	**HMIYMINSL44851**	**HMIYMINSL42321**
General				
Bus type	Mini PCIe card revision 1.2			
Type	2 x RS-422/485, electrically isolated	2 x RS-232, electrically isolated	4 x RS-422/485, electrically non-isolated	4 x RS-232, electrically non-isolated
Connectors	2 x D-Sub 9-pin, plug		1 x D-Sub 37-pin, socket	
Power consumption	3.3 Vdc at 400 mA		3.3 Vdc at 500 mA	
Communication				
Data bits	5, 6, 7, 8			
FIFO	128 bytes			
Flow control	RTS/CTS Xon/Xoff		RTS/CTS (not supported) Xon/Xoff	RTS/CTS Xon/Xoff
Parity	None, odd, even, Mark and space			
Stop bits	1, 1.5, 2			

Element	Characteristics			
Part number	HMIYMINSL24851	HMIYMINSL22321	HMIYMINSL44851	HMIYMINSL42321
Transfer rate				
Transfer rate RS-232	Maximum 115 kbps with cable length ≤ 10 m Maximum 64 kbps with cable length ≤ 15 m			
Transfer rate RS-422/485	Maximum 115 kbps with cable length ≤ 1200 m			

Cable Serial Interface

The table shows the technical data of the cable serial interface:

Element	Characteristics	
Signal lines	Cable cross section RS-232 Cable cross section RS-422 Cable cross section RS-485 Wire insulation Conductor resistance Stranding Shield	4 x 0.16 mm² (26 AWG), tinned Cu. wire 4 x 0.25 mm² (24 AWG), tinned Cu. wire 4 x 0.25 mm² (24 AWG), tinned Cu. wire Protective earth ground ≤ 82 Ω/km Wires stranded in pairs Paired shield with aluminum foil
Grounding line	Cable cross section Wire insulation Conductor resistance	1 x 0.34 mm² (22 AWG/19), tinned Cu. wire Protective earth ground ≤ 59 Ω/km
Outer sheathing	Material Features Cable shielding	PUR mixture Halogen free From tinned Cu. wires

Serial Interface Connections

This interface is used to connect the Box iPC to remote equipment, via a cable. The connector is a D-Sub 9-pin plug connector.

By using a long PLC cable to connect to the Box iPC, it is possible that the cable can be at an electrical potential that is different from the electrical potential of the panel, even if both are connected to ground.

The serial port that is not isolated has the signal ground (SG) and the functional ground terminals connected inside the panel.

DANGER

ELECTRIC SHOCK

- Make a direct connection between the ground connection screw and ground.
- Do not connect other devices to ground through the ground connection screw of this device.
- Install all cables according to local codes and requirements. If local codes do not require grounding, follow a reliable guide such as the US National Electrical Code, Article 800.

Failure to follow these instructions will result in death or serious injury.

The table shows the D-Sub 9-pin assignments:

Pin	Assignment		
	RS-232	RS-422/485	
1	DCD	TxD-/Data-	D-Sub 9-pin plug connector: 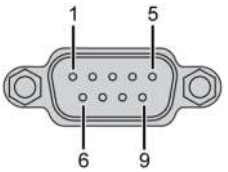
2	RxD	TxD+/Data+	
3	TxD	RxD+	
4	DTR	RxD-	
5	GND	GND/VEE	
6	DSR	RTS-	
7	RTS	RTS+	
8	CTS	CTS+	
9	RI	CTS-	

The table shows the D-Sub 37-pin assignments:

Pin	Assignment		
	RS-232	RS-422/485	
1	N.C.	N.C.	D-Sub 37-pin socket connector:
2	DCD3	TxD3-/Data3-	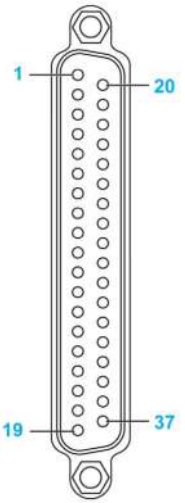
3	GND	GND/VEE3	
4	CTS3	N.C.	
5	RxD3	TxD3/Data3	
6	RI4	N.C.	
7	DTR4	RxD4-	
8	DSR4	N.C.	
9	RTS4	N.C.	
10	TxD4	RxD4	
11	DCD2	TxD2-/Data2-	
12	GND	GND	
13	CTS2	N.C.	
14	RxD2	TxD2/Data2	
15	RI1	N.C.	
16	DTR1	RxD1-	
17	DSR1	N.C.	
18	RTS1	N.C.	
19	TxD1	RxD1	
20	RI3	N.C.	
21	DTR3	RxD3-	
22	DSR3	N.C.	
23	RTS3	N.C.	
24	TxD3	RXD3	
25	DCD4	TxD4-/Data4-	
26	GND	GND/VEE4	
27	CTS4	N.C.	
28	RxD4	TxD4/Data4+	
29	RI2	N.C.	
30	DTR2	RxD2-	

Pin	Assignment		
	RS-232	RS-422/485	
31	DSR2	N.C.	
32	RTS2	N.C.	
33	TxD2	RxD2	
34	DCD1	TxD1-/Data1-	
35	GND	GND/VEE1	
36	CTS1	N.C.	
37	RxD1	TxD1/Data1+	

Any excessive weight or stress on communication cables may disconnect the equipment.

⚠ CAUTION

LOSS OF POWER

- Ensure that communication connections do not place excessive stress on the communication ports of the Harmony Industrial PC.
- Securely attach communication cables to the panel or cabinet.
- Use only D-Sub 9-pin cables with a locking system in good condition.

Failure to follow these instructions can result in injury or equipment damage.

RS-485 Interface Specificity

NOTE: All the pins of the RS-422 default interface should be used for operation.

The RTS line must be switched each time the driver is sent and received. There is no automatic switch back. This cannot be configured in Windows.

The voltage drop caused by long line lengths can lead to greater potential differences between bus stations, which can hinder communication. You can improve the communication by running a ground wire with the other wires.

NOTE: When using RS-422/485 communication with PLCs, you may need to reduce the transmission speed and increase the TX Wait time.

HMIYMINSL24851 DIP Switch Master/Slave Settings

The table shows the DIP switch Master/Slave settings:

Jumper	Pin	Description
CN2	1-2	RS-422 Master
	2-3	RS-485 / RS-422 Slave (Default)

Terminal Resistor settings:

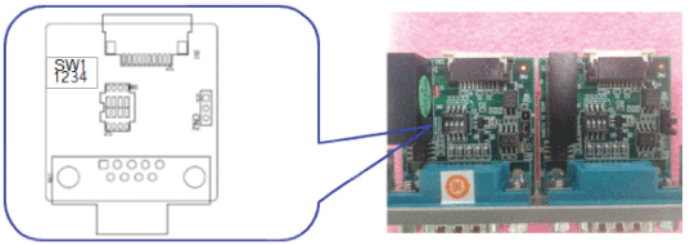

SW	Terminal Resistor	Switch Setting		Line
SW1	120 Ω	1	ON	TxD.Data +/-
		2	ON	RxD +/-
		3	OFF	(Open)
		4		(Open)
	300 Ω	1	OFF	(Open)
		2		(Open)
		3	ON	TxD.Data +/-
		4	ON	RxD +/-

HMIYMINSL44851 DIP Switch Master/Slave Settings

The table shows the DIP switch Master/Slave settings:

COM Port	Switch	Pin	Setting	Description
COM1	SW1	1	ON	RS-422 Master
			OFF	RS-485 / RS-422 Slave (Default)
COM2		2	ON	RS-422 Master
			OFF	RS-485 / RS-422 Slave (Default)
COM3		3	ON	RS-422 Master
			OFF	RS-485 / RS-422 Slave (Default)
COM4		4	ON	RS-422 Master
			OFF	RS-485 / RS-422 Slave (Default)

Terminal Resistor settings:

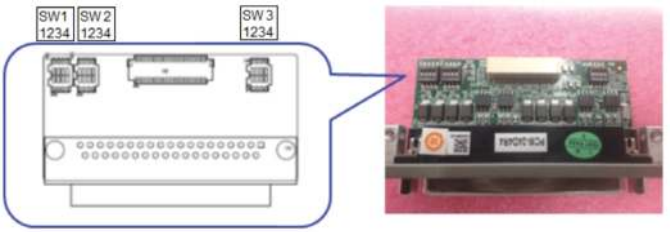

COM Port	Switch	Switch Setting		RS-422 Description	RS-485 Description
COM1	SW2	1	ON	120 Ω between Tx+/Tx-	120 Ω between Data+/Data-
			OFF	Open (Default)	
		2	ON	120 Ω between Rx+/Rx-	Invalid
			OFF	Open (Default)	
COM2		3	ON	120 Ω between Tx+/Tx-	120 Ω between Data+/Data-
			OFF	Open (Default)	
		4	ON	120 Ω between Rx+/Rx-	Invalid
			OFF	Open (Default)	

COM Port	Switch	Switch Setting		RS-422 Description	RS-485 Description
COM3	SW3	1	ON	120 Ω between Tx+/Tx-	120 Ω between Data+/Data-
			OFF	Open (Default)	
		2	ON	120 Ω between Rx+/Rx-	Invalid
			OFF	Open (Default)	
COM4		3	ON	120 Ω between Tx+/Tx-	120 Ω between Data+/Data-
			OFF	Open (Default)	
		4	ON	120 Ω between Rx+/Rx-	Invalid
			OFF	Open (Default)	

Compatibility Table

Part number	Description	HMIBMP/HMIBMU	HMIBMI/HMIBMO Expandable
HMIYMINSL24851	Inteface 2 x RS-422/485 isolation	Yes	Yes
HMIYMINSL44851	Inteface 4 x RS-422/485, DB37, cable	Yes	Yes
HMIYMINSL22321	Inteface 2 x RS-232 isolation	Yes	Yes
HMIYMINSL42321	Inteface 4 x RS-232, DB 37, cable	Yes	Yes

Cable Routing

Box iPC Optimized and HMIYMINSL44851:

Box iPC Optimized and HMIYMINSL42321:

Box iPC Optimized and HMIYMINSL24851:

Box iPC Optimized and HMIYMINSL22321:

Box iPC Universal/Box iPC Performance and HMIYMINSL44851:

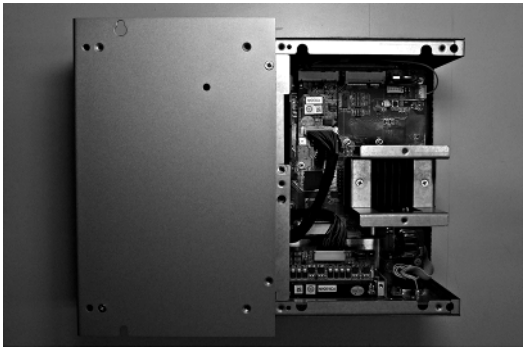

Box iPC Universal/Box iPC Performance and HMIYMINSL42321:

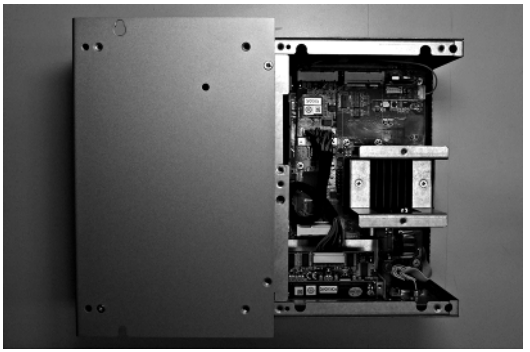

Box iPC Universal/Box iPC Performance and HMIYMINSL24851:

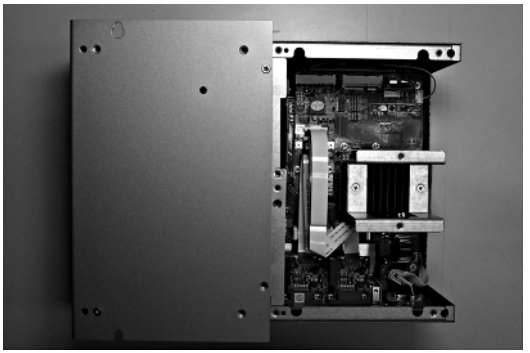

Box iPC Universal/Box iPC Performance and HMIYMINSL22321:

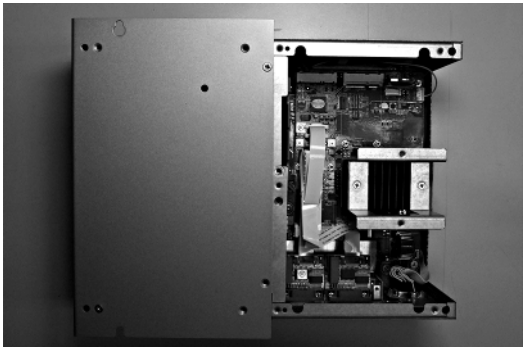

Device Manager and Hardware Installation

Install the optional interface into the Box iPC first, then install the driver. The driver installation media is included in the recovery media (USB key). After the interface is installed, you can verify whether it is properly installed on your system through the **Device Manager**.

Ethernet IEEE Interface Description

Introduction

The HMIYMIN1ETH1 is categorized as industrial communication with IEEE protocol module. It is compatible with the mini PCIe card.

The figure shows the Ethernet interface:

The figure shows the dimensions of the Ethernet IEEE interface:

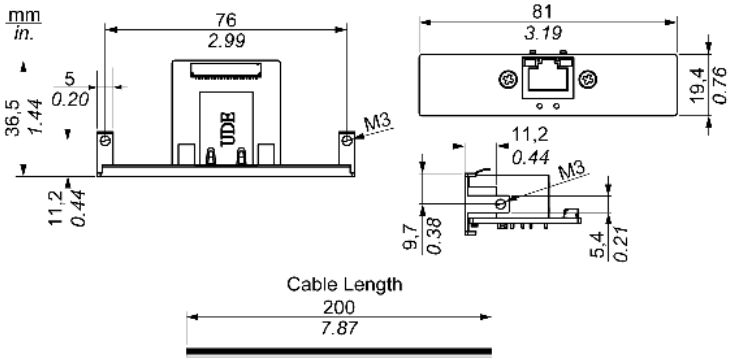

Ethernet Interface Description

The table shows technical data for the Ethernet interface:

Features	Values
General	
Bus type	Mini PCIe card revision 1.2
Connectors	1 x RJ45 GbE half-/full-duplex
Power consumption	Max. 9 W at 3.3 V
Communication	
Speed	10/100/1000 base-TX, auto-negotiation
Support	9 K jumbo frames, hardware-based support for precise time synchronization over Ethernet, wake-on-LAN

Any excessive weight or stress on communication cables may disconnect the equipment.

⚠ CAUTION

LOSS OF POWER

- Ensure that communication connections do not place excessive stress on the communication ports of the Box iPC.
- Securely attach communication cables to the panel or cabinet.

Failure to follow these instructions can result in injury or equipment damage.

Compatibility Table

Part number	Description	HMIBMU/HMIBMP	HMIBMI/HMIBMO Expandable
HMIYMIN1ETH1	Interface IEEE1588 TP,1 x RJ45	Yes	Yes

Cable Routing

Box iPC Optimized:

Box iPC Universal/Box iPC Performance:

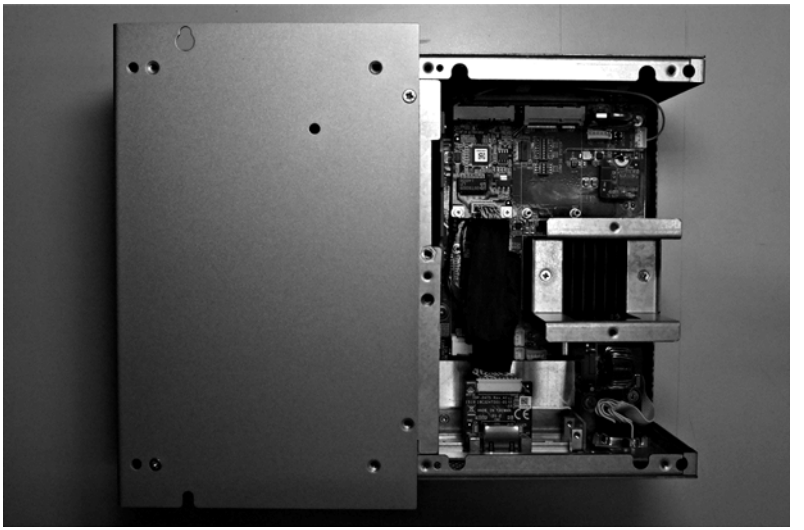

Device Manager and Hardware Installation

Install optional interface into the Box iPC first, then install the driver. The driver installation media is included in the recovery media (USB key). After the interface is installed, you can verify whether it is properly installed on your system through the **Device Manager**.

CANopen Interface Description

Introduction

The HMIYMINCAN1 is categorized as industrial communication with fieldbus protocol modules. It is compatible with the mini PCIe card.

The figure shows the CANopen interface:

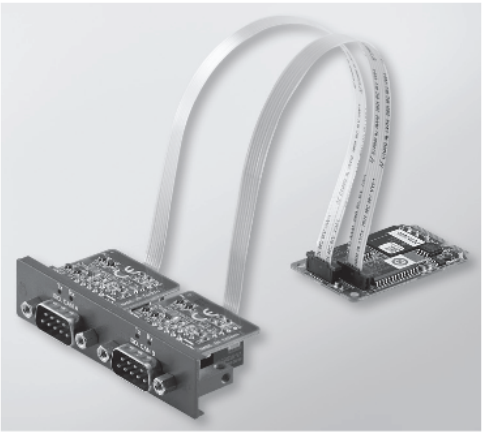

The figure shows the dimensions of the CANopen interface:

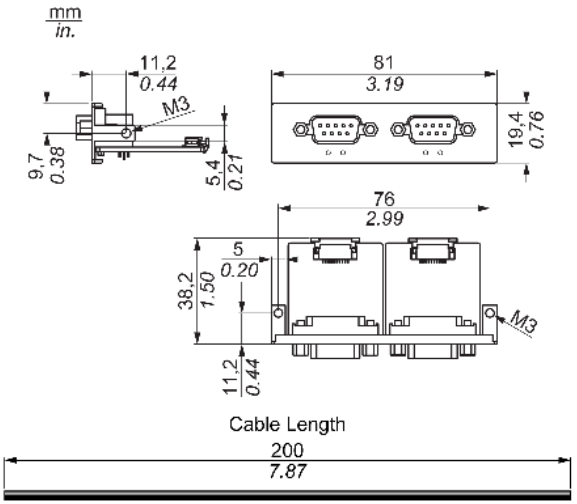

CANopen Interface Description

The table shows technical data for the CANopen interface:

Features	Values
General	
Bus type	Mini PCIe card revision 1.2
Connector	2 x plug D-Sub 9-pin
Power consumption	400 mA at 5 Vdc
Communication	
Protocol	CAN 2.0 A/B
Signal support	CAN_H, CAN_L
Speed	1 Mb/s
CAN frequency	16 MHz
Termination resistor	120 Ω (selected by jumper)

Connections

This interface is used to connect the Box iPC to remote equipment, via a cable. The connector is a D-Sub 9-pin plug connector.

By using a long PLC cable to connect to the Box iPC, it is possible that the cable can be at an electrical potential that is different from the electrical potential of the panel, even if both are connected to ground.

The table shows the D-Sub 9-pin assignments:

Pin	Assignment	D-Sub 9-pin plug male connector
1	–	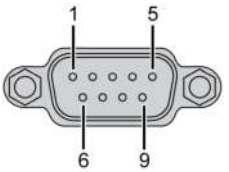
2	CAN_L	
3	GND	
4	–	
5	–	
6	–	
7	CAN_H	
8	–	
9	–	

NOTE: You can set the terminator resistor by jumper setting. The position (pin 1-2) is for the value of the terminator resistor of 120 ohm. The position (pin 2-3) is for without terminator resistor.

Any excessive weight or stress on communication cables may disconnect the equipment.

⚠ CAUTION

LOSS OF POWER

- Ensure that communication connections do not place excessive stress on the communication ports of the Harmony Industrial PC.
- Securely attach communication cables to the panel or cabinet.
- Use only D-Sub 9-pin cables with a locking system in good condition.

Failure to follow these instructions can result in injury or equipment damage.

Compatibility Table

Part number	Description	HMIBMU/HMIBMP	HMIBMI/HMIBMO Expandable
HMIYMINCAN1	Interface fieldbus, 2 x CANopen	Yes	Yes

Cable Routing

Box iPC Optimized:

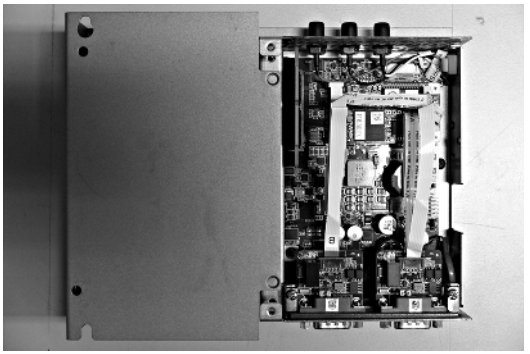

Box iPC Universal/Box iPC Performance:

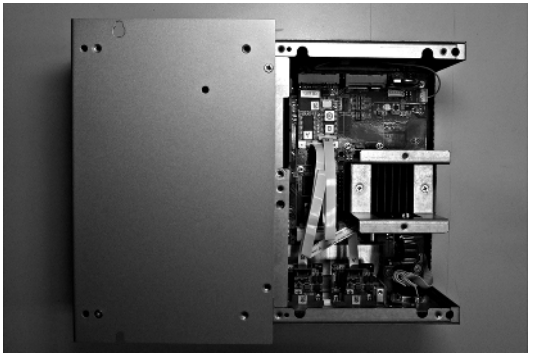

Device Manager and Hardware Installation

Install the optional interface into the Box iPC first, then install the driver. The driver installation media for the CANopen interface is included in the recovery media (USB key). After the interface is installed, you can verify whether it is properly installed on your system through the **Device Manager**

NOTE: If you see your device name listed on it but marked with an exclamation sign **!**, it means that your Interface has not been correctly installed. In this case, remove the device from the **Device Manager** by selecting its device name and press the **Remove** button. Then go through the driver installation process again.

After the CANopen interface is properly installed into the Box iPC, you can now configure your device using the navigator.

The CANopen protocol Library provides a C application programming interface (API) for accessing the CANopen network protocol stack of nodes. It is easy to use, configure, start, and monitor the CANopen devices careless CAN bus, developer focused on CANopen application functionality:

- Read and write object dictionary (local or by SDO)
- Control or monitor the node NMT state (NMT master)
- PDO transmission mode: on request, by SYNC, time driven, event driven
- Support 512 TPDOs and 512 RPDOs
- SYNC producer and consumer
- Heartbeat producer and consumer
- Emergency objects

Profibus DP Interface Description

Introduction

The HMIYMINPRO1 is categorized as industrial communication with fieldbus protocol modules (Profibus DP master or slave). It is compatible with the mini PCIe card.

NOTE: Download the firmware and configuration. Use the corresponding master or slave DTM in the configuration software SYCON.net (HILSCHER CIFX 90E-DP\ET\F\MR\ADVA/+ML).

The figure shows the Profibus DP interface:

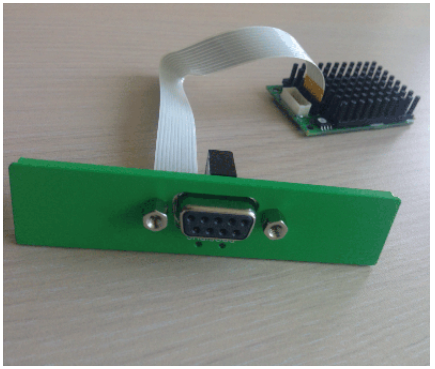

Profibus DP Interface Description

The table shows technical data for the Profibus DP interface:

Features	Values
General	
Bus type	mini PCIe card revision 1.2
Connector	1 x socket D-Sub 9-pin
Memory	8 Mb SDRAM / 4 Mb serial flash EPROM
Size of the dual-port memory	64 Kbyte
Power consumption	600 mA at 3.3 Vdc
Communication	
Protocol	Profibus DP V1
Signal support	RxD/TxD-P, RxD/TxD-N
Transmission rate	33 MHz
Dimensions	60 x 45 x 9.5 mm (2.36 x 1.77 x 0.37 in)

Profibus DP Specification

The table shows the Profibus DP specification:

Features	Profibus DP slave	Profibus DP master
Slave max.	–	125
Cyclic data max.	244 bytes	244 bytes/slave
Acyclic read/write	6,240 bytes	
Maximum number of modules	24	–
Configuration data	244 bytes	244 bytes/slave
Parameter data	237 bytes	

NOTE: To configure the master, a GSD file (device description file) is required. The settings in the used master must comply with the settings in the slave to establish communication. The main parameters are: Station address, ID number, baudrate, and config data (the configuration data for the output and input length).

Connections

This interface is used to connect Box iPC to remote equipment, via a cable. The connector is a D-Sub 9-pin plug connector.

If you use a long PLC cable to connect to the Box iPC, the cable can be at an electrical potential that is different from the electrical potential of the panel, even if both are connected to ground.

The table shows the D-Sub 9-pin assignments:

Pin	Assignment	Description	D-Sub 9-pin plug female connector
1	–	–	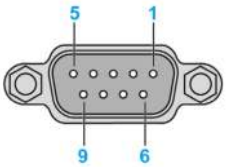
2	–	–	
3	RxD/TxD-P	Receive/Send Data-P connection B plug	
4	–	–	
5	GND	Reference potential	
6	VP	Positive supply voltage	
7	–	–	
8	RxD/TxD-N	Receive/Send Data-N connection A plug	
9	–	–	

Any excessive weight or stress on communication cables may disconnect the equipment.

⚠ CAUTION

LOSS OF POWER

- Ensure that communication connections do not place excessive stress on the communication ports of the Harmony Industrial PC.
- Securely attach communication cables to the panel or cabinet.
- Use only D-Sub 9-pin cables with a locking system in good condition.

Failure to follow these instructions can result in injury or equipment damage.

Compatibility Table

Part number	Description	HMIBMU/HMIBMP	HMIBMI/HMIBMO Expandable
HMIYMINPRO1	Interface Profibus w/NVRAM, 128 Mb + ML	Yes	Yes

Cable Routing

Box iPC Optimized:

Box iPC Universal/Box iPC Performance:

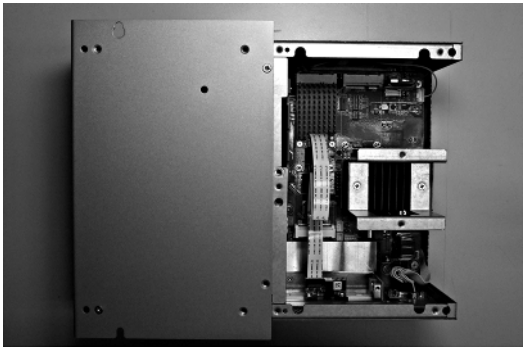

Device Manager and Hardware Installation

Install the optional interface into the Box iPC first, then install the driver. The driver installation media is included in the recovery media (USB key). After the interface is installed, you can verify whether it is properly installed on your system through the **Device Manager**.

Wireless LAN Interface Card Description

Introduction

There are two types of Wireless LAN Module in optional list, with Mini PCIe interface.

Part number	Characteristics
HMIYMINWIFI1	Wireless LAN, Mini PCIe (Half-size), MHF2
HMIYMINWIFI2	Wireless LAN, Mini PCIe (Full-size), MHF4

The HMIYMINWIFI1 is categorized as a local area wireless for USB-equipped wireless embedded systems. It does not use the mini PCIe slot (Intel dual band wireless-AC 3160). Wireless LAN direct support to connect wireless LAN devices to each other with no need for a wireless access point.

The figure shows the wireless LAN interface card:

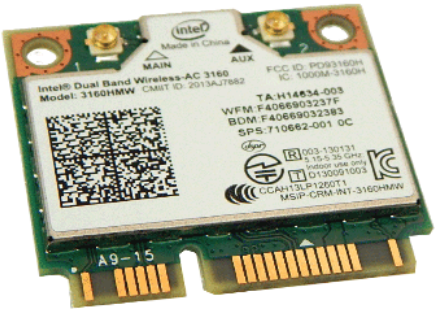

The HMIYMINWIFI2 is the IEEE 802.11ac/a/b/g/n 2 x 2 MIMO WLAN and Bluetooth.

HMIYMINWIFI2 module adopts QCA6174A single chip solution. The module design is based on the QCA6174A solution.

HMIYMINWIFI2 is a highly integrated wireless local area network (WLAN) solution to let users enjoy the digital content through the latest wireless technology without using the extra cables and cords. It combines with Bluetooth 4.1 and provides a complete 2.4 GHz Bluetooth system which is fully compliant to Bluetooth 4.1 and V2.1 that supports EDR of 2 Mbps and 3 Mbps for data and audio communication. It enables a high performance, cost effective, low power, and compact solution.

Compliance with the IEEE 802.11ac/a/b/g/n standard, the HMIYMINWIFI2 uses Direct Sequence Spread Spectrum (DSSS), Orthogonal Frequency Division Multiplexing (OFDM), DBPSK, DQPSK,CCK and QAM baseband modulation technologies. A high level of integration and full implementation of the power management functions specified in the IEEE 802.11 standard minimize the system power requirements by using HMIYMINWIFI2.

The figure shows the wireless LAN interface card:

Wireless LAN Interface Card Description

Model Number	HMIYMINWIFI1	HMIYMINWIFI2
Main Unit	Intel AC3160	Qualcom QCA6174A
Unit Board size	Min PCIe Half-size	Mini PCIe Full-size
Standard Conformance	802.11 ac + Bluetooth 4.0	802.11 ac/a/b/g/n + Bluetooth 4.1
Operating Temperature	0 °C to 80 °C	-20 °C to 65 °C Extended Operating Temperature: -20 °C to 85 °C (There will be 30~50 Mbps reduced throughput at some data rate at 85 °C)
TX/RX Stream	1 x 1	2 x 2
Wireless Band	2.4 GHz, 5 GHz	2.4 GHz, 5 GHz
Peak speed	433 Mbps	867 Mbps
MU-MIMO*	NO	YES
Connector for Antenna cable	MHF2	MHF4
Certification	FCC, RED, TELEC, RCM	FCC, RED, RCM, IC, CE, CMIIT, NCC, Mexico, ANATEL, IDA, TELEC ….WW

Model Number	HMIYMINWIFI1	HMIYMINWIFI2
Content of this product	1. Wireless LAN Board (Mini PCIe Half-size Board) 2. Wiring set (MHF2 Connector) ❍ 2 Wiring cables (MHF2 Connector) ❍ I/F attachment ring (3parts x 2 pieces) ❍ I/F mounting plate 3. 2 Antennas 4. Screws (2 pieces) 5. Installation Guide 6. Mounting spacer plate to Box PC mini PCIe Half-size to full-size	1. Wireless LAN Board (Mini PCIe Full-size Board) 2. Wiring set (MHF4 Connector) ❍ 2 Wiring cables (MHF4 Connector) ❍ I/F attachment ring (3 parts x 2 pieces) ❍ I/F mounting plate 3. 2 Antennas 4. Screws (2 pieces) 5. Installation Guide
Supported OS	Windows® 10 (32, 64 bit) Windows® 8.1 (32, 64 bit) Windows® 7 (32, 64 bit) Windows® Embedded Standard 7 (32, 64 bit)	Windows® 10 (32, 64 bit) Windows® 8.1 (32, 64 bit) Windows® 7 (32, 64 bit) Windows® Embedded Standard 7 (32, 64 bit)
Connectable iPC	*See the compatibility Table below.	*See the compatibility Table below.

Wireless LAN Interface Cable Description

The table shows technical data for the wireless LAN interface cable and antenna:

Part number	Characteristics
HMIYCABWIFIAN51	Remote wireless LAN antenna cable 5 m (16.4 ft)

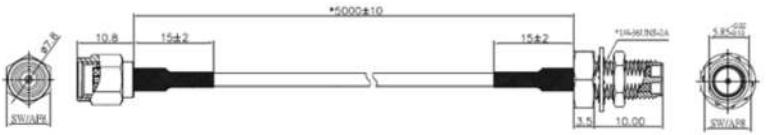

NOTE: The antennas are mounted directly on the product to the specific location. They can also be mounted remotely using intermediate cables. The figure shows the dimensions of the remote wireless LAN antenna cable.

Compatibility Table and Cable Routing

With pre-install antenna cables to WLAN A and WLAN B SMA connector:

HMIYMINWIFI1

HMIYMINWIFI1

	HMIBMO / HMIBMI	HMIBMP / HMIBMU
	PV = 01+	PV = 01~ 08
	NOT OK	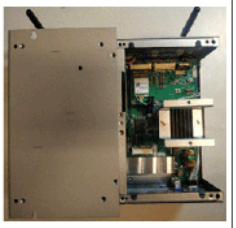

HMIYMINWIFI2

HMIYMINWIFI2

	HMIBMO / HMIBMI	HMIBMP / HMIBMU
	PV = 01+	PV = 09+

With optional interface slot:

HMIYMINWIFI1 / HMIYMINWIFI2

HMIYMINWIFI1 / HMIYMINWIFI2

	HMIBMO / HMIBMI	HMIBMP / HMIBMU
	PV = 01+	PV = 01+
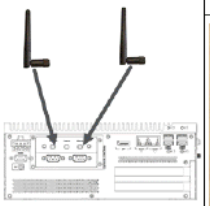	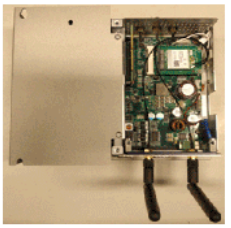	

Device Manager and Hardware Installation

Install the driver before you install the interface into the Box iPC. The driver installation media is included with the package. After the interface is installed, you can verify whether it is properly installed on your system through the **Device Manager**.

Audio Interface (for Box iPC Universal/Performance) Description

Introduction

The HMIYMINAUD1 is categorized as an audio interface (line in, line out, Mic in). The audio interface is composed of an audio I/O board (include metal plate), a cable for connecting I/O board and the Box iPC.

The figure shows the audio interface:

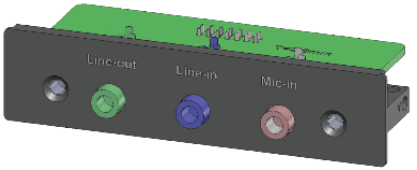

The figure shows the dimensions of the audio interface cable:

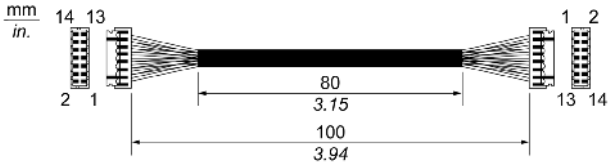

Audio Interface

The table shows technical data for the audio interface:

Element	Characteristics
Connectors	line in, line out, mic in
Audio output type	stereo

Compatibility Table

Part number	Description	HMIBMP/HMIBMU	HMIBMI/HMIBMO Expandable
HMIYMINAUD1	Interface audio BKT, 1 x LI/LO/MIC	Yes(1)	N/A
(1) Only support one HMIYMINAUD1.			

Cable Routing

Box iPC Universal/Box iPC Performance:

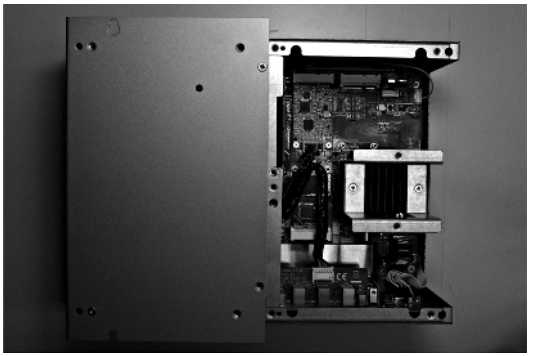

Audio Interface Description

Introduction

The HMIYMINAUD21 is categorized as an audio interface (line in, line out, Mic in). The audio interface is composed of an audio I/O board (include metal plate), a cable for connecting I/O board and the Box iPC.

The figure shows the audio interface:

Audio Interface

The table shows technical data for the audio interface:

Element	Characteristics
Connectors	Line in, line out, mic in
Audio output type	Stereo

Compatibility Table

Part number	Description	HMIBMP/HMIBMU	HMIBMI/HMIBMO Expandable
HMIYMINAUD21	Interface audio BKT, 1 x LI/LO/MIC	Yes(1)	Yes
(1) Only support one HMIYMINAUD1.			

Cable Routing

Box iPC Optimized:

Box iPC Universal/Box iPC Performance:

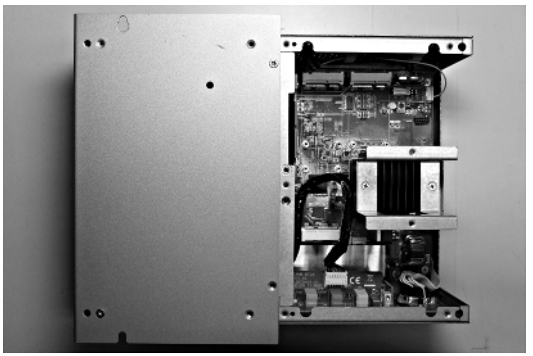

Installation Remark

HMIBMP/HMIBMU has Line in/Line out/MIC already and suggest buying HMIYMINAUD1.

Interface Installation

Before installing or removing a mini PCIe card, shut down Windows operating system in an orderly fashion and remove the power from the device.

NOTICE

ELECTROSTATIC DISCHARGE

Take the necessary protective measures against electrostatic discharge before attempting to remove the Harmony Industrial PC cover.

Failure to follow these instructions can result in equipment damage.

⚠ CAUTION

OVERTORQUE AND LOOSE HARDWARE

- Do not exert more than 0.5 Nm (4.5 lb-in) of torque when tightening the installation fastener, enclosure, accessory, or terminal block screws. Tightening the screws with excessive force can damage the installation fastener.
- When fastening or removing screws, ensure that they do not fall inside the Harmony Industrial PC chassis.

Failure to follow these instructions can result in injury or equipment damage.

NOTE: Remove the power before attempting this procedure.

The table describes how to install an audio:

Step	Action
1	Release the screw: 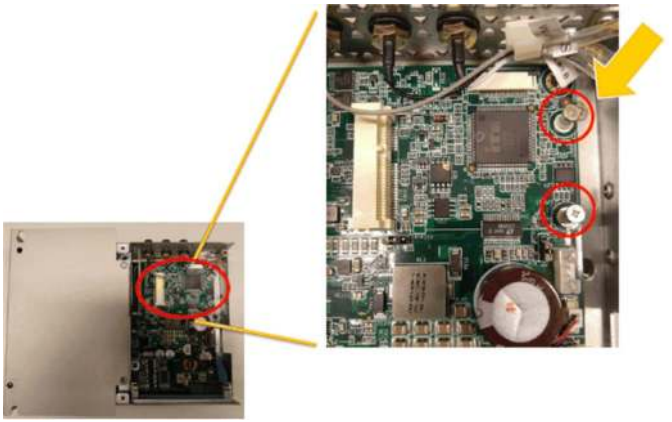
2	Install audio mini PCIe card in the connector: 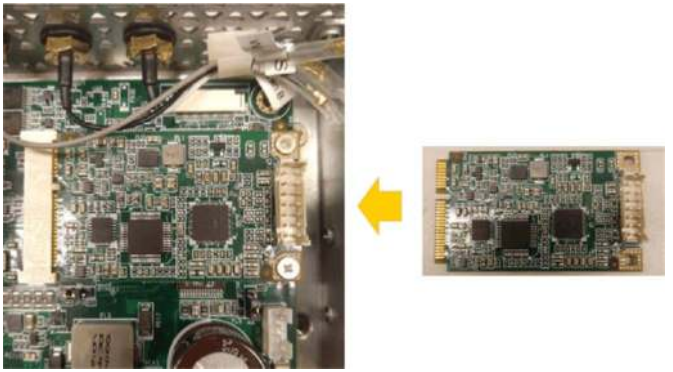

Step	Action
3	Tear down optional interface bracket: 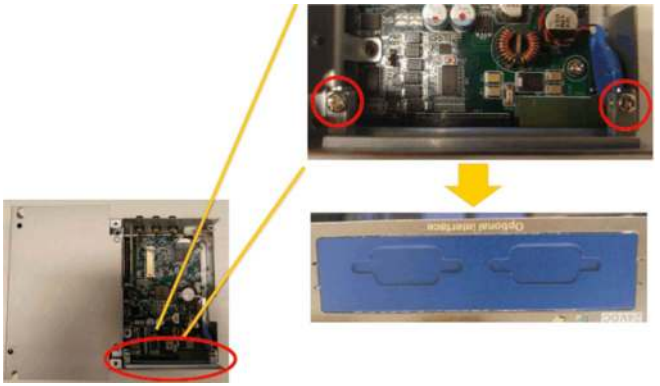
4	Install interface bracket and connect the cable: 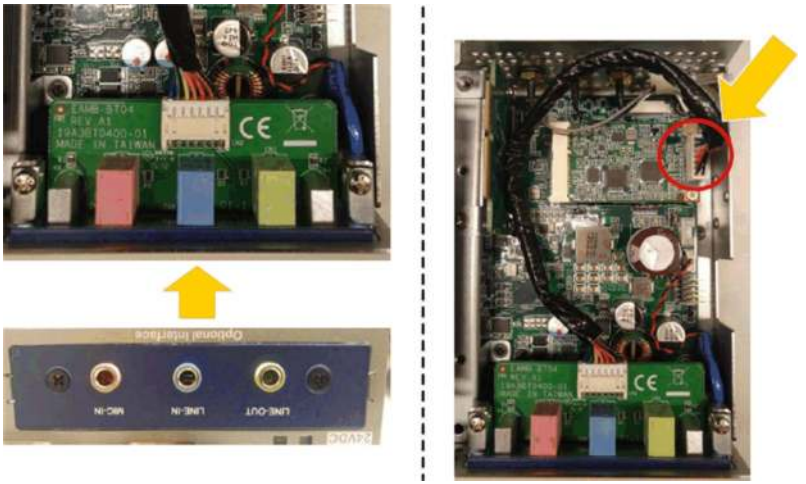

USB Interface Description

Introduction

The HMIYMINUSB1 are categorized as communication modules. It is all compatible with the mini PCIe card.

The figure shows the USB interface:

The figure shows the dimensions of the USB interface:

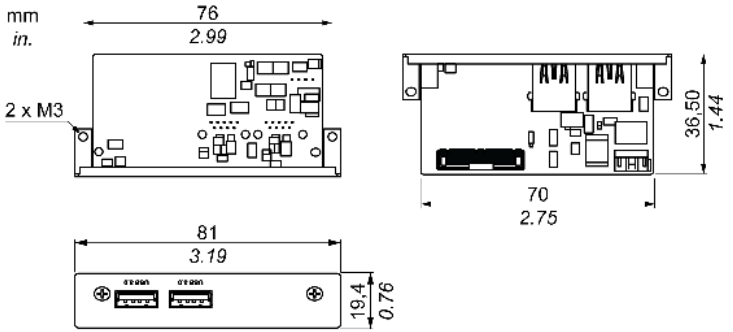

USB Interface

The table shows technical data for the USB interface:

Element	Characteristics
General	
Bus type	Mini PCIe card revision 1.2
Connector	2 x ports USB 3.0
Power consumption	+5 Vdc / 900 mA power output to USB device
Communication	
Protocol	Universal serial Bus 3.0 specification Rev. 1.0
Speed	Low speed: 1.5 Mb/s, full speed: 12 Mb/s, high speed: 480 Mb/s, super speed: 5 Gb/s

Compatible Table

Part number	Description	HMIBMP/HMIBMU	HMIBMI/HMIBMO Expandable
HMIYMINUSB1	Interface USB 3.0, 2 x USB	Yes(1)/(2)(3)	Yes(3)
(1) Only support one HMIYMINUSB1 in HMIBMP/HMIBMU. (2) HMIYMINDP1 and HMIYMINUSB1 cannot use together in HMIBMP/HMIBMU. (3) Remove the existing driver when you want to install HMIYMINDP1.			

Cable Routing

Box iPC Optimized:

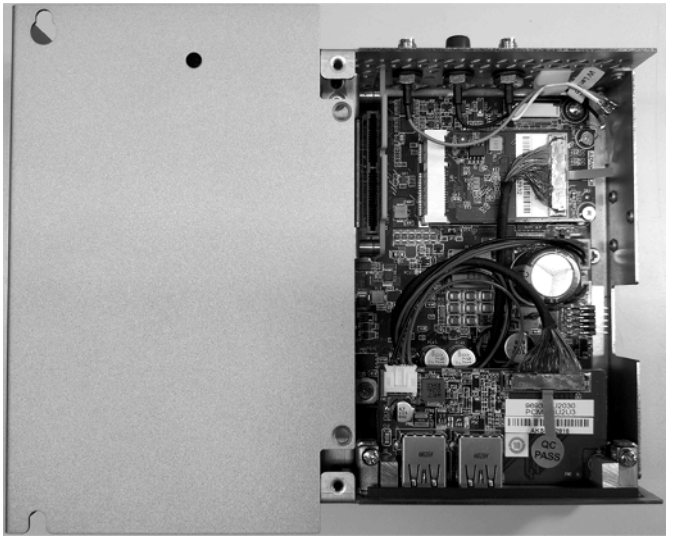

Box iPC Universal/Box iPC Performance:

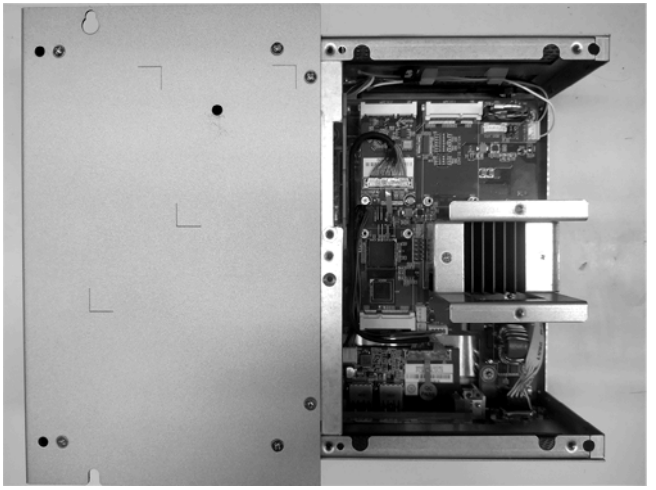

Device Manager and Hardware Installation

Install the optional interface into the Box iPC first, then install the driver. The driver installation media is included in the recovery media (USB key). After the interface is installed, you can verify whether it is properly installed on your system through the **Device Manager**.

NVRAM Card Description

Introduction

The HMIYMINNVRAM1 is categorized as industrial storage or a memory card for the mini PCIe slot.

The figure shows the NVRAM card:

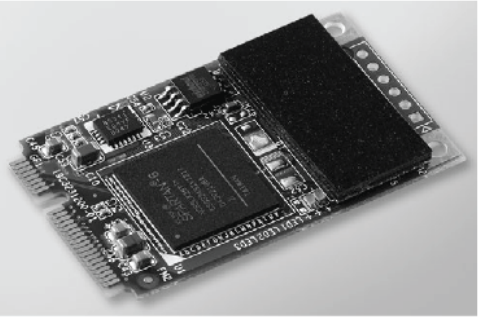

NVRAM Card Description

The table shows the technical data of the NVRAM card:

Features	Values
General	
Bus type	mini PCIe card revision 1.2
Power consumption	3.3 Vdc at 150 mA
Memory	
Size	2 MB
Read/write speed	6 Mb/s
Maximum magnetic field immunity during writing	8000 A/m
Maximum magnetic field immunity during read or standby	8000 A/m

Compatibility Table

Part number	HMIBMU/HMIBMP	HMIBMI/HMIBMO
HMIYMINNVRAM1	Yes	Yes

Device Manager and Hardware Installation

Install the optional interface into the Box iPC first, then install the driver. The driver installation media is included in the recovery media (USB key). After the interface module is installed, you can verify whether it is properly installed on your system through the **Device Manager**.

mini PCIe to Display Adapter Interface Description

Introduction

The HMIYMINDP1 is categorized as industrial communication interface.

The mini PCIe to Display Adapter Interface:

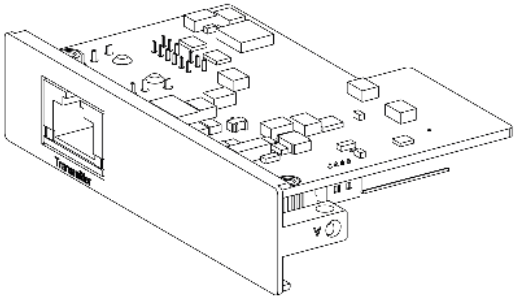

Dimensions of the mini PCIe to Display Adapter Interface:

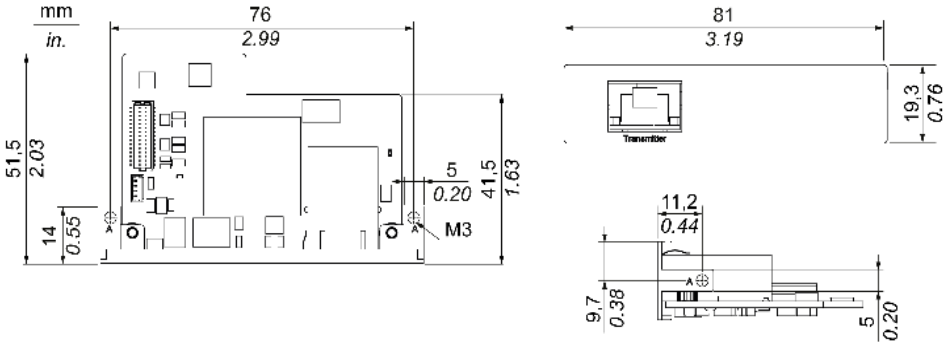

Description

Technical data for the mini PCIe to Display Adapter Interface:

Features	Values
General	
Bus type	mini PCIe card revision 1.2
Connectors	RJ45 port x1
Power consumption	Max. 3.3 W
Optional temperature	0...45 °C (113 °F)
Communication	
Graphic support	Support 2D
Output interface	RJ45
Output resolution	Up to 1920 x 1080
Point-to-point transmit distance	100 m (328 ft)
Cable	CAT6 Ethernet cable (CAT5e under condition, see note below)

NOTE: The CAT5e cable may be used for limited length, according to environment conditions and with the maximum screen resolution of 1920 x 1080 pixels.

Compatible Table

Part number	Description	HMIBMP/HMIBMU	HMIBMI/HMIBMO Expandable
HMIYMINDP1	mini PCIe to Display Adapter Interface	Yes(1)/(2)/(3)	Yes(3)
NOTE: HMIYMINDP1 with Box iPC is target to bundle with DM and the Display Adapter together for long-distance purpose. (1) HMIYMINDP1 cannot use with HMIYMINDVII1 or HMIYMINVGADVID1. (2) HMIYMINDP1 cannot use with HMIYMINUSB1.			

Cable Routing

Box iPC Optimized:

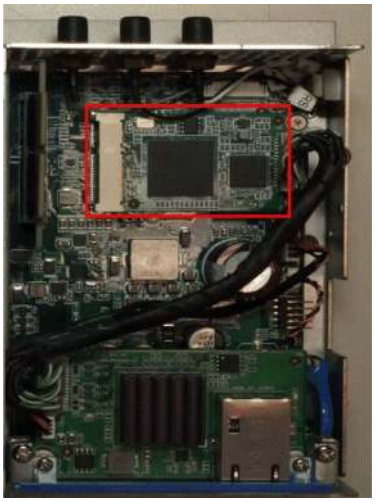

Box iPC Universal/Box iPC Performance:

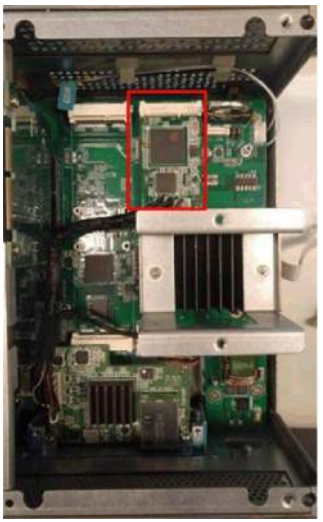

NOTE:

- Only one optional HMIYMINDP1 interface can be installed in the Box iPC.
- Install the optional HMIYMINDP1 interface in the top slot *(see page 211)* of the Box iPC Universal/Box iPC Performance and the mini PCIe card on the second slot.

Box iPC Universal/Box iPC Performance with two optional Interfaces:

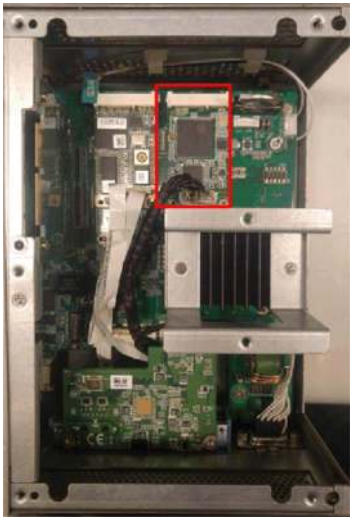

Device Manager and Hardware Installation

The driver installation media is included in the recovery media (USB key). After the interface is installed, you can verify whether it is properly installed on your system through the **Device Manager**.

Remote Displays Installation and Transmitter for Remote Display Driver Installation

Use this process to install the mini PCIe to Display Adapter Interface and the remote displays:

Step	Action
1	Connect the mini PCIe to Display Adapter Interface to the Display Adapter (see remote display configuration *(see page 65)*). 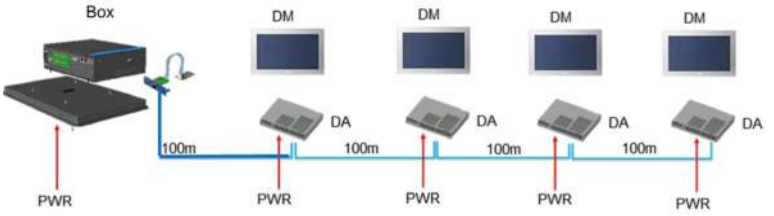 **NOTE:** ● Use the CAT5e/CAT6 cable to connect the mini PCIe Interface and the first Display Adapter Receiver module. Use the CAT5e/CAT6 cable to connect the Transmitter module to the Receiver module of the next Display Adapter ● To set up the mini PCIe to Display Adapter Interface, you need to install the driver in display on host PC. ● If host has not a display, then use the Box iPC DP port to connect the third-party panel.
2	Open the **Optional Interfaces drivers** folder and select **Transmitter Interface**: 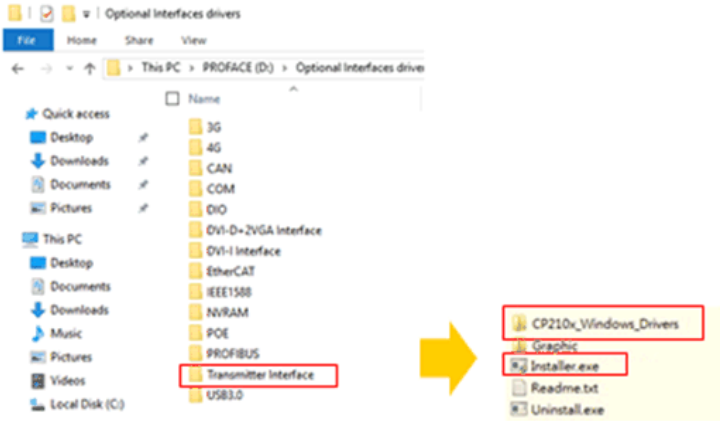
3	Execute **CP210x_Windows_Drivers\CP210xVCPInstaller_x64.exe or CP210xVCPInstaller_x86.exe**.
4	Execute **Graphic\Win7\setup.exe or Graphic\Win8.1\setup.exe or Graphic\Win10\setup.exe** to install graphic driver.

Step	Action
5	Set up the first remote display to the recommended resolution. Refer to default resolution setting *(see page 67)*.
6	For display on host PC: **1.** Set tablet PC for each remote displays. **2.** Do calibration for 4:3 12” and 4:3 15” (resistive) only if touch calibration is not correct. 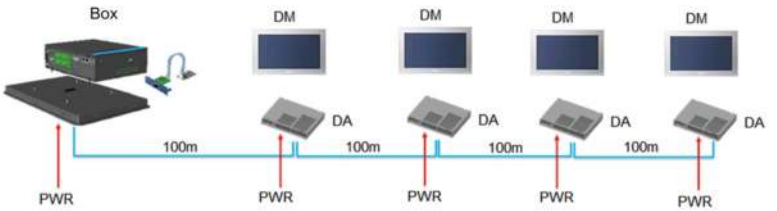 **DM** Display module **DA** Display Adapter **PWR** Power
7	Once the remote displays set up are ready, the display on host PC can be removed if not used. 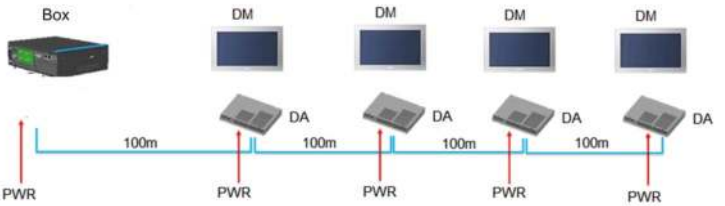

Transmitter for Remote Display Driver Uninstall

Step	Action
1	Execute **Setup.exe** to uninstall the mini PCIe to Display Adapter Interface driver and graphic driver.

VGA and DVI Interface Description

Introduction

The HMIYMINVGADVID1 (interface 2 x VGA and 1 x DVI-D) is categorized as industrial module. It is compatible with the mini PCIe card. The Video Graphic card supports Full HD 1920 x 1080 definition and dual display mode. Two different screen images can be displayed on the two VGA ports (DVI-D is clone image of the first VGA). The two VGA connectors with analog signal require one optional interface slot, and the DVI-D connector with digital signal requires a second optional interface slot.

The HMIYMINDVII1 (interface 1 x DVI-I) is categorized as industrial module. It is compatible with the mini PCIe card. The DVI-I connector requires one external interface slot.

Harmony Box iPC supported:

Supported Model	VGA-0	VGA-1	DVI-D	DVI - I
Box iPC Optimized/Universal/Performance (1 optional interface)	–	–	–	Independent (extend)
Box iPC Universal/Performance (2 optional interface)	Independent (extend)	Clone		–

NOTE: It supports only 2D function when you use interface of VGA/DVI mini PCIe card display as main display.

HMIYMINVGADVID1 Optional Interface

The figure shows the HMIYMINVGADVID1 optional interface for 3 displays:

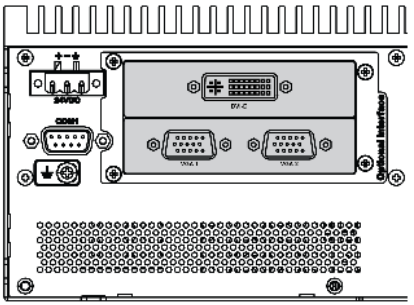

Two VGA for connection up to two displays (CN1):

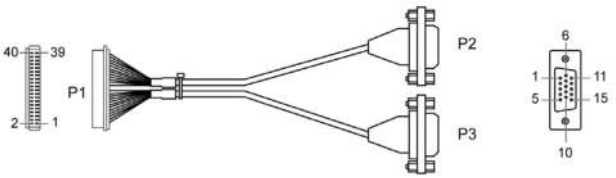

One DVI-D for connection up to one display (CN2):

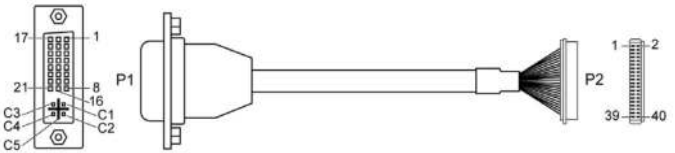

mini PCIe graphic card (1080 pixels) 1920 x 1080, vertical refresh rate up to 75 Hz:

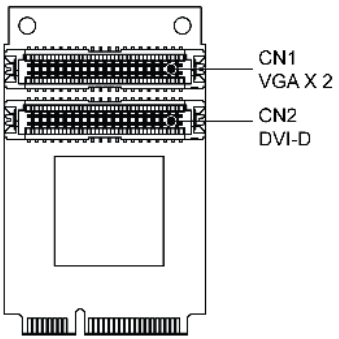

NOTE: Dual display mode (CRT+CRT, supports single, clone, and dual mode).

HMIYMINDVII1 Optional Interface

The figure shows the HMIYMINDVII1 optional interface for 2 displays:

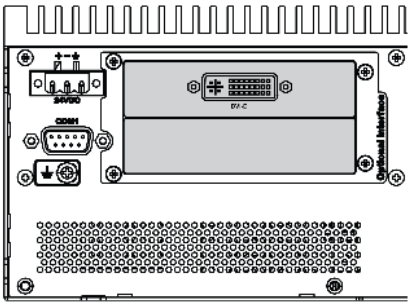

DVI-I cable with Y connection A and B:

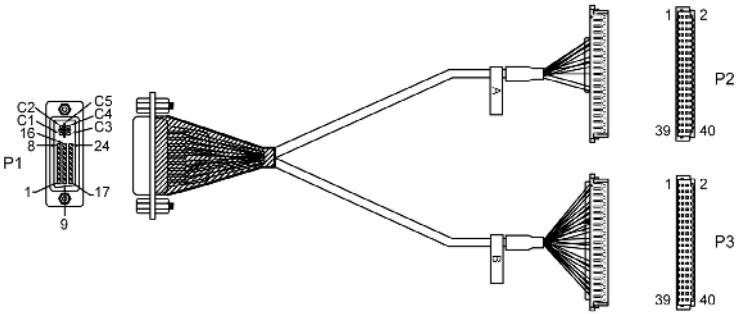

mini PCIe graphic card (1080 pixels) 1920 x 1080, vertical refresh rate up to 75 Hz:

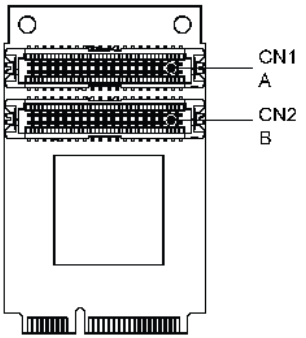

NOTE: On card has tape A on CN 1 and tape B on CN2. The cable A connect to A on mini PCIe module (CN1) and cable B connector to B on mini PCIe module (CN2).

Compatibility Table

Part number	Description	HMIBMP/HMIBMU	HMIBMI/HMIBMO Expandable
HMIYMINVGADVID1	Interface 1 DVI-D, 2 x VGA, two brackets	Yes(2)/(3)/(4)	Yes(1)/(4)
HMIYMINDVII1	Interface 1 DVI-I	Yes(2)/(3)/(4)	Yes(4)
(1) Only support one Interface bracket; either with 2 x VGA or DVI-D bracket. (2) HMIYMINDVII1 and HMIYMINVGADVID1 cannot use together. (3) HMIYMINDP1 cannot use with HMIYMINDVII1 or HMIYMINVGADVID1. (4) Remove the existing driver when you want to install HMIYMINDP1 or HMIYMINDVII1 or HMIYMINVGADVID1.			

Cable Routing

Box iPC Optimized and HMIYMINVGADVID1:

Box iPC Optimized and HMIYMINDVII1:

Box iPC Optimized and HMIYMINVGADVID1:

Box iPC Universal/Box iPC Performance and HMIYMINVGADVID1:

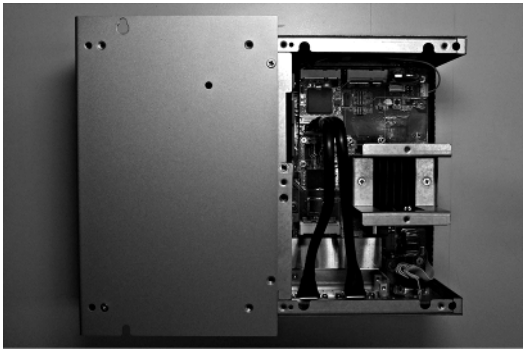

Box iPC Universal/Box iPC Performance and HMIYMINDVII1:

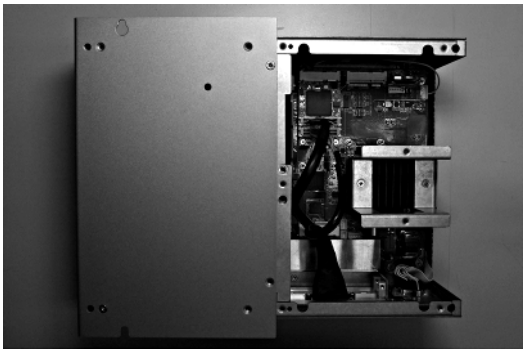

Interface Installation

Before installing or removing a mini PCIe card, shut down Windows operating system in an orderly fashion and remove the power from the device.

NOTICE
ELECTROSTATIC DISCHARGE Take the necessary protective measures against electrostatic discharge before attempting to remove the Harmony Industrial PC cover. **Failure to follow these instructions can result in equipment damage.**

⚠ CAUTION
OVERTORQUE AND LOOSE HARDWARE ● Do not exert more than 0.5 Nm (4.5 lb-in) of torque when tightening the installation fastener, enclosure, accessory, or terminal block screws. Tightening the screws with excessive force can damage the installation fastener. ● When fastening or removing screws, ensure that they do not fall inside the Harmony Industrial PC chassis. **Failure to follow these instructions can result in injury or equipment damage.**

NOTE: Remove the power before attempting this procedure.

The table describes how to install a VGA or DVI interface of the Box iPC Universal/Performance:

Step	Action
1	Release the screw: 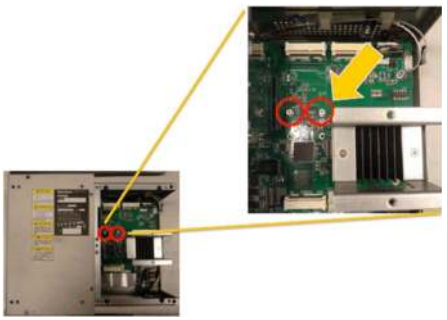

Step	Action
2	Install the mini PCIe card in the connector: 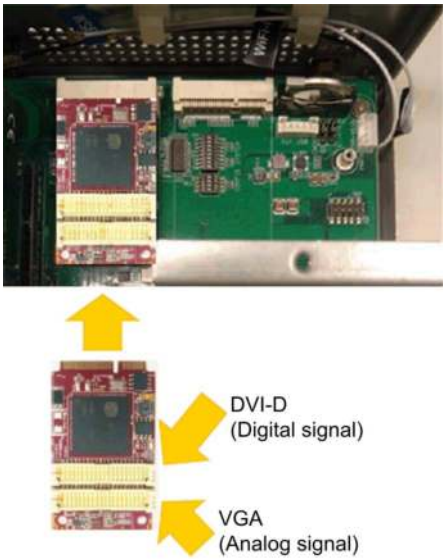
3	Tear down optional interface bracket: 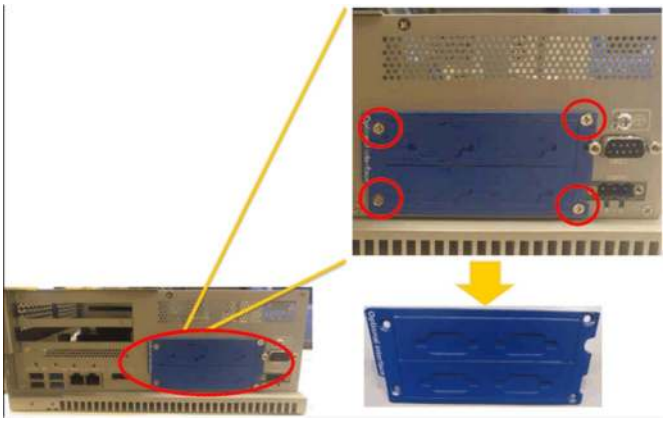

Step	Action
4	2 x VGA: 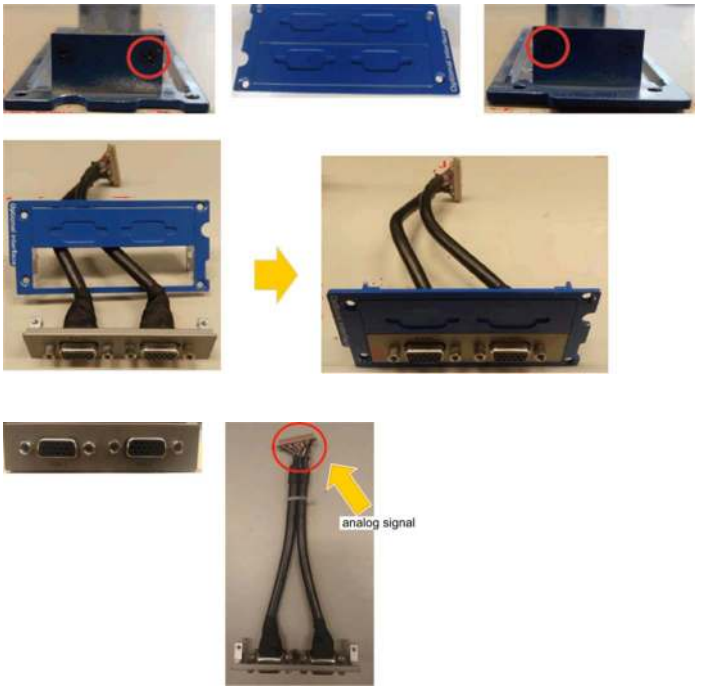

Step	Action
5	DVI-I: 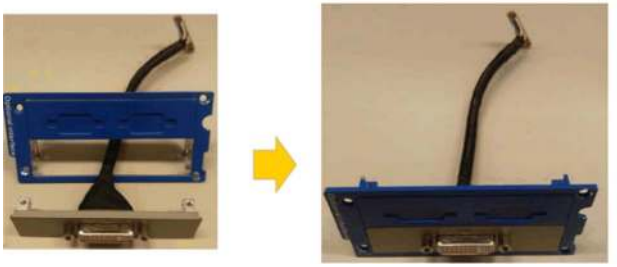 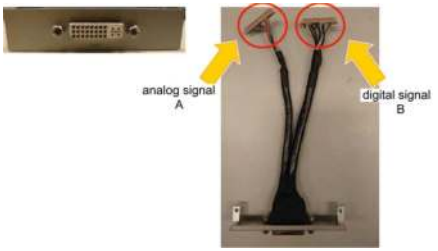 DVI-D:

Step	Action
6	Lock screws: 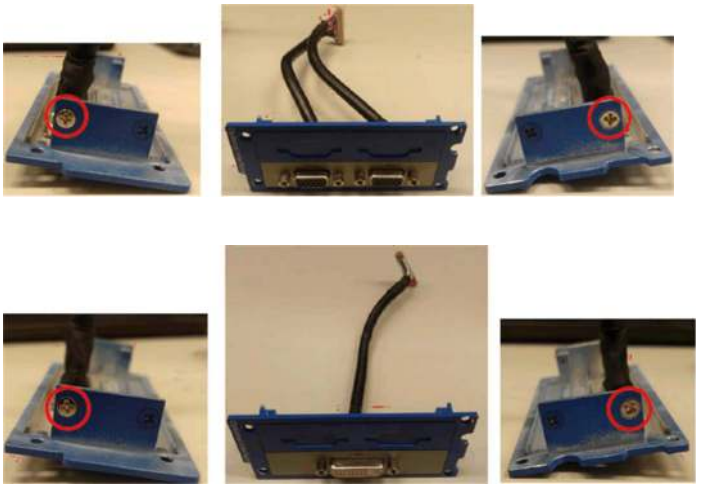
7	Install 2 x VGA interface bracket and connect the cable (analog signal): 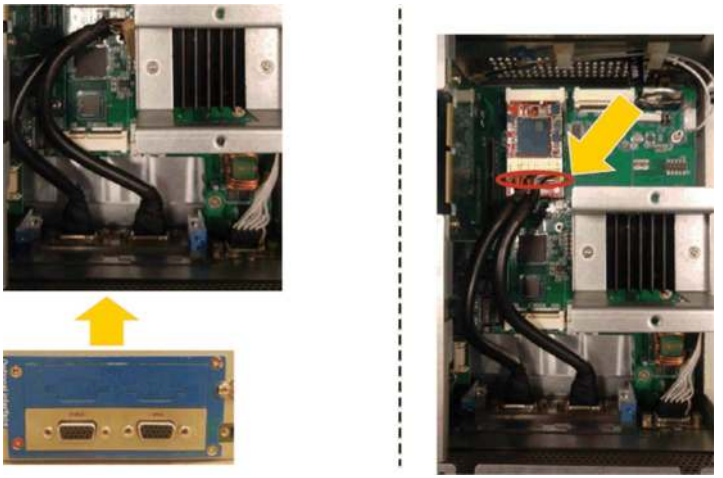

Step	Action
8	Install DVI-D interface bracket and connect the cable (digital signal): 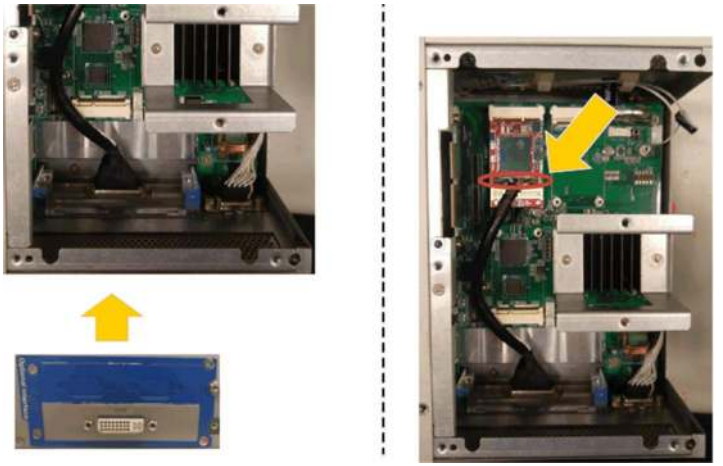 Install DVI-I interface bracket and connect the cable (analog signal): 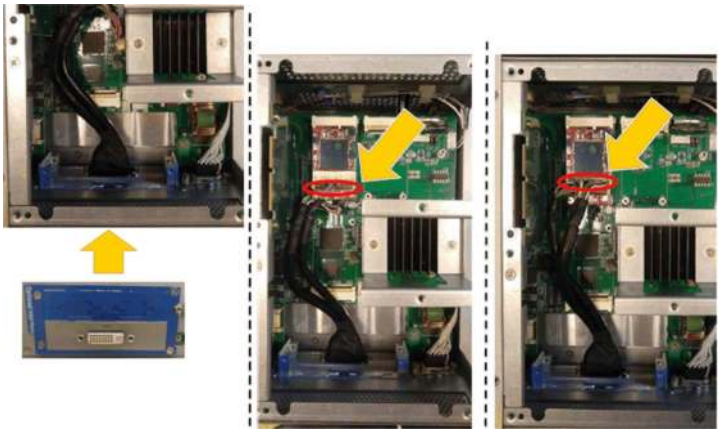

The table describes how to install a VGA or DVI interface of the Box iPC Optimized:

Step	Action
1	Release the screw: 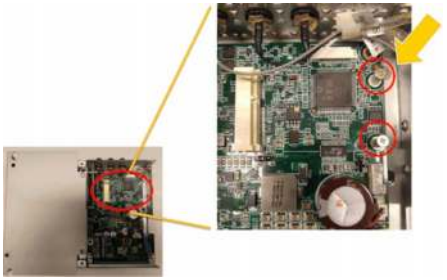
2	Install the mini PCIe card in the connector: 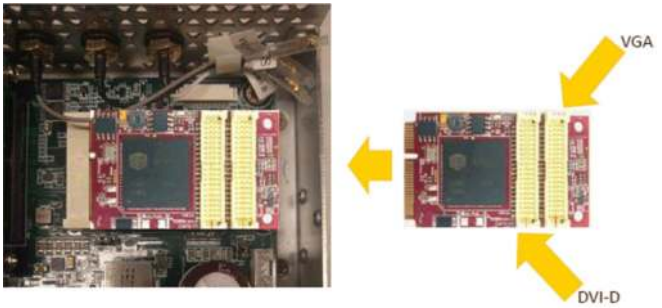
3	Tear down optional interface bracket: 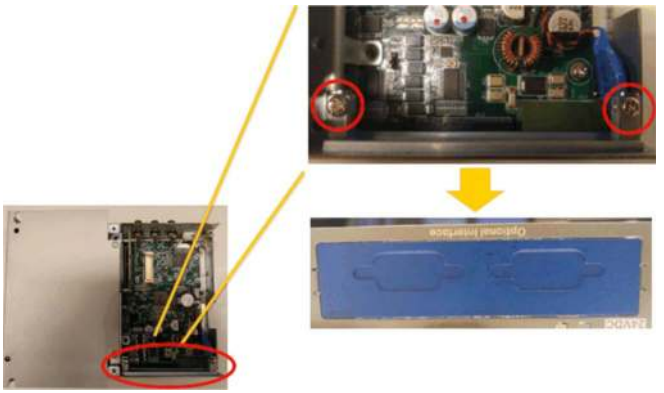

Step	Action
4	2 x VGA: 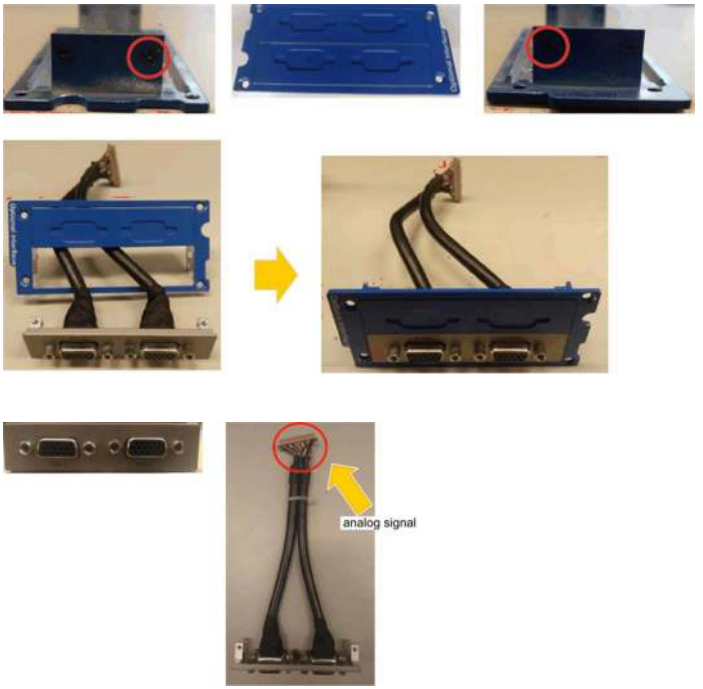

Step	Action
5	DVI-I: 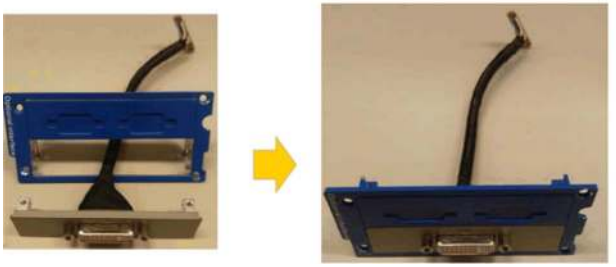 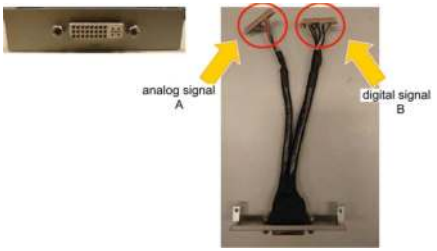 DVI-D:

Step	Action
6	Lock screws: 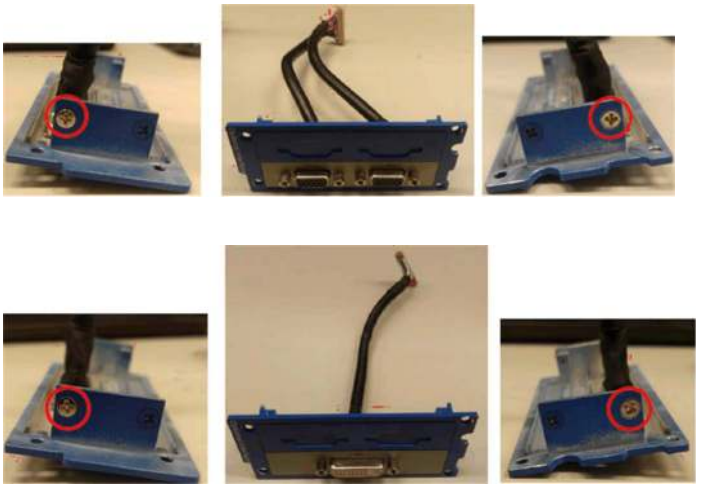
7	Install 2 x VGA interface bracket and connect the cable (analog signal): 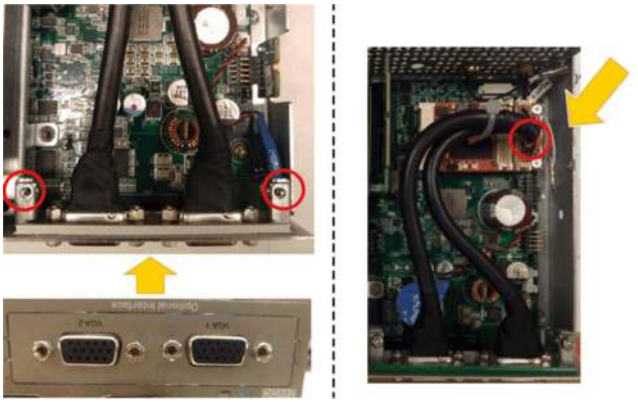 **NOTE:** The requirement of Phillips screw driver is type size 2. The recommended torque to tighten these screws is 0.5 Nm (4.5 lb-in).

Step	Action
8	Install DVI-D interface bracket and connect the cable (digital signal): 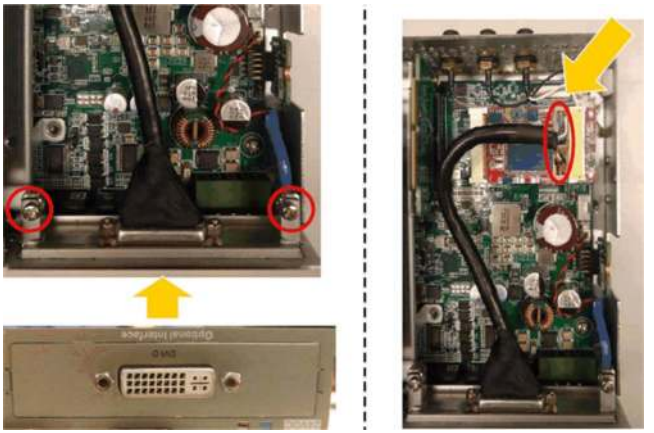 **NOTE:** The requirement of Phillips screw driver is type size 2. The recommended torque to tighten these screws is 0.5 Nm (4.5 lb-in).
9	Install DVI-I interface bracket and connect the cable (analog signal): 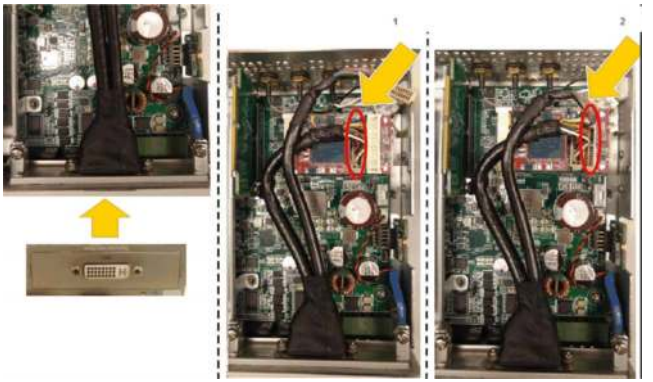 **NOTE:** The requirement of Phillips screw driver is type size 2. The recommended torque to tighten these screws is 0.5 Nm (4.5 lb-in).

Device Manager and Hardware Installation

Install the optional interface into the Box iPC first, then install the driver. The driver installation media is included with the USB memory key of the Box iPC. After the interface is installed, you can verify whether it is properly installed on your system through the **Device Manager**.

Graphic Setting

For each display, a software tool is available to enable/disable touch-panel operation. You can disable up to three touch panels to monopolize the touch operation, the display order must match the tool. The exclusive **Touch** function is set to be effective for 100 ms even after a finger leaves the display.

Check that the BIOS Graphic of the Box iPC is set to {IGFX}, as follows:

1. **BIOS → Chipset → System Agent (SA) Configuration**
2. **Graphics configuration**
3. **Primary Display → IGFX**
4. **Save** and exit BIOS

GPRS Description

Introduction

The HMIYMINGPRS1 is categorized as a GPRS (general packet radio service). It provides a cost effective solution for wireless remote connection to distributed installations over the Internet. It is compatible with the mini PCIe card with SIM card holder.

GPRS is a packet-oriented data service based on GSM (global system for mobile). It offers the advantages to pay only for the total volume of data exchanged (in MB per month) regardless of the connection time while data communication via traditional circuit switching (PSTN/GSM) is charged per minute of connection time.

GSM connections are used for on-demand services such as sending SMS alarms or basic remote services such as diagnostics.

GPRS is more suitable for permanent access to remote installations providing:
- Easy remote programming.
- Continuous remote monitoring and control.
- Transparent routing capabilities from the Internet to LAN networks or serial network devices connected to the Box iPC gateway.

In addition, GPRS provides higher data exchange rates than GSM:

	Upload	Download
Theoretical	24 kbps	48 kbps
Typical	16 kbps	20 kbps

NOTE: These values depend on your service provider, the distance between your GPRS interface and the base station, and the current traffic.

NOTE: If too many browsers are being used on a modem connection (GPRS, PSTN), performance may decrease and lead to difficulties with page refreshing.

The figure shows the GPRS interface:

NOTE: Use the GPRS SIM slot size 25 x 15 mm (0.98 x 0.59 in).

GPRS Interface Description

The table shows technical data for the GPRS interface:

Features	Values
General	
Bus type	mini PCIe card revision 1.2
Connector	1 x RF antenna coaxial connectors
Power consumption	3.3...3.6 Vdc < 700 mA (HSPA connected mode)
Peak current	1.5 A
Communication	
Protocol	UMTS/HSPA network: 800/850/900/1700/1900/2100 MHz EDGE/GPRS/GSM network: 850/900/1800/1900 MHz
Speed	Downlink: 7.2 Mb/s (HSDPA) Uplink: 5.76 Mb/s (HSUPA)
Dimensions (l x w x h)	50.85 x 29.9 x 6.2 mm (2.0 x 1.17 x 0.24 in)

Any excessive weight or stress on communication cables may disconnect the equipment.

⚠ CAUTION

LOSS OF POWER

- Ensure that communication connections do not place excessive stress on the communication ports of the Harmony Industrial PC.
- Securely attach communication cables to the panel or cabinet.
- Use only D-Sub 9-pin cables with a locking system in good condition.

Failure to follow these instructions can result in injury or equipment damage.

Compatibility Table

Part number	Description	HMIBMU/HMIBMP	HMIBMI/HMIBMO Expandable
HMIYMINGPRS1	Interface 3G, C109,1 x antenna	Yes	Yes

GPRS Remote Access

GPRS communication implies:
- The GPRS interface is connected to the Internet via the GPRS network.
- The remote PC or network is also connected to the Internet.

GPRS topologies can support:
- NAT (network address translation) routing tables for transparent routing to Ethernet devices
- security services such as IP address control or VPN tunnels for secured data exchange over the Internet

The following figure shows remote access to the network of the GPRS interface:

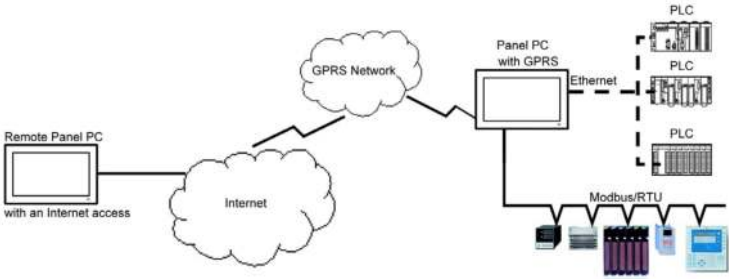

Connection Principles

GPRS communication requires a SIM card and a specific GPRS contract with a service provider.

The GPRS connection is always initiated from the interface to the GPRS network.

It is not possible for a client application to open a connection by directly dialing the GPRS interface. Nevertheless, the GPRS interface provides various solutions to connect to the GPRS network:

Permanent mode:
- Automatic connection at startup, restart or after connection loss.

On-demand mode:
- Callback function: opens the connection upon receiving an incoming GSM or PSTN call.
- Autonomously on a process or application condition.

The GPRS interface connects the APN (*access point name*) of the service provider and receives an IP address back that can be static or dynamic.

The GPRS interface supports both static and dynamic IP addresses. If the address is dynamic, it is necessary to inform the remote application of the new IP address.

NOTE:
- GPRS uses the DNS server of the service provider; it replaces the DNS server configured in the Box iPC.
- The default gateway set in the Ethernet configuration of the Box iPC is not used with a GPRS connection. The default route of the GPRS connection is used instead. Thus, it is not possible to route through Ethernet when the interface is connected to the GPRS network.

GPRS Contracts

GPRS service providers offer dedicated services adapted to industrial applications, also called M2M (*machine to machine*).

Service providers offer GPRS contracts with different options. The main options are:

- Public or private IP address: Choose a contract that gives you a public IP address to be accessible directly from the Internet.
- Static or dynamic IP address.
- Incoming TCP ports blocked or not: Some providers offer only subscriptions with TCP ports blocked for security reasons. For example, some provider block ports that are lower than 1024.

NOTE:

- For ease of use and configuration, you should choose a contract that does not block TCP ports and provides a static IP address.
- If your service provider blocks the public ports (< 1024), you must use a VPN and choose a contract that authorizes VPN traffic.

Cable Routing

Box iPC Optimized:

Box iPC Universal/Box iPC Performance:

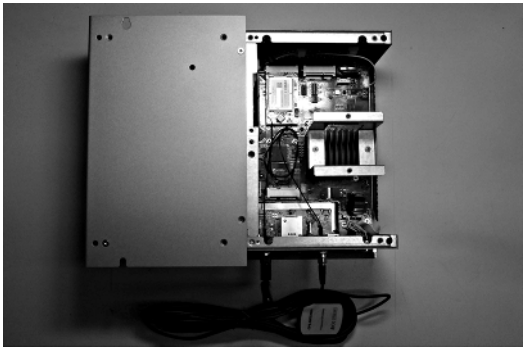

Device Manager and Hardware Installation

Install the optional interface into the Box iPC first, then install the driver. The driver installation media is included in the recovery media (USB key). After the interface is installed, you can verify whether it is properly installed on your system through the **Device Manager**.

4G Cellular Description

Introduction

The HMIYMIN4GEU1 and HMIYMIN4GUS1 are categorized as industrial communication modules.

The HMIYMIN4GEU1 is mini PCIe GPRS 4G for Europe and Asia frequencies.The kit including SIM card holder and external antennas.

The HMIYMIN4GUS1 is mini PCIe GPRS 4G for North America frequencies.The kit including SIM card holder and external antennas.

This figure shows the mini PCIe GPRS 4G cellular:

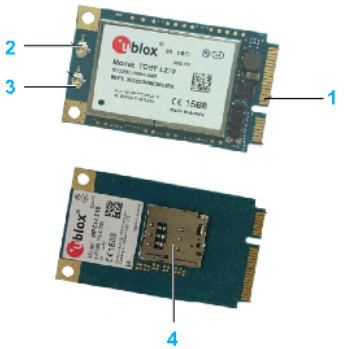

1 mini PCIe connector
2 RF main antenna connector (use this for connection to the Box iPC)
3 RF diversity antenna connector
4 SIM holder

NOTE: You can use the SIM holder (micro SIM 3FF, 12 x 15 mm) slot on 4G module to get 4G access.

Description

The table shows technical data:

Features	Values
General	
Bus type	SIM card
Power consumption	3.3 Vdc x 2.6 A
Optional temperature	0...45 °C (113 °F)

Compatibility Table

Part number	Description	HMIBMP/HMIBMU	HMIBMI/HMIBMO Expandable
HMIYMIN4GUS1	4G cellular for US, 1 x antenna	Yes	Yes
HMIYMIN4GEU1	4G cellular for EU/ASIA, 1 x antenna	Yes	Yes

Cellular View

Box iPC Optimized and HMIYMIN4GUS1:

Box iPC Optimized and HMIYMIN4GEU1:

Box iPC Universal/Box iPC Performance and HMIYMIN4GUS1:

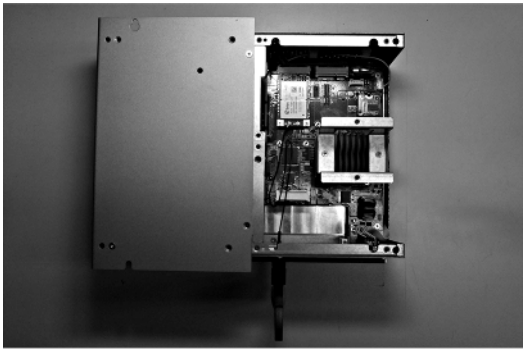

Box iPC Universal/Box iPC Performance and HMIYMIN4GEU1:

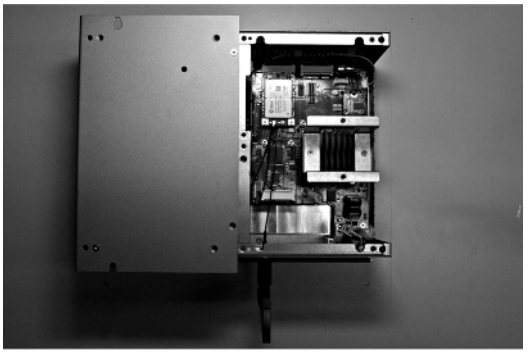

Cellular Installation

Before installing or removing a mini PCIe card, shut down Windows operating system in an orderly fashion and remove all power from the device.

NOTICE

ELECTROSTATIC DISCHARGE

Take the necessary protective measures against electrostatic discharge before attempting to remove the Harmony Industrial PC cover.

Failure to follow these instructions can result in equipment damage.

⚠ CAUTION

OVERTORQUE AND LOOSE HARDWARE

- Do not exert more than 0.5 Nm (4.5 lb-in) of torque when tightening the installation fastener, enclosure, accessory, or terminal block screws. Tightening the screws with excessive force can damage the installation fastener.
- When fastening or removing screws, ensure that they do not fall inside the Harmony Industrial PC chassis.

Failure to follow these instructions can result in injury or equipment damage.

NOTE: Remove the power before attempting this procedure.

There are two methods to install 4G cellular, either through optional interface, or directly using internal pre-install SMA cable to GPRS.

The table describes how to install an 4G cellular of the Box iPC Universal/Performance:

Step	Action
1	Release the screw: 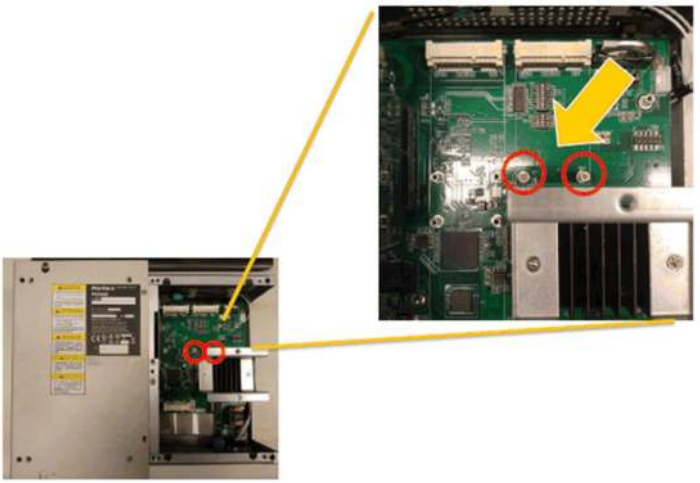
2	Install the 4G mini PCIe card in the connector: 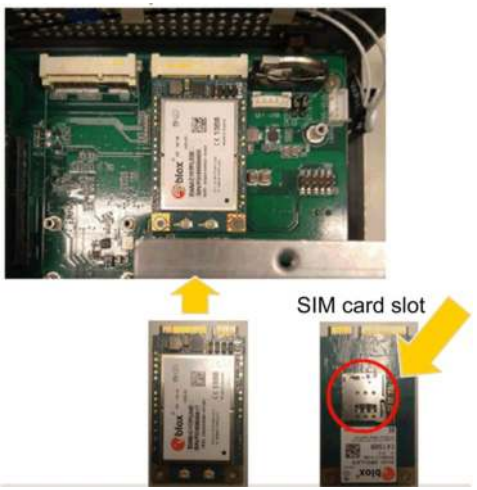

Step	Action
3	Put ring into the cable and the SMA cable into the bracket: **1** Ring
4	Put washer into the SMA connector and the combination nut: **1** Washer
5	Tear down optional interface bracket: 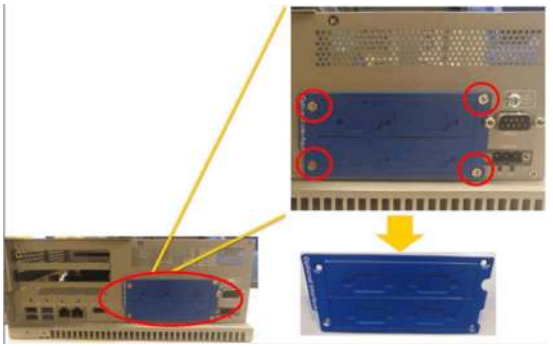

Step	Action
6	Release screws. Combination: 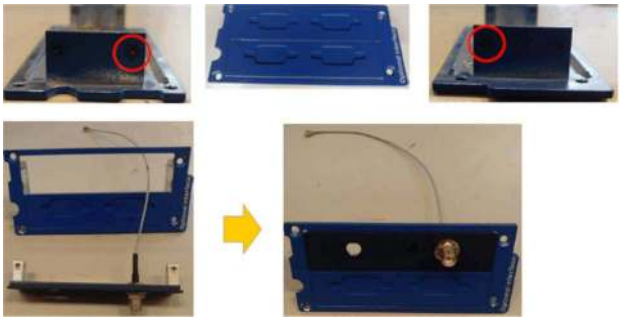
7	Install antenna interface bracket and connect the cable: 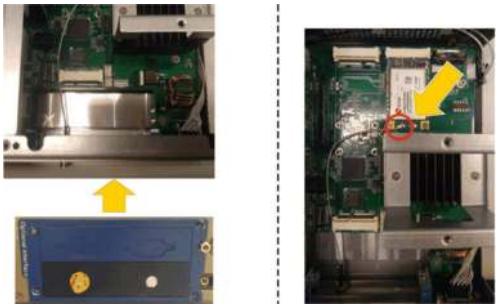 **NOTE:** When using a mini PCIe card with an external cable attached, install a clamp or other device to secure the cable.
8	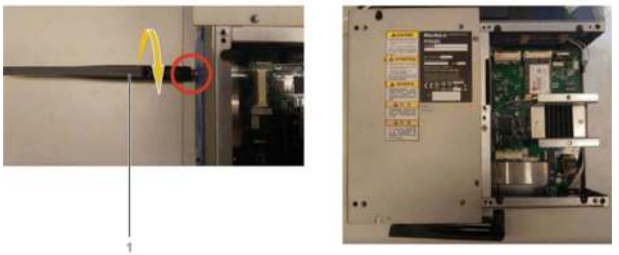 **1** Antenna

The table describes how to install an 4G cellular of the Box iPC Optimized:

Step	Action
1	Release the screw: 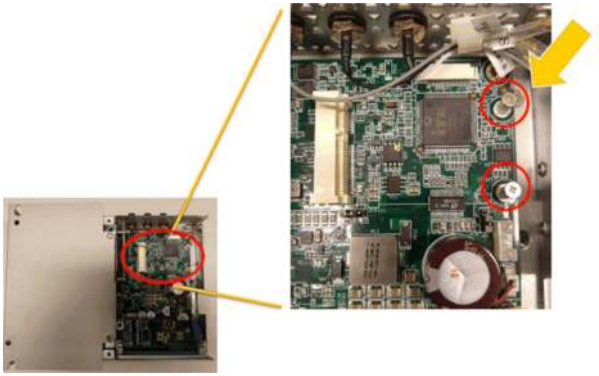
2	Install the 4G mini PCIe card in the connector: 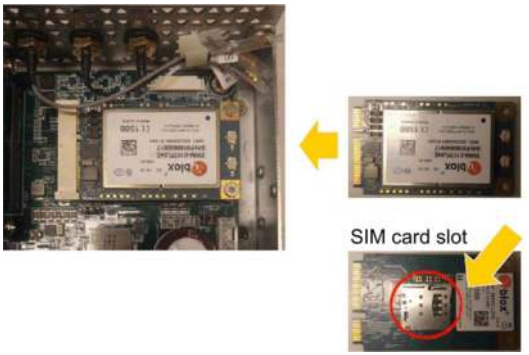
3	Put ring into the cable and the SMA cable into the bracket: **1** Ring

Step	Action
4	Put washer into the SMA connector and the combination nut: **1** Washer
5	Tear down optional interface bracket: 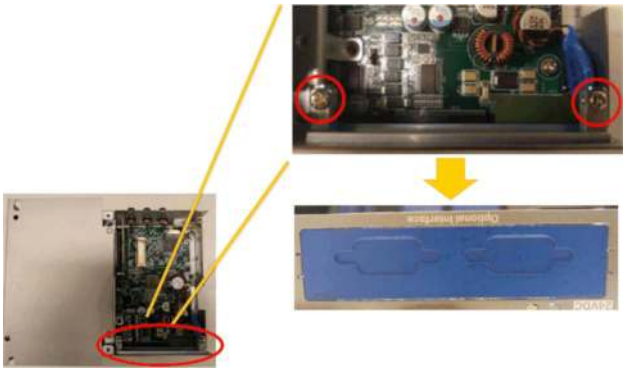
6	Release screws. Combination 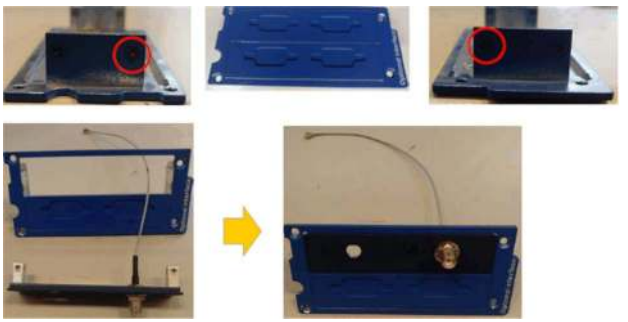

Step	Action
7	Install antenna interface bracket and connect the cable: 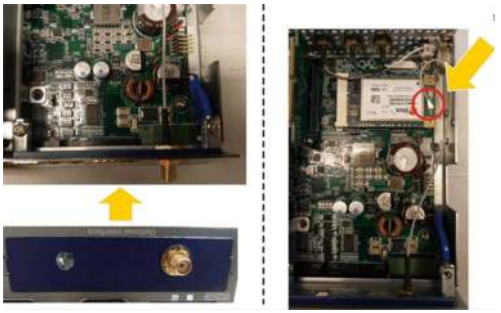 **NOTE:** When using a mini PCIe card with an external cable attached, install a clamp or other device to secure the cable.
8	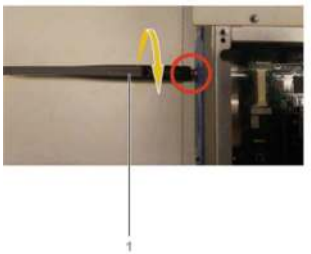 **1** Antenna

The table describes how to install an 4G cellular with a pre-install SMA cable of the Box iPC Universal/Performance:

Step	Action
1	Release the screw: 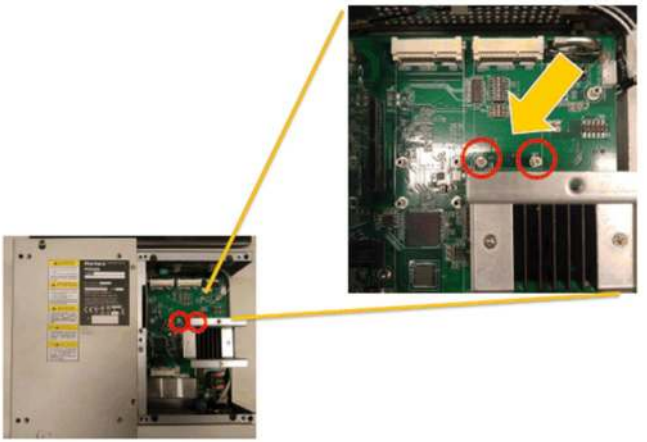
2	Install the 4G mini PCIe card in the connector: 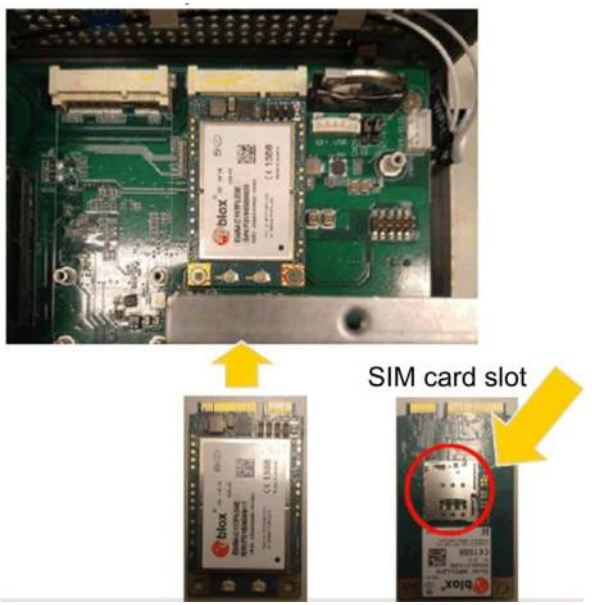

Step	Action
3	Connect pre-install SMA cable: GPRS/ANT1: supports both Tx and Rx, providing the main antenna interface.

The table describes how to install an 4G cellular with a pre-install SMA cable of the Box iPC Optimized:

Step	Action
1	Release the screw: 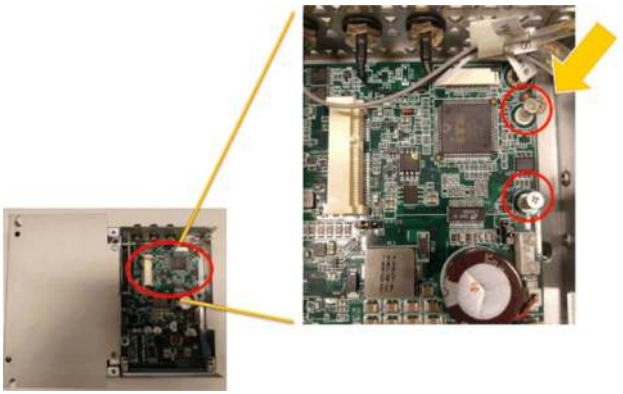

Step	Action
2	Install the 4G mini PCIe card in the connector: 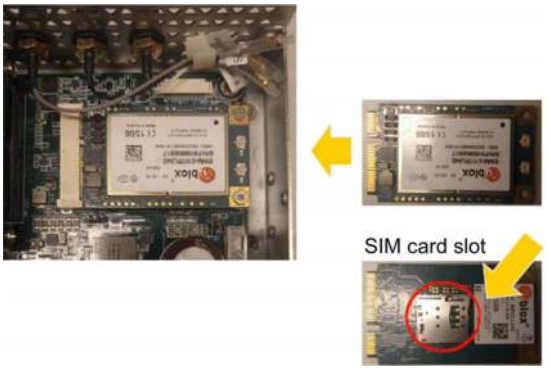
3	Connect pre-install SMA cable: 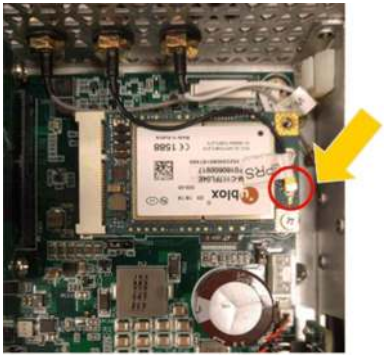 GPRS/ANT1: supports both Tx and Rx, providing the main antenna interface.

Device Manager and Hardware Installation

Install the 4G cellular into the Box iPC first, then install the driver. The driver installation media is included in the recovery media (USB key). After the 4G cellular is installed, you can verify whether it is properly installed on your system through the **Device Manager**.

4G Module Driver Installation

Step	Action
1	Install the driver: Double-click **Schneider 4G** to execute 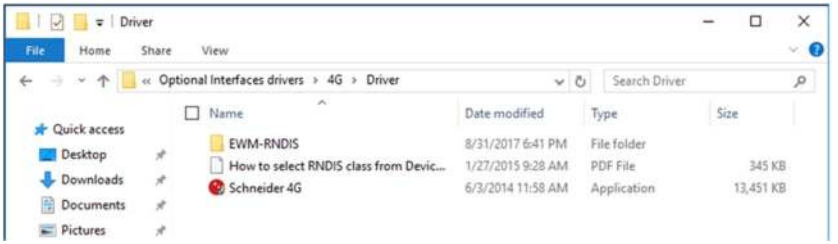
2	Install RNDIS: ● The 4G module needs to be in RNDIS mode and the 4G module driver default setting is RNDIS mode. ● If your operating system does not have a RNDIS driver, double-click **Install** in EWM-RNDIS to execute. 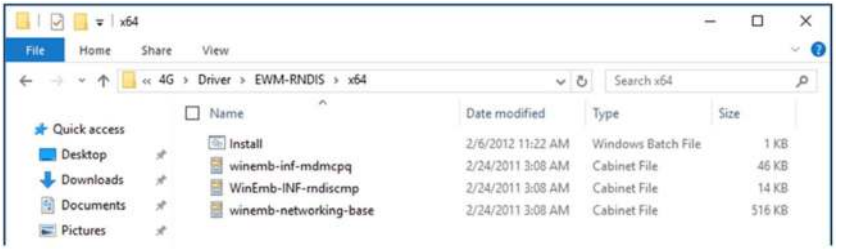 **NOTE:** For more details, refer to How to select RNDIS class from Device Management. 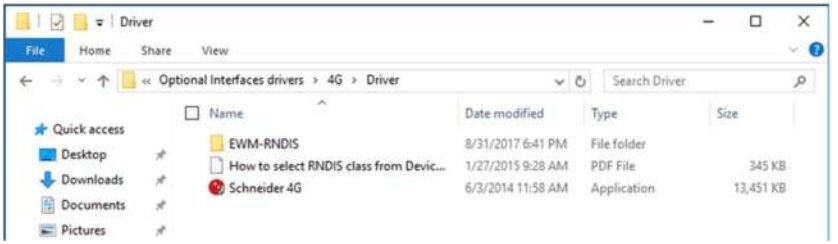

Step	Action
3	After the driver is installed, check the connection with **m-connect**. Execute **m-connect**. 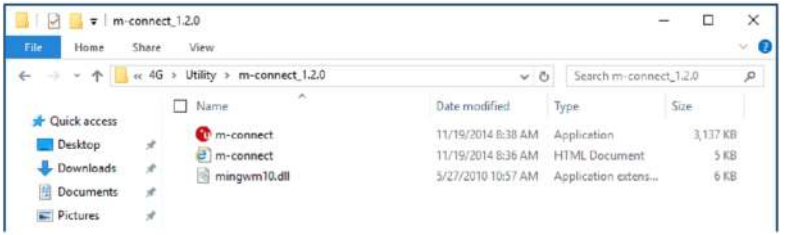
4	**Result**: **m-connect** window opens. The user needs to reenter the PIN code once system power off and on again if SIM card has PIN code protection. Enter the SIM card PIN Code: 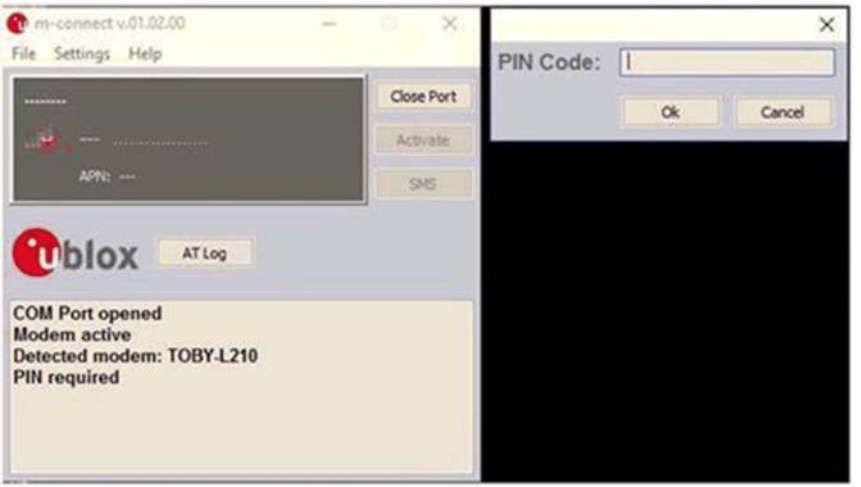 **NOTE:** Not all SIM cards need PIN code protection, depends on the carrier.

Step	Action
5	**Result**: **m-connect** window opens. Follow the steps: 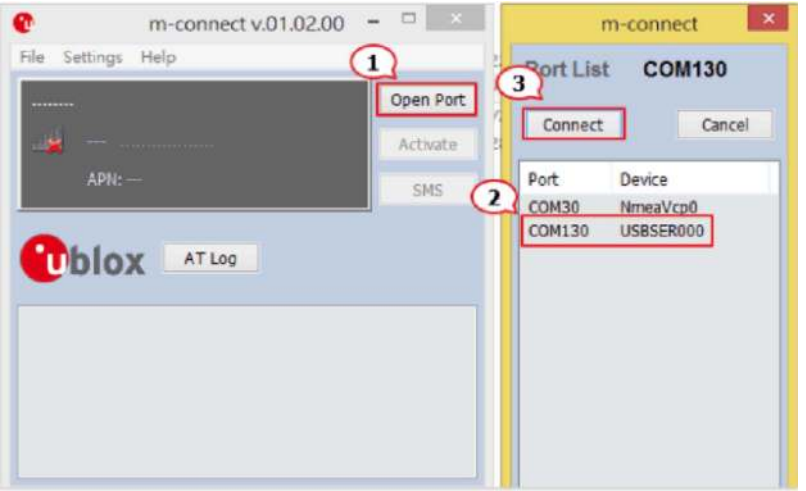
6	Follow the instructions on the screen. 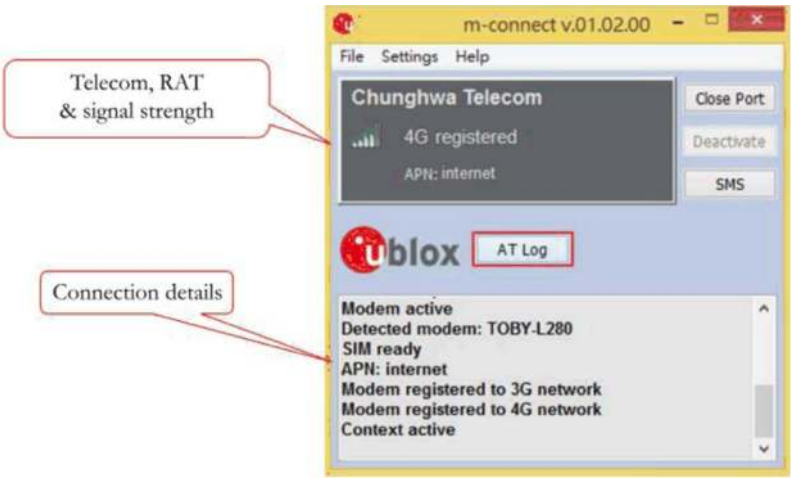 **Result**: **m-connect** window refreshes displaying the connection details.

Step	Action
7	Click **Settings** → **Set Connection Parameters**. **NOTE:** If you use 3G SIM card or in the 3G network, press **Activate** button to active network. **Result**: **m-connect** with APN settings dialog box appears. 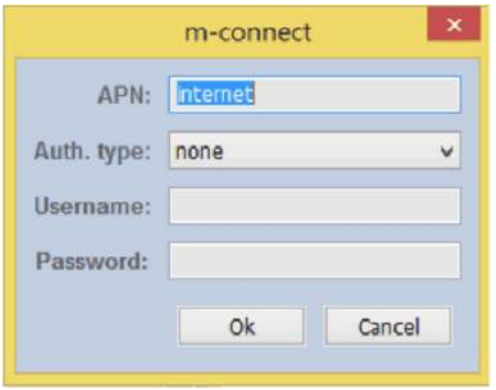
8	Enter the settings. **Result**: **APN** setting needs to be confirmed with a telecom operator.

Step	Action
9	Click **Settings** → **Select RAT**. 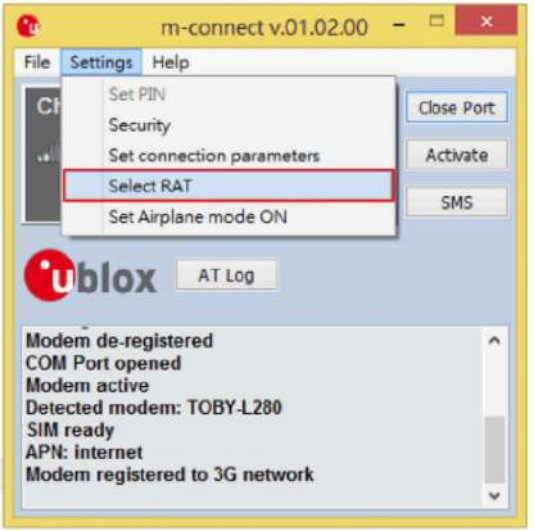 **Result**: **m-connect** with RAT mode settings dialog box appears. 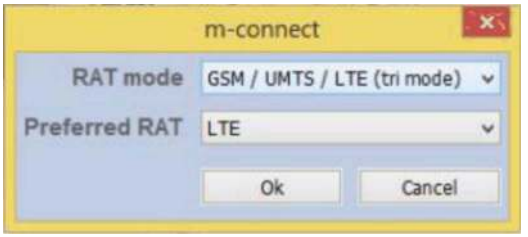 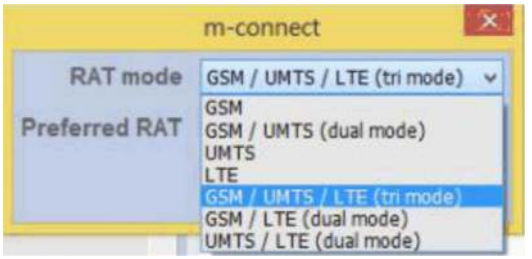
10	Select the RAT mode ((2G/3G/4G) that you want to connect and set the priority

Step	Action
11	Click **AT Log** to check the AT log information.

Cyber Security TPM Module Description

Introduction

The HMIYMINATPM201 is categorized as industrial module. It is compatible with the low pin count module. The Trusted Platform Module (TPM) is an international standard for a secure cryptoprocessor, which is a dedicated microcontroller designed to secure hardware by integrating cryptographic keys into devices.

The mother boards and the BIOS of Harmony Box iPC allows you to install the TPM module and activate encryption with the Windows BitLocker. Then, storage drives and operating system are encrypted according to password and keys managed within the hardware module.

According to part number, the HMIYMINATPM201 TPM module can default mounted following the CTO (configured to order) or can be user mounted afterward as an optional accessory module. The encryption can be activated with Windows BitLocker.

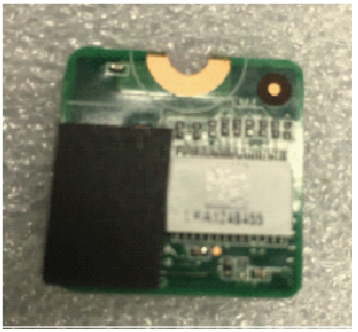

Plug the module onto the Box iPC pin header.

Module Compatibility Table

Part number	Description	HMIBMU/HMIBMP	HMIBMI/HMIBMO
HMIYMINATPM201	TPM 2.0 module	Yes(1)	Yes
NOTE: (1) Need to downgrade to TPM 1.2 module.			

Module View

Box iPC Optimized:

Box iPC Universal/Box iPC Performance:

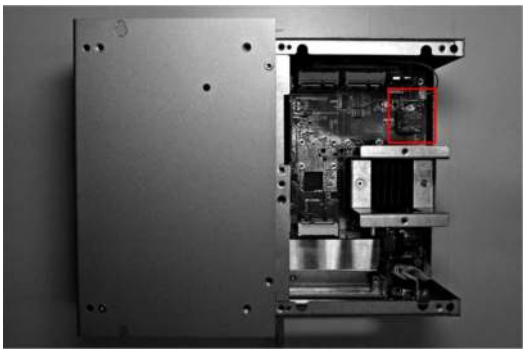

Module Installation

Before installing or removing a mini PCIe card, shut down Windows operating system in an orderly fashion and remove the power from the device.

NOTICE

ELECTROSTATIC DISCHARGE

Take the necessary protective measures against electrostatic discharge before attempting to remove the Harmony Industrial PC cover.

Failure to follow these instructions can result in equipment damage.

⚠ CAUTION

OVERTORQUE AND LOOSE HARDWARE

- Do not exert more than 0.5 Nm (4.5 lb-in) of torque when tightening the installation fastener, enclosure, accessory, or terminal block screws. Tightening the screws with excessive force can damage the installation fastener.
- When fastening or removing screws, ensure that they do not fall inside the Harmony Industrial PC chassis.

Failure to follow these instructions can result in injury or equipment damage.

NOTE: Remove the power before attempting this procedure.

The table describes how to install a TPM module of the Box iPC Optimized:

Step	Action
1	Install TPM card: 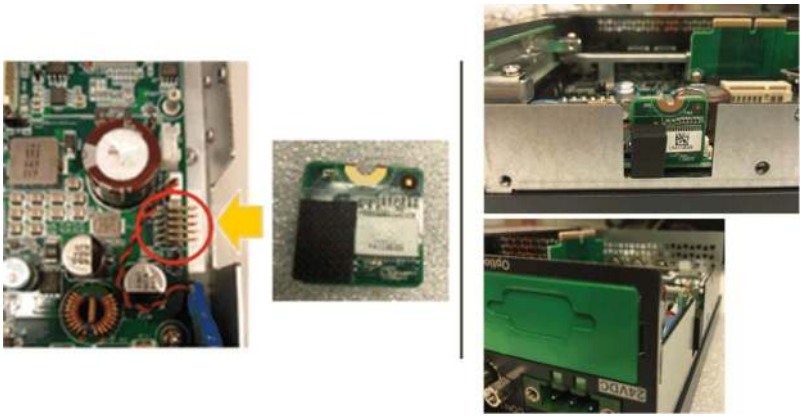

The table describes how to install a TPM module of the Box iPC Universal/Performance:

Step	Action
1	Release the screw: 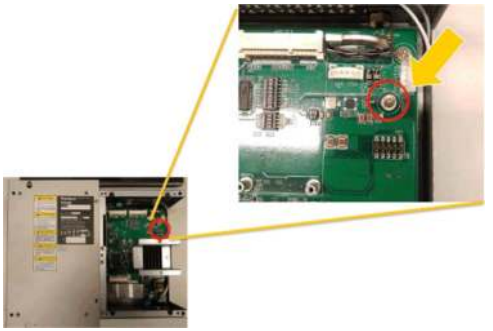

Step	Action
2	Install the TPM card: Lock the screw: 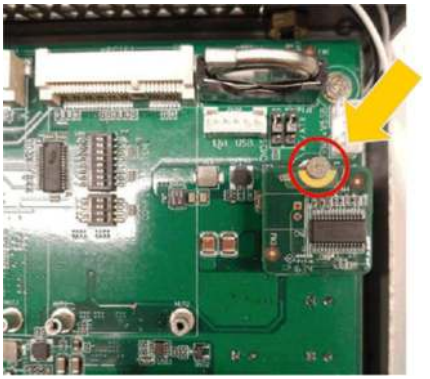

TPM Module Compatibility Table

	TPM 1.2	TPM 2.0
BIOS support	Legacy or UEFI	UEFI
BitLocker support	Yes	Yes

NOTE: TPM module is TPM 2.0 FW as default. It needs to downgrade to TPM 1.2 FW for HMIBMU/HMIBMP.

Model	Default BIOS	TPM 1.2	TPM 2.0
HMIBMU/HMIBMP	Legacy	Support (need to downgrade TPM to 1.2)	Not support
HMIBMI/HMIBMO	UEFI	Support	Support

BitLocker Function

The BitLocker is a full disk encryption feature in Windows. It is designed to protect data by providing encryption for entire volumes. All the OS defaults have this function but for WES7, if `System Reserved` partition is combined with partition C:\, the BitLocker cannot be used to protect fixed drive.

TPM Owner Password Setting

NOTE: A keyboard is required to enter the **BitLocker** PIN during Box startup. The touch screen function is disabled during this step.

Step	Action
1	Open **Control Panel** → **BitLocker Drive Encryption**.
2	Click **TPM Administration** to **Change Owner Password**. 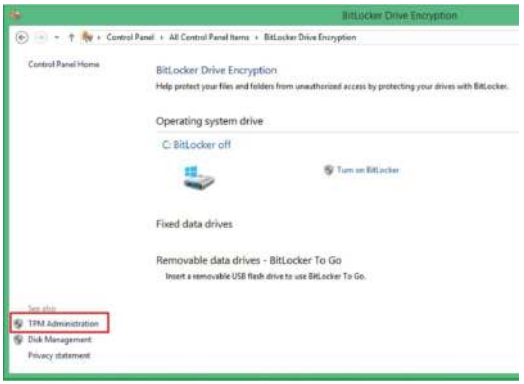

Step	Action
3	Select **Change Owner Password**.

Step	Action
4	Choose either **Automatically create the password** or **Manually create the password**. 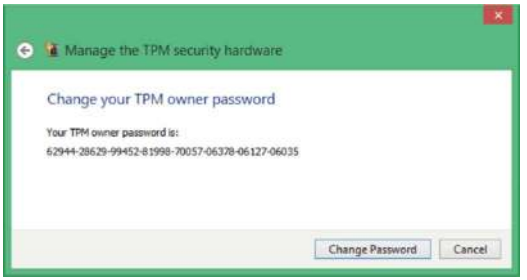 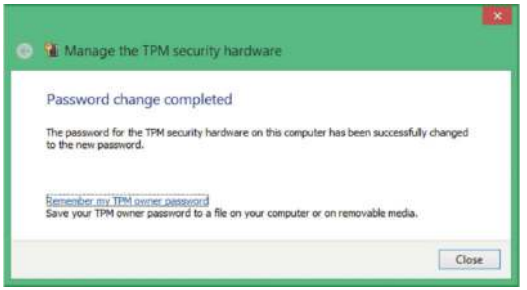

NOTE: If you enter the wrong password more than 30 times, the TPM gets locked.

About the TPM Owner Password

Starting with Windows® 10, version 1607, Windows does not retain the TPM owner password when provisioning the TPM. The password is set to a random high entropy value and then discarded.

Turn On BitLocker Setting

NOTE: A keyboard is required to enter the **BitLocker** PIN during Box startup. The touch screen function is disabled during this step.

Step	Action
1	Open **Control Panel** → **BitLocker Drive Encryption**.
2	Click **Turn on BitLocker**.
3	Choose either **Enter a PIN** or **Insert a USB flash drive** or **Let BitLocker automatically unlock my drive**. **NOTE:** The keyboard is required to enter BitLocker PIN during Box startup. The tactile function is disabled during this step.

Step	Action
4	Enter a **PIN**.
5	Select any one of **Save to your Microsoft account** or **Save to a file** or **Print the recovery key**.
6	Select either **Encrypt used disk space only** or **Encrypt entire drive**.

Step	Action
7	Click the check box of **Run BitLocker system check** and select **Continue**.
8	The figure shows the process of the Encryption. Encryption is completed.

Turn Off BitLocker Setting

Step	Action
1	Open **Control Panel** → **BitLocker Drive Encryption**.
2	Click **Turn off BitLocker**.

TPM Module Downgrade

The TPM module is TPM 2.0 firmware as default. It needs to downgrade to TPM 1.2 firmware for HMIPCCU2B/HMIPCCP2B series.

Follow this TPM downgrade procedure to do downgrade TPM 1.2 firmware:

Step	Action
1	Disable TPM in BIOS: 1. Go to **Advanced → Trusted Computing**. 2. Disable **Security Device Support**.
2	Start the recovery USB memory key: 1. Boot up from the recovery USB memory key. 2. Click **Cancel** to leave the recovery process. Start the TPM downgrade tool. Type **Alt + T** to start the TPM downgrade tool:

Step	Action
3	Click **Yes** to start the downgrade process 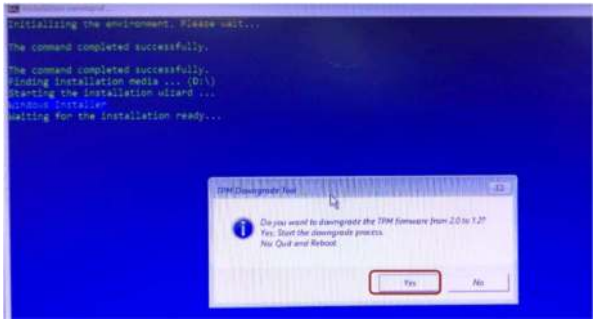
4	Downgrade process starts. After the process is finished, press **Enter** to continue: 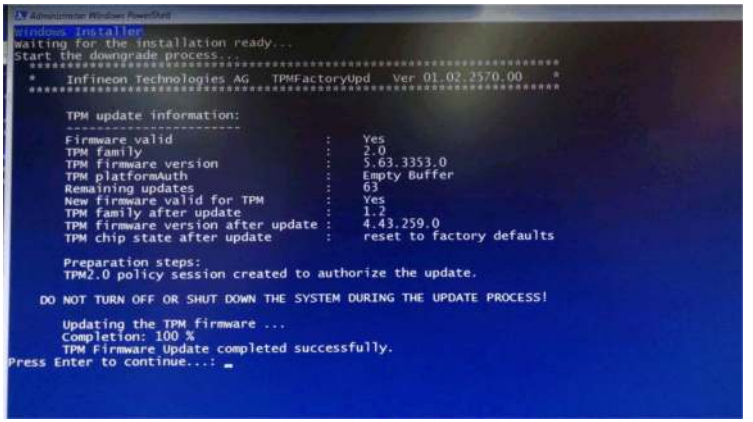
5	Click **OK** to reboot:

Step	Action
6	Enable TPM in BIOS: 1. Go to **Advanced → Trusted Computing**. 2. Enable **Security Device Support**. 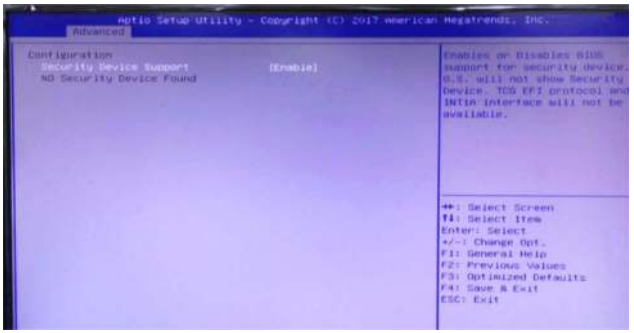
7	Check the TPM version in Windows: ● Go to **Control Panel → BitLocker Drive Encryption → TPM Administrator**. ● Check the TPM version is 1.2. 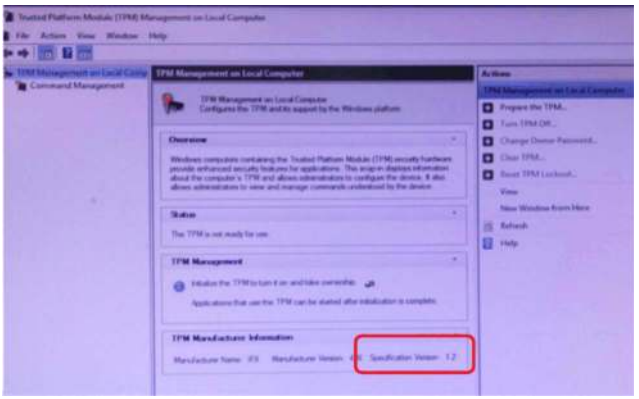

Instruction on How to Update the TPM 1.2 Firmware for Windows® 7

To run TPM firmware update in wizard mode with graphical user interface, launch the executable `IFXTPMUpdate_TPM12_r0103.exe` without any parameters. In this case the wizard guides you through the following steps:

Step	Action
1	Select the check box to accept the license agreement. 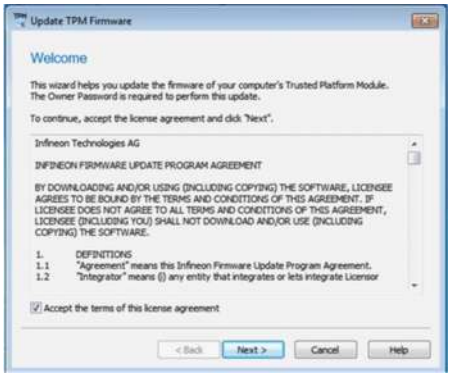
2	Install TPM recovery driver if necessary. **NOTE:** Installation may require a restart of your computer.
3	Check platform details. 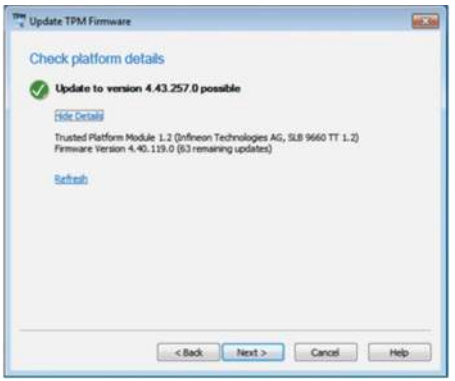

Step	Action
4	Enter the **Owner Password** or the **Owner Password Backup File** if the **Owner Password** is not managed by the operating system. Do the following steps: ● Select **I have the Owner Password Backup File**. ● Select `*.tpm` file. 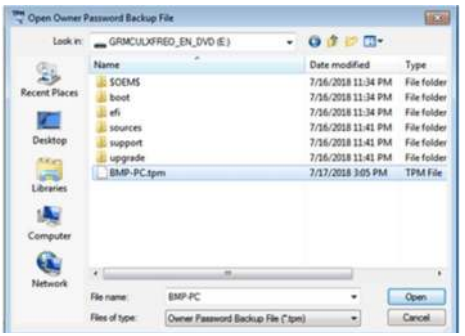 ● Select **Next**. 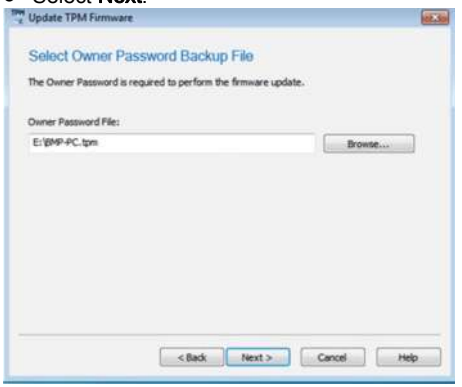

Step	Action
5	Perform the update as shown below: 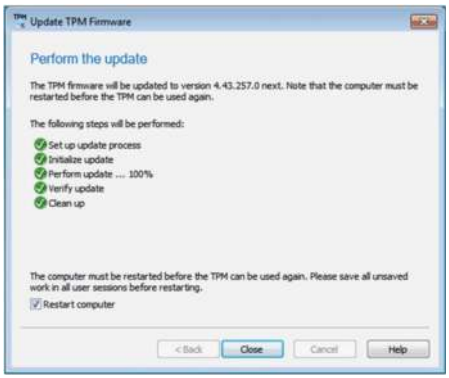
6	Restart your computer. **NOTE:** Save all unsaved work in all user sessions before restarting in order to ensure prevention of data loss.

Clearing and reinitializing the TPM after the update is recommended for the updated paths included in this version of Infineon TPM firmware Update. For more information, see Microsoft Security Advisory ADV170012 or visit *www.infineon.com/tpm-update*.

Clearing the TPM resets it to factory defaults. You lose all created keys and data protected by those keys.

Instruction on How to Update the TPM 1.2 Firmware for Windows® 8.1

To run TPM firmware update in wizard mode with graphical user interface, launch the executable `IFXTPMUpdate_TPM12_r0103.exe` without any parameters. In this case the wizard guides you through the following steps:

Step	Action
1	Select the check box to accept the license agreement.
2	Install TPM recovery driver if necessary. **NOTE:** Installation may require a restart of your computer.
3	Check platform details 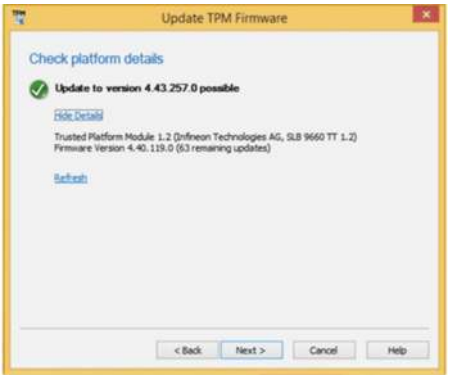

Step	Action
4	Perform the update as shown below: 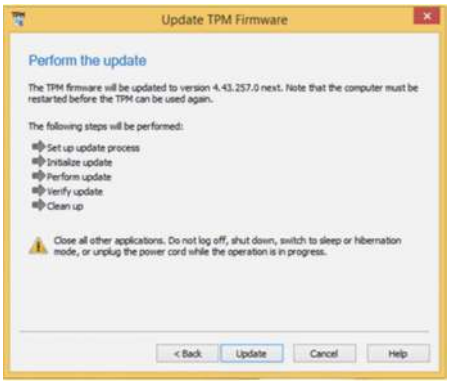
5	Restart your computer. **NOTE:** Save all unsaved work in all user sessions before restarting in order to ensure prevention of data loss.

Clearing and reinitializing the TPM after the update is recommended for the updated paths included in this version of Infineon TPM firmware Update. For more information, see Microsoft Security Advisory ADV170012 or visit *www.infineon.com/tpm-update*.

Clearing the TPM resets it to factory defaults. You lose all created keys and data protected by those keys.

TPM 1.2 Firmware Update for Windows® 10

If ownership of the TPM was taken with Windows® 10 Version 1607 or later then by default the owner authorization is no longer stored on the local system. Refer to the *Microsoft article* for more information. To update the firmware, you need to clear the TPM and take ownership again with modified Windows setting. Then the owner authorization is stored on the local system.

Clearing and reinitializing the TPM after the update is recommended for the updated paths included in this version of Infineon TPM firmware Update. For more information, see Microsoft Security Advisory ADV170012 or visit *www.infineon.com/tpm-update*.

Clearing the TPM resets it to factory defaults. You lose all created keys and data protected by those keys.

Follow this procedure to update the TPM 1.2 firmware for Windows® 10:

Step	Action
1	Set registry key `HKLM\Software\Policies\Microsoft\TPM` [REG_DWORD] `OSManagedAuthLevel` to **4**. ● Select **Run** then type the text regedit as shown below: 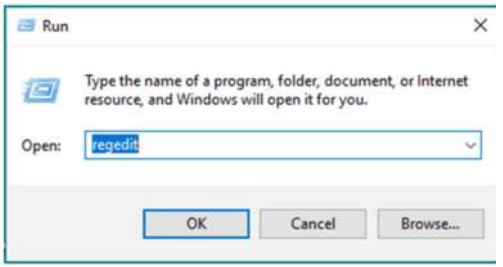 Click **OK** ● Change the Value date to 4 for `OSManagedAuthLevel` . 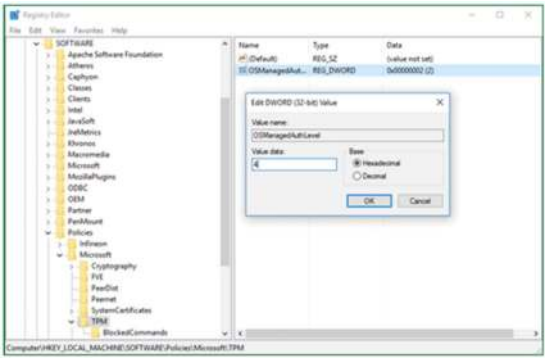 Click **OK**

Step	Action
2	Start `tpm.msc` and click **Clear TPM....** 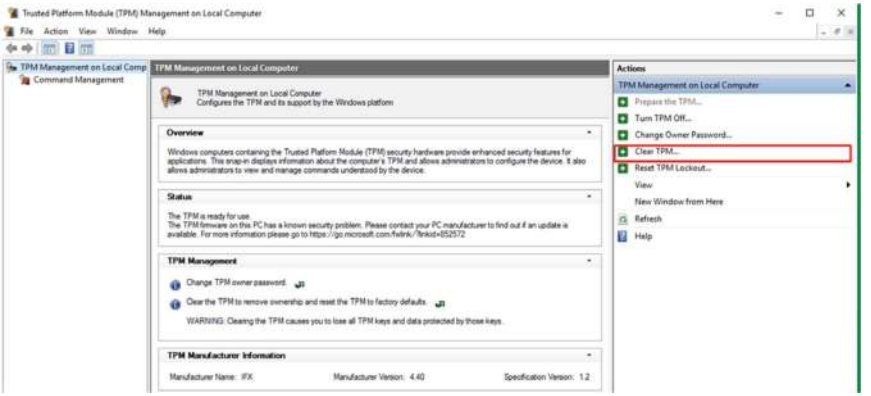
3	Restart the computer. **NOTE:** Save all unsaved work in all user sessions before restart the computer in order to ensure prevention of data loss.
4	Start `tpm.msc` and click **Prepare the TPM....** 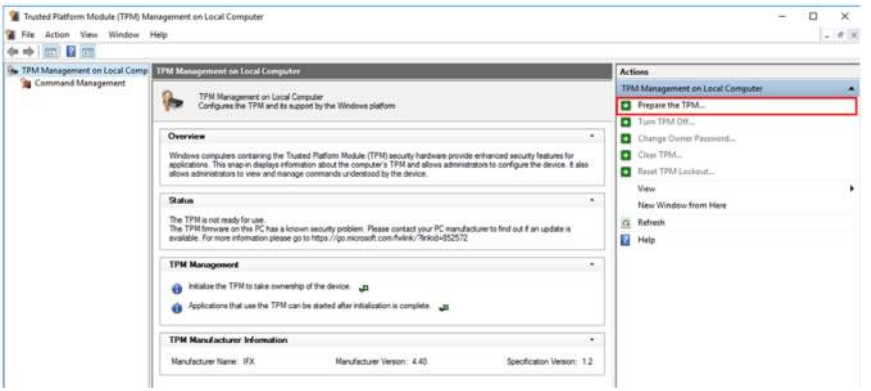

Step	Action
5	Wait for Windows to reprepare the TPM (Windows stores owner authorization on local system). When the preparation is completed, status field in tpm.msc displays **The TPM is ready**. 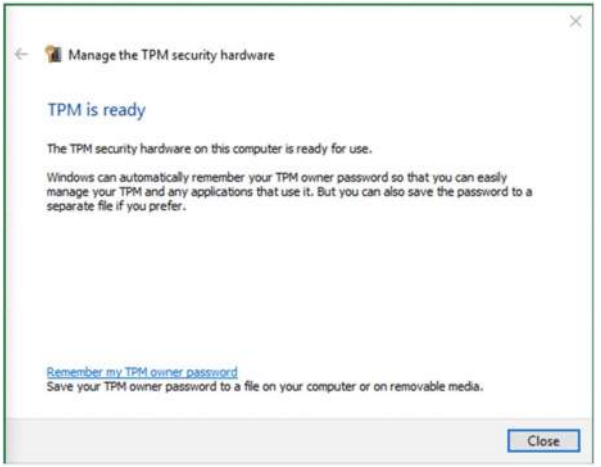

Step	Action
6	Run the TPM firmware update tool to update the firmware of the TPM as shown below: 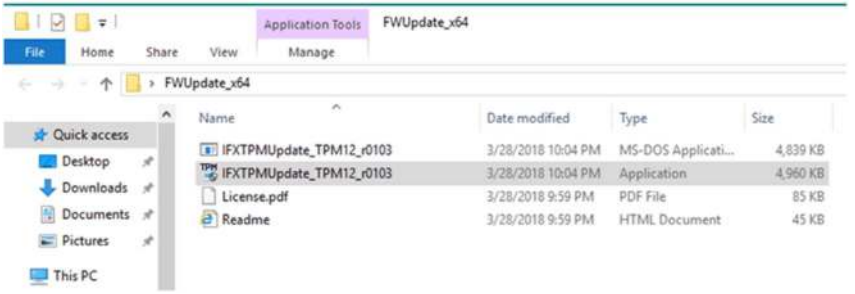 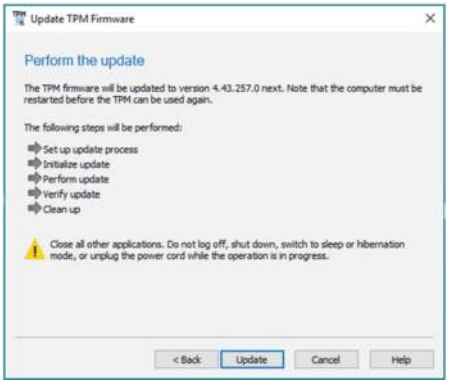 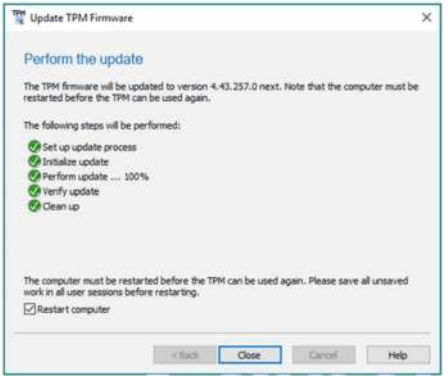

Step	Action
7	Restart the computer. **NOTE:** Save all unsaved work in all user sessions before restart the computer in order to ensure prevention of data loss.
8	Restore registry key `HKLM\Software\Policies\Microsoft\TPM` [REG_DWORD] `OSManagedAuthLevel` to its previous Value data **2**. 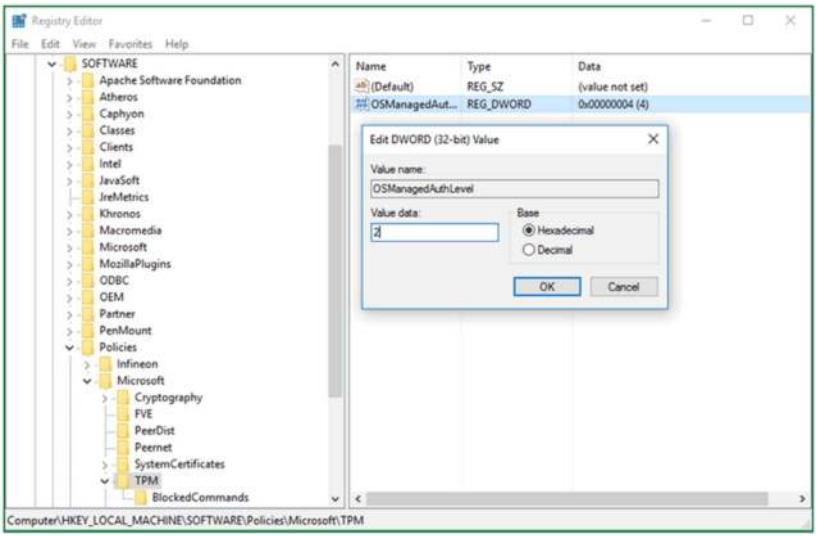 Click **OK**
9	Start `tpm.msc` and click on **Clear TPM....** 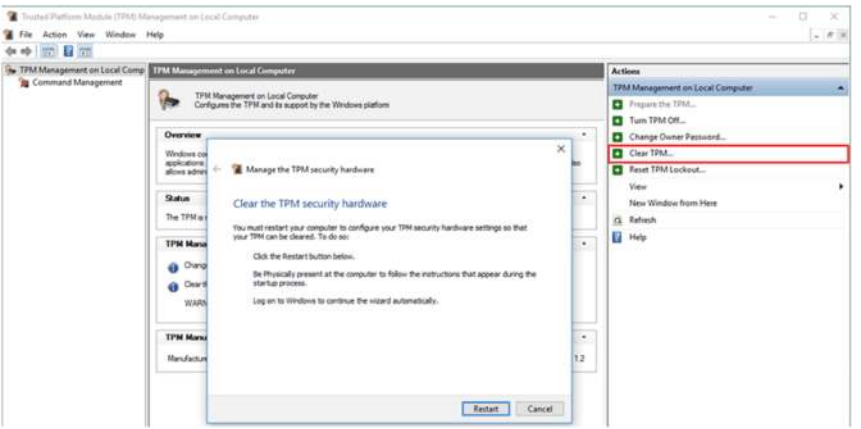

Step	Action
10	Restart the computer. **NOTE:** Save all unsaved work in all user sessions before restart the computer in order to ensure prevention of data loss.
11	Start `tpm.msc` and click **Prepare the TPM....** 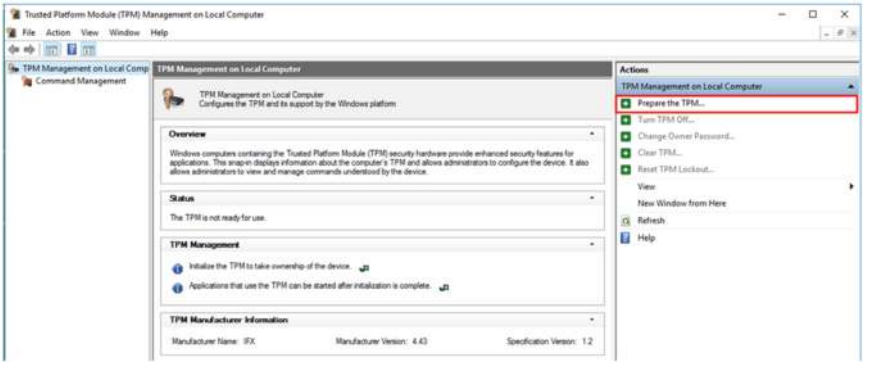
12	Wait for Windows to reprepare the TPM (using Windows® 10 security measures). When the preparation is completed, in status field tpm.msc displays **The TPM is ready for use**. 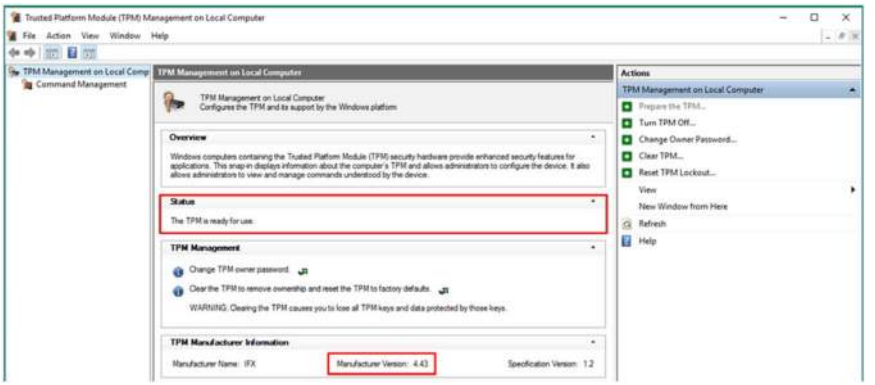 Check the Manufacturer Version is 4.43.

Chapter 9
Configuration of the Boot

What Is in This Chapter?

This chapter contains the following sections:

Section	Topic	Page
9.1	BIOS and UEFI General Information	352
9.2	BIOS Box iPC Universal and Box iPC Performance (HMIBMU/HMIBMP)	356
9.3	UEFI Box iPC Optimized (HMIBMI/HMIBMO)	363

Section 9.1
BIOS and UEFI General Information

Overview

This section describes the general information of the BIOS and BIOS with UEFI type (unified extensible firmware interface):

- **Main** tab
- **Security** menu
- **Save & Exit** menu

What Is in This Section?

This section contains the following topics:

Topic	Page
BIOS and UEFI **Main** Menu	353
BIOS and UEFI **Security** Menu	354
BIOS and UEFI **Save & Exit** Menu	355

BIOS and UEFI Main Menu

General Information

BIOS stands for **Basic Input Output System**.

The **BIOS Setup Utility** lets you modify basic system configuration settings.

NOTE: To enter BIOS setup, press **DEL** key during startup.

Main Tab

When you press the [DEL] key during startup, the **Main** BIOS setup menu appears.

This screen, like all the BIOS screens, is divided into three frames:

- Left: This frame displays the options available on the screen.
- Upper right: This frame gives a description of the user selected option.
- Lower right: This frame displays how to move to other screens and the screen edit commands.

This table shows the **Main** menu options that can be set by the user:

BIOS setting	Description
System Time	This is the current time setting. The time must be entered in HH:MM:SS format. The time is maintained by the battery (CMOS battery) when the unit is turned off.
System Date	This is the current date setting. The date must be entered in MM/DD/YY format. The date is maintained by the battery (CMOS battery) when the unit is turned off.

NOTE: The grayed-out options on all BIOS screens cannot be configured. The blue options can be configured by the user.

BIOS and UEFI Security Menu

Security Setup

Select **Security Setup** from the main BIOS setup menu. All **Security Setup** options, such as password protection, are described in this section. To access the submenu for the following items, select the item and press **Enter**.

To change the administrator or user password, select the **Administrator / User Password** option, press **Enter** to access the submenu, and then type the password.

Account and Authority Management

⚠ WARNING

UNAUTHORIZED DATA ACCESS

- Immediately change any default passwords to new and secure passwords.
- Do not distribute passwords to unauthorized or unqualified personnel.
- Limit access rights to users essential to your application needs only.

Failure to follow these instructions can result in death, serious injury, or equipment damage.

Username	Password
admin	ipc1234

NOTE: Above are the current default settings; it is recommended to modify the default password immediately.

BIOS and UEFI Save & Exit Menu

Menu

BIOS setting	Description
Save Changes and Exit	When the system configuration is complete, select this option to save changes, exiting the BIOS setup and, if necessary, reboot the computer to take into account all system configuration parameters.
Discard Changes and Exit	Select this option to quit setup without making any permanent changes to the system configuration.
Save Changes and Reset	Selecting this option displays a confirmation message box. On confirming, you save changes to the BIOS settings, save the settings to CMOS, and restart the system.
Discard Changes and Reset	Select this option to quit BIOS setup without making any permanent changes to the system configuration and reboot the computer.
Save Changes	Select this option to save the system configuration changes without exiting the BIOS setup menu.
Discard Changes	Select this option to discard any current changes and load previous system configuration.
Restore Defaults	Select this option to configure automatically all BIOS setup items to the optimal default settings. The optimal defaults are designed for maximum system performance, but may not work best for all computer applications. Do not use the optimal defaults if the user's computer is experiencing system configuration problems.
Save User Defaults	When the system configuration is complete, select this option to save changes as the user defaults without exit BIOS setup menu.
Restore User Defaults	Select this option to restore the user defaults.

Section 9.2
BIOS Box iPC Universal and Box iPC Performance (HMIBMU/HMIBMP)

Overview

This section describes the BIOS.

What Is in This Section?

This section contains the following topics:

Topic	Page
BIOS **Advanced** Menu	357
BIOS **Chipset** Menu	360
BIOS **Boot** Menu	362

BIOS Advanced Menu

Advanced BIOS Features Tab

For details about the Advanced submenus, refer to:

- Front Reset Control Menu
- Trusted Computing
- CPU Configuration
- SATA Configuration
- USB Configuration
- IT8768 Super I/O Configuration
- iManager Configuration
- AMI Graphic Output Protocol Policy

Front Reset Control Menu

BIOS setting	Description
Front Reset Control	Enables or disables front reset button.

NOTE: This menu only shows when HMIBMP/HMIBMU bundled with display module.

Trusted Computing Menu

BIOS setting	Description
Security Device Support	Enables or disables BIOS support for security device.
TPM State	Enables or disables security device.
Pending Operation	Schedule an operation for the security device.

CPU Configuration Menu

BIOS setting	Description
Hyper-threading	Enables or disables the Intel hyper threading technology.
Execute Disable Bit	Enables or disables the no-execution page protection.
Intel Virtualization Technology	Enables or disables Intel virtualization technology. When enabled, a VMM can utilize the additional hardware capabilities provided by Vanderpool technology.
EIST	Enables or disables Intel SpeedStep.
Turbo Mode	Enables or disables CPU Turbo Mode.
Energy Performance	Select CPU performance or power savings Mode.
CPU C states	Enables or disables CPU C states.

NOTE: **Hyper-threading** and **Turbo Mode** and **Energy Performance** only show on HMIBMP.

SATA Configuration Menu

BIOS setting	Description
SATA Controller(s)	Enables or disables SATA devices.
SATA Mode Selection	Select SATA mode selection. (Determines how SATA controllers operate).
SATA Controller Speed	Indicates the maximum speed the SATA controller can support.
CFast	CFast: Enables or disables serial ATA port. Hot plug: Designates this port as hot pluggable.
mSATA	mSATA: Enables or disables serial ATA port. Hot plug: Designates this port as hot pluggable.
HDD1	HDD1: Enables or disables serial ATA port. Hot plug: Designates this port as hot pluggable.
HDD2	HDD2: Enables or disables serial ATA port. Hot plug: Designates this port as hot pluggable.

USB Configuration Menu

BIOS setting	Description
USB Mass Storage Driver Support	Enables or disables USB mass storage driver support.
Port 60/64 Emulation	Enable I/O port 60h/64h emulation support. This should be enabled for the complete USB keyboard legacy support for non-USB aware OS.
USB transfer time-out	Select time-out section. The time-out value for control, bulk, and interrupt transfers.
Device reset time-out	Select device time-out section. USB mass storage devices start unit command time-out.
Device power-up delay	Select device power-up section. Maximum time the device takes before it properly reports itself to the host controller. **Auto** uses a default value: for a root port it is 100 ms, for a hub port the delay is taken from the hub descriptor.

IT8768 Super IO Configuration Menu

BIOS setting	Description
Serial Port 1 Configuration	This item allows user to set parameters of COM port 1.
Serial Port	Enable or disable serial port (COM).
Chang Setting	Select address and IRQ settings for super IO device.

iManager Configuration Menu

BIOS setting	Description
CPU Shutdown Temperature	Select CPU shutdown temperature.
iManager WatchDog IRQ	Select iManager IRQ number eBrain watchdog.
Hardware Monitor	Monitor hardware status.

AMI Graphic Output Protocol Policy Menu

BIOS setting	Description
BIST Enable	Enable or disable the BIST on the integrated display panel.

BIOS Chipset Menu

Chipset BIOS Features Tab

For details about the **Chipset** submenus, refer to:

- PCH-IO configuration
- System agent (SA) Configuration

PCH-IO Configuration Menu

BIOS setting	Description
PCI Express Configuration	Change mini PCIe configuration settings.
USB Configuration	Change USB configuration settings.
PCH Azalia Configuration	Azalia (Intel High Definition Audio)
Restore AC Power Loss	Select AC power state when power is reapplied after a power outage.

PCI Express Configuration Submenu

BIOS setting	Description
mPCIe1	Change mini PCIe root settings: ● **mPCIe1** ● **Hot Plug** ● **PCIe Speed**
mPCIe2	Change mini PCIe root settings: ● **mPCIe1** ● **Hot Plug** ● **PCIe Speed**
PCIex1	Change mini PCIe root settings: ● **mPCIe1** ● **Hot Plug** ● **PCIe Speed**
PCIex4	Change mini PCIe root settings: ● **mPCIe1** ● **Hot Plug** ● **PCIe Speed**

USB Configuration Submenu

BIOS setting	Description
USB Precondition	Enables or disables USB Precondition. Precondition work on USB host controller and root ports for faster enumeration.
XHCI Mode	Select mode of operation of XHCI mode.
USB Ports Per-Port Control	Enables or disables each of the USB port.
Front Panel USB Control	Enables or disables SMSC HUB port.

PCH Azalia Configuration Menu

BIOS setting	Description
Azalia	Control detection of the Azalia device.

Restore AC Power Loss Menu

BIOS setting	Description
Restore AC Power Loss	Select AC Power state when power is reapplied after a power failure.

System Agent (SA) Configuration Menu

BIOS setting	Description
Graphics Configuration	Change graphics setting.
Memory Configuration	Memory configuration parameters.

Graphics Configuration Submenu

BIOS setting	Description
Graphics Turbo IMON Current	Shows graphics turbo IMON current values supported (14-31).
Primary Display	Select which of the IGFX/PEG/PCI graphics device should be the primary display or select the SG for switchable Gfx.

BIOS Boot Menu

Boot Settings Configuration Menu

Boot setting	Description
Setup Prompt Timeout	Select the number of seconds to wait for setup activation key.
Bootup NumLock state	Select the keyboard **NumLock** state.
Quiet Boot	Enables or disables **Quiet Boot** option.
Fast Boot	Enables or disables boot with initialization of a minimal set of devices required to launch active boot option. It has no effect for BBS boot options.
Boot Option	Set the system boot order.
Hard Driver BBS Priorities	Set the order of the legacy devices in this group.
CSM parameters	OpROM execution, boot option filter.

CSM Parameters Submenu

Boot setting	Description
Launch CSM	Enables or disables launch CSM.
Boot option filter	Select boot option filter setting.
Launch PXE OpROM policy	Select launch PXE OpROM policy setting.
Launch Storage OpROM policy	Select launch storage OpROM policy setting.
Launch Video OpROM policy	Select launch video OpROM policy setting.
Other PCI device ROM priority	Select other PCI device ROM priority setting.

Section 9.3
UEFI Box iPC Optimized (HMIBMI/HMIBMO)

Overview

This section describes the Unified Extensible Firmware Interface (UEFI). The UEFI is a specification that defines a software interface between an operating system and platform firmware. The UEFI replaces the Basic Input/Output System (BIOS) firmware interface originally present in all PC with most UEFI firmware implementations providing legacy support for BIOS services. The UEFI can support remote diagnostics and repair of computers, even with no operating system installed.

What Is in This Section?

This section contains the following topics:

Topic	Page
UEFI **Advanced** Menu	364
UEFI **Chipset** Menu	367
UEFI **Boot** Menu	369

UEFI Advanced Menu

Advanced Features Tab

For details about the Advanced submenus, refer to:

- Front Reset Control Menu
- Trusted Computing
- ACPI Settings
- IT8768E Super I/O Configuration
- Embedded Controller Configuration
- CPU Configuration
- AMI Graphic Output Protocol Policy
- SDIO Configuration
- USB Configuration

Front Reset Control Menu

BIOS setting	Description
Front Reset Control	Enables or disables front reset button.

NOTE: This menu only shows when HMIBMI/HMIBMO bundled with display module.

Trusted Computing Menu

BIOS setting	Description
Security Device Support	Enables or disables security device.
TPM Device	Select TPM device.
Pending Operation	Schedule an operation for the security device.
Device Select	TPM1.2 or TPM2.0 or AUTO supports both with the default set to TPM2.0 device if not found, TPM1.2 device is enumerated.

ACPI Settings Menu

BIOS setting	Description
Enable ACPI Auto Configuration	Enables or disables BIOS ACPI Auto configuration.
Enable Hibernation	Enables or disables System ability to Hibernate (OS/S4 Sleep State). This option may be not effective with same OS.
ACPI Sleep State	Select the highest ACPI sleep state the system enters when the **SUSPEND** button is press.
Lock Legacy Resources	Enable or Disables LOCK of Legacy Resources.

IT8768 Super IO Configuration Menu

Box iPC	BIOS setting	Description
HMIBMI/HMIBMO	**Serial Port 1 Configuration**	This item allows user to set parameters of COM port 1.
HMIBMI	**Serial Port**	Enable or disable serial port (COM).
	COM1 Uart mode setting	RS-422/RS-485 mode; RS-232 mode.
HMIBMO	**Serial Port**	Enable or disable serial port (COM).
	COM1 Uart mode setting	RS-232 mode.
	COM2 Uart mode setting	RS-422/RS-485 mode; RS-232 mode.

NOTE: The HMIBMI/HMIBMO have not a switch to set the RS-232, RS-422/485 mode. Use the BIOS for the setting.

Embedded Controller Configuration Menu

BIOS setting	Description
Hardware Monitor	Monitor hardware status.
iManager WatchDog IRQ	Select iManager IRQ number eBrain watchdog.
EC Watch Dog Function	Select watch Dog timer you need.
CPU Shutdown Temperature	Setting CPU shutdown temperature.

CPU Configuration Menu

BIOS setting	Description
Socket 0 CPU Information	Socket-specific CPU information.
CPU Power Management	CPU Power Management options.
Intel Virtualization Technology	Enables or disables Intel virtualization technology. When enabled, a VMM can utilize the additional hardware capabilities provided by Vanderpool technology.
VT-d	Enables or disables CPU VT-d.

CPU Power Management Submenu

BIOS setting	Description
EIST	Enables or disables Intel SpeedStep.
Turbo Mode	Select SATA mode selection. (Determines how SATA controllers operate).
C-States	Enables or disables CPU C states.

AMI Graphic Output Protocol Policy Menu

BIOS setting	Description
Output Select	Select output Interface.

SDIO Configuration

BIOS setting	Description
SDIO Access Mode	**AUTO** option: Access SD device in DMA mode if controller support it, otherwise in PIO mode.
MCC	Mass storage device emulation type.

USB Configuration Menu

BIOS setting	Description
Legacy USB Support	Enables or disables Legacy USB support.
XHCI Hand-off	Select enabled for Operating Systems without XHCI hand-off support. The XHCI ownership replace is claimed by the XHCI driver. The settings are enabled and disabled.
USB Mass Storage Driver Support	Enables or disables USB mass storage driver support.
Port 60/64 Emulation	Enable I/O port 60h/64h emulation support. This is enabled for the complete USB keyboard legacy support for non-USB aware OS.
USB transfer time-out	Select time-out section. The time-out value for control, bulk, and interrupt transfers.
Device reset time-out	Select device time-out section. USB mass storage devices start unit command time-out.
Device power-up delay	Select device power-up section. Maximum time the device takes before it properly reports itself to the host controller. **Auto** uses a default value: for a root port, it is 100 ms, for a hub port the delay is taken from the hub descriptor.

UEFI Chipset Menu

Chipset Features Tab

For details about the **Chipset** submenus, refer to:

- North Bridge
- Uncore Configuration
- South Cluster Configuration
  - PCI Express Configuration
  - SATA Drivers
- Miscellaneous Configuration

North Bridge Menu

BIOS setting	Description
Max TOLUD	Maximum value of TOLUD.

Uncore Configuration Menu

BIOS setting	Description
GOP Driver	Enable GOP Driver unloads VBIOS. Disable GOP Driver loads VBIOS.

South Cluster Configuration Menu

BIOS setting	Description
PCI Express Configuration	PCI Express configuration setting.
SATA Drives	SATA Device configuration Setup option.

PCI Express Configuration Submenu

BIOS setting	Description
mini PCIe	Change mini PCIe root settings: • **mini PCIe**: Control the PCI Express Root Port • **Hot Plug**: Enable or disable PCI Express Hot Plug • **PCIe Speed**: Select PCI Express port speed

SATA Drivers Submenu

BIOS setting	Description
SATA Mode Selection	Select SATA mode selection. (Determines how SATA controllers operate).
SATA Port 0 Hot Plug Capability	Enables or disables SATA port Hot Plug Capability.
SATA Port 1 Hot Plug Capability	Enables or disables SATA port Hot Plug Capability.

USB Configuration Menu

BIOS setting	Description
XHCI Pre-Boot Driver	Enables or disables XHCI (eXtensible Host Controller Interface) Pre-Boot Driver support.
XHCI Mode	Select mode of operation of XHCI mode.
USB Port Disable Override	Enables or disables USB Port from reporting a Device Connection to controller.
XHCI Disable Compliance Mode	Enables or disables XHCI Link Compliance Mode.
USB HW MODE AFE Comparators	Enables or disables USB HW MODE AFE Comparators.
Front Panel USB Control	Enables or disables SMSC USB HW HUB port.

NOTE: Front Panel USB control only for when HMIBMI/HMIBMO bundled with 4:3 12” and 4:3 15” HMIDM.

Miscellaneous Configuration Menu

BIOS setting	Description
Wake On Lan	Enable or disables the wake on Lan.

UEFI Boot Menu

Boot Features Tab

Boot setting	Description
Setup Prompt Timeout	Select the number of seconds to wait for setup activation key.
Bootup NumLock State	Select the keyboard **NumLock** state.
Quiet Boot	Enables or disables **Quiet Boot** option.
Boot Option Priorities	Setting the system boot order.
Fast Boot	Enables or disables boot with initialization of a minimal set of devices required to launch active boot option. It has no effect for BBS (BIOS Boot Specification) boot options.
New Boot Option Policy	Controls the placement of newly detected UEFI (Unified Extensible Firmware Interface) boot options.

Chapter 10
System Monitor

Subject of this Chapter

This chapter describes the System Monitor server and agent of the Box iPC.

What Is in This Chapter?

This chapter contains the following topics:

Topic	Page
System Monitor Interface	372
Device Management - Monitoring Rules	378
Monitor Account Setting	398
Monitor System Setting	401
Installing Node-RED from HMI System Monitor OS SKU	406

System Monitor Interface

Overview

The **System Monitor** 3.0 interface provides remote monitoring, a feature that helps you access multiple clients through a single console for remote device management. The **System Monitor** immediately recognizes equipment and provides real-time equipment maintenance, which improves system stability and reliability.

Remote Monitoring monitors system status of remote devices. The monitored items include hard disk temperature, hard drive health, network connection, CPU temperature, system voltages, system fan status, and UPS status.

Remote Monitoring also provides support for function logs so that managers can regularly check the status of their remote devices.

The **System Monitor** sends notification and makes an entry in the event log.

NOTE: When configuring the **System Monitor**, it is not possible to create a group/device as the virtual keyboard is not accessible from configuration. The workaround consists of plugging in a physical keyboard.

System Monitor Requirements

The table describes the software requirements:

Description	Software
Framework	Microsoft.NET Framework version 3.5 or higher
Driver	Software 4.0 API

System Monitor Console

The **System Monitor** console acts as a server for the clients. Devices that run on the **System Monitor** console display the health and status information from the **System Monitor** clients. The console has to be made available by the clients over a network.

Launch the system tray of **ServerControl** from Windows **Start** → **Programs** and right-click to launch **ServerControl** menu from tray icon:

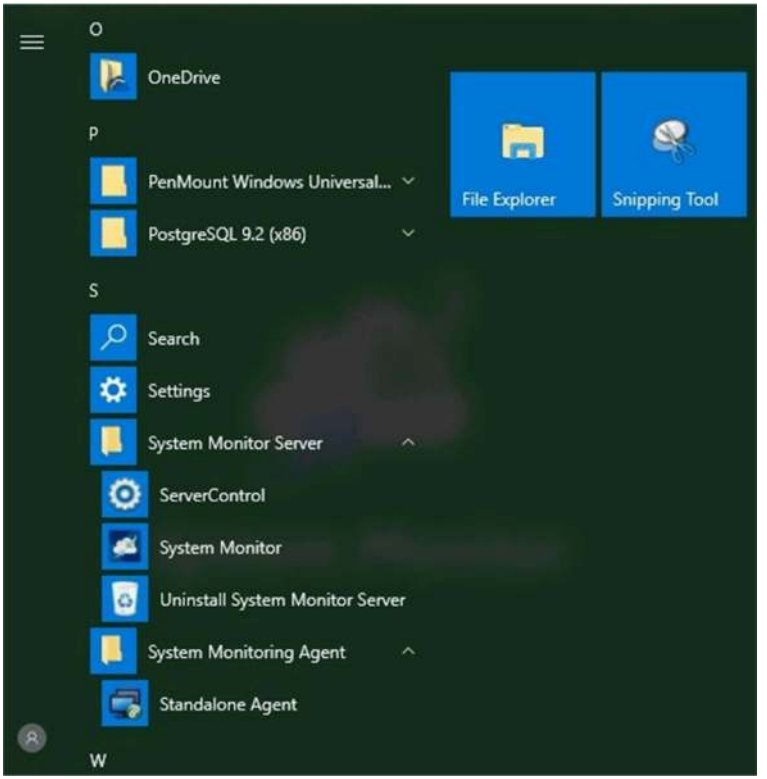

System Monitor Client (Desktop)

This procedure describes the User Login/Logout interface:

Step	Description
1	The **System Monitor** supports mainstream browsers like Chrome, Firefox, Internet Explorer, and Safari. The portal page supports multi-language and auto-detects the language currently used by browsers for default displaying. You can select the language from the menu at top-right corner to change manually: **NOTE:** In the case, you experience difficulties with **Touch**, then: ● In **Chrome** search bar, key in *chrome://flags/#disable-touch-adjustment* ● Replace the status of **Touch adjustment** from disable to enable. ● Click **RELAUNCH NOW** button.
2	**User Log In** ● You can input valid user name, password, and click **Login** to verify and enter main management page (by default the user is `admin` and password `admin`). ● Check **Auto Login** to allow users to cache login information and auto login each time. **NOTE:** ● For security concerns, do not check this option if you are using a public PC. ● If you forget your password, click **Forgot Password**. Put the registered user email in the prompt dialog after it has auto resent the password to your email.
3	Changing Password for First log in: For the first successful login, new user can change their password or bypass it:
4	**User Log Out** Click **User Log Out** from the right corner menu to check out the system.

Remote Manage Devices Any Time, Any Where

System Monitor is a **Console-Server-Agent** web-based structure for cloud management. Agent here refers to Box iPC devices, and server refers to the server directly in contact with the agent. The server can be a physical entity located in a central control room, or a virtual host set up in a cloud. Console refers to a web-based interface that connects to the server and communicates with the agent through the server. Administrators can perform equipment status and maintenance checks on **System Monitor** console through an Internet browser at any time, from anywhere, using any connected device. The server-agent connection fit the MQTT communication protocol. This improves connection security and stability, and also decreases development time for **System Monitor** integration. The console-server-agent web-based structure not only lowers the difficulty of setting up **System Monitor** network environments when provisioning, but also provides a distributed connectivity structure that solves the challenges encountered with large-scale or multi-site device management. **System Monitor** is a real-time management platform that breaks geographical limitations. Administrators can manage all of their devices by simply using their PCs, smartphones, and tablets.

NOTE: MQTT (formerly message queue telemetry transport) is a publish-subscribe based messaging protocol for use on top of the TCP/IP protocol.

Click **Management Service** to start/stop main **System Monitor** management service:

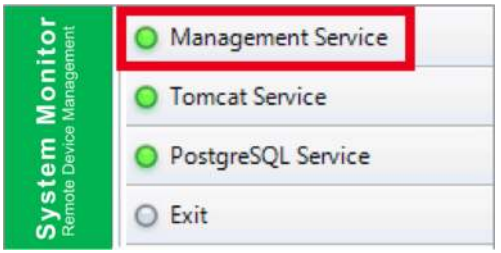

Tomcat Service

Tomcat is an open-source Web server and servlet container. Tomcat implements several Java EE specifications including Java servlet, JavaServer pages (JSP), Java EL, and WebSocket, and provides a Java HTTP Web server environment for Java code to run in.

Click **Tomcat Service** to start/stop **System Monitor** Web service:

PostgreSQL Service

PostgreSQL is an object-relational database management system (ORDBMS). As a database server, its function is to store data and retrieve it later, as requested by other software applications running on another computer across a network and the Internet. It can handle workloads ranging large internet-facing applications with many concurrent users. PostgreSQL provides replication of the database itself for availability and scalability.

Click **PostgreSQL Service** to start/stop **System Monitor** database service:

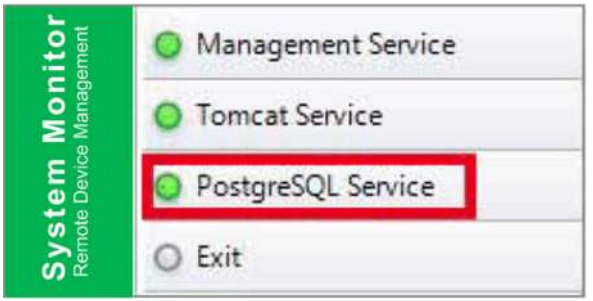

Exit

Click **Exit** to terminate server management console from tray icon and all **System Monitor** services that are still running in the background. You can restart console from Windows/Programs menu:

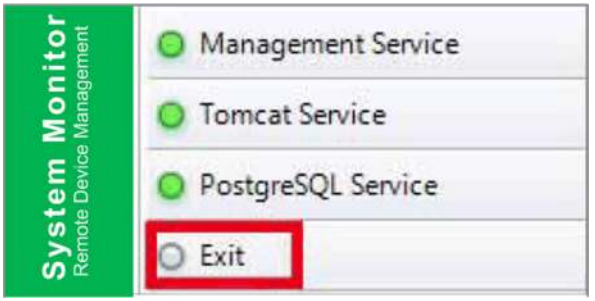

Power Management

Select the action from drop-down menu of each device/group list item to power off, reboot and hibernate device.

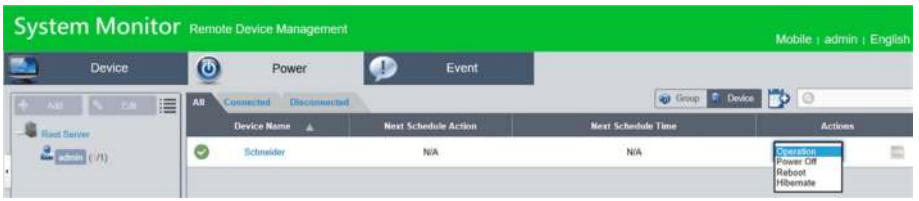

Seamless HW/SW Monitoring for Complete Protection

In order to ensure device stability, **System Monitor** actively monitors device temperatures, voltages, and the states of hard disks and other hardware. In addition to hardware monitoring functions, **System Monitor** has a software monitoring function to oversee program status. Active alerts are sent out if any abnormalities are observed, and **System Monitor** can execute related actions according to user settings, like stopping or restarting processes, which further ensure normal device operation. **System Monitor** provides a comprehensive, seamless, device monitor and control system that includes both hardware and software.

KVM Feature

The **System Monitor** features a remote KVM (keyboard, video, and mouse) and allow remote diagnosis and recovery in any situation. The time saving on trouble shooting with real-time remote monitoring and proactive alarm notifications ensure continued system health.

User-Friendly Map-View Interface

Taking advantage of web-based features, **System Monitor** provides map-view interface and leverages Google and Baidu maps to help administrators locate and manage their devices more easily. In addition to the maps, **System Monitor** also provides for building diagrams to help pinpoint device locations in offices, factories, or wherever. **System Monitor** provides a user-friendly interface in an overall easy-to-use environment.

NOTE: Baidu maps is a Chinese online mapping service.

Device Management - Monitoring Rules

Device Management

This procedure describes how to use the **Device Management** user interface:

Step	Description
1	**Device management** ● After user login, **Device** is the default page. ● **Device** management page is composed of a system hierarchy tree (left-side) and device list (right-side). ● **Device** management provides three levels of management view: **Device List**, **Group List**, and **Map View.** ● System hierarchy tree includes server, account, and group node for device/group list mode as well as location, layout, and device node for map view mode. Each node supports corresponding operations (add/delete/edit) according to node attributes. 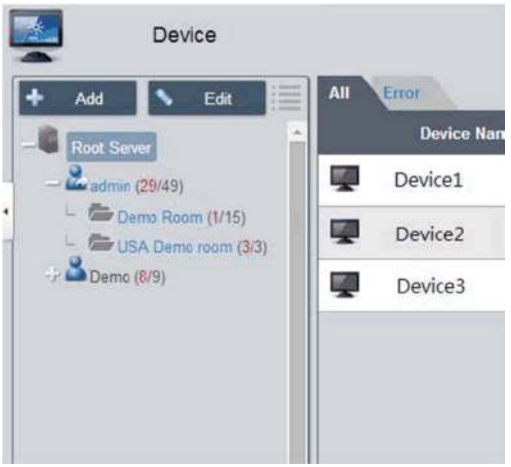
2	View mode – Device status list:

Step	Description
3	**Add/Delete/Edit device server** Add device server: Select on one of server nodes and click **Add** to the pop-up menu option: Click **Add Server** to pop up the **Device Server** dialog for new subserver registering. **Delete device server:** Click **Edit** to switch to edit mode and click the icon **X** to delete this server node. **Edit device server:** Click **Edit** to switch to edit mode and select one of the server nodes. You can remove and edit this server node.
4	**Add/Delete/Edit device group** Add device group: Select one user account and click **Add** to the pop-up menu option. Click **Add Group** to pop up **Device Group** dialog for new group addition:

Step	Description
5	**Delete /Edit device group** Delete /Edit device group: Click **Edit** to switch to edit mode and select one of the group nodes. You can remove and edit this group node:
6	**Add/Delete/Edit device** Add device: Select one of the user accounts or groups and click **Add** to the pop-up menu option. Click **Add Device** to the pop-up dialog for new device addition:

Step	Description
7	**Manual add** Click **Add Device** to pop up the **Add Device** dialog to add a device manually. You can input known device ID or MAC addresses that have already registered to the server and assign a current account or group. If the device does not exist, you can also add a device directly:
8	**Search device** Click **Search Device** to pop up the **Device** dialog for advanced device smart search. The system auto-discovers both connected and unassigned devices located at the same local area network as the client user:
9	**Delete device** Click **Edit** to switch to edit mode. You can remove and edit devices on the device list in this mode. Click the **X** icon for the selected device row and confirm the device warning removal:

Step	Description
10	**Edit device** Click **Edit** to switch to edit mode. You can remove and edit devices of the device list in this mode. Click selected device name to pop up the **Device** dialog for editing:

KVM Viewer

Step	Description
1	**Remote control – KVM viewer** When a device has been connected, the remote control icon shows on the right side of the device name. Click the icon for advanced controls including KVM (Keyboard Video Mouse) viewer, terminal, and screen shot: 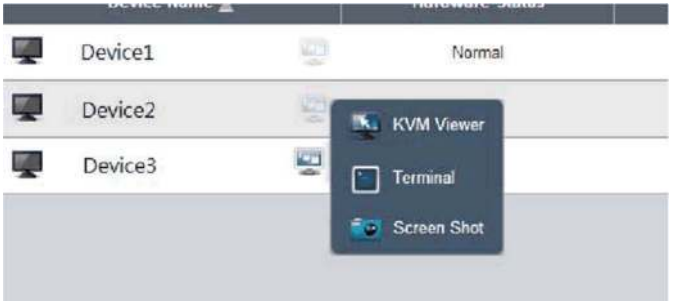
2	**KVM viewer** Click the icon from the remote control menu to connect to the device for KVM control: 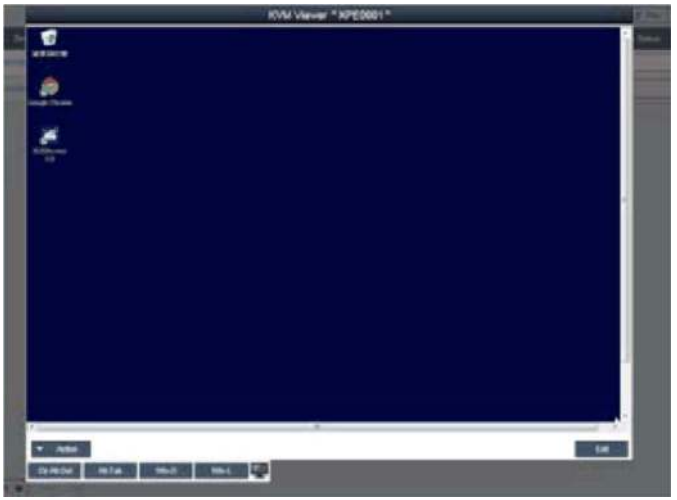 **NOTE:** you can select KVM connection method on the device agent side. System default is System Monitoring KVM (Ultra VNC), you can select other already-installed VNC, or disable this function for security concerns.

Remote Control and Monitoring

Step	Description
1	**Remote control – Terminal** Click the icon from the remote control menu to connect to the device for terminal command-line control:
2	**Remote control – Screen shot** Click the icon from the remote control menu to snapshot the desktop screen of the remote device and save it on the local client side: 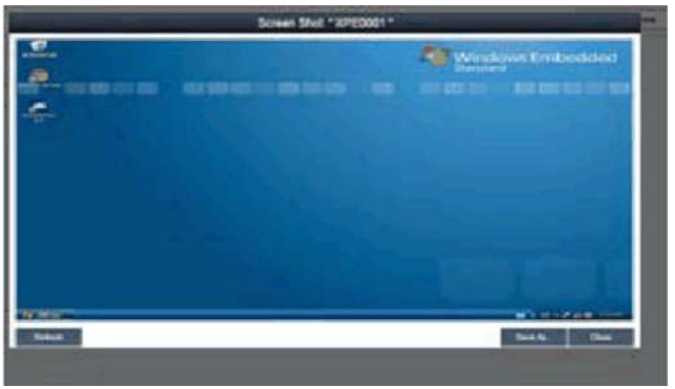

Step	Description
3	**Hardware monitoring status** Real-time monitoring chart: Click the field **Hardware Status** of the device list item to display graphically hardware real-time parameters (memory, CPU usage, temperature, and HDD health status). Click the parameter name to disable/enable displaying of the parameter curve: 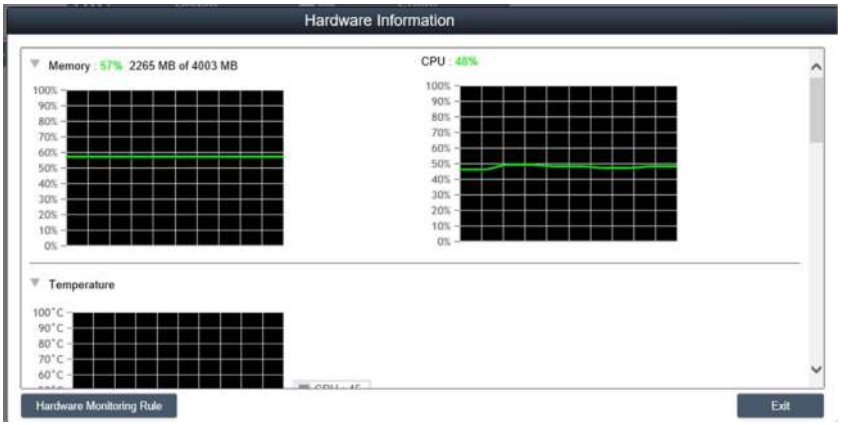
4	**Hardware monitoring fan status** If the fan kit is not installed or the fan rpm is 0 a message will notify: `fan kit not installed or defective`. To get notification about status of the system fan you need to set the appropriate rules, see step Hardware monitoring rules: 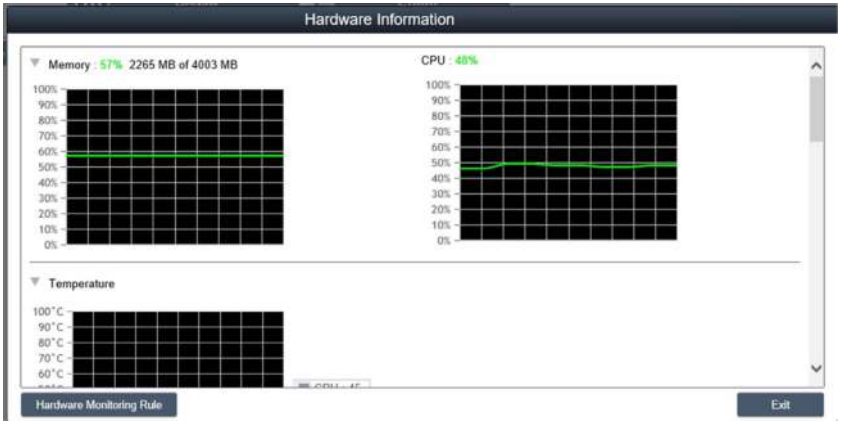

Step	Description
5	**Hardware monitoring UPS health status** If the UPS kit is t installed a message will notify the health status of the battery: `fHealth status of the battery : Battery OK : Green color`. To get notification about status of the system fan you need to set the appropriate rules, see next step: 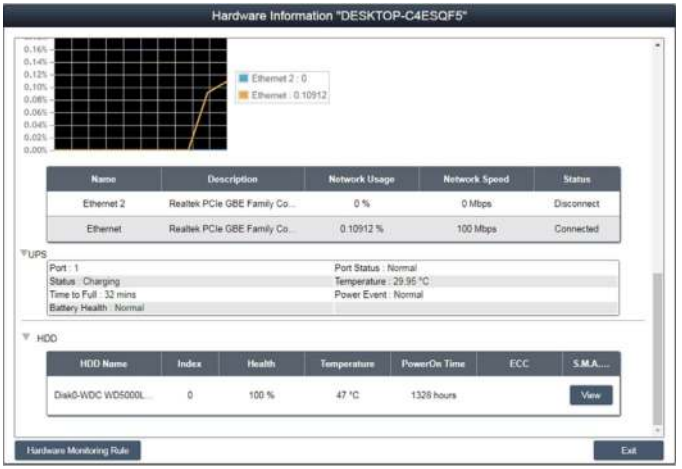
6	**Hardware monitoring rules** Click the button **Hardware Monitoring Rule** to pop up the hardware monitoring dialog. The dialog lists current monitoring rules for hardware parameters includes CPU, voltage, HDD, and so on: 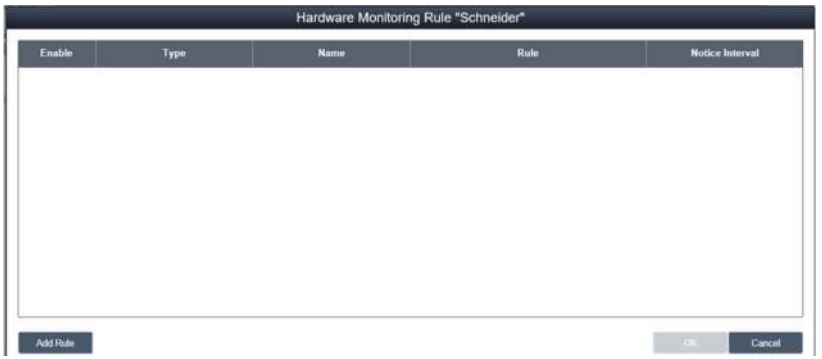

Step	Description
7	**Add rules** Click the button **Add Rules** button to add a new rule for hardware monitoring. You can select the type of monitoring hardware from the menu, input threshold values for the corresponding parameter, the last time in seconds for reaching that threshold and a notice interval for 2 contiguous events. Before clicking **OK**, you can check the option **Enable Monitor Rule** to enable/disable this new rule: 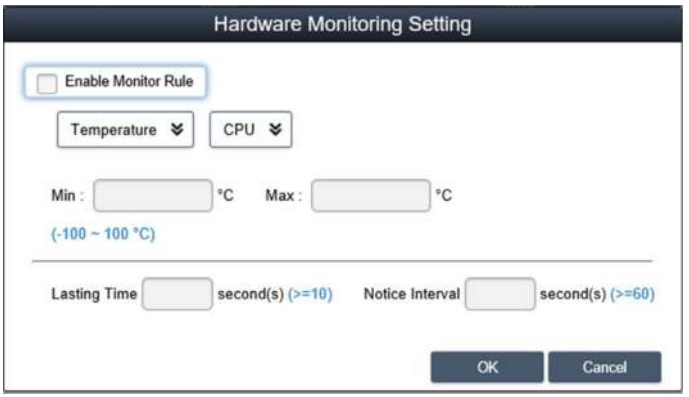
8	**Edit rules** Click a row in the **Hardware Monitoring Rule** box to pop up the **Hardware Monitoring Setting** dialog box: 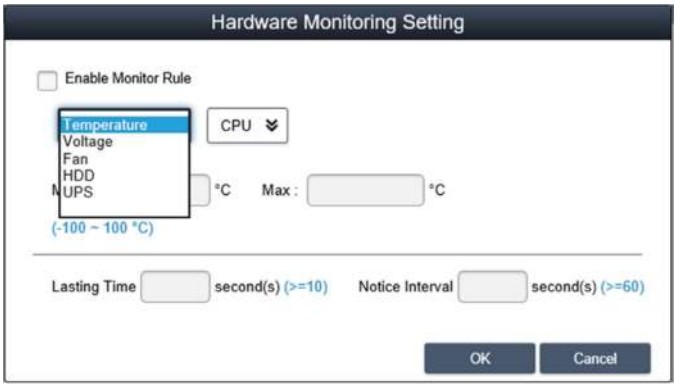 **Delete rules:** Click the **X** icon on the left side of the schedule item to delete the schedule. **Enable/Disable schedule:** Check the enable check box in the schedule row to enable/disable the schedule.

Step	Description
9	**Software monitoring status** Real-time process list: Click the **Software Status** field in the device list to display the status list for active real-time software (name, status, CPU usage, and memory): 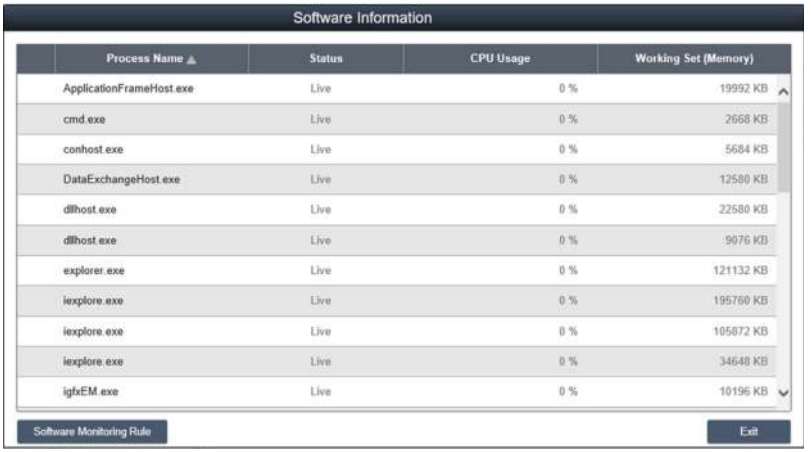 Click the process name to pop up the confirm dialog for killing a specified process, after confirming, you can kill and force the process to terminate: 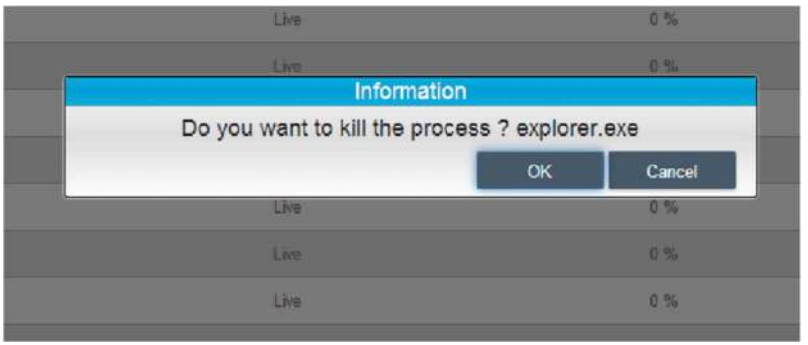

Software Information

Process Name	Status	CPU Usage	Working Set (Memory)
ApplicationFrameHost.exe	Live	0 %	19992 KB
cmd.exe	Live	0 %	2668 KB
conhost.exe	Live	0 %	5684 KB
DataExchangeHost.exe	Live	0 %	12580 KB
dllhost.exe	Live	0 %	22580 KB
dllhost.exe	Live	0 %	9076 KB
explorer.exe	Live	0 %	121132 KB
iexplore.exe	Live	0 %	195760 KB
iexplore.exe	Live	0 %	105872 KB
iexplore.exe	Live	0 %	34648 KB
igfxEM.exe	Live	0 %	10196 KB

Software Monitoring Rule Exit

Information

Do you want to kill the process ? explorer.exe

OK Cancel

Step	Description
10	**Software monitoring rules** Click the button **Software Monitoring Rules** to pop up the dialog for set software monitoring rule. The dialog lists current monitoring rules for software processes:
11	**Add rules** Click the button **Add Rules** to add a new rule for software monitoring. You can input the process name that they want to monitor, the threshold values of the CPU and memory, the last time in seconds for reaching the threshold, and the notice interval for 2 contiguous events and corresponding action. Before clicking the **OK** button to add the rule, you can check the option **Enable Monitor Rule** to enable/disable this new added rule: 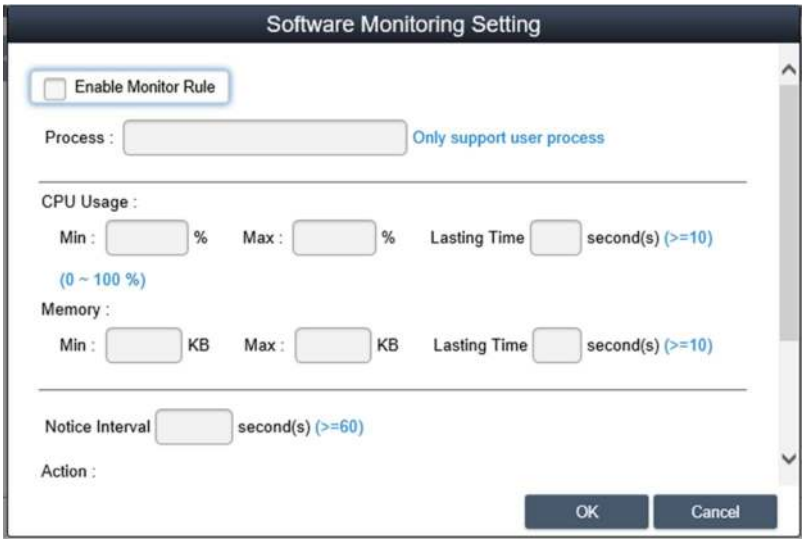 **NOTE:** The software monitoring can only monitor and execute actions for the user process.

Step	Description
12	**Edit rules** Click one of the fields to pop up the **Software Monitoring Setting** dialog for editing: 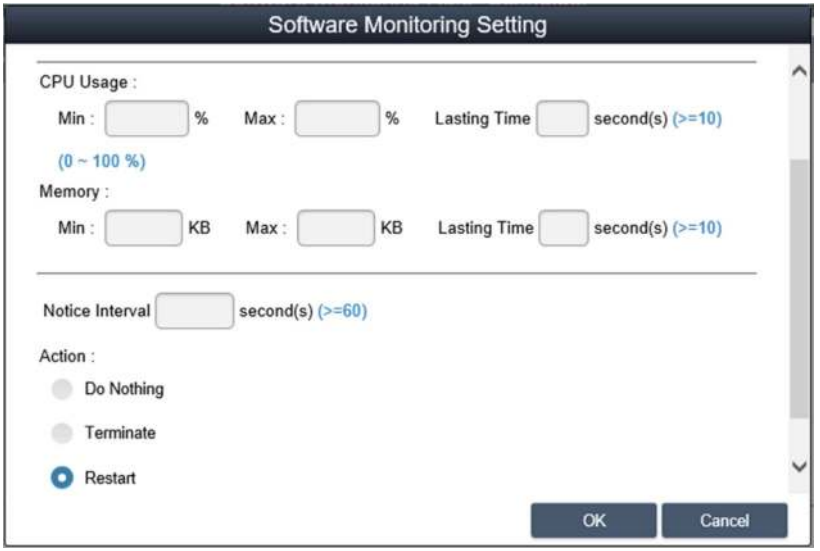 **Delete rules:** Click the icon **X** on the left side of the schedule item to delete the schedule. **Enable/Disable schedule:** Check the enable check box in the schedule row to enable/disable the schedule.

Maintenance Status

Step	Description
1	**Maintenance status** You can modify the maintenance status (none / to be maintained / maintaining / finished) from the menu for each device: 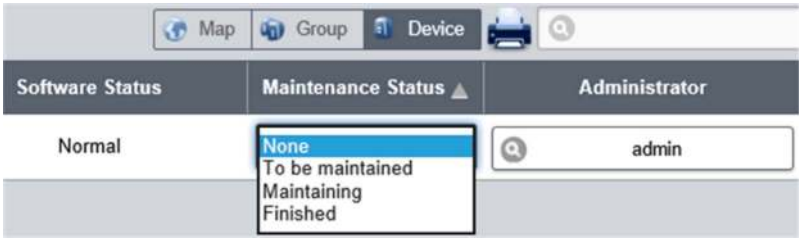
2	**Devices administrator** Users with device management permissions can click the **Admin** field to pop up the selection dialog for administrator to reassign device administrator status to another account: 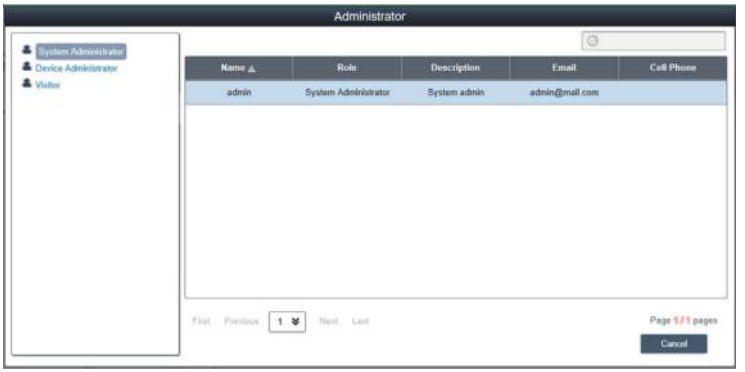
3	**View mode - Group status list** Click the **Group** tab to list groups under the selected account or group node. The group list shows all group names, group hardware status, and group software status: Group hardware status: This field shows the number of all registered devices and incorrect hardware devices under this group. Group software status: This field shows the number of all registered devices and incorrect software devices under this group.

NOTE: Use Chrome as default browser for System Monitor.
In the case, you experience difficulties to **Add Devices** with **Touch**, then:

- In **Chrome** search bar, key in *chrome://flags/#disable-touch-adjustment*
- Replace the status of **Touch adjustment** from disable to enable.
- Click **RELAUNCH NOW** button.

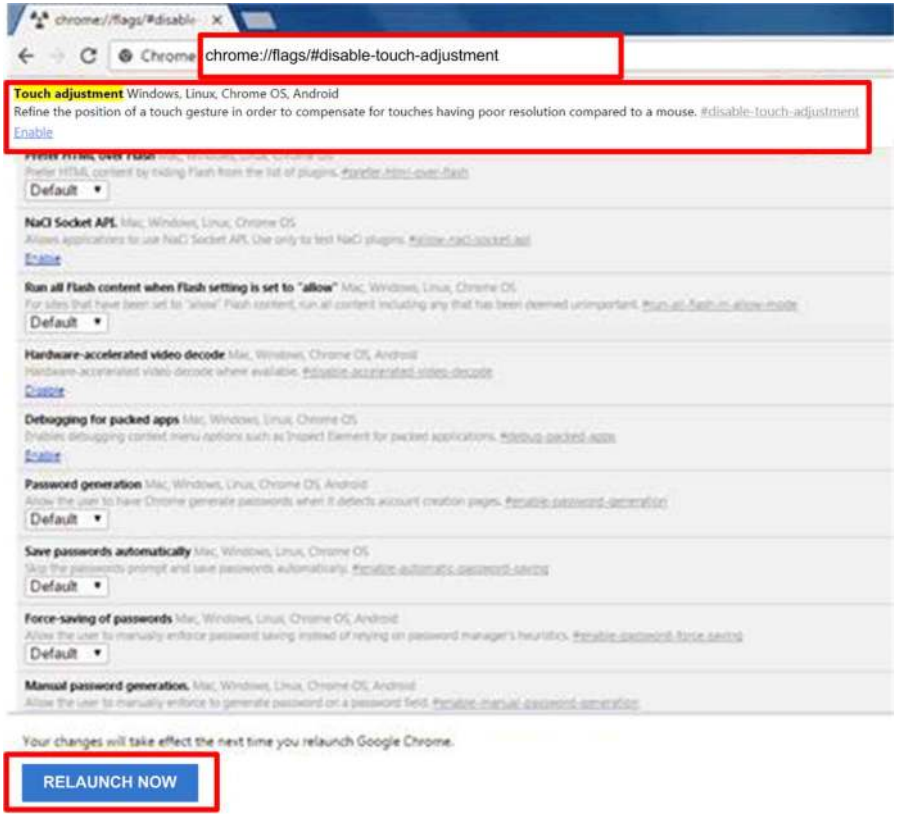

Group Hardware and Software Monitoring Rules

Step	Description
1	Group hardware monitoring rules Click the icon on the right to pop up the dialog **Set Hardware Monitoring Rule**. The dialog lists current monitoring rules and parameters of each group's devices including CPU, voltage, HDD, and so on. **Add group rules:** Click the **Add Rule** button to add a new rule for hardware monitoring. You can select the type of monitoring hardware from the menu, input threshold values of corresponding parameter, last time in seconds of reaching the threshold, and notice interval for 2 contiguous events. Before clicking **OK** to add the rule, you can check the option **Enable Monitor Rule** to enable/disable this new rule. **Edit group rules:** Click the rule field to pop up the **Hardware Monitoring Setting** dialog for editing. **Delete rules:** Click the **X** icon on the left side of the scheduled item row to delete the schedule. Enable/Disable schedule. Click the enable check box in the row item to enable/disable the schedule.
2	Group software monitoring rules Click the icon in the field of group hardware status to pop up the **Set Software Monitoring Rule** dialog box. The dialog lists current monitoring rules for software processes of group devices. **Add group rules:** Click the button **Add Rule** to add a new rule for software monitoring. You can input the process name that wants to monitor, the threshold values of CPU and memory, the last time of reaching threshold, notice interval of 2 contiguous events and corresponding action when the monitoring rule is applied. Before clicking the button **OK** to add rule, you can check the option **Enable Monitor Rule** to enable/disable this new added rule. **Edit group rules:** Click the rule field to pop up the **Software Monitoring Setting** dialog for editing. **Delete rules:** Click the **X** icon on the left side of the scheduled item row to delete the schedule. **Enable/Disable schedule:** Click the enable check box in the row item to enable/disable the schedule

View Mode

Step	Description
1	**View mode - Device map view** **Device Map View** visualizes each physical device's location, separate user interface as left-side map hierarchy tree includes account, location, layout, and device node and right-side geography view includes online map and static image map. Different tree node support corresponding add, delete, and edit operations and intuitive drag device nodes as well:
2	**Add/Delete/Edit map location** **Add location**: Select on one of account nodes and click **Add** button to add a new location: Input location name, address, or coordination (latitude and longitude), upload image for location displaying and click **OK** to add the new location: 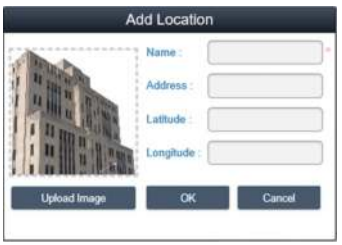 **NOTE:** Map view supports both Google and Baidu online map. These two maps adopt different coordination-system, you must input correct coordination according to online map selection (you can configure in the system settings). If you do not specify either address field or coordination, system will auto location this new added location at the center of current map view.

Step	Description
3	**Delete location** Click **Edit** button to switch to edit mode, click **X** icon ahead of selected location node to delete this location: 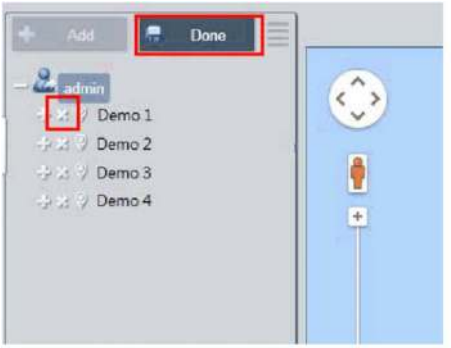 **NOTE:** If there are layouts or devices under selected location node, you must remove these nodes first before removing location node.
4	**Edit location** Click **Edit** button to switch to edit mode, click the location node/name to pop up the dialog of **Edit Location** to edit the content: **NOTE:** Under this mode, drag the location icon on the right-side map view to relocate location.

Step	Description
5	**Add layout** Select on one of location nodes and click **Add** button to add a new layout. Input layout name and description, upload image for location displaying and click **OK** to add the new layout: **Delete layout:** Click **Edit** button to switch to edit mode, click **X** icon ahead of selected layout node to delete this layout. **NOTE:** If there are devices under selected layout node, you must remove these nodes first before removing layout node. **Edit layout:** Click **Edit** button to switch to edit mode, click the location node/name to pop up the dialog of **Edit Location** to edit the content.
6	**Add/Delete/Edit map device** Add device: Select on one of accounts, location, or layout node and click **Add** button to add a new device. Newly added devices are by default located at the center of online or static image map: **Delete device:** Click **Edit** to switch to edit mode and click **X** icon ahead of selected layout node to delete this device. **Edit device:** Click **Edit** button to switch to edit mode, drag the device icon on the right-side map view to relocate device. Under this mode, you can drag the device icon from the right-side map view to left-side account or location or layout node to change pop-up its belonged level.

Event Log

Device event list

Select user account or group to decide event range and select event log type (All/Error/Warning/Information) to browse related device events:

Export CSV

Select device and data/time range to export event log as CSV format to local side:

Monitor Account Setting

Account Setting

This procedure describes how to use the **Account Setting** user interface:

Step	Description
1	Click **Account Setting** from menu of upper-right corner to pop up the dialog of account setting for configuring: 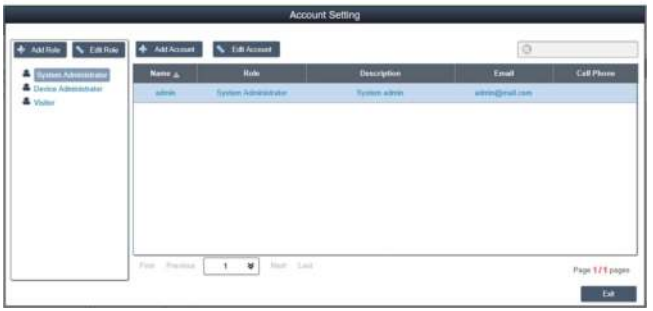
2	**Default role** System provides three default roles with pre-defined access rights: **System Administrator**, **Device Administrator**, and **Visitors**: **NOTE:** The user rights of pre-defined role cannot be edited or deleted but only can be browsed.

Step	Description
3	**View/Add/Delete/Edit custom role** In addition to default role, you can add role with user-defined user rights. **Add Role**: Click **Add Role** to pop up the dialog of **Role**. Input role name and corresponding user rights to create a new role: 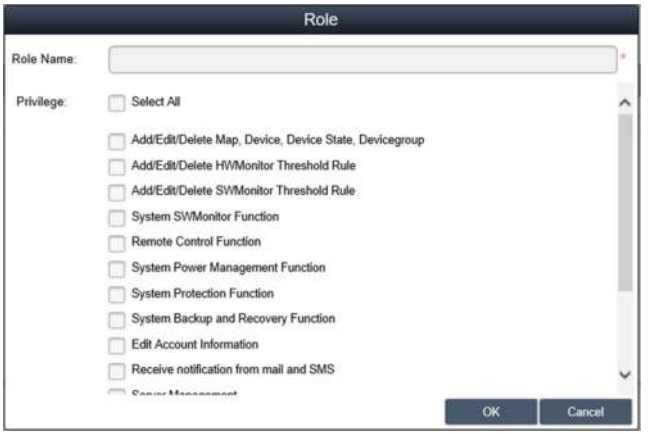 **View/Edit custom role:** Click **Edit** to switch to role edit mode. Click the icon to edit or view role user rights. Click the icon to delete custom role.
4	**View/Add/Delete/Edit account** **View account:** Select one of defaults or custom role and click arbitrary field in the account list to view the details of account: 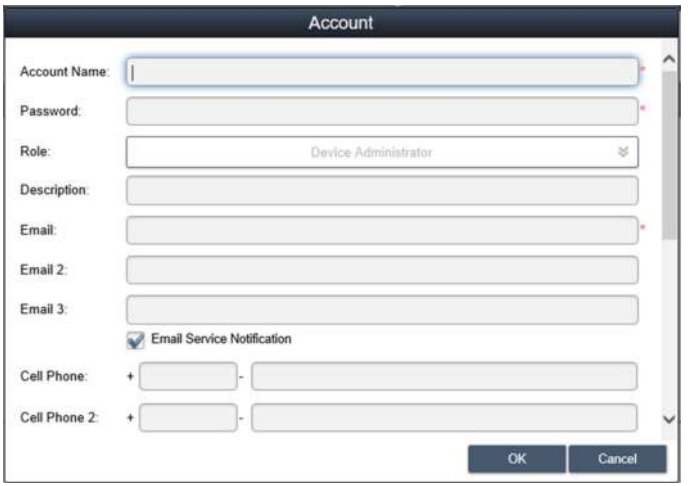

Step	Description
5	**Add account**: Select one of defaults or custom role and click **Add** button to pop up the dialog for creating a new account: 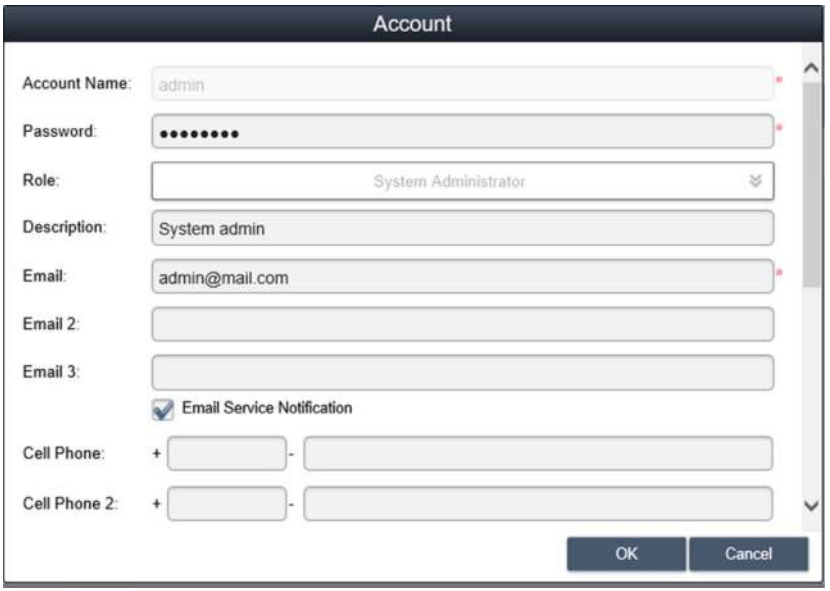 **Edit account**: Click **Edit** button to switch to edit mode. Click arbitrary field in the account list to pop up the dialog for account editing. **Delete account**: Click **Edit** button to switch to edit mode. Click in the account list to delete account. **NOTE: admin** is a super system administrator that cannot be deleted.

Monitor System Setting

System Setting

This procedure describes how to use the **System Setting** user interface:

Step	Description
1	Click **System Setting** from menu of upper-right corner to pop up the dialog of system setting for configuring:
2	**About**: Display server version and local address/port for Web portal:

Step	Description
3	**Email service**: Use SMTP protocol to send notifications via **Email Service**. Before applying setting, click button to send a mail to check validity of settings: **NOTE:** You must enable this email service and check corresponding event notification setting and set up correct email address of device administrator to receive device email notifications while events occur.
4	**Map setting** On-line map supports Google, Baidu. Select map for client default map display: 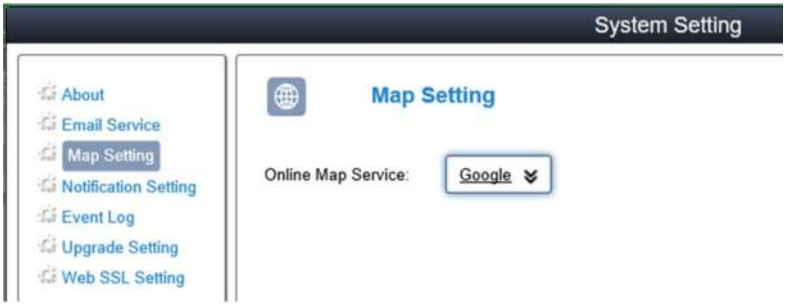

Step	Description
5	**Notification setting** Click tab **Device/Operation/System** to catalog related notification setting. Set event notify by Email on each item to enable receiving:
6	**Advanced settings** Click **Advanced Settings** for message language of email and SMS, cycle days of system automatically sends inspection report, system warning of low hard disk space and external SYSLOG event server setting:

Event log

Select event log type (all / operation / system) to browse related events:

Export CSV

Select data/time range to export event log as CSV format to local side:

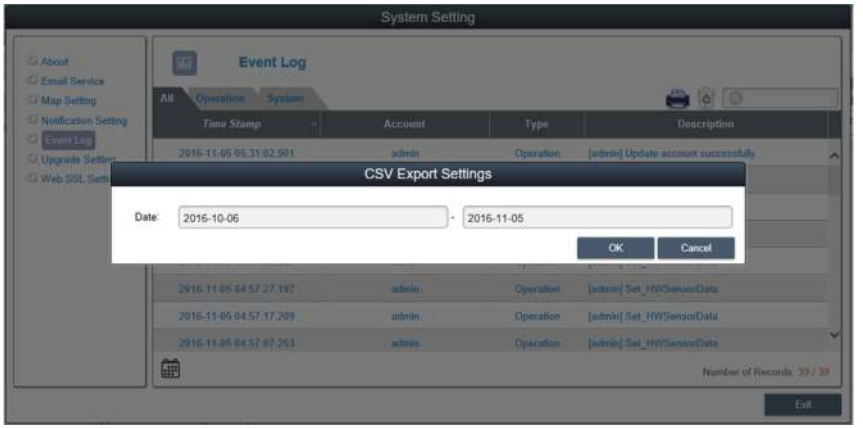

Clearance

Manually or set up automatic period to clean event log:

Upgrade Setting

Use **ValidationCode_Generator.exe** tool to generate MD5 check code of uploading agent upgrade package. Input **Check Code** and select **Upgrade Program** to upload agent upgrade package to server. After uploading, system will auto check all connected agent devices and give hint tag of upgrading on corresponding device list when the user client logs in:

Web SSL Setting

User can switch SSL (Secure Sockets Layer) setting and select the port to open or close SSL:

Installing Node-RED from HMI System Monitor OS SKU

Node-RED Tool Installation

Follow these steps to install the Node-RED tool:

Step	Action
1	Check if the **System Monitor** programs are installed on your device to uninstall them. If the **System Monitor** programs are installed, check if they are installed in the following location: ● This PC\SCHNEIDER (D:)\Software
2	Uninstall the following **System Monitor** programs: ● SystemMonitorAgentSetup_Schneider ● SystemMonitorDriver_Schneider ● SystemMonitorServerSetup_Schneider
3	Right-click on each program and follow the steps to uninstall.
4	Install the following programs stored in the C:\ drive: ● Schneider Electric Brightness ● Schneider Electric ECHWMonitor ● Schneider_Node-RED_installer
5	Right-click on each program and follow the steps to install.
6	Restart the device.
7	Check that the **Schneider IIoT** shortcut is installed on the desktop.
8	Open the following folder: ● SCHNEIDER (D:)\Software\PFnode_Install_packages
9	Right-click on the Install.bat file and select **Run as administrator** to install the Node-RED tool.
10	After the Schneider Node-RED tool is installed, restart the device.
11	Double-click on the **Schneider IIoT** shortcut icon on the desktop to start the Node-RED tool.

Step	Action
12	Click **Continue to this website (not recommended)**, if the following message is displayed: 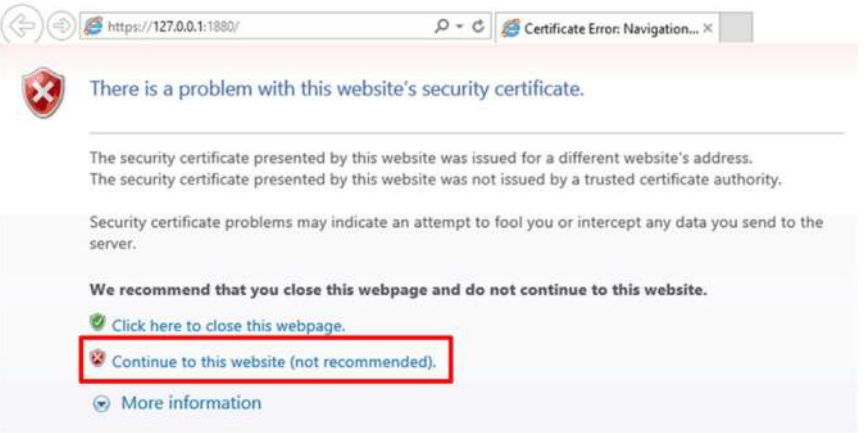 **Result**: The Node-RED login dialog box appears.
13	Enter the following default user name and password: ● **Username**: NR_account ● **Password**: NodeRed#0123
14	Click **Login**.

Chapter 11
IIoT and Cyber Security

Subject of This Chapter

This chapter describes the IIoT and Cyber Security features of the Box iPC.

What Is in This Chapter?

This chapter contains the following topics:

Topic	Page
Cyber Security	410
IIoT and Node-RED	414
Quick Start Configuration	417

Cyber Security

Overview

It is a fact that Industrial and control systems are more and more vulnerable to cyber attacks due to their modern design:

- They use commercial technologies.
- They are more and more connected.
- They can be remotely accessible.
- Their strategic location in the industrial processes is a point of interest for hackers.

Industrial systems have also different cyber security objectives compared to typical IT systems.To secure properly the industrial installation, it is important to understand these differences. Three fundamental characteristics have to be considered:

- Availability of the system: how to ensure that the system remains operational?
- Integrity of the data: how to maintain the integrity of information?
- Confidentiality: how to avoid information disclosure?

The priorities between an industrial system and a typical IT system are not the same as described on the following diagrams:

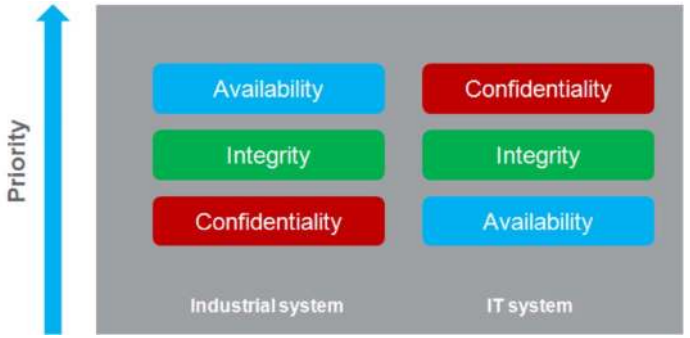

A good recommendation to address these security objectives is to adopt a defense-in-depth approach matching these priorities.

The Harmony Industrial PC provides a defense-in-depth approach by default, thanks to the different security mechanisms it contains.

To help keep your Schneider Electric products secure and protected, we recommend that you implement the cyber security best practices. Following the recommendations may help significantly reduce your company's cyber security risk. For the recommendations, refer to the following URL: *https://www.se.com/en/download/document/7EN52-0390/*

The Harmony Industrial PC enhanced cyber security to access, communicate, and store information:

To keep the system as secured as possible, it is necessary to secure the environment where the Box is installed by following the standard recommendations described below.

Cybersecurity Support Portal: *http://www.schneider-electric.com/b2b/en/support/cybersecurity/overview.jsp*

General Practices

Unauthorized persons may gain access to the Harmony Industrial PC as well as to other devices on the network/fieldbus of the machine and connected networks via insufficiently secure access to software and networks.

To avoid unauthorized access to the Harmony Industrial PC, users are advised to:

- Perform a hazard and risk analysis that considers all hazards resulting from access to (and operation on) the network/fieldbus, and develop a cyber security plan so.
- Verify that the hardware and software infrastructure that the Harmony Industrial PC is integrated into (along with all organizational measures and rules covering access to the infrastructure) consider the results of the hazard and risk analysis, and are implemented according to best practices and standards such as ISA/IEC 62443.
- Verify the effectiveness of the IT security and cyber security systems using appropriate, proven methods.
- Keep your system up to date (security patches).
- Keep your antivirus up to date.
- Define properly the security of the Box: access rights, user's accounts. Ensure that the minimum access rights are given to users to avoid illegal access or too much privilege given to the user.
- Limit the access to the only needed information and users.
- Enable data encryption (available by default or as option depending on part numbers).
- Get optional McAfee protection and enable it.
- Follow the recommendations to secure the Network infrastructure (see **General Practices** chapter in the document **How Can I Reduce Vulnerability to Cyber Attacks in PlantStruxure Architectures?** (*http://www.schneider-electric.com/b2b/en/support/cybersecurity/resources.jsp?*)

Cyber Security Features Available

Cyber security features available on the Harmony Industrial PC:

1. The Harmony Industrial PC architecture is based on the operating system.
2. Hardware can include a TPM module used for security enforcement *(see page 324)*.
3. BitLocker in collaboration with the TPM module is used to secure the hard disk and provide a full encryption of the disk *(see page 329)*.
4. Integrity of the operating system is also checked by UEFI (Extensible firmware Interface) mechanism that ensures that the OS is the official one *(see page 369)*.

NOTE: Taking into account the large number of various configurations and applications, convenient and efficient out of the box settings for the Harmony Industrial PC cannot be provided. It belongs to authorized person in charge of commissioning and configuration to enable or disable functions and interfaces according to cyber security requirements for the applications.

Recommendations For Node-RED

Node-RED can be configured from several channels:

1. Using a connection to the Harmony Industrial PC Node-RED server from another computer in the network.
2. By importing a JSON file in the Harmony Industrial PC using a media or network access.
3. Using Web services from the Node-RED server from an application.

NOTE: What ever the scenario, the user must be sure that the computer used to access the Harmony Industrial PC is safe: OS up to date, security patches up to date, antivirus up to date, no malware on the PC.

When importing a JSON file using removable media like USB key must be done carefully to avoid importation of corrupted JSON files or malware on the Harmony Industrial PC. The operation should be reserved to people authorized to modify the configuration of the Harmony Industrial PC.

NOTE: A configuration of the Harmony Industrial PC has a deep impact on the overall security architecture. All modification done in the box configuration can lead to device access or cloud access by unauthorized users.

The configuration of the Harmony Industrial PC is done thanks to Node-RED configuration with the Node-RED server. The system is provided with an existing set of nodes.

However, for specific needs (specific device access, specific cloud access, specific data management) the user may need new functionalities. This is given by the ability to create new nodes.

NOTE: Creation of new nodes also implies the increase of the attack surface that could lead to an unsecure system.

A Node-RED designer should be aware of the following recommendations to keep the security of the system at the expected level:

- Recommendation 1: Node-RED designers should apply well-known good practices of software engineering to ensure a good quality level and avoid typical mistakes like buffer overflow, bad exception management.
- Recommendation 2: All data coming/going from the devices and more generally all data injected in Node-RED modules should be checked and validated to avoid typical errors like buffer overflow, data injection (see OWASP recommendations for typical errors). Communication errors with devices should also be handled properly to avoid deny of services of the system.
- Recommendation 3: All data coming/going from IT services (like cloud for instance) should be properly checked and validated to avoid information disclosure, deny of services and typical security issues.

IIoT and Node-RED

Overview

The Industrial Internet of Things (IIoT) is the use of Internet of Things (IoT) technologies in manufacturing. The IoT is a network of intelligent computers, devices, and objects that collect and share huge amounts of data. The collected data is sent to Cloud-based service where it is shared with users in a helpful way.

The IIoT works not only at the machine or process level, but from the device itself, to be seamlessly wired to the business systems and Internet data levels. It is a parallel application model, connecting edge to cloud computing: Collecting data from agent.enabled edge devices, connected to field devices, and improving operations and asset performance with cloud applications.

The IIoT runs analytics in the agents, preferably the field device itself, or an edge device connected to the field devices, interfacing with the automation application. The analytics are built and deployed over time without the need to change or even shut down the existing control system.

The IIoT consolidates analytics across a fleet of heterogeneous assets, in disparate geographies. It aggregates data and seamlessly provides analytics at the cloud level, building the digitalized smart factories and improving responsiveness.

Node-RED

Node-RED leverages IT/OT convergence. It is the new software technology to wire the **things** from the field to the Internet IT and cloud applications without the need to modify existing systems. It is the quick path to the IIoT. Node-RED is light, open source, and simple to use. An existing transparent Ethernet TCP/IP network is used with Node-RED.

Node-RED is composed of an editor tool and an engine to make easily and run the connections between the IIoT applications. Any **things** can be connected with Node-RED over the IIoT, including all automation devices with processing capabilities and Ethernet TCP/ IP connections. Even the smallest field devices without such capabilities can be wired with Node-RED thanks to intermediary edge devices that collect data.

Node-RED is the visual tool for wiring the Internet of Things. The Box iPC Nodes are delivered with IIoT package. Any nodes from the Node-RED community can also be used, to “wire” together hardware devices, APIs, and online services in new ways, leveraging Internet of Things and Enterprise 4.0 approaches. It builds the infrastructure for new digitalized services.

Node-RED editor is accessible with Web browser:

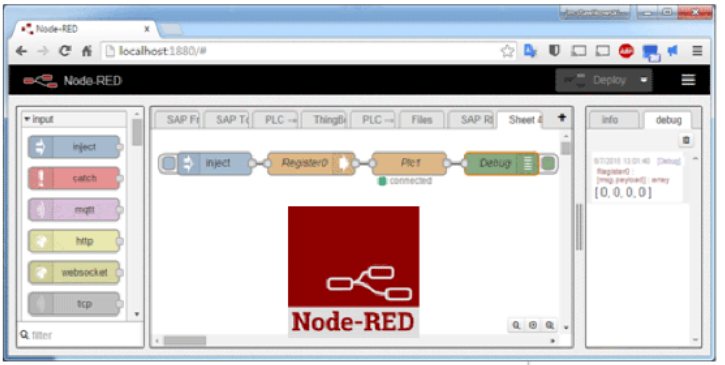

The Box iPC can be upgraded with an IIoT featuring Node-RED. Nodes to monitor and control devices are delivered with the package (internal temperatures, storage disk status, power supply status, SMS/email alerts, device recovery, and so on). Open, any of the thousands of nodes available from the Node-RED community can also be added to **[wire]** together hardware devices, APIs, and online services.

Cybersecurity for the IIoT

Cybersecurity has become a challenge to implementing the IIoT. Using standard network means benefitting from all the security measures already provided by your IT system, such as firewalls, VPNs, and safe zones.

NOTE: The devices with Node-RED can be set to make only **[output]** communication. The cloud applications have no **[input]** communication request to the Node-RED devices. Node-RED devices push data to the cloud. So communications to the machine and plant levels are not necessary and should be avoided to guard against attacks.

NOTE: Schneider Electric adheres to industry best practices in the development and implementation of control systems. This includes a "Defense-in-Depth" approach to secure an Industrial Control System. This approach places the controllers behind one or more firewalls to restrict access to authorized personnel and protocols only.

⚠ WARNING

UNAUTHENTICATED ACCESS AND SUBSEQUENT UNAUTHORIZED MACHINE OPERATION

- Evaluate whether your environment or your machines are connected to your critical infrastructure and, if so, take appropriate steps in terms of prevention, based on Defense-in-Depth, before connecting the automation system to any network.
- Limit the number of devices connected to a network to the minimum necessary.
- Isolate your industrial network from other networks inside your company.
- Protect any network against unintended access by using firewalls, VPN, or other, proven security measures.
- Monitor activities within your systems.
- Prevent subject devices from direct access or direct link by unauthorized parties or unauthenticated actions.
- Prepare a recovery plan including backup of your system and process information.

Failure to follow these instructions can result in death, serious injury, or equipment damage.

Platform as a Service at Server Level

A PaaS is an additional basic and efficient way to protect the plant field level because no data from the field is published directly to external applications. The IIoT server at the fog/intranet level gets a copy of the Box iPC data from the IIoT running in the field. It is no longer necessary to have direct communication from the field to the cloud. The field data is cloned or, even better, aggregated, and benefits from analytics at the IIoT server level in a safe zone of the network before being published to the cloud applications.

Quick Start Configuration

Start to Use Box iPC

There are two OS SKU for Box iPC. One bundled with System Monitor, another bundled with HMI Node-Red. For the OS SKU with HMI Node-Red version, there is the default password for Node-Red. User has to change the default password for Node-Red to use at the first time.

OS Login Password Change

Step	Action
1	Power on Box iPC at the first time.
2	Following the OS recovery procedure *(see page 450)*.

Node-Red Password Change

Step	Action
1	Click Node-Red icon on the Windows desktop to use.
2	At the first time, user is required to change password to start to use.
3	The default login username is **NR_account** and password for Node-Red is **NodeRed#0123**.
4	User must change default password to access Node-Red. Even if you avoid to do so, the **change password page** keeps appearing.
5	User has to enter password every time to use Node-Red. Password change policy: ● Passwords must have at least 12 characters. ● Passwords cannot contain the username. ● Passwords must include the four available character types: lowercase letters, uppercase letters, numbers, and symbols. Symbols must include any one of [!"#$%&'()*+,./:;<=>?@\^_`{|}~-]. **NOTE:** If the password does not meet the above criteria, the system requests again to enter a new password until the criteria is met.

OS Login

Step	Action
1	Power on Box iPC every time after OS recovery procedure is completed.
2	Following the OS recovery procedure *(see page 450)*.

Standard Node-Red

Node-Red is embedded in HMIBMI Operating System image. To up-date the Node-Red version, follow the default installation procedure on Node-Red website. *https://nodered.org/docs/getting-started/installation*

User has to complete the default password change before using Node-Red.

Enter IP address:1880 (port number: 1880) from remote site to use. The password is required to enter every time.

Schneider Electric Node Installation

Node-Red solution is to provide standard Node-Red pre-installed in OS image and Schneider Node which user can install from recovery USB key. Schneider Node also provides sample code and flow sample to help user to use quickly.

Step	Action
1	Insert USB which includes `Software/SEnode_Install_packages` folder.
2	Copy `SEnode_Install_packages` folder to desktop.
3	If you have installed Schneider node in your Harmony Industrial PC before, stop **Schneider Node-RED Service** in **Control Panel → System and Security → Administrative ToolsSystemSecurity → Services**.
4	Right-click `SEnode_Install_packages/Install.bat` and select **Run as Administrator**.
5	After all the install processes are finished, restart the Harmony Industrial PC
6	Launch Node-Red by double-click **Schneider IIoT** shortcut on the desktop.
7	You see Schneider IIoT Nodes are added in **Node List**:

Step	Action
8	Scroll down to see Schneider IIoT Node:

⚠ WARNING

UNINTENDED EQUIPMENT OPERATION

- Do not use System Monitor and Node-Red at the same time.
- If you use Node-Red, remove System Monitor and use recovery key to recover to IIoT Node-Red OS.

Failure to follow these instructions can result in death, serious injury, or equipment damage.

Do not use Node-Red and **System Monitor** at the same time, to avoid any application conflicts. Schneider-Electric has special customized nodes to support hardware.

NOTE: Although Node-Red has standard Node build-in, there is no special Node that can support Schneider-Electric hardware, unless you install the Schneider-Electric Nodes.

Node-RED Dashboard

You need to create your own UI to get hardware information fromSchneider-Electric Node. You can refer to the tutorial of Node-Red dashgoard guide from the following links:

- *http://noderedguide.com/tag/dashboard/*
- *http://noderedguide.com/tutorial-node-red-dashboards-creating-your-own-ui-widget//*

This graphic is an example of dashboard to view all hardware information.

Schneider Node-Red List

- Platform
- UPS
- Hardware Monitor
- Brightness
- AI Module

  NOTE: You can simply change the value in simple code (flow sample code installer), which can be installed through USB key.

Platform Node

The following information can be obtained from **Platform** node:

Node Name	Information	Description/Value
Platform	Model name	The information from Windows API or Supplier SNMP.
	BIOS version	
	EC version	
	OS version	
	CPU name	
	Disk information	
	Memory available	

Step	Action
1	Select **Platform** page:

Step	Action
2	Click **Deploy** button to get all information from debug area:

Step	Action
3	If you want the specific information, for example, **CPU name**: ● Click **Node Name** to change **OSVer** in the **payload** column to **CPUName**. ● Click **Done** to close the window of **Edit inject node**. 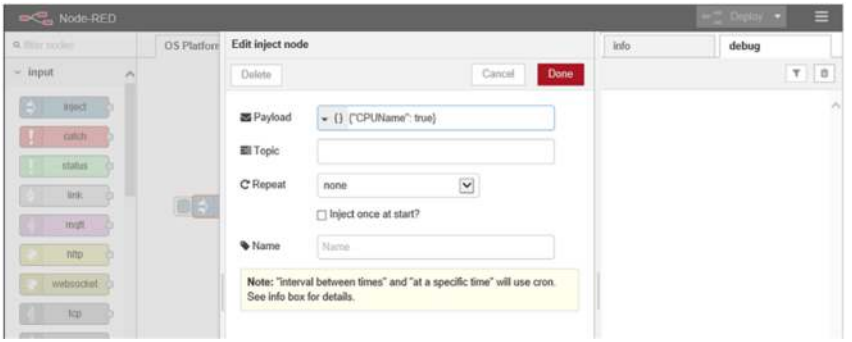 Click **Deploy** and then click inject button to verify the result in debug window: 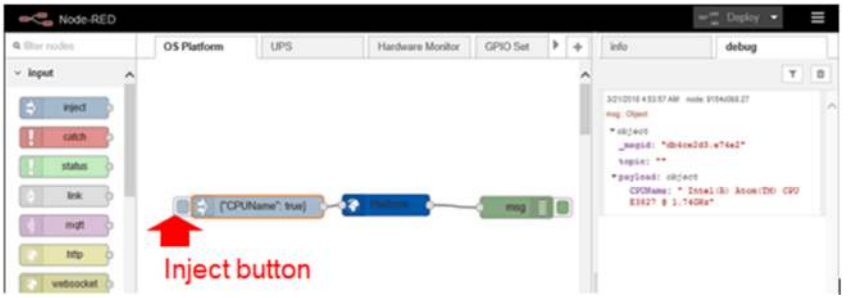
4	Sample flow reference. User can get all up-to-date sample flow from bellow link: *C:\Program Files (x86)\Schneider Electric\IIoT\node_modules\ node-red-contrib-seplatform*.

UPS Node

Node Name	Information	Description/Value
UPS	Emergency Output	● DC-IN is losted. ● Battery over temperature. ● Battery gauge is lost connection. ● EEPROM accesses fail. ● DC-IN is over voltage. ● DC-Out cut-off trigger. ● Restores power to IPS-AE DC-IN.
	Status output	● fwversion: device firmware version. ● ips: the status of device. 1 is ready and 0 is not ready. ● dcin: the status of DC-IN. 1 is ready and 0 is not ready. ● battery: the status of battery. 1 is ready and 0 is not ready. ● inputlostdelay: the DC Input lost detection duration(sec). ● Cutoffdelay: the DC-OUT cut-off delay time(minutes). ● batterylife: battery life (minutes) at the present rate of discharge. "65535" is battery charged. ● temperature: battery. temperature (Celsius). ● maxtemperature: It is the max temperature (Celsius) of battery from the system started. ● batteryvoltage: It is the battery voltage (mV). ● capacity: battery capacity (%).
	Response output	Describe the input result.

Step	Action
1	Select **UPS** page.
2	Double-click **UPS** node: 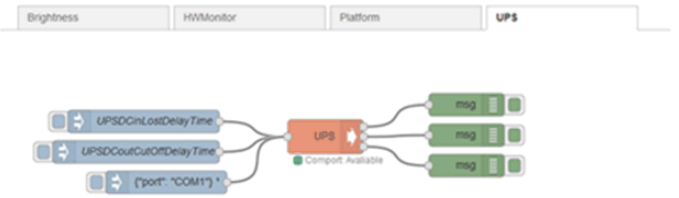

Step	Action
3	Sample code: ● The inputs must be `msg.payload.UPSInputLostDelay` and `msg.payload.UPSCutOffDelay` which are numeric. ● `msg.payload.UPSInputLostDelay` is a number which is the DC Input Lost detection duration(sec). ● `msg.payload.UPSCutOffDelay` is a number which is the DC-OUT cut-off delay time(minutes). ● Another input `msg.payload.port` is COM port name which is used to connect with UPS. 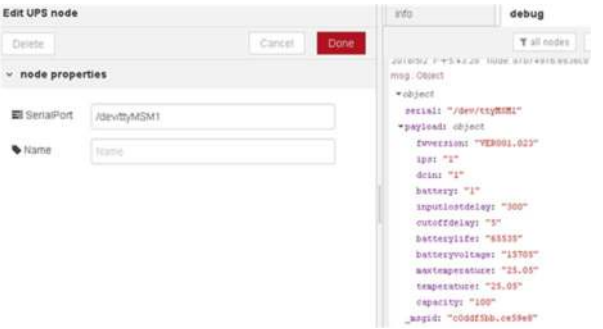

4	Sample code:
	`var ups;`
	`try {`
	`  ups = require('./bin/binding/' + process.platform + '-' + process.arch + '/ipsae');`
	`} catch (e) {`
	`  console.error(e);`
	`  process.exit();`
	`}`
	
	`function emerency(msg)`
	`{`
	`  console.log("[emerency] : " + msg);`
	`}`
	
	`function infomation(msg)`
	`{`
	`  console.log("[infomation] : " + msg);`
	`}`
	
	`// The first argument may be COMn or /deb/tty*n`
	`ups.start("COM1", emerency, infomation);`
	
	`process.on('SIGINT', function() {`
	`  ups.bye();`
	`  process.exit();`
	`});`

Step	Action

5	Sample code:
	`// Check if USP is connected`
	`console.log('UPS status: ' + ups.getSerialStatus());`
	`// Set DC_IN lost delay time (3 ~ 360s)`
	`var dcInLostDelayTime = 0;`
	`console.log('Set DC_IN lost delay time to ' + dcInLostDelayTime`
	`+ 's: ' + ups.setDCinLostDelayTime(dcInLostDelayTime));`
	`dcInLostDelayTime = 300;`
	`console.log('Set DC_IN lost delay time to ' + dcInLostDelayTime`
	`+ 's: ' + ups.setDCinLostDelayTime(dcInLostDelayTime));`
	`// Set DC_OUT cut off delay time (1 ~ 10s)`
	`var dcOutCutOffDelayTime = 0;`
	`console.log('Set DC_OUT cut off delay time to ' +`
	`dcOutCutOffDelayTime + 's: ' +`
	`ups.setDCoutCutOffDelayTime(dcOutCutOffDelayTime));`
	`dcOutCutOffDelayTime = 5;`
	`console.log('Set DC_OUT cut off delay time to ' +`
	`dcOutCutOffDelayTime + 's: ' +`
	`ups.setDCoutCutOffDelayTime(dcOutCutOffDelayTime));`

Hardware Monitor Node

The following information can be obtained from **Hardware Monitor** node:

Node Name	Information	Description/Value
Hardware Monitor	Temperature	All voltage information from embedded control.
	Voltage	
	Current	

Step	Action
1	Select **Hardware Monitor** Page
2	Click **Deploy** button to get all information from debug area: 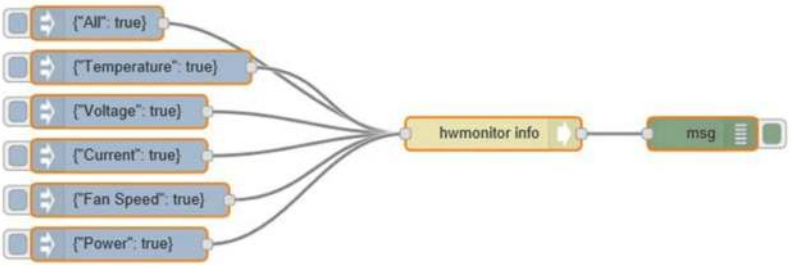

Step	Action
3	Click **Deploy** button to get all information from debug area:

Step	Action
4	If you want the specific information, for example, **Voltage**: ● Click **hwmonitor info node** to change all in the topic column to **Voltage**. ● Click **Done** to close the window of **Edit ihwmonitor info node**. ● Click **Deploy** and then click inject button to verify the result in debug window. 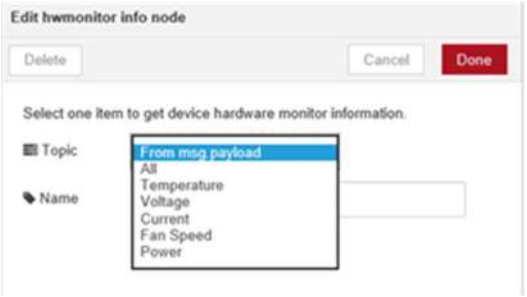
5	Sample flow reference. User can get all up-to-date sample flow from bellow link: */usr/lib/node_modules/node-red-contrib-selmsensor*.

Brightness Get Node

Node Name	Information	Description/Value
Brightness Get	**Mini**	Minimum value of brightness.
	Max	Maximum value of brightness.
	Value	Current value of brightness.
	Auto	Auto brightness status of brightness. [0: manual, 1: auto].

Step	Action
1	Select **Brighness Get** Page
2	Double-click **SetBrightnessOutput** Node

Step	Action
3	Edit Node to change the setting: ● **Min**: Minimum value of brightness ❍ Output (default), type the sentence of **Min**: true, ❍ No output, remove the sentence of **Min**: true, ● **Max**: Maximum value of brightness ❍ Output (default), type the sentence of **Max**: true, ❍ No output, remove the sentence of **Max**: true, ● **Value**: Current value of brightness ❍ Output (default), type the sentence of **Value**: true, ❍ No output, remove the sentence of **Value**: true, ● **Auto**: Auto brightness status of brightness ❍ Output (default), type the sentence of **Auto**: true, ❍ No output, remove the sentence of **Auto**: true, 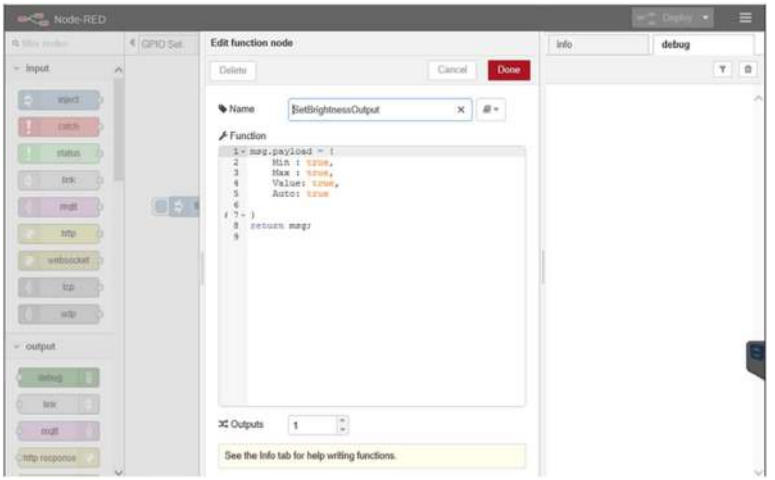
4	Sample flow reference. User can get all up-to-date sample flow from bellow link: C:\Program Files (x86)\Schneider Electric\IIoT\node_modules\node-red-contrib-sebrightness.

Brightness Set Node

Node Name	Information	Description/Value
Brightness Set	**Payload**	Set current brightness value to specified value.
		Set auto brightness.

Step	Action
1	Select **Brighness Set** Page
2	Double-click **AutoBrightness** Node
3	You can configure the payload **True** or **False** 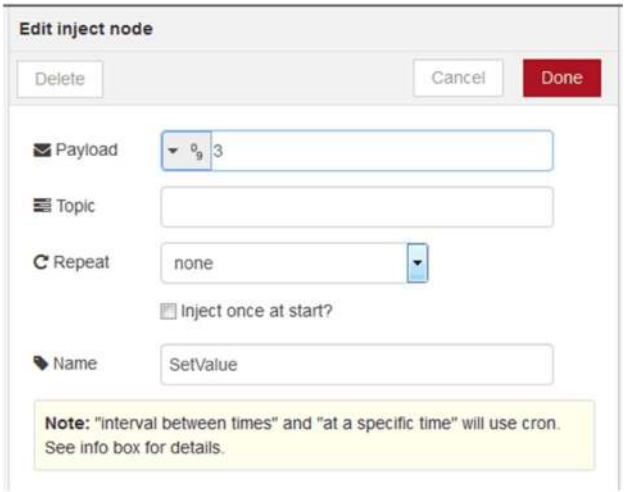
4	Sample flow reference. User can get all up-to-date sample flow from bellow link: C:\Program Files (x86)\Schneider Electric\IIoT\node_modules\node-red-contrib-sebrightness.

AI Module Node

Node Name	Information	Description/Value
AI Module	Get COM port name	COM port name (used by this AI device).
	Get AI device name	AI device name.
	Get AI firmware version	AI firmware version.
	Get AI channel number	AI channel number.
	Get AI value range	AI value range.
	Set AI value range	AI value range setting.
	Get AI value	AI value.

Sample Flow

You can create your own analog input module flow or you can select the **Analog Input** tab to get default analog input sample flow and the sample flow is as below:

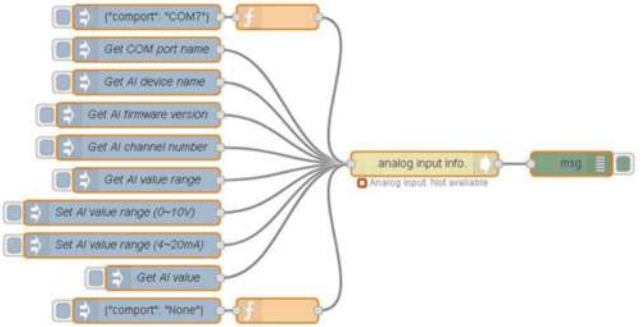

Step	Action
1	Select **AI Module** page.
2	Edit Node to change the setting: 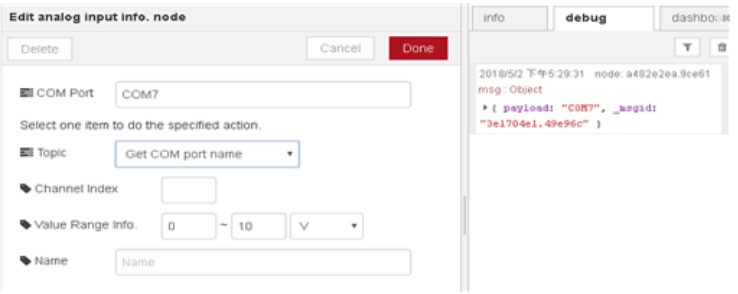

Step	Action
3	At first, COM port path setting is required to make analog input module connect to host. The other functions cannot be used before finishing analog input module connection step. Set a COM port item in an analog **input info node**. (COMx: X = number, for example, COM7, COM number depends on the host.) 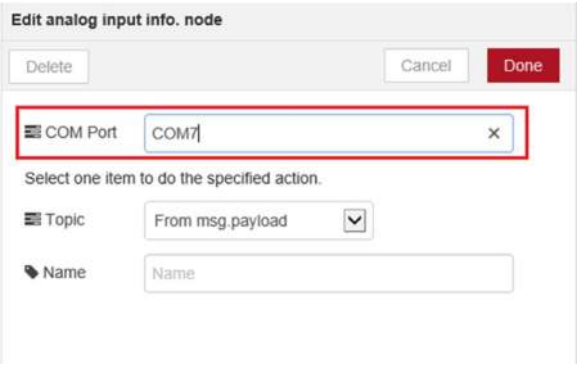 **NOTE:** It can also be set by Input {"comport": "COMx"} to analog input info. node. (COMx: x=number, for example, COM7, COM number depends on the host.) For example, if you want to set COM7, set msg.payload to {"comport": "COM7"} and send this message to this node. 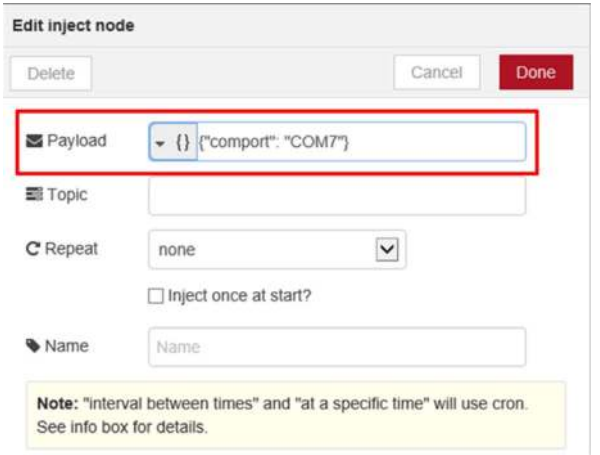

Step	Action
4	Select an item which you want to do in analog input info. node from **Topic** list. 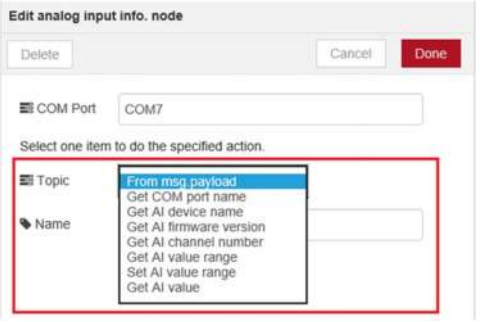

Step	Action
5	In **analog input info node**, select **Get AI value** from **Topic** list and set **Channel Index** field. **NOTE:** f you want to target all the channels, you can set -1 in **Channel Index** field. 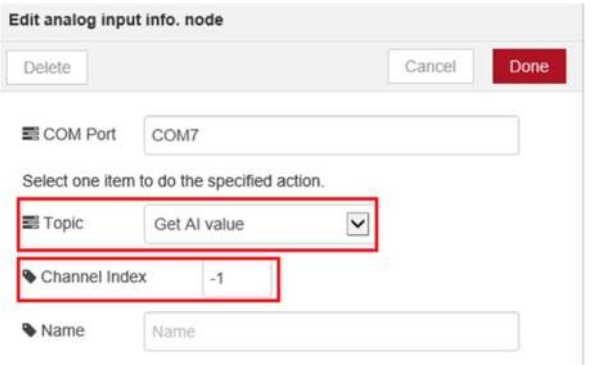 **NOTE:** It can also be set by Input {"attribute name": true} in msg.payload to analog input info. node. For example, if you want to get analog input value, set msg.payload to {"Get AI value": true, "chIdx": -1} and send this message to analog input info. node. If you want to target all the channels, you can set "chIdx": -1. If you want to target channel 2, you can set "chIdx": 2. 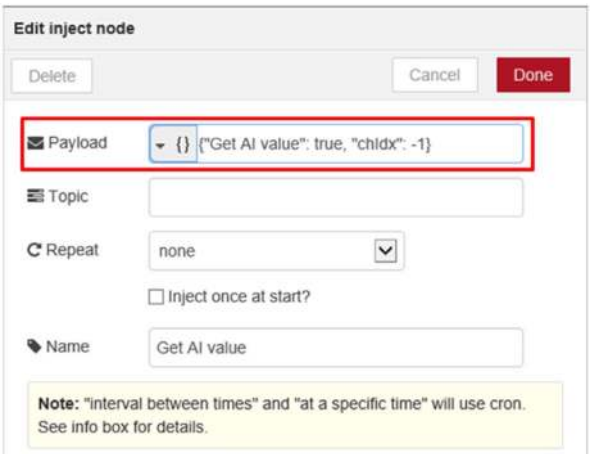

Step	Action
6	If you do not need analog input module, you can set input {"comport": "None"} to disconnect the communication between host and analog input module. The disconnected step ends after the state of the node change from connected to disconnected. 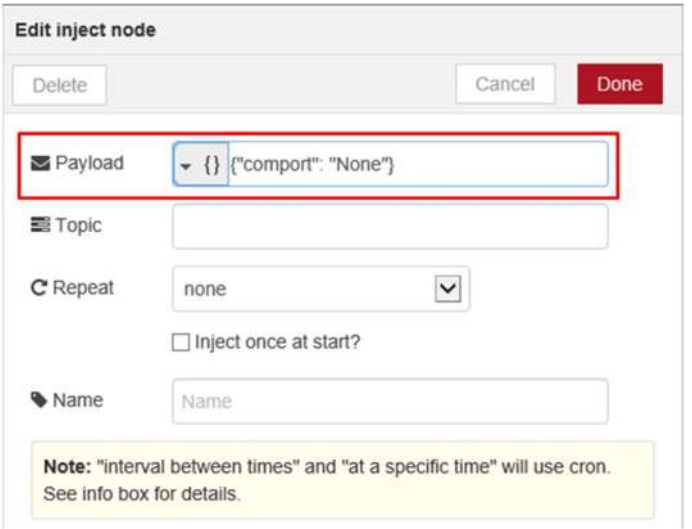
7	Sample flow reference. User can get all up-to-date sample flow from bellow link: C:\Program Files (x86)\Schneider Electric\IIoT\node_modules\ node-red-contrib-seai.

Chapter 12
McAfee Software and Manager Option

What Is in This Chapter?

This chapter contains the following topics:

Topic	Page
Installing the McAfee Software	438
McAfee Manager	439
Uninstalling the McAfee Software and Manager Tool	441

Installing the McAfee Software

Installation

The table describes how to install the **McAfee** software:

Step	Action
1	To install **McAfee** software and manager tool, execute McAfee Installer_Vx.0x.00x.exe setup file.
2	Follow the instructions that appear on the installation screen and click **Restart** to restart your computer. **Result:** When the computer restarts, an **User Account Control** dialog box appears.
3	Click **Yes** **NOTE:** If you do not click **Yes**, the installation fails. **Result:** If the BIOS ID is correct, the **McAfee initialization** starts automatically. When the **McAfee initialization** message disappears, the installation is finished.

McAfee Manager

Based on the configuration, the **McAfee Manager** tool (McAfeeManager.exe) can be located in one of the following folders:

- For x86 computers (32 bit): C:\Program Files\McAfee directory.
- For x64 computers (64 bit): C:\Program Files (x86)\McAfee directory.
- In Windows, **Start** → **McAfee** → **McAfeeManager**.

McAfee Manager

Introduction

McAfee Manager helps you to perform the following actions:

- To configure the McAfee protection and whitelist.
- To add or remove files without using any command line.

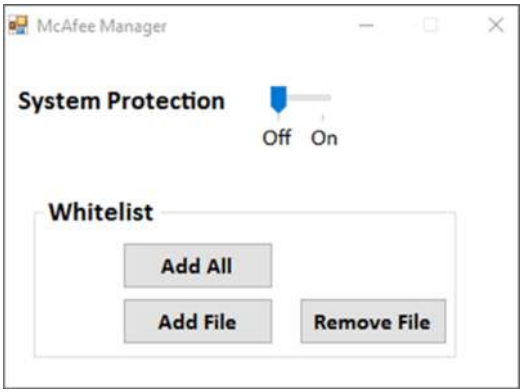

System Protection

This function is used to enable or disable the computer protection.

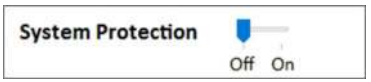

When you move the cursor, the computer is restarted to activate the selected status:

- **Off**: The computer is not protected.
- **On**: The computer is protected.

When you change the status, a message is displayed to indicate that the computer will restart immediately.

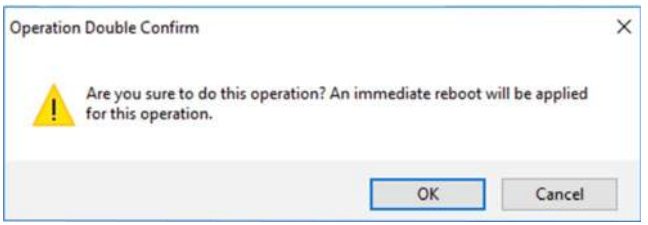

- Click **OK** to restart your computer and activate the status modification.
  or
- Click **Cancel** to cancel the status modification.

NOTE: If you have never used **McAfee Manager** to add a whitelist, a message is displayed to execute **Add All** for whitelist:

Whitelist

Whitelisting is to determine the trusted or known files. When the computer protection is enabled, only the files listed in the whitelist can be executed.

The **Whitelist** function helps you to add files (executed and library) to the whitelist, or to remove files from the whitelist.

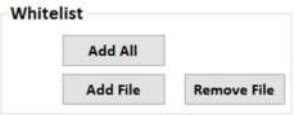

- **Add All**: Adds all the .exe and library files into the whitelist. It might take 30 minutes to 2 hours depending on the CPU performance of the computer.
  NOTE: When you click **Add All**, a Windows command-line displays the status. The command-line window closes automatically when the process is finished. If you close it, then you have to restart your computer and click **Add All** again.
- **Add File**: Adds one .exe or library file into the whitelist.
- **Remove Files**: Removes one .exe or library file from the whitelist.

NOTE: Before using **Add File** and **Remove Files** function, you have to click **Add All** and enable **McAfee** computer protection.
When you click **Add File** or **Remove Files** function, the following message appears to enable **McAfee**:

Uninstalling the McAfee Software and Manager Tool

Uninstallation

The table describes how to uninstall the **McAfee** software:

Step	Action
1	Go to **McAfee Manager** and disable the computer protection.
2	Execute McAfee Installer_Vx.0x.00x.exe setup file. **Result:** The following screen appears: 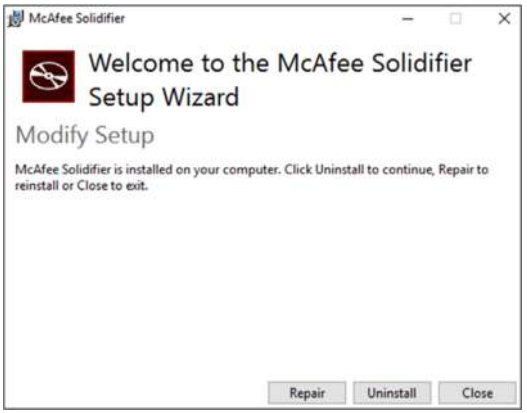
3	Click **Uninstall**.
4	Follow the instructions that appear on the uninstallation screen and click **Restart** to restart your computer. **Result:** When the computer boots up, an **User Account Control** dialog box appears.
5	Click **Yes**. **NOTE:** If you do not click **Yes**, the uninstallation fails.

Chapter 13
Software API

Intelligent Management for Embedded Platform

Description

This **Software API** (Application Programming Interface) is a micro controller that provides embedded features for system integrators. Embedded features have been moved from the OS/BIOS level to the board level to increase reliability and to simplify integration. **Software API** runs whether the operating system is running or not; it can count the boot times and running hours of the device, monitor device health, and provide an advanced watchdog to handle errors found as they happen. **Software API** also comes with a secure and encrypted EEPROM for storing main security keys or other customer defined information. All the embedded functions are configured through an **API** (application programming interface) or by a **DEMO** tool. Schneider Electric provides this suite of **Software API** and the underlying drivers required. Also a set of user-friendly, intelligent, and integrated interfaces speed development, enhance security, and offer add-on value for Schneider Electric platforms.

Chapter 14
Maintenance

Subject of this Chapter

This chapter covers maintenance of the Box iPC.

What Is in This Chapter?

This chapter contains the following topics:

Topic	Page
Reinstallation Procedure	446
Regular Cleaning and Maintenance	447

Reinstallation Procedure

Introduction

In certain cases, it may be necessary to reinstall the operating system.

Precautions to take:

- Keep static-producing materials (plastic, upholstery, carpeting) out of the immediate workpace.
- Do not remove ESD-sensitive components from their anti-static bags until you are ready to install them.
- When handling static-sensitive components, wear a properly grounded wrist strap (or equivalent).
- Avoid contact with exposed conductors and component leads.

Before Reinstallation

Hardware required:

- Recovery media, refer to the leaflet of the recovery media.

Setting up the hardware:

- Shut down the operating system in an orderly fashion and remove all power from the device.
- Disconnect all external peripherals.

NOTE: Save all main data onto a hard drive or a memory card. The reinstallation process returns the computer to its factory settings and erases all data.

Reinstallation

Refer to the procedure in the leaflet provided with the recovery media.

Regular Cleaning and Maintenance

Introduction

Inspect the Box iPC periodically to determine its general condition. For example:

- Are all power cords and cables connected properly? Have any become loose?
- Are all installation fasteners holding the unit securely?
- Is the ambient temperature within the specified range?
- Are there any scratches or traces of dirt on the installation gasket?

NOTE: HDD health must be regularly checked with system monitor according to the usage. HDD is rotative media requiring to be changed regularly according to usage. Data on HDD must be saved regularly.

The following sections describe maintenance procedures for the Box iPC, which can be carried out by a trained, qualified user.

DANGER

HAZARD OF ELECTRIC SHOCK, EXPLOSION OR ARC FLASH

- Remove all power from the device before removing any covers or elements of the system, and prior to installing or removing any accessories, hardware, or cables.
- Unplug the power cable from both the Harmony Industrial PC and the power supply.
- Always use a properly rated voltage sensing device to confirm that power is off.
- Replace and secure all covers or elements of the system before applying power to the unit.
- Use only the specified voltage when operating the Harmony Industrial PC. The AC unit is designed to use 100...240 Vac input. The DC unit is designed to use 24 Vdc input. Always check whether your device is AC or DC powered before applying power.

Failure to follow these instructions will result in death or serious injury.

During operation, the surface temperature of the heat sink may exceed 70 °C (158 °F).

WARNING

RISK OF BURNS

Do not touch the surface of the heat sink during operation.

Failure to follow these instructions can result in death, serious injury, or equipment damage.

Cleaning Solutions

⚠ CAUTION

HARMFUL CLEANING SOLUTIONS

- Do not clean the unit or any component of the unit with paint thinner, organic solvents, or strong acids.
- Use only a mild soap or detergent that will not harm the poly carbonate material of the screen.

Failure to follow these instructions can result in injury or equipment damage.

Lithium Battery

The Harmony Industrial PC contains one battery, for backing up the real-time clock (RTC).

⚠ DANGER

EXPLOSION HAZARD

For battery replacement, contact customer support.

Failure to follow these instructions will result in death or serious injury.

Chapter 15
Operating System Backup and Restoration

Subject of This Chapter

This chapter describes the Operating System **Backup** and **Restoration**.

NOTE: Schneider Electric denied any responsibility when using Microsoft **Backup** and **Restoration** functions.

What Is in This Chapter?

This chapter contains the following topics:

Topic	Page
Operating System Recovery	450
Operating System Backup	454
Operating System Restoration	456

Operating System Recovery

OS Information About Win 10

Windows® 10 have two SKU (stock-keeping unit):

- HMI SKU (Standard System monitor).
- IIoT SKU (Pre-install Node-Red instead of Standard System monitor). Refer to System Monitor *(see page 371)* or IIoT and Cyber Security *(see page 409)* for more detail function. If you replace from HMI version to IIoT version, you can get the Node-Red installer from Schneider Electric Web site (*www.schneider-electric.com*).

Description

To access software and documentation, plug the USB memory key into USB port and navigate to software or documentation folders.

Use USB keyboard and mouse during below process.

Step	Action
1	Insert the USB memory into the USB port and press **F7** during the boot to select the USB Disk for boot. Select **USB DISK 2.0 PMAP** or **UEFI: USB DISK 2.0 PMAP**. 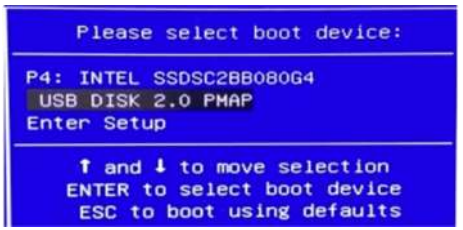 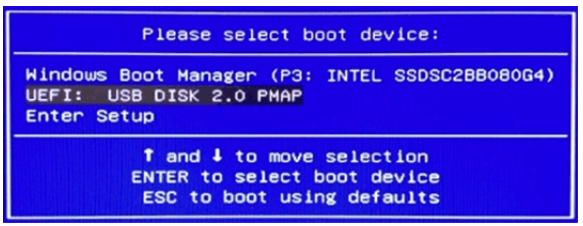

Step	Action
2	Click **Yes** or press **Enter** to continue. 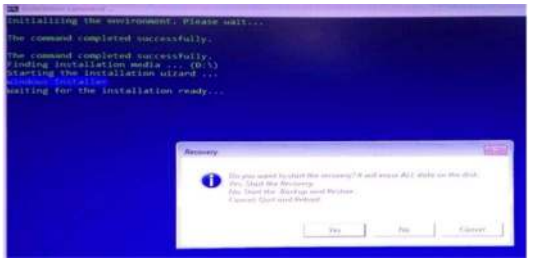
3	**Optional only for Windows® 10**: If the system recognizes you are making recovery for HMIBMP/HMIBMU/HMIBMI/HMIBMO box types, it will pop up new step to ask you to select which OS version you want to recover. There are two OS versions for your selection. One is **Node-Red for IIoT Box** (Node-Red version); the other is **System Monitor for Box PC** (System Monitor version). Read user manual carefully in System Monitor *(see page 371)* and IIoT and Cyber Security *(see page 409)* to decide which OS version you want to recover. 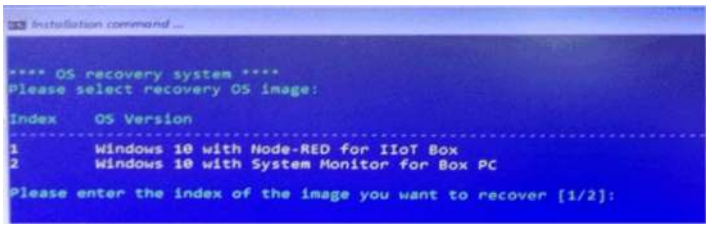
4	**Optional**: If there is more than one valid disk been detected, you have to choose which one you want to use. You need to key in the disk number, for example: 1, 2..., and press **Enter** key to continue. **NOTE:** The order of the disks bases on the plug-in sequences and hardware design. 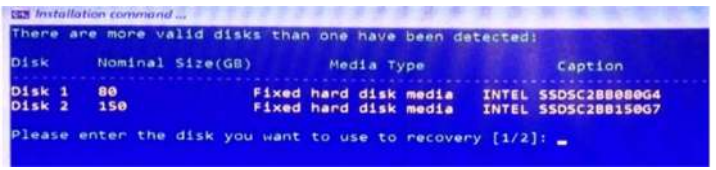

Step	Action
5	**Recovery** function starts automatically.
6	After recovery is finished, click **Shut down** to end the recovery processes or click **Restart** to continue. 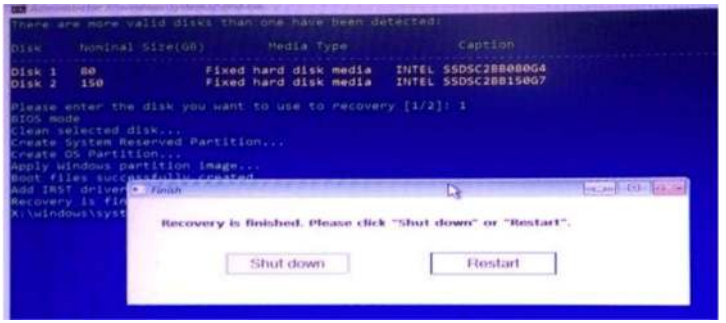

Step	Action
7	Reboot and press **F7** to select the disk as boot device. Select the disk that you did the recovery. 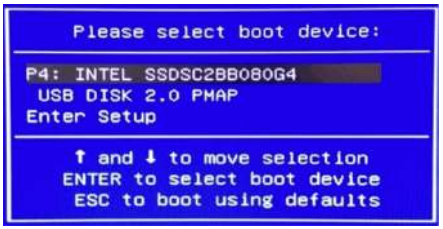 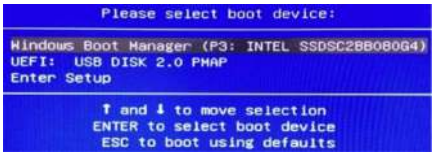
8	Complete the OS initial settings. It may reboot 3 to 4 times to finish.
9	**Optional only for Windows® 10:** If you select IIoT Node-RED SKU in Step3, it will ask you to change the Node-RED password during the recovery. The current default password of Node-RED is **NodeRed#0123**. Password change policy: ● Passwords must have at least 12 characters ● Passwords cannot contain the username ● Passwords must include the four available character types: lowercase letters, uppercase letters, numbers, and symbols. Symbol must include any one of **[!@#$%^&*?_,~]**. 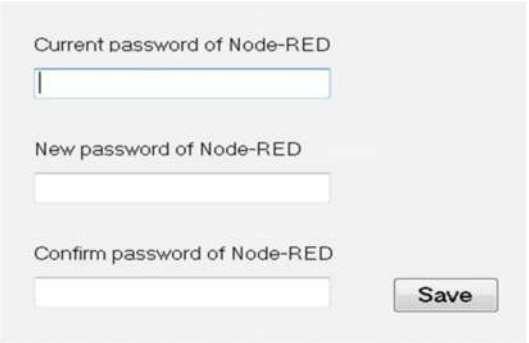 **NOTE:** If the password does not meet the above criteria, the system requests again to enter a new password until the criteria is met.

Operating System Backup

Description

Step	Action
1	Insert the USB memory into the USB port and press **F7** during the BIOS boot to select the USB Disk for boot. **NOTE:** Select **USB DISK 2.0 PMAP** if you want to use **Legacy** mode. Select **UEFI: USB DISK 2.0 PMAP** if you want to use **UEFI** mode.
2	Click **No** to start **backup and restoration**. 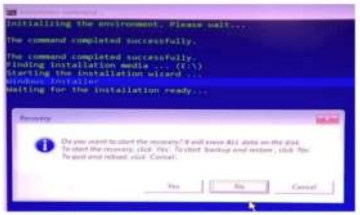
3	Click **Yes** button to start backup process.
4	Optional: select the disk you want to back up (Source). You need to key in the disk number, for example: 1, 2..., and press **Enter** key to continue. **NOTE:** The order of the disks depend on the plug-in sequences and hardware design.

Step	Action
5	Select the disk you want to store the backup file (Destination). You need to key in the disk number, for example: 1, 2..., and press **Enter** key to continue. **NOTE:** The disk number of source and destination must be different. 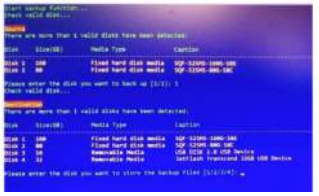 **Result**: Backup process starts.
6	Enter the backup file name. For example, Windows. Then the file name will be `Windows.wim`. 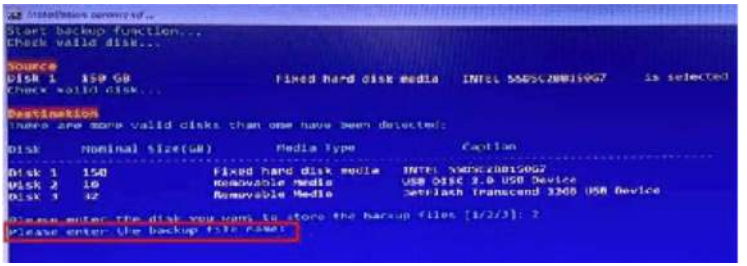
7	After back up is finished, click **Shut down** to end the backup processes or click **Restart** to continue. 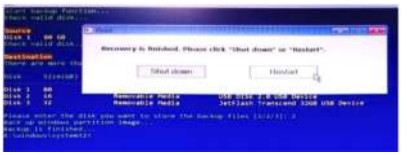

Operating System Restoration

Description

Step	Action
1	Insert the USB stick into the USB port and press **F7** during the BIOS boot to select the USB Disk for boot. **NOTE:** Select **USB DISK 2.0 PMAP** if you want to use **Legacy** mode. Select **UEFI: USB DISK 2.0 PMAP** if you want to use **UEFI** mode.
2	Click **No** to start **backup and restoration**.
3	Click **No** button to start restoration process. 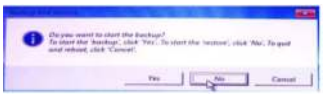
4	Optional: select the disk you want to restore the file (Destination). You need to key in the disk number, for example: 1, 2..., and press **Enter** key to continue. **NOTE:** If only one valid disk is detected, it will select the disk automatically. You can ignore this process. The order of the disks depend on the plug-in sequences and hardware design.

Step	Action
5	Select the disk you want to store the backup file (Source). You need to key in the disk number, for example: 1, 2..., and press **Enter** key to continue. **NOTE:** The disk number of source and destination must be different. **Result**: Restoration process starts.
6	If there are more.wim files in one partition, then you need to key in the index of file name, for example: 1,2..., and press **Enter** key to continue.
7	After restoration is finished, click **Shut down** to end the restoration processes or click **Restart** to continue.

Appendices

Appendix A
Accessories

Accessories for the Box iPC

Available Accessories

Accessories are available as options. The table shows the list of accessories available for the Box iPC:

Reference	Description
Interfaces	
HMIYMINNVRAM1	Interface NVRAM
HMIYMINSL24851	Interface 2 x RS-422/485 isolated
HMIYMINSL44851	Interface 4 x RS-422/485
HMIYMINSL22321	Interface 2 x RS-232 isolated
HMIYMINSL42321	Interface 4 x RS-232
HMIYMINIO1	Interface 16 x DI / 8 x DO
HMIYMIN8AI1	Interface mini PCIe 8 x analog input 0-10 V
HMIYMIN1ETH1	Interface 1 x Ethernet Gigabit IEEE1588
HMIYMINCAN1	Interface 2 x CANopen/CanBus
HMIYMINPRO1	Interface 1 x Profibus DP master NVRAM
HMIYMINUSB1	Interface 2 x USB 3.0
HMIYMINAUD1	Interface audio
HMIYMINAUD21	Interface mini PCIe audio for Box iPC Optimized
HMIYMINGPRS1	Interface 1 x GPRS module
HMIYMINDP1	Interface mini PCIe to Display Adapter
HMIYDATR11	Transmitter for Display Adapter
HMIYDARE11	Receiver for Display Adapter
HMIYMINWIFI1	Interface wireless LAN and 2 x antennas
HMIYMINWIFI2	Interface WiFi access point and 2 x antennas
HMIYCABWIFIAN51	Remote wireless LAN antenna cable 5 m (16.4 ft)
HMIYMIN4GEU1	Interface mini PCIe 4G EU/Asia
HMIYMIN4GUS1	Interface mini PCIe 4G US
HMIYMIN1ETH1	Interface mini PCIe 1 x RJ45 Ethernet for iPC

Reference	Description
HMIYMINDVII1	Interface mini PCIe 1 x DVI-I
HMIYMINVGADVID1	Interface mini PCIe 2 x VGA and 1 x DVI-D
HMIYMINATPM201	Module cyber security TPM 2.0
Drives	
HMIYHDD50021	Hard disk drive 500 GB
HMIYHDD01T21	Hard disk drive 1 TB
HMIYSSDS080S1	SSD 128 GB MLC for HMIBMU/HMIBMP
HMIYSSDS240S1	SSD 256 GB MLC for HMIBMU/HMIBMP
HMIYM2064M1	M.2 SSD 64 GB MLC for HMIBMO
HMIYM2128M1	M.2 SSD 128 GB MLC for HMIBMO
HMIYM2256M1	M.2 SSD 256 GB MLC for HMIBMO
HMIYCFA32S	CFast 32 GB for HMIBMU/HMIBMP
HMIYMADSDD1	Slide-in HDD/SSD for HMIBMU/HMIBMP
HMIYBADHDDBMO1	Carrier HDD/SSD for HMIBMO
Accessories	
HMIYP652PS11	Removable protective sheet HMIP/D W12”
MPCYK50SPSKIT	Removable protective sheet HMIP/D 4:3 15”
HMIYP752PS11	Removable protective sheet HMIP/D W15”
HMIYP952PS11	Removable protective sheet HMIP/D W19”
HMIYPA52PS11	Removable protective sheet HMIP/D W22”
HMIYUSBBK111	USB memory key blank for PC recovery
HMIYMMAC1	AC power supply module 100 W
HMIYPSOMAC1	AC power supply module 60 W
HMIYMUPSKT1	UPS battery
HMIYCABUPS31	UPS 3 m (9.84 ft) cable
HMIYPVESA21	VESA mounting kit for HMIBMU/HMIBMP 2 slots
HMIYPVESA41	VESA mounting kit for HMIBMU/HMIBMP 4 slots
HMIYPVESA6X21	VESA mounting kit for HMIDM 12” and W12”
HMIYBMKTBM1	Maintenance kit
HMIYBFKT4BM11	FAN kit
HMIYADBMODIN11	DIN rail adaptor
HMIDADP11	Display Adapter (DP) for HMIDM
Cables	
HMIYADDPDVI11	Active DP to DVI adapter (DVI-D type)

Reference	Description
HMIYCABDPDVI31	DP to DVI cable 3 m (9.84 ft) (DVI-D type)
HMIYCABDP51	DP to DP cable 5 m (16.4 ft)
HMIYCABUSB51	USB cable 5 m (16.4 ft)
HMIYCAB4GAN51	Remote cable for 4G card 5 m (16.4 ft)
Licence	
HMIYYMACWLIOT1	McAfee licence sticker

Index

0-9

16DI/8DO interface description, *221*
4G cellular description, *305*
8 x analog input interface description, *228*

A

AC power supply module description, *146*
accessories, *461*
audio interface, *264*
    characteristic, *264*

B

Box iPC and AC power supply module installation, *149*
Box iPC Basic Optimized HMI description, *43*
Box iPC dimensions, *96*
Box iPC Optimized (HMIBMO) description, *47*
Box iPC Optimized M.2 card installation, *184*
Box iPC Universal and Performance CFast card, *192*
Box iPC Universal and Performance mini_PCI/PCIe card installation, *199*
Box iPC Universal and Performance mSATA card, *195*
Box iPC Universal and Performance PC description, *53*

C

CANopen interface description, *251*
certifications, *29*
characteristics, *84*, *89*
cleaning, *447*
cyber security module description, *324*

D

DC power cord
    connection, *143*
dimensions
    display, *99*
Display Adapter, *63*, *69*
Display Adapter and AC power supply module installation, *156*
Display Adapter dimensions, *107*

E

environmental characteristics, *93*
Ethernet IEEE interface description, *248*

F

fan kit installation, *207*
first power-up, *133*

G

GPRS description, *300*
grounding, *138*

H

Hazardous Location Installations - For USA and Canada, *31*

I

installation, *111*, *115*
    Display and Display Adapter, *126*
introduction, *110*

M

maintenance, *447*
mini PCIe to display adapter interface description, *276*

N

NVRAM card description, *274*

O

optional interface installation, *210*

P

package contents, *38*
ProfiBus DP interface description, *255*

R

reinstallation procedure, *446*
RS-232, RS-422/485 interface description, *235*

S

serial interface
    pin assignment, *174*
standards, *29*
system monitor
    interface, *372*

U

UPS module, *162*
USB interface description, *271*

V

VGA and DVI interface description, *282*

W

wireless LAN interface card, *259*