TeSys™ GV5PB/GV6PB

Motor Protection Circuit Breakers

Catalog

TeSys offers innovative and connected solutions for motor starters. This catalog contains selection information, accessories, dimensions, and schematics for **TeSys** GV5PB/GV6PB Motor Protection Circuit Breakers**.**

8536CT1901R04/20
Release date 04/2020

Legal Information

The Schneider Electric brand and any trademarks of Schneider Electric SE and its subsidiaries referred to in this guide are the property of Schneider Electric SE or its subsidiaries. All other brands may be trademarks of their respective owners.

This guide and its content are protected under applicable copyright laws and furnished for informational use only. No part of this guide may be reproduced or transmitted in any form or by any means (electronic, mechanical, photocopying, recording, or otherwise), for any purpose, without the prior written permission of Schneider Electric.

Schneider Electric does not grant any right or license for commercial use of the guide or its content, except for a non-exclusive and personal license to consult it on an "as is" basis. Schneider Electric products and equipment should be installed, operated, serviced, and maintained only by qualified personnel.

As standards, specifications, and designs change from time to time, information contained in this guide may be subject to change without notice.

To the extent permitted by applicable law, no responsibility or liability is assumed by Schneider Electric and its subsidiaries for any errors or omissions in the informational content of this material or consequences arising out of or resulting from the use of the information contained herein.

Schneider Electric and TeSys are trademarks and the property of Schneider Electric SE, its subsidiaries, and affiliated companies. All other trademarks are the property of their respective owners.

Table of Contents

Selection....5
Accessories....6
- Add-on Blocks and Accessories for GV5PB....6
- Add-on Blocks and Accessories for GV6PB....7
- Add-on Auxiliary Contacts....8
- Thermal Fault Module, SDTAM....10
- Electric Trips....10
- Lug Kits, Bus Bar Connections, Terminal Shields....11
- Direct Rotary Handle....12
- Extended Rotary Handle....12
- Sealing Accessories....13

Characteristics....14
- GV5PB/GV6PB Characteristics....14
- Electric Trip and Thermal Fault Mode Characteristics....15
- Auxiliary Contact Characteristics....16

Tripping Curves....17
Dimensions....19
- GV5PB and GV6PB Motor Protection Circuit Breakers....19
- GV6PB with Terminal Shield....19
- GV5PB/GV6PB Panel Mounting....20
- Toggle Handle Door Cutouts....21
- Rotary Handle Door Cutouts....22

Minimum Electrical Clearances....23
- GV5PB....23
- GV6PB....24

Schematics....25

Selection

GV5PB150

GV5PB250

The TeSys™ GV5PB/GV6PB product family are three-pole UL 489 motor protection circuit breakers when combined with a contactor that makes up an entire branch circuit. Save panel space and simplify installation using a two-component solution. Features of the product range include selectable trip class 5/10/20 and an adjustable short-circuit time of 5 to 13 times Ir. Solutions cover a range of application needs from compact and cost effective to advanced control and predictive alarming. Choose the best offer based on your application needs.

Table 1 - Thermal-magnetic circuit breakers GV5PB with screw clamp terminals up to 217 A

Interrupting ratings			Thermal setting range	Sensor range[1]	Adjustable range (Isd)	References
208/220/240 V	440/480 V	600 V				
kA	kA	kA	A	A		
65	35	18	58–130	150	5–13 x FLA	GV5PB150N
100	65	25		150	5–13 x FLA	GV5PB150S
65	35	18	114–217	250	5–13 x FLA	GV5PB250N
100	65	25		250	5–13 x FLA	GV5PB250S

Table 2 - Thermal-magnetic circuit breakers GV6PB with screw clamp terminals up to 520 A

Interrupting ratings			Thermal setting range	Sensor range[1]	Adjustable range (Isd)	References
208/220/240 V	440/480 V	600 V				
kA	kA	kA	A	A		
65	35	18	190–348	400	5–13 x FLA	GV6PB400N
100	65	25		400	5–13 x FLA	GV6PB400S
65	35	18	312–520	600	5–13 x FLA	GV6PB600N
100	65	25		600	5–13 x FLA	GV6PB600S

Table 3 - Selection by motor hp for TeSys GV5PB/GV6PB and a TeSys F contactor

220 V, 3 Pole		230 V, 3 Pole		460 V, 3 Pole		575 V, 3 Pole		Max. FLA	GV reference[2]	Dial range	Contactor references[3]
hp	FLA[4]	hp	FLA[4]	hp	FLA[4]	hp	FLA[4]				
30	92	40	104	75	96	100	99	120	**GV5PB150**	58–130 A	LC1F115
40	120	50	130	100	124	125	125	200	**GV5PB250**	114–217 A	LC1F150
50	150	60	154	125	156	150	144	200	**GV5PB250**	114–217 A	LC1F185
60	177	75	192	150	180	150	144	200	**GV5PB250**	114–217 A	LC1F225
60	177	75	192	150	180	200	192	200	**GV5PB250**	114–217 A	LC1F265
75	221	100	248	200	240	250	242	320	**GV6PB400**	190–348 A	LC1F330
100	285	125	312	250	302	300	289	320	**GV6PB400**	190–348 A	LC1F400
125	359	150	360	300	361	350	336	480	**GV6PB600**	312–520 A	LC1F500
150	414	200	480	350	414	400	382	480	**GV6PB600**	312–520 A	LC1F500
—	—	—	—	400	477	450	412	480	**GV6PB600**	312–520 A	LC1F500
—	—	—	—	—	—	500	472	480	**GV6PB600**	312–520 A	LC1F500

1. GV5PB/GV6PB are 80% rated devices.
2. Add N to the end of the reference for breaker interrupting rating 65 kA @ 240 Vac, 35 kA @ 480 Vac, and 18 kA @ 600 Vac. Add S to the end of the reference for 100 kA @ 240 Vac, 65 kA @ 480 Vac, and 25 kA @ 600 Vac.
3. Add the coil suffix to complete the reference. For example, G7 for 120 Vac. See Section 18 of the *Digest* for more coil voltage options.
4. Motor Full Load Ampere sizes are based on NEC® Table 430.250.

Accessories

Add-on Blocks and Accessories for GV5PB

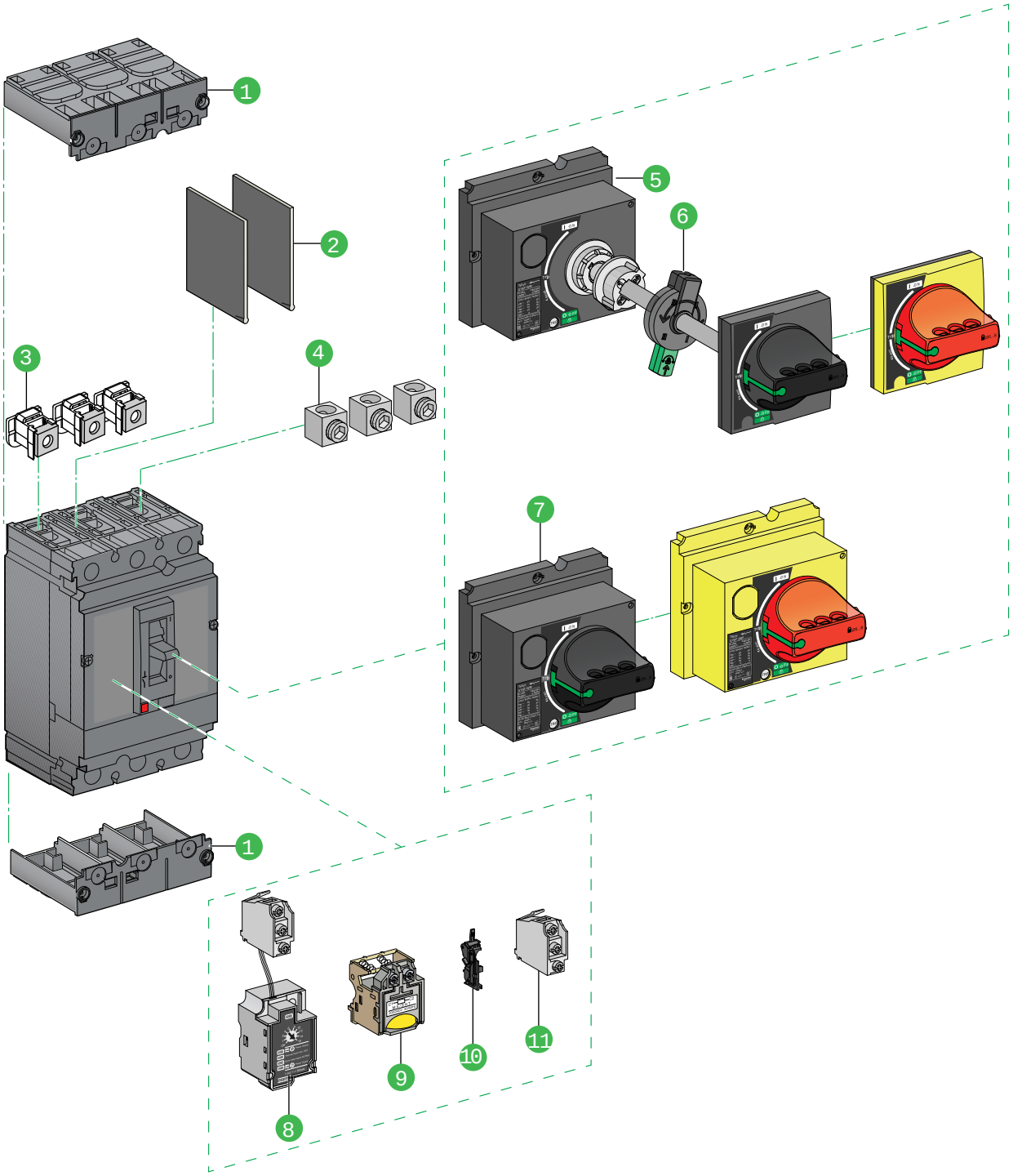

1	Terminal shield	48940-223-02
2	Phase barrier	48940-254-01
3	Terminal nut insert kit	48940-222-01
4	Mechanical lugs	48940-221-02
5	Extended rotary handle	GHD16292AA
6	Open door shaft operator	EAV78496

7	Direct rotary handle	MFR55037
8	SDTAM thermal fault module	48940-318-01
9	AU (UVR) or AS (SHT) voltage releases	MFR55033
10	SDE adapter	See Product Data Sheet.
11	OF, SD, or SDE indication contacts	MFR55023

Add-on Blocks and Accessories for GV6PB

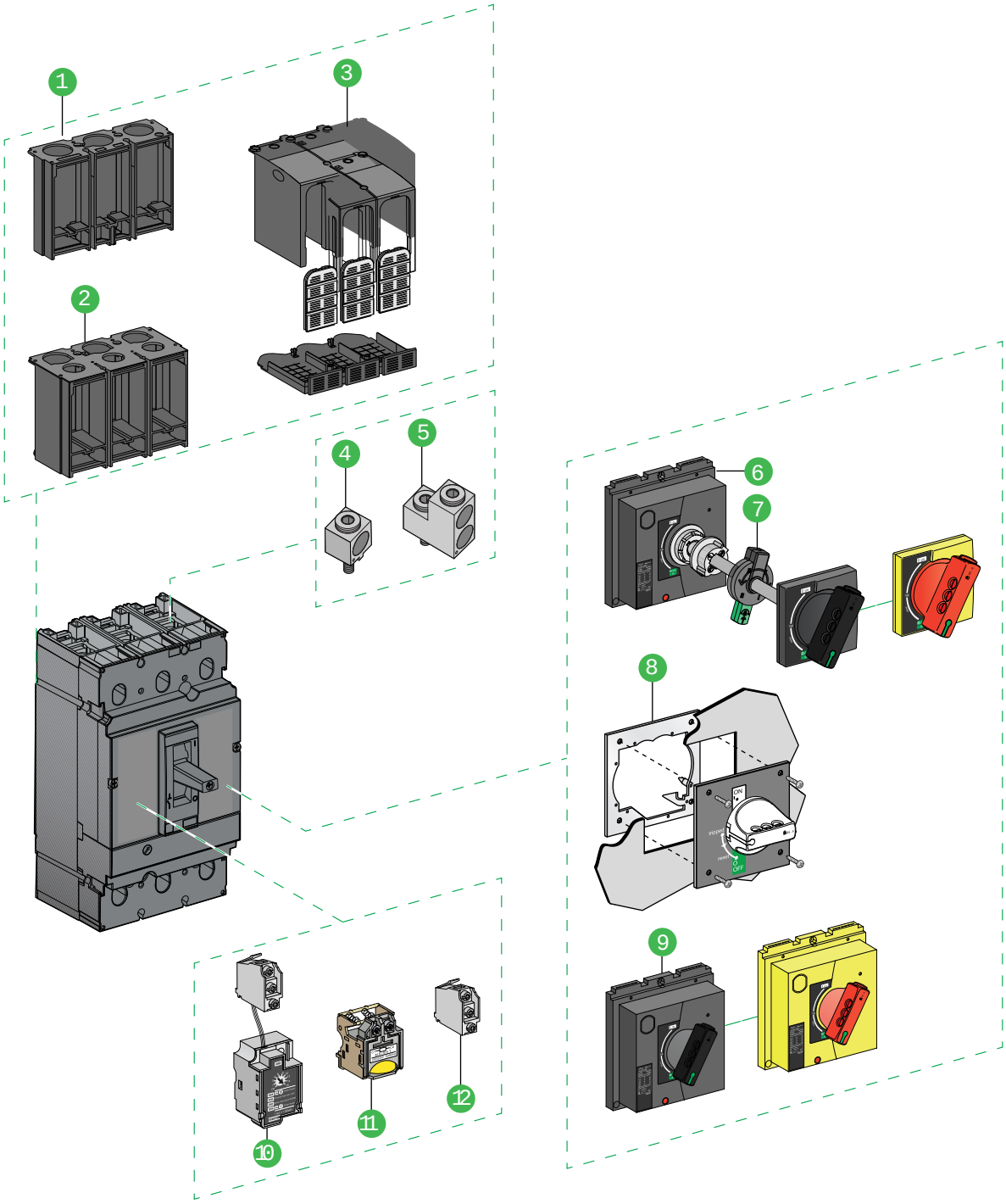

1	LTSS3P short terminal shield	EAV68909
2	LTSM3P medium terminal shield	EAV68909
3	LTSL3P long terminal shield	EAV68909
4	AL400L61K● / CU400L61K● lug kit	S1A14748
5	L600LS52K● / CU600LS52K● lug kit	S1A14748
6	Extended rotary handle	GHD16292AA

7	Open door shaft operator	EAV78496
8	MCC Conversion Accessory	GHD16295AA
9	Direct rotary handle	MFR55039
10	SDTAM thermal fault module	48940–318–01
11	AU (UVR) or AS (SHT) voltage releases	MFR55033
12	OF, SD, or SDE indication contacts	MFR55023

Add-on Auxiliary Contacts

Auxiliary contacts allow remote indication of the circuit breaker contact states. They can be used for signalling, electrical locking, and relaying. They are available in two versions: standard and low level. They include a terminal block. The auxiliary circuits leave the circuit breaker through a hole provided for this purpose. They perform the functions described in the following table, depending on where they are located in the circuit breaker.

Table 4 - Add-on auxiliary contact functions (Location according to Table 6)

Location	Function	Application
A and/or D (GV5PB) B, C, D, and/or G (GV6PB)	C/O contact	Indicates the position of the circuit breaker poles.
B (GV5PB) E (GV6PB)	Trip indication	Indicates that the circuit breaker has tripped due to an overload, a short circuit, a differential fault, operation of a voltage trip (undervoltage or shunt trip), or operation of the "push to trip" test button. Trip indication resets when the circuit breaker is reset.
A and E (GV5PB) A and H (GV6PB)	Electrical fault indication	Indicates that the circuit breaker has tripped due to an overload, a short circuit, or a differential fault. It resets when the circuit breaker is reset.
—	Adapter for electrical fault indication	This accessory is mandatory for GV5PB to provide electrical fault indication.

Table 5 - Add-on auxiliary contact references

Type	References
Standard	GV7AE11
Low level	GV7AB11
Adapter for electrical fault indication for GV5PB	S29451

Table 6 - Auxiliary contact slots

GV5PB

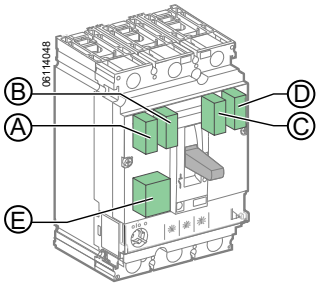

GV6PB

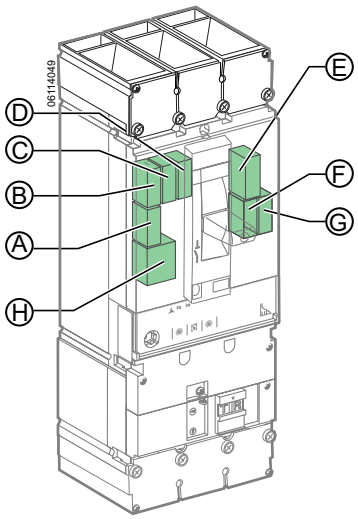

Table 7 - Slots for electrical auxiliary devices, GV5PB

Electrical auxiliary device	Slot				
	A	B	C	D	E
OF1 auxiliary contact	✓	—	—	—	—
OF2 auxiliary contact	—	—	—	✓	—
SD auxiliary contact	—	✓	—	—	—
SDE auxiliary contact (with addition of the optional SDE adapter)	—	✓	—	—	—
AU undervoltage trip release	—	—	—	—	✓
AS shunt trip	—	—	—	—	✓
SDTAM thermal fault module	✓	—	—	—	✓

Table 8 - Slots for electrical auxiliary devices, GV6PB

Electrical auxiliary device	Slot							
	A	B	C	D	E	F	G	H
OF1 auxiliary contact	—	✓	—	—	—	—	—	—
OF2 auxiliary contact	—	—	✓	—	—	—	—	—
OF3 auxiliary contact	—	—	—	✓	—	—	—	—
OF4 auxiliary contact	—	—	—	—	—	—	✓	—
SD auxiliary contact	—	—	—	—	✓	—	—	—
SDE auxiliary contact (with embedded SDE adapter)	—	—	—	—	—	✓	—	—
AU undervoltage trip release	—	—	—	—	—	—	—	✓
AS shunt trip	—	—	—	—	—	—	—	✓
SDTAM thermal fault module	✓	—	—	—	—	—	—	✓

Thermal Fault Module, SDTAM

GV5PB/ GV6PB motor protection circuit breakers can be equipped with a thermal fault module. This module has:

- A contact to indicate an overload fault in the circuit breaker
- A contact to open the contactor. In the event of overload or phase unbalance, this output is activated 400 ms before circuit breaker tripping to open the contactor and avoid circuit breaker tripping.

Table 9 - Thermal fault module reference

Voltage	Reference
24–415 Vac/dc	**S429424**. Takes the place of the AU/AS electric trip coil and an auxiliary contact (C/O contact 1).

Electric Trips

Electric trips allow the circuit breaker to be tripped via an electrical control signal.
Undervoltage release (UVR)—GV7AU:

- Trips the circuit breaker when the control voltage drops below 35% of its rated voltage.
- Between 35% and 70% of the rated voltage, opening is possible.
- Above 70% of the rated voltage, opening does not take place.
- Continuous duty rated coil.
- Circuit breaker closing is possible only if the voltage exceeds 85% of the rated voltage.

Shunt trip (SHT)—GV7AS:

- Trips the circuit breaker when the control voltage rises above 0.7 times the rated voltage.
- Impulse type 20 ms or maintained control signals

Operation—GV7AU or GV7AS:

- When the circuit breaker has been tripped by a GV7AU undervoltage release or a GV7AS shunt trip, it must be reset locally.
- Tripping has priority over manual closing. If a tripping command is present, manual action does not result in closing, even temporarily, of the contacts.
- Durability: 50% of the mechanical durability of the circuit breaker.

Table 10 - Electric trip references

Type	Voltage	References
Undervoltage trip	24 V, 60 Hz	**S29404**
	48 V, 50/50 Hz	**GV7AU055**
	110–130 V, 50/60 Hz	**GV7AU107**
	200–240 V, 50/60 Hz	**GV7AU207**
	380–440/480 V, 50/60 Hz	**GV7AU387**
	600 V, 60 Hz	**S29409**
Shunt trip	24 V, 60 Hz	**S29384**
	48 V, 50/50 Hz	**GV7AS055**
	110–130 V, 50/60 Hz	**GV7AS107**
	200–240 V, 50/60 Hz	**GV7AS207**
	380–440/480 V, 50/60 Hz	**GV7AS387**
	600 V, 60 Hz	**S29389**

Lug Kits, Bus Bar Connections, Terminal Shields

AL150HD Lug Kit

S37447 Terminal Shield

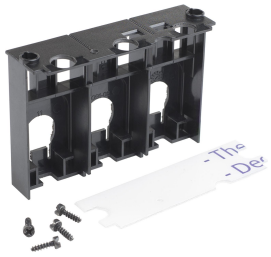

Lug Kits

The connectors for GV5PB snap directly onto the device terminals. GV5PB also has an insert kit which is used for bus bar connection. GV6PB connectors are screwed directly to the device terminals.

Terminal Shields

Terminal shields are used for front connection with cables or insulated bars. They comprise two parts assembled with captive screws, forming an IP40 cover. The top part is equipped with sliding grids for precise adaptation to cables or insulated bars. The rear part completely blocks off the connection zone. Terminal shields may be mounted upstream and downstream of the circuit breaker.

Table 11 - References

Description	Specifications	Compatibility	References
Mechanical lug kits (set of 3)	14–10 AWG (2.5–6 mm²), Al/Cu	GV5PB150••	AL150HD
	14–2/0 AWG (2.5–70 mm²), Cu	GV5PB150••	CU150HD
	4–4/0 AWG (25–95 mm²), Al/Cu	GV5PB250••	AL175JD
	3/0 AWG–350 kcmil (95–185 mm²), Al/Cu	GV5PB250••	AL250JD
	1/0 AWG–300 kcmil (50–185 mm²). Al/Cu	GV5PB250••	CU250JD
	2 AWG–500 kcmil (35–240 mm²), Al 2 AWG–600 kcmil (35–300 mm²), Cu	GV6PB••••	AL400L61K3
	2 AWG–600 kcmil (35–300 mm²), Cu	GV6PB••••	CU400L61K3
	2/0 AWG–500 kcmil (70–240 mm²), Al/Cu	GV6PB••••	AL600LS52K3
	2/0 AWG–500 kcmil (70–240 mm²), Cu	GV6PB••••	CU600LS52K3
	3/0 AWG–500 kcmil (95–240 mm²), Al/Cu	GV6PB••••	AL600LF52K3
	3/0 AWG–500 kcmil (95–240 mm²), Cu	GV6PB••••	CU600LF52K3
Terminal nut insert kits / bus bar connections	1/4-20 Tap (set of 3)	GV5PB150••	S37444
	1/4-20 Tap (set of 3)	GV5PB250••	S37445
	M10 x 25 terminal screws and washers for one side (set of 4)	GV6PB••••	S36967
Terminal shields	Short terminal shield	GV5PB150••	S37447
	Short terminal shield	GV5PB250••	S37448
	Short terminal shield	GV6PB••••	LTSS3P
	Medium terminal shield	GV6PB••••	LTSM3P
	Long terminal shield	GV6PB••••	LTSL3P
Toggle extensions	Fixed (set of 5)	GV5PB••••	S29313
	Fixed (set of 5)	GV6PB••••	S432553
Phase barriers	Phase barriers (set of 6)	GV5PB••••	S29329
	Phase barriers (set of 6)	GV6PB••••	S32570
Padlocks	Removable padlock (lock off only)	GV•PB••••	S29370
	Fixed padlock (on or off)	GV5PB••••	S29371
	Fixed padlock (on or off)	GV6PB••••	S32631

Direct Rotary Handle

GV6A30P Direct Rotary Handle

The circuit breaker can be operated with an optional direct mount rotary handle. The rotary handles comes in two colors, Gray/Black and Yellow/Red, and includes a device for locking the circuit breaker in the O (Off) position by means of up to three padlocks with a shackle diameter of 5–8 mm (padlocks not included). An MCC conversion accessory allows the direct rotary handle to be mounted on the enclosure door. In this case, the door cannot be opened if the circuit breaker is in the “ON” position. Circuit breaker closing is inhibited if the enclosure door is open and prevents the device from being closed if the door is open.

Table 12 - Direct rotary handle references

Description	Type	Sold in lots of	References GV5	References GV6	Degree of Protection
Direct rotary handle	Black handle, black legend plate	1	GV5AP03	GV6AP03	IP40
	Red handle, yellow legend plate	1	GV7AP04	S32599	IP40
MCC conversion accessory	For mounting direct rotary handle on enclosure door	1	GV7AP05	S32606	IP43

Extended Rotary Handle

S32599 Extended Rotary Handle

GV7AP02 Extended Rotary Handle

Extended rotary handles allow you to operate a circuit breaker that is installed in the back of an enclosure from the front. Provides IP55 protection. The extended rotary handle comprises:

- A unit which is screwed onto the front accessory cover of the circuit breaker
- A handle mechanism and front plate assembly to be fitted on the enclosure door
- An extension shaft which must be adjusted

Minimum and maximum distances between the mounting surface and the door:

- 7.28–23.62 in. (185–600 mm) for GV5PB
- 8.23–23.62 in. (209–600 mm) for GV6PB

The extended rotary handle includes a device for locking the circuit breaker in the O (Off) position by means of up to three padlocks with a shackle diameter of 5–8 mm (padlocks not included) and disables opening the enclosure door.

Table 13 - Extended rotary handle references

Description	Type	Sold in lots of	References GV5	References GV6	Degree of Protection
Extended rotary handle	Black handle, black legend plate	1	GV7AP01	S32598	IP55
	Red handle, yellow legend plate	1	GV7AP02	S32600	IP55

Sealing Accessories

S29375 Sealing Accessories

Table 14 - Sealing accessory reference

Description	Reference GV5/GV6
Bag of sealing accessories	S29375

Characteristics

GV5PB/GV6PB Characteristics

Table 15 - Environment

Circuit breaker type				GV5PB/GV6PB
Conforming to standards				IEC/EN 60947-2 CSA C22.2 No. 5 UL 489 NMX J266–213
Product certifications				UL, CSA, NOM, ANCE
Climatic withstand				According to IACS E10
Degree of protection (front face)	Conforming to IEC 60529	Bare circuit breaker with terminal shields		IP40 with direct rotary handle
		Installed in switchboard		IP40 with direct rotary handle IP43 with MCC conversion accessory IP55 with extended rotary handle
Shock resistance	Conforming to IEC 60068-2-27			15 gn – 11 ms
Vibration resistance	Conforming to IEC 60068-2-6			2.5 gn (25 Hz)
Ambient air temperature	Storage in packing		°C	−50 to +85
	Operation		°C	−25 to +70[5]
Flame resistance	Conforming to IEC 60695-2-11		°C	960
Maximum operating altitude			m	2000
Suitable for isolation	Conforming to IEC 60947-1 § 7-1-6			Yes
Resistance to mechanical impact			J	0.5
Sensitivity to phase failure				Yes

Table 16 - Technical characteristics

Circuit breaker type			GV5P-B150	GV5P-B250	GV6P-B400	GV6P-B600
Rated insulation voltage (Ui)	Conforming to IEC 60947-2	V	800			
Rated voltage	Conforming to UL 489, CSA C22.2 No. 5, NMX J266–213	V	600			
Rated operational frequency	UL, CSA, NOM	Hz	50/60			
Rated impulse withstand voltage (U imp)	Conforming to IEC 60947-2	kV	8			
Total power dissipated per pole		W	23	28	38	57
Mechanical durability (C/O: Close, Open)		C/O	4,000	5,000	5,000	5,000
Electrical durability for AC-3 duty	400/415 V (In)	C/O	4,000	1,000	1,000	1,000
Duty class (maximum operating rate)		C/O / hr	5	4	4	4
Maximum conventional rated FLA		A	58–130	114–217	190–348	312–520

5. For temperatures higher than 40 °C inside the enclosure, devices must be derated.

Electric Trip and Thermal Fault Mode Characteristics

Table 17 - GV5PB/GV6PB electric trip characteristics

Type of trip			GV7AU•••, S29404, S29409 undervoltage trip	GV7AS•••, S29384, S29389 shunt trip
Rated insulation voltage (Ui)	Conforming to IEC 60947-1	**V**	690	690
	Conforming to CSA C22.2 No. 14	**V**	600	600
Operational voltage (Ue)	Conforming to IEC 60947-1	**V**	0.85–1.1 Uc	0.7–1.1 Uc
Drop-out voltage		**V**	0.7–0.35 Uc	0.7–0.35 Uc
Inrush consumption	Vac	**VA**	<10	
Sealed consumption	Vac	**VA**	<5	
Operating time	Conforming to IEC 60947-1	**ms**	From the moment the voltage reaches its operational value until opening of the circuit breaker <50	
On-load factor			100%	
Cabling (spring connection)	Number of conductors		1	
	Solid cable	**mm²**	1.5	
	Flexible cable without cable end	**mm²**	1.5	
	Flexible cable with cable end	**mm²**	1	
Tightening torque		**N•m (lb-in)**	1.2 (10.62)	
Mechanical durability		**C/O**	50% of the mechanical durability of the circuit breaker.	

Table 18 - GV5PB/GV6PB thermal fault mode

Type of trip			S429424[6]
Operational voltage (Ue)	Conforming to IEC 60947-1	**V**	24–415 Vac/Vdc
Conventional thermal current (Ith)	Conforming to IEC 60947-5–1	**A**	80 mA maximum

6. S429424 takes the place of the AU/AS electric trip coil and an auxiliary contact.

Auxiliary Contact Characteristics

Table 19 - Auxiliary contact characteristics

Type of contacts				GV7AE11						GV7AB11				
Rated insulation voltage (Ui) (associated insulation coordination	Conforming to IEC 60947–1		V	690						690				
Conventional thermal current	Conforming to IEC 60947–5–1		A	6						5				
Mechanical durability (C/O: Closed — Open)			C/O	50,000						50,000				
Operational current conforming to IEC 60947–5–1 AC operation				AC-12 or AC-15, 50,000 C/O						AC-12 or AC-15, 50,000 C/O				
	Rated operational voltage (Ue)		V	**24**	**48**	**110**	**220 240**	**380 440**	**690**	**24**	**48**	**110**	**230 240**	**380 415**
	Rated operational current (Ie)	AC-12	A	6	6	6	6	6	6	5	5	5	5	5
		AC-15	A	6	6	5	4	2	0.1	3	3	2.5	2	1.5
Operational current conforming to IEC 60947–5–1 DC operation				DC-12 or DC-14, 50,000 C/O						DC-12 or DC-14, 50,000 C/O				
	Rated operational voltage (Ue)		V	**24**	**48**		**110**	**250**		**24**	**48**		**110**	**250**
	Rated operational current (Ie)	DC-12	A	6	2.5		0.6	0.3		5	2.5		0.6	0.3
		DC-15	A	1	0.2		0.05	0.03		1	0.2		0.05	0.03
Minimal operational conditions DC operation			V	24						4				
			mA	100						1				
Short-circuit protection				By GB2CB•• circuit breaker (rating according to operational current for Ue and 415 V) or gG fuse, 10 A maximum										
Cabling	Solid cable (**mm²**)			1 x 1.5 conductor						1 x 1.5 conductor				
	Flexible cable without cable end (**mm²**)			1 x 1.5 conductor						1 x 1.5 conductor				
	Flexible cable with cable end (**mm²**)			1 x 1.5 conductor						1 x 1.5 conductor				

Tripping Curves

Figure 1 - Thermal-magnetic tripping curves for GV5PB

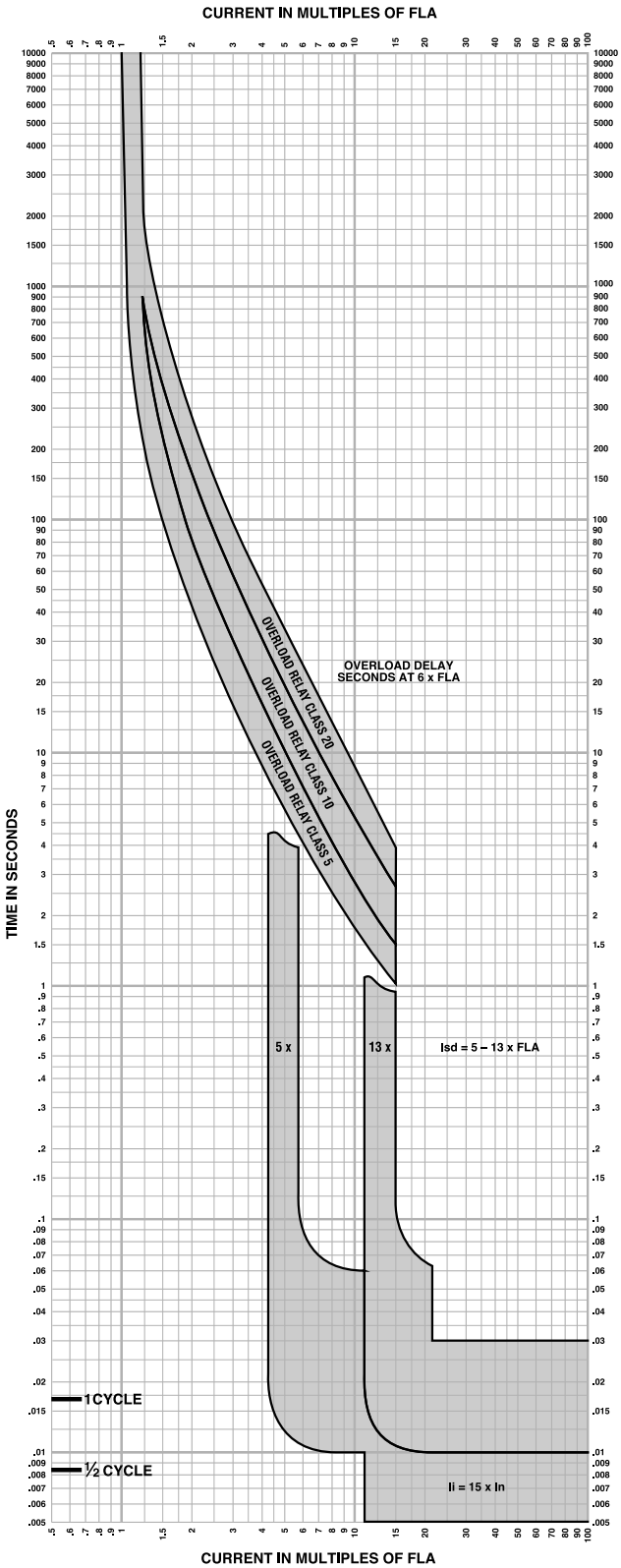

The time-current curve information is to be used for application and coordination purposes only.

Notes:

1. If overload still exists past overload relay delay, motor protection circuit breaker will open 0.4 seconds later.
2. Total clearing times shown include the response times of the trip unit, the circuit breaker opening, and the extinction of the current.
3. Isd minimum and maximum only shown.
4. Ii = 15 x In
   In = 150A, 250A
   Motor protection circuit breaker will trip <30ms at 15 x In

Curves apply from -35ºC to +70ºC (-31ºF to +158ºF) ambient temperature.

Figure 2 - Thermal-magnetic tripping curves for GV6PB

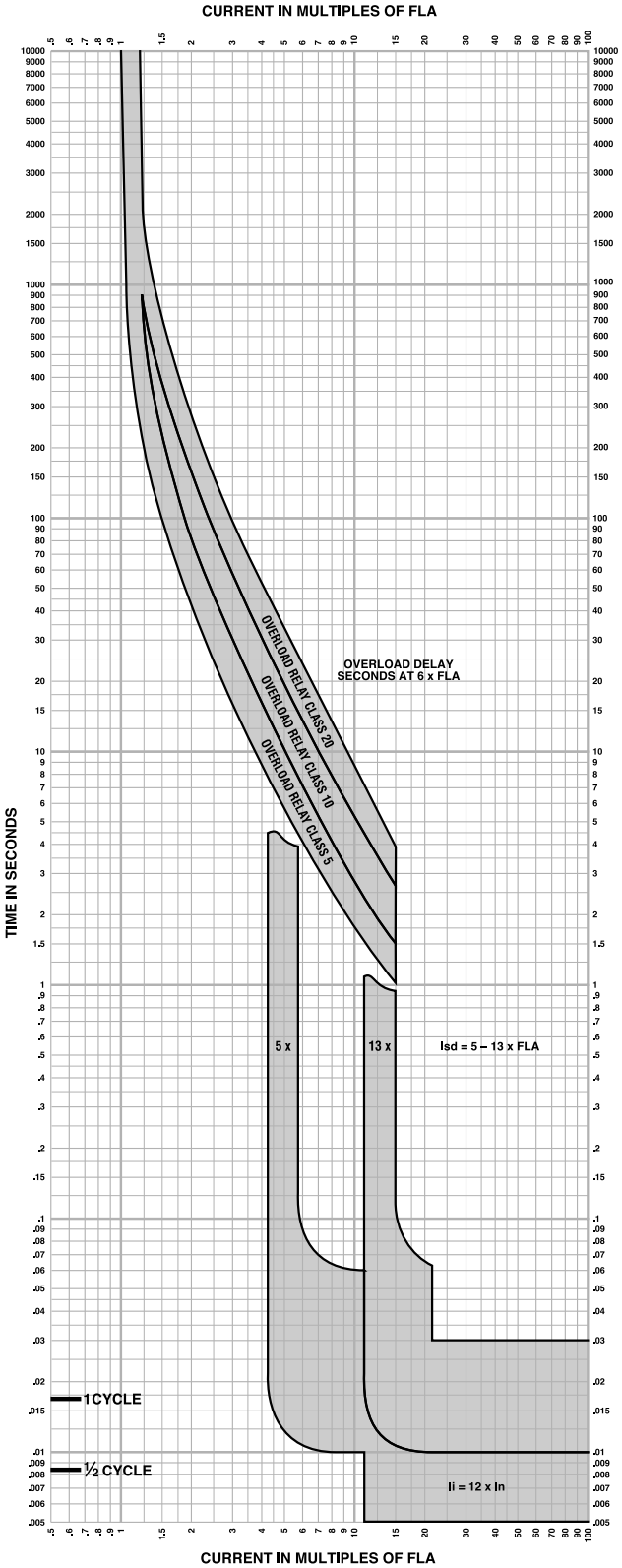

The time-current curve information is to be used for application and coordination purposes only.

Notes:

1. If overload still exists past overload relay delay, motor protection circuit breaker will open 0.4 seconds later.
2. Total clearing times shown include the response times of the trip unit, the circuit breaker opening, and the extinction of the current.
3. Isd minimum and maximum only shown.
4. Ii = 12 x In
   In = 400A, 600A
   Motor protection circuit breaker will trip <30ms at 12 x In

Curves apply from -35ºC to +70ºC (-31ºF to +158ºF) ambient temperature.

Dimensions

GV5PB and GV6PB Motor Protection Circuit Breakers

GV5PB

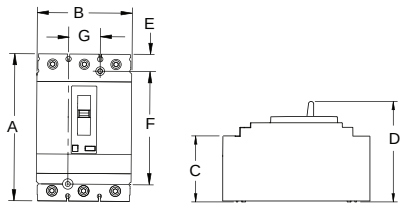

GV6PB

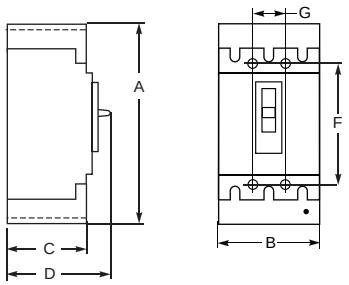

Circuit breaker	Dimensions													
	A		B		C		D		E		F		G	
	in.	mm	in.	mm	in.	mm	in.	mm	in.	mm	in.	mm	in.	mm
GV5PB150	6.40	162.56	4.12	104.65	2.87	72.90	4.36	110.74	0.74	18.80	4.92	124.97	1.38	35.05
GV5PB250	7.52	191.01	4.12	104.65	2.87	72.90	5.00	127	1.30	33.02	4.92	124.97	1.38	35.05
GV6PB	13.38	339.85	5.51	139.95	3.75	95.25	6.61	167.89	2.76	70.00	7.87	199.90	1.77	44.96

GV6PB with Terminal Shield

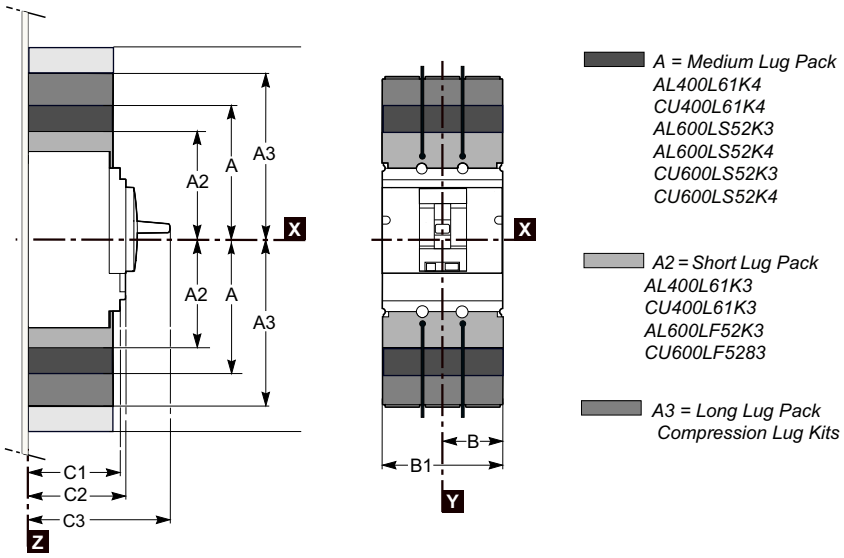

	A	A2	A3	B	B1	C1	C2	C3
in.	6.69	5.65	7.87	2.76	5.51	3.75	4.33	6.61
mm	170	143.5	200	70	140	95.25	110	168

GV5PB/GV6PB Panel Mounting

Panel Mounting GV5PB: in. (mm)

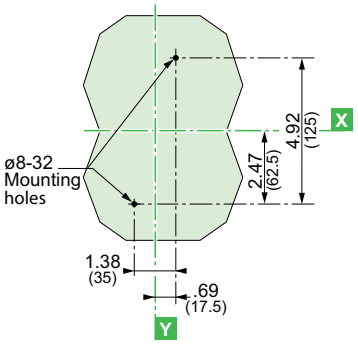

Panel Mounting GV6PB: in. (mm)

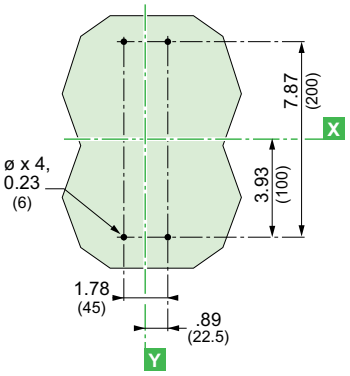

Mounting on Two Mounting Rails, GV5PB only: in. (mm)

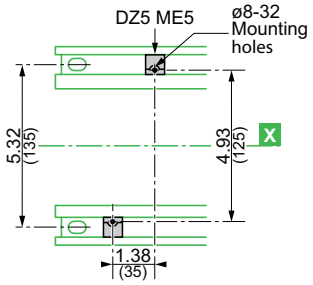

Toggle Handle Door Cutouts

Figure 3 - GV5PB: in. (mm)

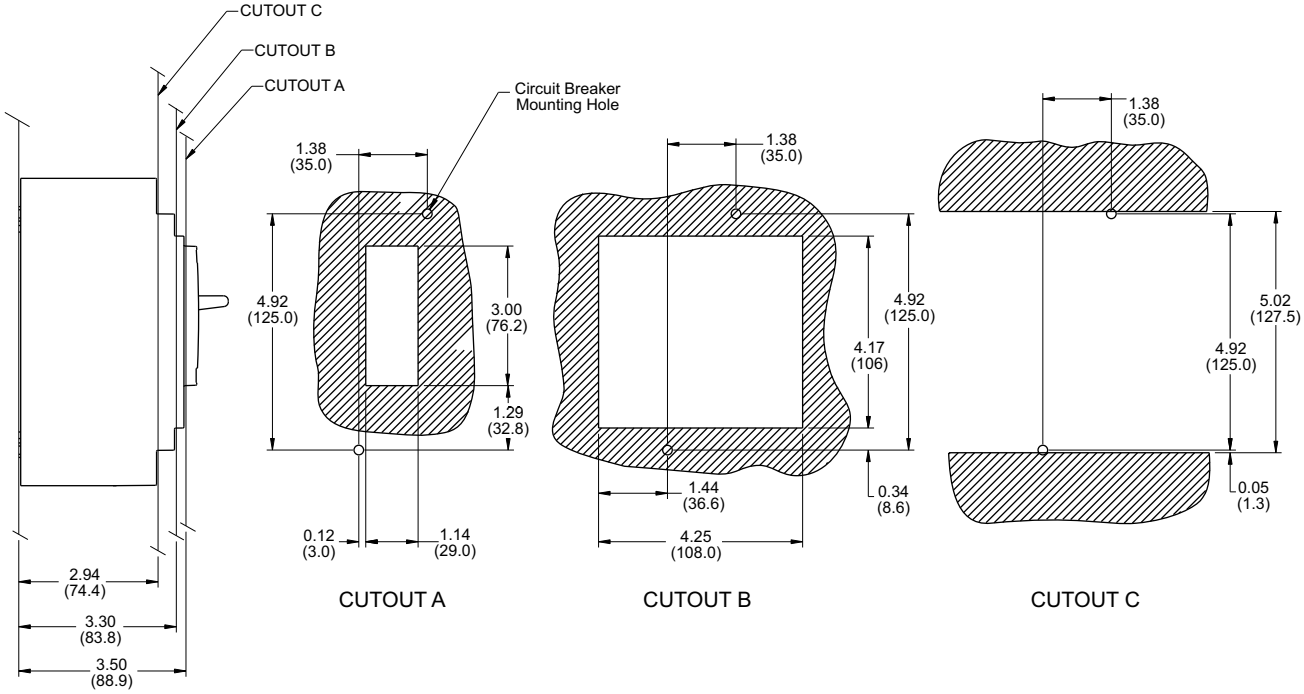

Table 20 - GV6PB: in. (mm)

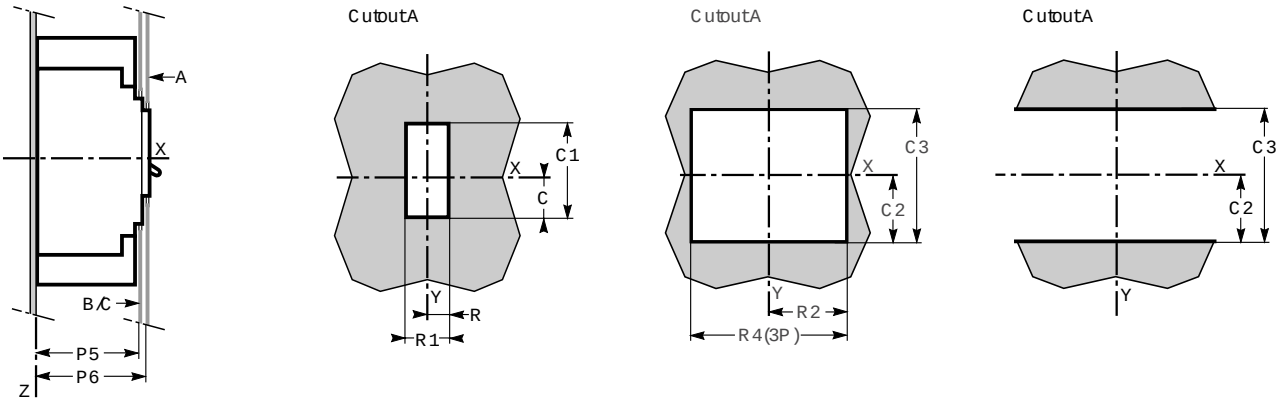

	C	C1	C2	C3	P5	P6	R	R1	R2	R4	Δ
in.	1.63	4.56	3.64	7.24	4.21	4.40	1.24	2.48	2.81	5.62	3.93 + (5 x h)
mm	41.5	116	92.5	184	107	112	31.5	63	71.5	143	100 + (5 x h)

Rotary Handle Door Cutouts

GV5PB with Extended Rotary Handle GV7AP01/GV7AP02: in. (mm)

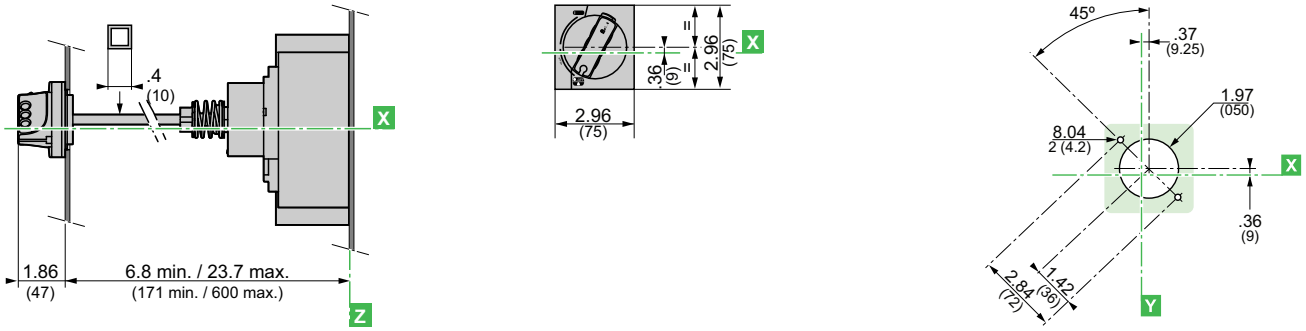

GV6PB with Extended Rotary Handle S32598/S32600: in. (mm)

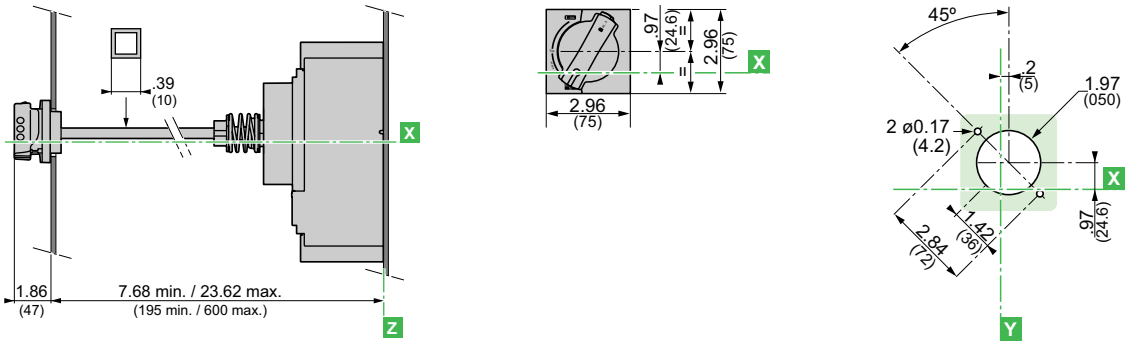

GV5PB/GV6PB with MCC Type Direct Rotary Handle GV7AP05/S32606: in. (mm)

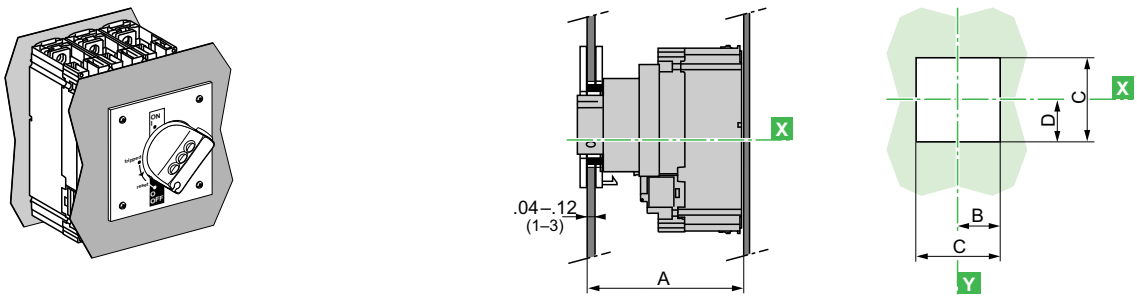

	A		B		C		D	
	in.	mm	in.	mm	in.	mm	in.	mm
GV5PB	5 ±0.07	127 ±1.78	1.97	50.03	3.94	100.08	1.61	40.89
GV6PB	5.8 ±0.07	149 ±1.78	2.95	75	5.71	145.03	2.0	50.8

Minimum Electrical Clearances

GV5PB

Clearances: in. (mm)[7]

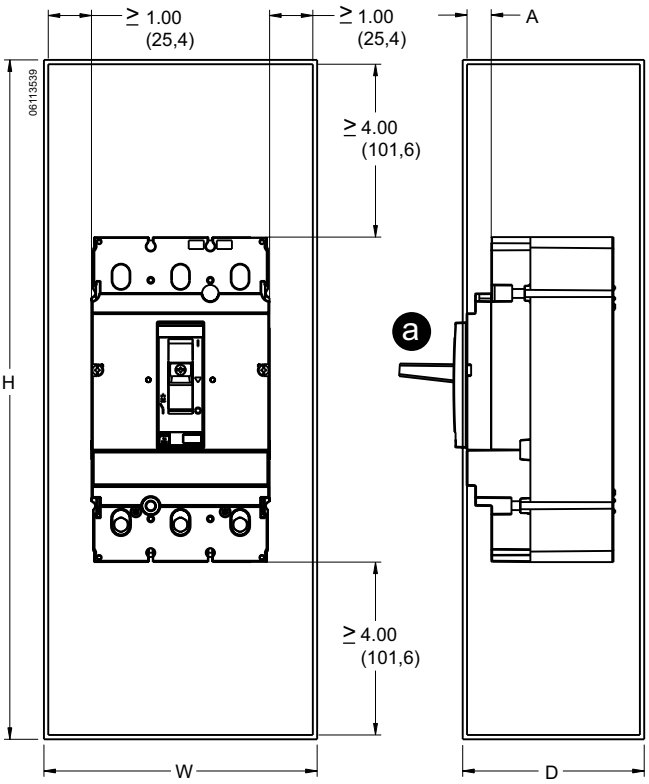

Fiber Insulating Plate: in. (mm)

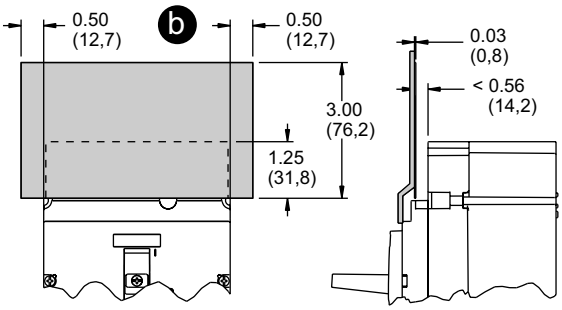

250 A Enclosure Insulation: in. (mm)[8]

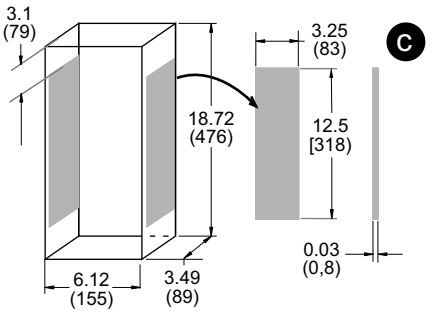

Table 21 - GV5PB Enclosure Dimensions

	H x W x D in. (mm)
150 A	15.6 x 6.12 x 3.49 in. (396 x 155 x 89 mm)
250 A	18.72 x 6.12 x 3.49 (476 x 155 x 89 mm)

7. If dimension “A” is less than 0.56 in. (14.2 mm), attach a fiber insulating plate (not provided) to the enclosure cover.
8. Insulation is required if the circuit breaker side < 4.13 in. (105 mm) from metal.

GV6PB

Clearances: in. (mm)

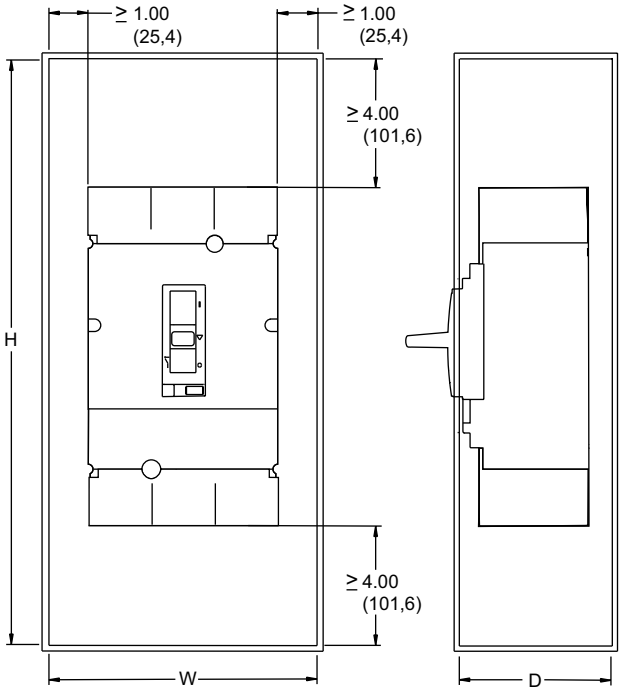

GV6PB Enclosure Dimensions

	H x W x D in (mm)
250–600 A	35.48 x 12.00 x 4.45 in. (901 x 305 x 113 mm)

Schematics

Motor Circuit Breakers	Add-on auxiliary contacts according to their location			
GV5PB/6PB	GV7AE11, GV7AB11			
	Location 1 C/O contact	Location 2 Trip indication	Location 3 Electrical fault indication[9]	Location 4 C/O contact

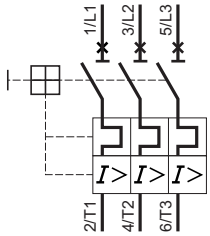

Electric trips		
GV7AU	GV7AS	Thermal fault module S429424

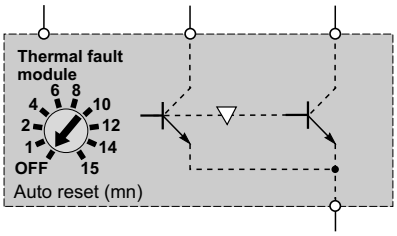

Recommended application schematic for S429424

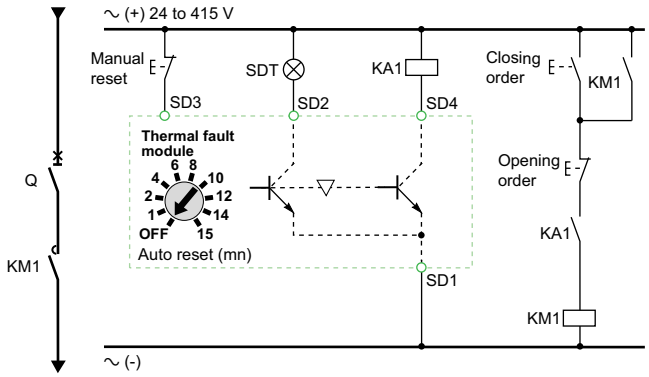

SD1, SD3: thermal fault module input power supply
SD2: overload fault signal output. This output will stay pul until reset.
SD4: contactor control output
SD2 and SD4: static outputs: 24–415 Vac/Vdc; 80 mA maximum
KM1: LC1 D or LC1 F contactor
KA1: CA2 or CAD type control relays
Terminals shown in green must be connected by the customer.

9. Adapter S29451 is mandatory for electrical trip indication in GV5PB.

Printed in:
Schneider Electric

Schneider Electric
800 Federal Street
Andover, Ma 01810
usa

888–778–2733

www.se.com

As standards, specifications, and design change from time to time, please ask for confirmation of the information given in this publication.

© 2019 – 2020 Schneider Electric. All rights reserved.

8536CT1901