Product data sheet

Specifications

gearbox with straight teeth GBX- Ã˜ 160 mm- reduction 15:1- < 10arcmin- 700 N.m

GBX1600151403F

Product availability: Non-Stock - Not normally stocked in distribution facility

Main

Range Compatibility	Lexium 32 Lexium 62 Lexium 52 Lexium 15 Lexium 62 ILM
Product or Component Type	Planetary gearbox
Gear box type	Straight teeth
Device short name	GBX
Gearbox external diameter	6.3 in (160 mm)
Product compatibility	SH3 MH3 ILM
Reduction ratio	20:1

Complementary

Maximum torsional backlash	10 arc.min
Torsional rigidity	41 N.m/arcmin
Housing Colour	Black
Housing material	Black anodized aluminium
Shaft material	C 45
Additional information	Lubricated for life
Service life in hours	30000 h 100 rpm 86 °F (30 °C)
Efficiency	95 %
Mounting position	Any position
Maximum radial force Fr	4200 N 100 rpm, force applied at mid-distance from output shaft during 30000 hour at 30 °C 6000 N 100 rpm, force applied at mid-distance from output shaft during 10000 hour at 30 °C
Maximum axial force Fa	6000 N 100 rpm, during 30000 hour at 30°C 8000 N 100 rpm, during 10000 hour at 30°C
moment of inertia	9.913 kg.cm²
Continuous output torque	6195.5 lbf.in (700 N.m) 100 rpm 86 °F (30 °C)
Maximum output torque	9912.8 lbf.in (1120 N.m) 100 rpm 86 °F (30 °C)
Product Weight	48.5 lb(US) (22 kg)
Compatibility code	GBX
Internal length	6.04 in (153.5 mm)

Price is “List Price” and may be subject to a trade discount – check with your local distributor or retailer for actual price.

Disclaimer: This documentation is not intended as a substitute for and is not to be used for determining suitability or reliability of these products for specific user applications

Environment

Noise level	70 dB 1 m, no-load
IP Degree of Protection	Shaft output IP54
ambient temperature for operation	-13…194 °F (-25…90 °C)

Ordering and shipping details

Category	US1PC5318283
Discount Schedule	PC53
GTIN	3389118145245
Returnability	No
Country of origin	DE

Packing Units

Unit Type of Package 1	PCE
Nbr. of units in pkg.	1
Package 1 Height	10.2 in (26.0 cm)
Package 1 Width	17.7 in (45.0 cm)
Package 1 Length	10.2 in (26.0 cm)
Package weight(Lbs)	50.7 lb(US) (23.0 kg)

Contractual warranty

Warranty (in months)	18

Environmental Data

Schneider Electric aims to achieve Net Zero status by 2050 through supply chain partnerships, lower impact materials, and circularity via our ongoing “Use Better, Use Longer, Use Again” campaign to extend product lifetimes and recyclability.

Environmental Data explained

How we assess product sustainability

Environmental footprint

Total lifecycle Carbon footprint	**3 832 kg CO2 eq.**
Carbon footprint of the manufacturing phase [A1 to A3]	**93 kg CO2 eq.**
Carbon footprint of the distribution phase [A4]	**3 kg CO2 eq.**
Carbon footprint of the installation phase [A5]	**0.1 kg CO2 eq.**
Carbon footprint of the use phase [B2, B3, B4, B6]	**3 734 kg CO2 eq.**
Carbon footprint of the end-of-life phase [C1 to C4]	**2 kg CO2 eq.**

Use Better

Materials and Substances

Packaging made with recycled cardboard	**Yes**
Packaging without single use plastic	**No**
SCIP Number	**7c9e597c-8ccc-4daf-95fb-5d67fc70d561**
EU RoHS Directive	**Compliant By Exemption**
REACh Regulation	**Reference contains Substances of Very High Concern above the threshold**
California proposition 65	**WARNING: This product can expose you to chemicals including: Lead and lead compounds, which is known to the State of California to cause cancer and birth defects or other reproductive harm. For more information go to www.P65Warnings.ca.gov**
PVC free	**Yes**

Use Longer

Lifetime extension

Repair	**No**

Use Again

Repack and remanufacture

Circularity Profile	**No need of specific recycling operations**
Take-back	**No**

Dimensions Drawings

Dimensions

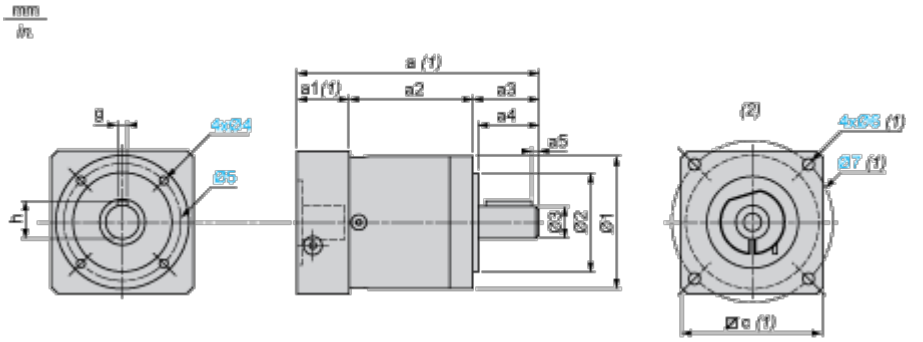

(1) Dimensions a, a1, c, Ø6 and Ø7 depend on the planetary gearbox/servo motor combination

(2) Servo motor assembly

Dimensions in mm

a2	a3	a4	a5	h	g	Ø1	Ø2	Ø3	Ø4 (oblong)	Ø5
153.5	87	80	8	43	12	160	130 h7	40 h7	M12 x 20	145

Dimensions in mm

a	a1	c	Ø6	Ø7
305	64.5	140 x 140	M10	165

Dimensions in in.

a2	a3	a4	a5	h	g	Ø1	Ø2	Ø3	Ø4 oblong	Ø5
6.04	3.42	3.14	0.31	1.69	0.47	6.29	5.12 h7	1.57 h7	M12 x 0.79	5.70

Dimensions in in.

a	a1	c	Ø6	Ø7
12.00	2.53	0.21 x 0.21	M10	6.49