Product data sheet

Specifications

IEC contactor,Easy TeSys DPE,nonreversing,38A,3P,20HP at 480V AC,240V 50/60Hz coil

DPE38U7

Product availability: Stock - Normally stocked in distribution facility

Main

Range	Easy TeSys
Product name	Easy TeSys DPE
Product or Component Type	Contactor
Device short name	DPE
Contactor application	Resistive load Motor control
Utilisation category	AC-3 AC-1 AC-4
Poles description	3P
Pole contact composition	3 NO
Continuous current (Conforming to UL,CSA)	52 A
[Ue] rated operational voltage (Conforming to UL,CSA)	115 V single phase 230...240 V single phase 200...208 V 3-phase 230...240 V 3-phase 460...480 V 3-phase 575...600 V 3-phase
Motor power HP (Conforming to UL,CSA)	2 hp at 115 V AC 50/60 Hz for 1 phase motors 5 hp at 230...240 V AC 50/60 Hz for 1 phase motors 10 hp at 200...208 V AC 50/60 Hz for 3 phase motors 10 hp at 230...240 V AC 50/60 Hz for 3 phase motors 20 hp at 460...480 V AC 50/60 Hz for 3 phase motors 25 hp at 575...600 V AC 50/60 Hz for 3 phase motors
[Ie] rated operational current (conforming to IEC,GB/T)	38 A (at <140 °F (60 °C)) at <= 440 V AC AC-3 for power circuit 50 A (at <140 °F (60 °C)) at <= 440 V AC AC-1 for power circuit
[Ith] conventional free air thermal current (Conforming to IEC,GB/T)	50 A (at 140 °F (60 °C)) for power circuit 10 A (at 140 °F (60 °C)) for signalling circuit
[Ue] rated operational voltage (conforming to IEC,GB/T)	115 V 230/240 V 200/208 V
Motor power kW (conforming to IEC,GB/T)	9 kW 220...230 V AC 50/60 Hz 18.5 kW 380...400 V AC 50/60 Hz 18.5 kW 415 V AC 50/60 Hz 18.5 kW 440 V AC 50/60 Hz 18.5 kW 500 V AC 50/60 Hz 18.5 kW 660...690 V AC 50/60 Hz
Incorporated auxiliary contact	1 NO
[Uc] control circuit voltage	240 V AC 50/60 Hz

Complementary

Price is “List Price” and may be subject to a trade discount – check with your local distributor or retailer for actual price.

Disclaimer: This documentation is not intended as a substitute for and is not to be used for determining suitability or reliability of these products for specific user applications

Associated fuse or circuit breaker (conforming to UL,CSA)	Associated fuse, J fuse, 80 A at 600 V with 100 kA breaking capacity Associated circuit breaker, 60 A at 480 V with 35 kA breaking capacity Associated circuit breaker, 60 A at 600 V with 18 kA breaking capacity
Associated fuse rating (Conforming to IEC,GB/T)	63 A gG at <= 690 V coordination type 1 for power circuit 63 A gG at <= 690 V coordination type 2 for power circuit 10 A gG for signalling circuit
Rated making capacity (Conforming to IEC,GB/T)	140 A AC for signalling circuit 250 A DC for signalling circuit 550 A at 440 V for power circuit
Rated breaking capacity (Conforming to IEC,GB/T)	550 A at 440 V for power circuit
Average impedance per pole (At Ith and 50 Hz, conforming to IEC,GB/T)	2 mOhm
Power dissipation per pole (at operational currents, conforming to IEC,GB/T)	2 W AC-3 5 W AC-1
Electrical durability (Conforming to IEC,GB/T)	1 Mcycles 38 A AC-3 <= 440 V 0.6 Mcycles 52 A AC-1 <= 440 V
Safety reliability level (Conforming to IEC,GB/T)	B10d = 1369863 cycles contactor with nominal load EN/ISO 13849-1 B10d = 20000000 cycles contactor with mechanical load EN/ISO 13849-1
Coil technology	Without built-in suppressor module
Control circuit voltage limits	Operational: 0.8...1.1 Uc at 50 Hz (at <140 °F (60 °C)) Operational: 0.85...1.1 Uc at 60 Hz (at <140 °F (60 °C)) Operational: 1...1.1 Uc at 50/60 Hz (at <158 °F (70 °C)) Drop-out: 0.3...0.6 Uc at 50/60 Hz (at <158 °F (70 °C))
Inrush power in VA	70 VA 60 Hz cos phi 0.75 (at 68 °F (20 °C)) 70 VA 50 Hz cos phi 0.75 (at 68 °F (20 °C))
Hold-in power consumption in VA	7.5 VA 60 Hz cos phi 0.3 (at 68 °F (20 °C)) 7 VA 50 Hz cos phi 0.3 (at 68 °F (20 °C))
Heat dissipation	2…3 W 50/60 Hz
Mechanical durability	10 Mcycles
Maximum operating rate	3600 cyc/h 140 °F (60 °C)
Minimum switching current	5 mA for signalling circuit
Minimum switching voltage	17 V for signalling circuit
Insulation resistance	> 10 MOhm for signalling circuit
Non-overlap time	1.5 ms on de-energisation between NC and NO contact 1.5 ms on energisation between NC and NO contact
Signalling circuit frequency	25...400 Hz

Connections - terminals	Power circuit: screw clamp terminals 1 0.002…0.006 in² (1…4 mm²) - cable stiffness: flexible without cable end Power circuit: screw clamp terminals 2 0.002…0.006 in² (1…4 mm²) - cable stiffness: flexible without cable end Power circuit: screw clamp terminals 1 0.002…0.006 in² (1…4 mm²) - cable stiffness: flexible with cable end Power circuit: screw clamp terminals 2 0.002…0.004 in² (1…2.5 mm²) - cable stiffness: flexible with cable end Power circuit: screw clamp terminals 1 0.002…0.006 in² (1…4 mm²) - cable stiffness: solid without cable end Power circuit: screw clamp terminals 2 0.002…0.006 in² (1…4 mm²) - cable stiffness: solid without cable end Control circuit: screw clamp terminals 1 0.002…0.006 in² (1…4 mm²) - cable stiffness: flexible without cable end Control circuit: screw clamp terminals 2 0.002…0.006 in² (1…4 mm²) - cable stiffness: flexible without cable end Control circuit: screw clamp terminals 1 0.002…0.006 in² (1…4 mm²) - cable stiffness: flexible with cable end Control circuit: screw clamp terminals 2 0.002…0.004 in² (1…2.5 mm²) - cable stiffness: flexible with cable end Control circuit: screw clamp terminals 1 0.002…0.006 in² (1…4 mm²) - cable stiffness: solid without cable end Control circuit: screw clamp terminals 2 0.002…0.006 in² (1…4 mm²) - cable stiffness: solid without cable end
Tightening torque	Control circuit 15.05 lbf.in (1.7 N.m) screw clamp terminals flat Ø 6 mm Control circuit 15.05 lbf.in (1.7 N.m) screw clamp terminals Philips No 2 Power circuit 22.1 lbf.in (2.5 N.m) screw clamp terminals flat Ø 6 mm Power circuit 22.1 lbf.in (2.5 N.m) screw clamp terminals Philips No 2
Mounting Support	Rail Plate
Height	3.3 in (85 mm)
Width	1.8 in (45 mm)
Depth	3.6 in (92 mm)
Product Weight	0.827 lb(US) (0.375 kg)

Environment

Standards	UL 60947-1 UL 60947-4-1 CSA C22.2 No 60947-1 CSA C22.2 No 60947-4-1 EN/IEC 60947-1 EN/IEC 60947-4-1 EN/IEC 60947-5-1 GB/T 14048.1 GB/T 14048.4 GB/T 14048.5
Product Certifications	cULus CB Scheme CE CCC
[Ui] rated insulation voltage (Conforming to UL,CSA)	600 V
Flame resistance (Conforming to UL,CSA)	V1 conforming to UL 94
[Ui] rated insulation voltage (Conforming to IEC,GB/T)	690 V
Overvoltage category (Conforming to IEC,GB/T)	III
Pollution degree (Conforming to IEC,GB/T)	3
[Uimp] rated impulse withstand voltage (Conforming to IEC,GB/T)	6 kV
IP degree of protection (Conforming to IEC,GB/T)	IP20 front face
Protective treatment (Conforming to IEC,GB/T)	TH
Flame resistance (Conforming to IEC,GB/T)	1562 °F (850 °C)

Ambient Air Temperature for Storage	-76…176 °F (-60…80 °C)
Ambient Air Temperature for Operation	-40…140 °F (-40…60 °C)
Operating altitude	0...6561.68 ft (0...2000 m)
Mechanical robustness	Vibrations contactor open 2 Gn, 5...300 Hz) Vibrations contactor closed 4 Gn, 5...300 Hz) Shocks contactor open 10 Gn for 11 ms) Shocks contactor closed 15 Gn for 11 ms)

Ordering and shipping details

Category	US10I1322362
Discount Schedule	0I13
GTIN	3606481063274
Returnability	Yes
Country of origin	ID

Packing Units

Unit Type of Package 1	PCE
Nbr. of units in pkg.	1
Package 1 Height	4.600 in (11.684 cm)
Package 1 Width	2.200 in (5.588 cm)
Package 1 Length	3.700 in (9.398 cm)
Package weight(Lbs)	14.880 oz (421.841 g)
Unit Type of Package 2	CAR
Number of Units in Package 2	16
Package 2 Height	5.800 in (14.732 cm)
Package 2 Width	11.700 in (29.718 cm)
Package 2 Length	15.600 in (39.624 cm)
Package 2 Weight	15.399 lb(US) (6.985 kg)

Contractual warranty

Warranty (in months)	18

Environmental Data

Schneider Electric aims to achieve Net Zero status by 2050 through supply chain partnerships, lower impact materials, and circularity via our ongoing “Use Better, Use Longer, Use Again” campaign to extend product lifetimes and recyclability.

Environmental Data explained >

How we assess product sustainability >

Environmental footprint

Total lifecycle Carbon footprint	**37 kg CO2 eq.**
Carbon footprint of the manufacturing phase [A1 to A3]	**2 kg CO2 eq.**
Carbon footprint of the distribution phase [A4]	**0.2 kg CO2 eq.**
Carbon footprint of the installation phase [A5]	**0.1 kg CO2 eq.**
Carbon footprint of the use phase [B2, B3, B4, B6]	**35 kg CO2 eq.**
Environmental Disclosure	**Product Environmental Profile**

Use Better

Materials and Substances

Packaging made with recycled cardboard	**Yes**
Packaging without single use plastic	**Yes**
EU RoHS Directive	**Compliant**
REACh Regulation	**Free of Substances of Very High Concern above the threshold**
California proposition 65	**WARNING: This product can expose you to chemicals including: Antimony oxide & Antimony trioxide, which is known to the State of California to cause cancer. For more information go to www.P65Warnings.ca.gov**

Use Longer

Lifetime extension

Repair	**No**

Use Again

Repack and remanufacture

Recyclability potential, in %	**66**
Circularity Profile	**End of Life Information**
Take-back	**No**
WEEE Label	**The product must be disposed on European Union markets following specific waste collection and never end up in rubbish bins.**

Image of product / Alternate images
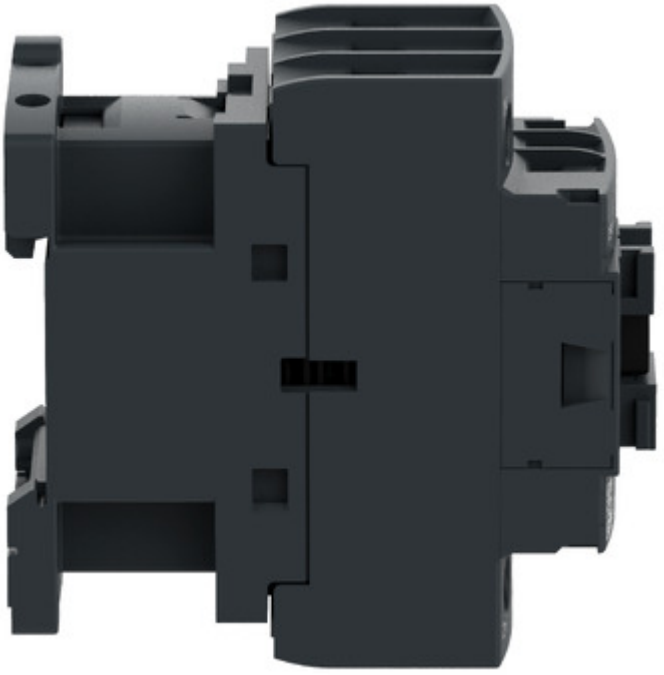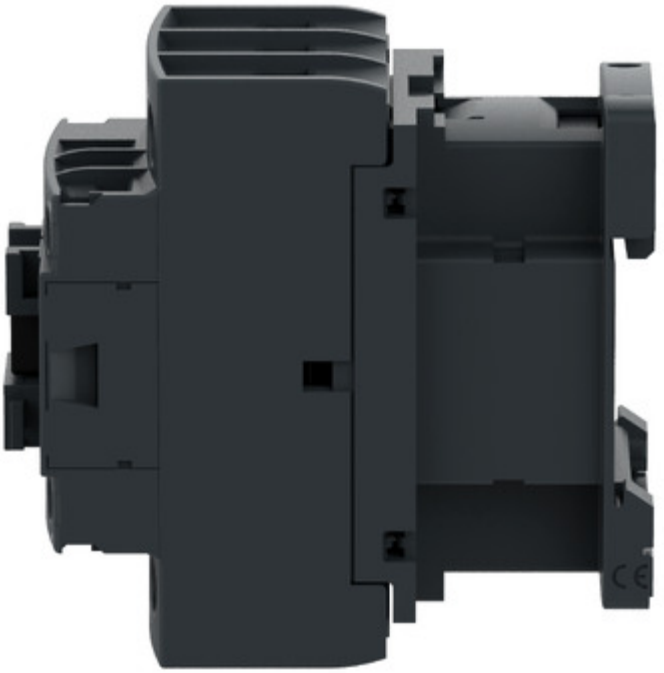
Alternative