# Product data sheet

Specifications

## Discrete input module, Modicon X80, 16 inputs, 48V DC positive, for severe environments

BMXDDI1603H

**Product availability: Stock - Normally stocked in distribution facility**

## Main

| | |
|---|---|
| **Range of Product** | Modicon X80 |
| **Product or Component Type** | Discrete input module |
| **Device Application** | Industrial application in severe environment |
| **Discrete input number** | 16 |
| **Discrete input voltage** | 48 V DCisolated |
| **Discrete input logic** | Positive logic (sink) |

## Complementary

| | |
|---|---|
| **Discrete input number** | 16 isolated conforming to IEC 60947-5-2 at 48 V DC<br>16 isolated conforming to IEC 61131-2 type 3 at 48 V DC |
| **Input wiring mode** | 2 or 3 wires |
| **Discrete input current** | 2.5 mA at 48 V DC |
| **Voltage state 1 guaranteed** | >= 34 V |
| **Voltage state 0 guaranteed** | < 10 V |
| **Current state 1 guaranteed** | >= 2 mA |
| **Current state 0 guaranteed** | <= 0.5 mA |
| **Input impedance** | 19200 Ohm |
| **Paralleling of inputs** | Yes |
| **Insulation resistance** | > 10 MOhm 500 V DC |
| **DC typical response time** | 4 ms |
| **DC maximum response time** | 7 ms |
| **Sensor power supply** | 36…60 V 60 °C<br>42.2…52.8 V 70 °C |
| **Typical current consumption** | 76 mA DC |
| **Current consumption** | <= 107 mA 3.3 V DC |
| **Power dissipation in W** | 3.6 W |
| **Isolation between channels and bus** | 1500 V for 1 minute |
| **Hot swapping fallback** | Yes |
| **MTBF reliability** | 777000 H |
| **Voltage detection threshold** | < 24 V DC sensor fault<br>> 36 V DC sensor OK |

Price is “List Price” and may be subject to a trade discount – check with your local distributor or retailer for actual price.

Disclaimer: This documentation is not intended as a substitute for and is not to be used for determining suitability or reliability of these products for specific user applications

| | |
|---|---|
| **Local signalling** | 1 LED (green) for module operating (RUN)<br>1 LED per channel (green) for channel diagnostic<br>1 LED (red) for module error (ERR)<br>1 LED (red) for module I/O |
| **Height** | 4.08 in (103.7 mm) |
| **Width** | 1.3 in (32 mm) |
| **Depth** | 3.4 in (86 mm) |
| **Product Weight** | 0.254 lb(US) (0.115 kg) |

## Environment

| | |
|---|---|
| **IP Degree of Protection** | IP20 |
| **Protective treatment** | Conformal coating |
| **Marking** | CE<br>UKCA<br>CULus<br>RCM<br>EAC |
| **Product certifications** | ATEX zone 2<br>IECEx zone 2<br>CCC Ex zone 2 (pending)<br>CULus HazLoc |
| **Standards** | IEC 61131-2 |
| **Directives** | 2014/35/EU - low voltage directive<br>2014/30/EU - electromagnetic compatibility |
| **Dielectric strength** | 1500 V AC 50/60 Hz 1 minute, primary/secondary |
| **Ambient air temperature for operation** | -13…158 °F (-25…70 °C) |
| **Ambient air temperature for storage** | -40…185 °F (-40…85 °C) |
| **Relative humidity** | 5…95 % 131 °F (55 °C) without condensation |
| **Operating altitude** | 0...6561.68 ft (0...2000 m)<br>2000...5000 m with derating |
| **Pollution degree** | 2 |
| **Environmental characteristic** | Gas resistant class Gx<br>Gas resistant class 3C4<br>Dust resistant class 3S4<br>Sand resistant class 3S4<br>Salt resistant level 2<br>Mold growth resistant class 3B2<br>Fungal spore resistant class 3B2 |
| **Vibration resistance** | 3 gn |
| **Shock resistance** | 30 gn |

## Ordering and shipping details

| | |
|---|---|
| **Category** | US1PC3418160 |
| **Discount Schedule** | PC34 |
| **GTIN** | 3595864025728 |
| **Returnability** | Yes |
| **Country of origin** | ID |

## Packing Units

| | |
|---|---|
| **Unit Type of Package 1** | PCE |

| | |
|---|---|
| **Nbr. of units in pkg.** | 1 |
| **Package 1 Height** | 1.969 in (5.000 cm) |
| **Package 1 Width** | 4.331 in (11.000 cm) |
| **Package 1 Length** | 4.724 in (12.000 cm) |
| **Package weight(Lbs)** | 5.785 oz (164.000 g) |
| **Unit Type of Package 2** | S02 |
| **Number of Units in Package 2** | 15 |
| **Package 2 Height** | 5.906 in (15.000 cm) |
| **Package 2 Width** | 11.811 in (30.000 cm) |
| **Package 2 Length** | 15.748 in (40.000 cm) |
| **Package 2 Weight** | 6.146 lb(US) (2.788 kg) |

## Contractual warranty

| | |
|---|---|
| **Warranty (in months)** | 18 |

## Environmental Data

Schneider Electric aims to achieve Net Zero status by 2050 through supply chain partnerships, lower impact materials, and circularity via our ongoing “Use Better, Use Longer, Use Again” campaign to extend product lifetimes and recyclability.

Environmental Data explained

How we assess product sustainability

### Environmental footprint

| | |
|---|---|
| Total lifecycle Carbon footprint | **33 kg CO2 eq.** |
| Carbon footprint of the manufacturing phase [A1 to A3] | **20 kg CO2 eq.** |
| Carbon footprint of the distribution phase [A4] | **0 kg CO2 eq.** |
| Carbon footprint of the installation phase [A5] | **0 kg CO2 eq.** |
| Carbon footprint of the use phase [B2, B3, B4, B6] | **13 kg CO2 eq.** |
| Carbon footprint of the end-of-life phase [C1 to C4] | **0.3 kg CO2 eq.** |
| Environmental Disclosure | **Product Environmental Profile** |

## Use Better

### Materials and Substances

| | |
|---|---|
| Packaging made with recycled cardboard | **Yes** |
| Packaging without single use plastic | **Yes** |
| SCIP Number | **43b0fbab-d94b-43e8-be0a-0b39cadd288b** |
| EU RoHS Directive | **Compliant By Exemption** |
| REACh Regulation | **Reference contains Substances of Very High Concern above the threshold** |
| California proposition 65 | **WARNING: This product can expose you to chemicals including: Lead and lead compounds, which is known to the State of California to cause cancer and birth defects or other reproductive harm. For more information go to www.P65Warnings.ca.gov** |

## Use Longer

### Lifetime extension

| | |
|---|---|
| Repair | **No** |

## Use Again

### Repack and remanufacture

| | |
|---|---|
| Recyclability potential, in % | **3** |
| Circularity Profile | **End of Life Information** |
| Take-back | **No** |

## Dimensions Drawings

### Modules Mounted on Racks

#### Dimensions

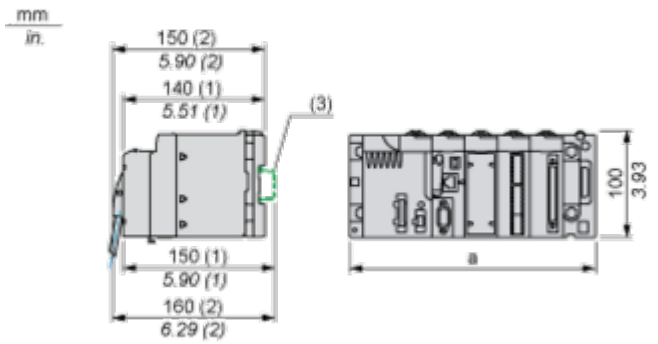


**(1)** With removable terminal block (cage, screw or spring).
**(2)** With FCN connector.
**(3)** On AM1 ED rail: 35 mm wide, 15 mm deep. Only possible with BMXXBP0400/0400H/0600/0600H/0800/0800H rack.

| Rack references | a in mm | a in in. |
|---|---|---|
| BMXXBP0400 and BMXXBP0400H | 242.4 | 09.54 |
| BMXXBP0600 and BMXXBP0600H | 307.6 | 12.11 |
| BMXXBP0800 and BMXXBP0800H | 372.8 | 14.68 |
| BMXXBP1200 and BMXXBP1200H | 503.2 | 19.81 |

Connections and Schema

## Connecting the Module

### Input Circuit Diagram

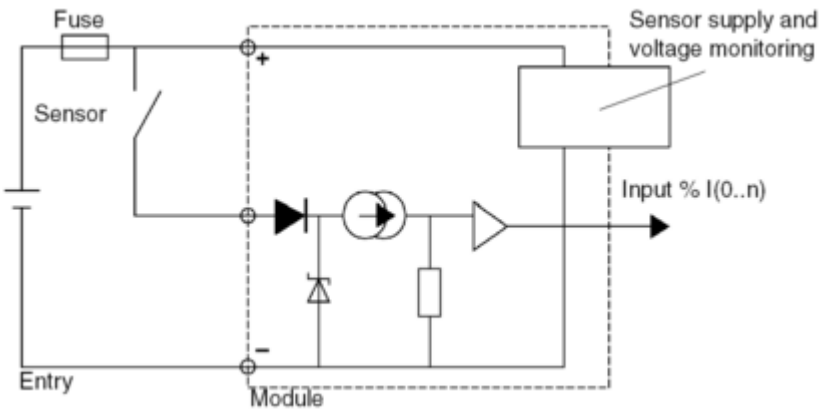


### Module Connection

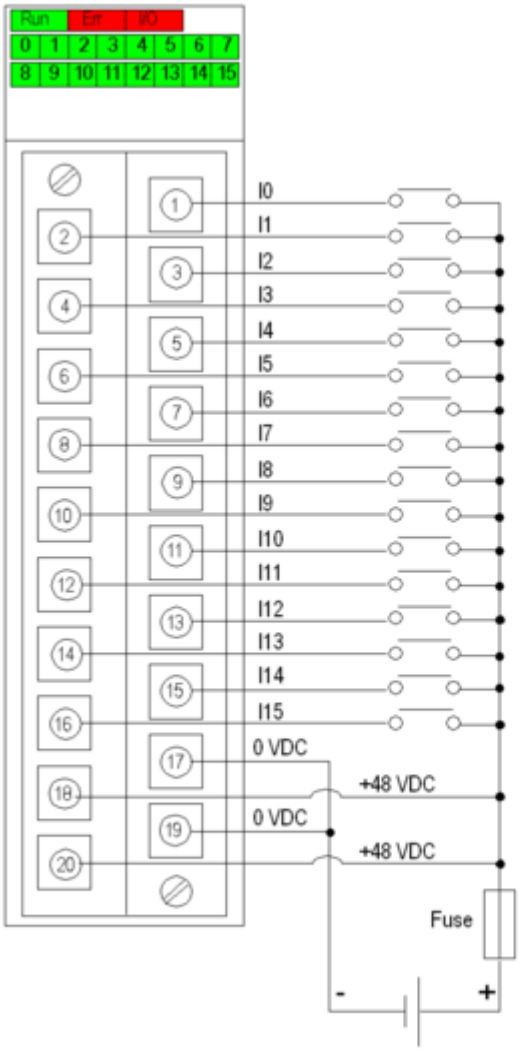

**power supply** 48 VDC
**fuse** fast blow fuse of 0.5 A

Image of product / Alternate images

**Alternative**

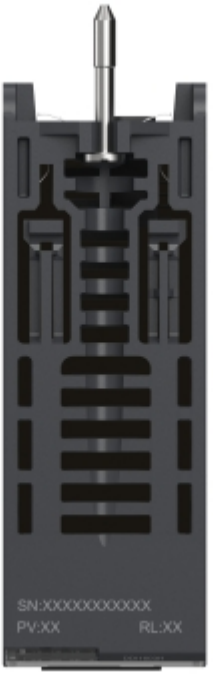

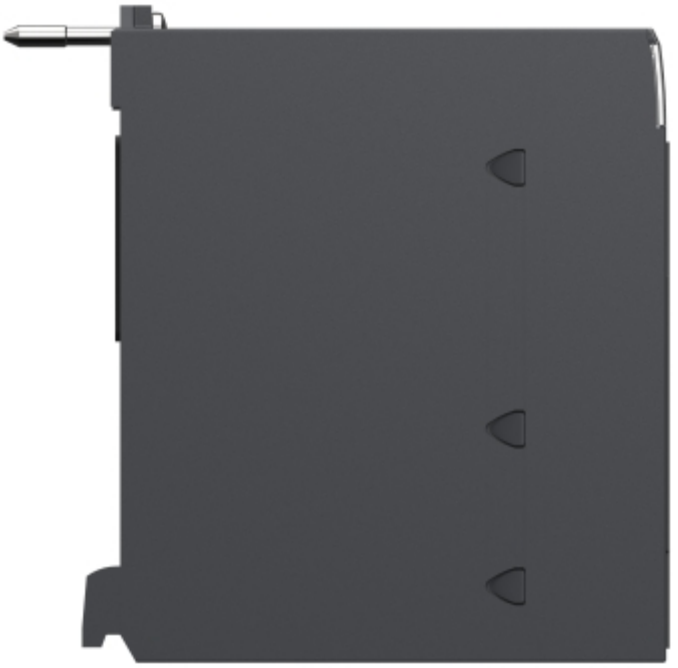

DDI1603H
RUN
ERR
I/O
00 01 02 03 04 05 06 07
08 09 10 11 12 13 14 15
16 17 18 19 20 21 22 23
24 25 26 27 28 29 30 31

Schneider
Electric
Modicon
BMXDDI1603H
DIG 16 IN 48 VDC SINK
DOM : XXXX