Product data sheet

Specifications

redundant safety processor, Modicon M580, 8MB, 61 Ethernet devices, 8 remote IO racks

BMEH582040S

Product availability: Non-Stock - Not normally stocked in distribution facility

Main

Range of Product	Modicon M580
Product or Component Type	Redundant processor module
Impregnation material	Conformal coated

Complementary

Number of racks	1
Application specific I/O	Counter Motion control SSI encoder Accurate time stamping Serial link HART
Checks	Process control Safety control
Control channels	Programmable loops
Integrated connection type	1 Ethernet TCP/IP service port 2 Ethernet TCP/IP device network USB type mini B 1 Ethernet HSBY port
Number of remote I/O station	8 - 2 remote drop
Number of distributed equipment	61
Communication module processor capacity	4.0 Ethernet communication module 16 AS-Interface module
Communication Service	DIO scanner RIO scanner
Memory description	Expandable flash, 4 GB data storage Integrated RAM, 10 kB system memory Integrated RAM, 8 MB program process Integrated RAM, 768 kB data process Integrated RAM, 2 MB program safety Integrated RAM, 512 KB data safety
Application structure	1 master task 1 periodic fast task 1 periodic safe task
Cybersecurity	Achilles certified DoS prevention IPSec SNMP logging Syslog protocol support Audit trail Embedded firewall Firmware signature Password protection Port hardening Security log

Price is “List Price” and may be subject to a trade discount – check with your local distributor or retailer for actual price.

Disclaimer: This documentation is not intended as a substitute for and is not to be used for determining suitability or reliability of these products for specific user applications

Number of instructions per ms	30 Kinst/ms 65 % Boolean + 35 % fixed arithmetic 40 Kinst/ms 100 % Boolean
Current consumption	360 mA 24 V DC
MTBF reliability	638000 H
Marking	CE

Environment

Vibration resistance	3 gn
Shock resistance	15 gn
Ambient Air Temperature for Operation	-13…140 °F (-25…60 °C)
Ambient Air Temperature for Storage	-40…185 °F (-40…85 °C)
Operating altitude	0...6561.68 ft (0...2000 m) 2000...5000 m with derating factor
Relative humidity	5…95 % 131 °F (55 °C) without condensation
IP Degree of Protection	IP20
Directives	2014/30/EU - electromagnetic compatibility 2006/42/EC - machinery 2014/34/EU - ATEX directive
Product certifications	CE UL CSA RCM EAC Merchant Navy ATEX zone 2/22 IECEx zone 2/22 TÜV
Standards	IEC 61131-2 IEC 61010-2-201 UL 61010-2-201 CSA C22.2 No 61010-2-201 IACS E10 EN/IEC 61000-6-5, interface type 1 and type 2 EN/IEC 61850-3, location G IEC 60079-0 EN 50155 EN 50121-3-2 EN 50121-4 EN 50121-5 EN 45545-2 IEC 60571 IEC 62236-3-2 IEC 62234-4 IEC 62234-5
Environmental characteristic	Hazardous location class I division 2 Gas resistant class Gx ISA S71.04 Gas resistant class 3C4 IEC 60721-3-3 Dust resistant class 3S4 IEC 60721-3-3 Sand resistant class 3S4 IEC 60721-3-3 Salt resistant level 2 IEC 68252 Mold growth resistant class 3B2 IEC 60721-3-3 Fungal spore resistant class 3B2 IEC 60721-3-3
Protective treatment	Conformal coating
Safety level	SIL 3 IEC 61508 SIL 3 IEC 61511 SILCL 3 IEC 62061 SILCL 3 ISO 13849-1 category 4 SIL 4 EN 50126 SIL 4 EN 50128 SIL 4 EN 50129
Supply	Internal power supply via rack

Status LED	1 LED (Green) processor running (RUN) 1 LED (Red) processor or system fault (ERR) 1 LED (Red) I/O module fault (I/O) 1 LED (Green) download in progress (DL) 1 LED (Red) memory card or CPU flash fault (BACKUP) 1 LED (green/red) ETH MS (Ethernet port configuration status) 1 LED (green/red) Eth NS (Ethernet network status) 1 LED (Green) peer processor running (REMOTE RUN) 1 LED (Green) processor ID set to A (A) 1 LED (Green) processor ID set to B (B) 1 LED (Green) processor acting as Primary (PRIM) 1 LED (Green) processor acting as Standby (STBY) 1 LED (Red) I/O values overrided by user (FORCED IO) 1 LED (Green) processor in safety mode (SRUN) 1 LED (Green) processor in maintenance mode (SMOD) 1 LED (Green) Hot standby link status (Hsby Diag)
Product Weight	1.872 lb(US) (0.849 kg)

Ordering and shipping details

Category	US1PC3418161
Discount Schedule	PC34
GTIN	3606489562519
Returnability	No
Country of origin	US

Packing Units

Unit Type of Package 1	PCE
Nbr. of units in pkg.	1
Package 1 Height	3.543 in (9.000 cm)
Package 1 Width	7.087 in (18.000 cm)
Package 1 Length	9.843 in (25.000 cm)
Package weight(Lbs)	31.499 oz (893.000 g)
Unit Type of Package 2	S03
Number of Units in Package 2	6
Package 2 Height	11.811 in (30.000 cm)
Package 2 Width	11.811 in (30.000 cm)
Package 2 Length	15.748 in (40.000 cm)
Package 2 Weight	12.906 lb(US) (5.854 kg)

Contractual warranty

Warranty (in months)	18

Environmental Data

Schneider Electric aims to achieve Net Zero status by 2050 through supply chain partnerships, lower impact materials, and circularity via our ongoing “Use Better, Use Longer, Use Again” campaign to extend product lifetimes and recyclability.

Environmental Data explained

How we assess product sustainability

Environmental footprint

Total lifecycle Carbon footprint	**287 kg CO2 eq.**
Carbon footprint of the manufacturing phase [A1 to A3]	**65 kg CO2 eq.**
Carbon footprint of the distribution phase [A4]	**0.1 kg CO2 eq.**
Carbon footprint of the installation phase [A5]	**0 kg CO2 eq.**
Carbon footprint of the use phase [B2, B3, B4, B6]	**221 kg CO2 eq.**
Carbon footprint of the end-of-life phase [C1 to C4]	**0.4 kg CO2 eq.**
Environmental Disclosure	**Product Environmental Profile**

Use Better

Materials and Substances

Packaging made with recycled cardboard	**Yes**
Packaging without single use plastic	**No**
SCIP Number	**4eb70ab0-978b-4773-a441-0cc20d6144a1**
EU RoHS Directive	**Compliant By Exemption**
REACh Regulation	**Reference contains Substances of Very High Concern above the threshold**
California proposition 65	**WARNING: This product can expose you to chemicals including: Lead and lead compounds, which is known to the State of California to cause cancer and birth defects or other reproductive harm. For more information go to www.P65Warnings.ca.gov**

Use Longer

Lifetime extension

Repair	**No**

Use Again

Repack and remanufacture

Circularity Profile	**End of Life Information**
Take-back	**No**

Dimensions Drawings

CPU Module Only

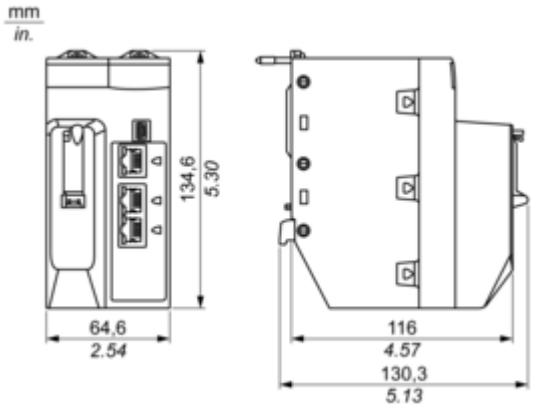

Modules Mounted on Racks

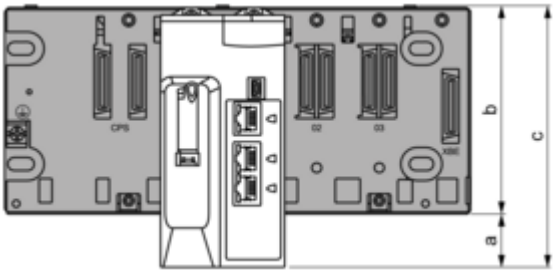

a: additional space below the rack to accommodate the height of the CPU. For an X Bus rack, the value is 30.9 mm (1.217 in.); for an Ethernet rack, the value is 29.49 mm (1.161 in.).
b: the height of the rack. For an X Bus rack, the height is 103.7 mm (4.083 in.); for an Ethernet rack, the height is 105.11 mm (4.138 in.).
c: the height of the main local rack, 134.6 mm (5.299 in.)

Modules and Cables Mounted in an Enclosure

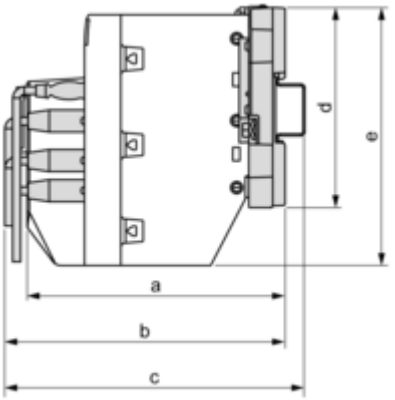

a: enclosure depth: 135 mm (5.315 in.)
b: wiring + module depth: > 146 mm (5.748 in.)
c: wiring + module + DIN rail depth: > 156 mm (6.142 in.)
d: rack height: for an X Bus rack 103.7 mm (4.083 in.); for an Ethernet rack, 105.11 mm (4.138 in.)
e: module height: 134.6 mm (5.299 in.)

Image of product / Alternate images

Alternative

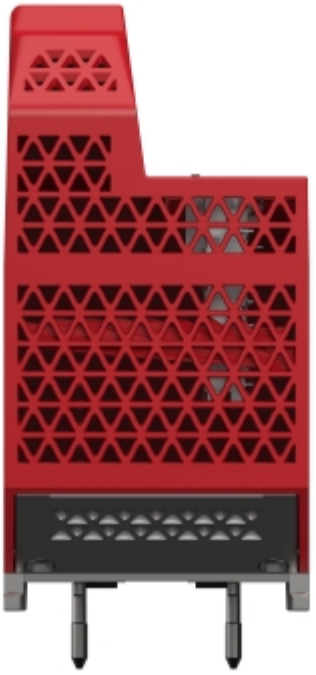

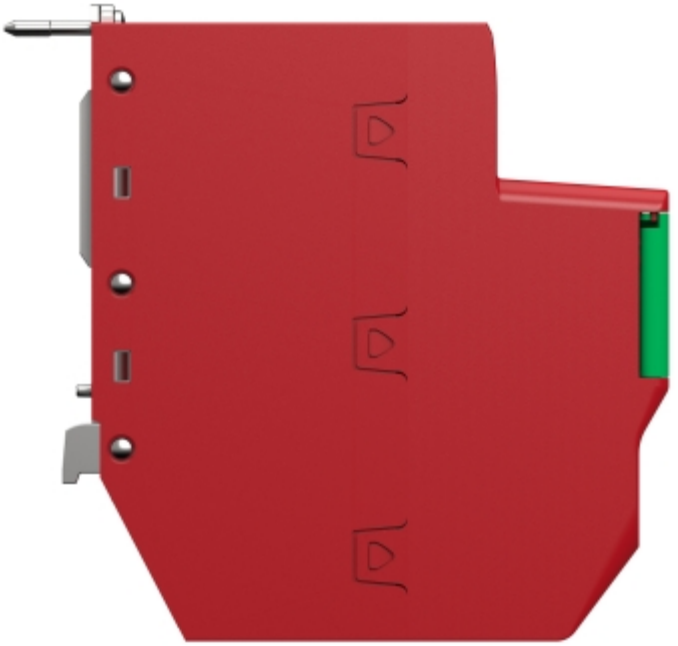

M580
01
Service
02
03
Dual port
Device Network
Hsby Link
Hsby Diag