Product data sheet

Specifications

servo motor BCH, Lexium 28, 100mm, 1000W, 2.4kg.cm², with oil seal, smooth, straight connection

BCH2LH1032CA6C

Product availability: Non-Stock - Not normally stocked in distribution facility

Main

Range of Product	Lexium 28
Range Compatibility	Lexium 28
Product or Component Type	Servo motor
Device short name	BCH2

Complementary

Maximum mechanical speed	5000 rpm
[Us] rated supply voltage	220 V
Phase	Single phase Three phase
Continuous stall current	5.83 A
Continuous stall torque	28.15 lbf.in (3.18 N.m) LXM28 7 A, 220 V, single phase 28.15 lbf.in (3.18 N.m) LXM28 7 A, 220 V, three phase
Continuous power	1000 W
Peak stall torque	84.44 lbf.in (9.54 N.m) LXM28... 7 A, 220 V, single phase 84.44 lbf.in (9.54 N.m) LXM28... 7 A, 220 V, three phase
Nominal output power	1000 W LXM28... 7 A, 220 V, single phase 1000 W LXM28... 7 A, 220 V, three phase
Nominal torque	28.15 lbf.in (3.18 N.m) LXM28... 7 A, 220 V, single phase 28.15 lbf.in (3.18 N.m) LXM28... 7 A, 220 V, three phase
Nominal speed	3000 rpm LXM28... 7 A, 220 V, single phase 3000 rpm LXM28... 7 A, 220 V, three phase
Maximum current Irms	18.9 A LXM28... 1 kW, 220 V
Maximum permanent current	6.64 A
Product compatibility	LXM28... servo drive 1 kW, 220 V, single phase LXM28... servo drive 1 kW, 220 V, three phase
Shaft end	Smooth shaft
Shaft diameter	0.9 in (22 mm)
Shaft length	1.8 in (45 mm)
Feedback type	20 bits single turn absolute encoder
Holding brake	Without
Mounting Support	Asian standard flange
Motor flange size	3.9 in (100 mm)
Electrical connection	Connector MIL
Torque constant	0.55 N.m/A 68 °F (20 °C)

Price is “List Price” and may be subject to a trade discount – check with your local distributor or retailer for actual price.

Disclaimer: This documentation is not intended as a substitute for and is not to be used for determining suitability or reliability of these products for specific user applications

Back emf constant	33 V/krpm 68 °F (20 °C)
Number of motor poles	5.0
Rotor inertia	2.4 kg.cm²
Stator resistance	0.67 Ohm 68 °F (20 °C)
Stator inductance	4.2 mH 68 °F (20 °C)
Stator electrical time constant	6.27 ms 68 °F (20 °C)
Maximum radial force Fr	570 N 3000 rpm
Maximum axial force Fa	200 N
Brake pull-in power	10.4 W
Type of cooling	Natural convection
Length	6.04 in (153.5 mm)
Number of motor stacks	1
Centring collar diameter	3.7 in (95 mm)
Centring collar depth	0.3 in (7 mm)
Number of mounting holes	4
Mounting holes diameter	0.4 in (9.2 mm)
Circle diameter of the mounting holes	4.5 in (115 mm)
Distance shaft shoulder-flange	0.3 in (7 mm)
Product Weight	10.1 lb(US) (4.6 kg)
Sizing reference	BCH2
Network number of phases	1
Accuracy error [angular]	0.044 °
Temperature copper hot	275 °F (135 °C)
Temperature magnet hot	212 °F (100 °C)
Temperature magnet rt	68 °F (20 °C)
Inertia	0.0 kg.cm² of brake 2.39 kg.cm² of motor

Environment

IP Degree of Protection	IP50 IM V3 IP65 IM B5, IM V1
Ambient Air Temperature for Operation	-4…104 °F (-20…40 °C)

Ordering and shipping details

Category	US1PC5318281
Discount Schedule	PC53
GTIN	3606480734007
Returnability	No
Country of origin	CN

Packing Units

Unit Type of Package 1	PCE

Nbr. of units in pkg.	1
Package 1 Height	7.1 in (18.1 cm)
Package 1 Width	9.06 in (23.0 cm)
Package 1 Length	14.2 in (36.0 cm)
Package weight(Lbs)	14.26 lb(US) (6.47 kg)

Contractual warranty

Warranty (in months)	18

Environmental Data

Schneider Electric aims to achieve Net Zero status by 2050 through supply chain partnerships, lower impact materials, and circularity via our ongoing “Use Better, Use Longer, Use Again” campaign to extend product lifetimes and recyclability.

Environmental Data explained

How we assess product sustainability

Environmental footprint

Total lifecycle Carbon footprint	**4 071 kg CO2 eq.**
Carbon footprint of the manufacturing phase [A1 to A3]	**37 kg CO2 eq.**
Carbon footprint of the distribution phase [A4]	**0.8 kg CO2 eq.**
Carbon footprint of the installation phase [A5]	**0 kg CO2 eq.**
Carbon footprint of the use phase [B2, B3, B4, B6]	**4 032 kg CO2 eq.**
Carbon footprint of the end-of-life phase [C1 to C4]	**0.7 kg CO2 eq.**
Environmental Disclosure	**Product Environmental Profile**

Use Better

Materials and Substances

Packaging made with recycled cardboard	**No**
Packaging without single use plastic	**No**
EU RoHS Directive	**Compliant**
REACh Regulation	**Free of Substances of Very High Concern above the threshold**
California proposition 65	**WARNING: This product can expose you to chemicals including: Lead and lead compounds, which is known to the State of California to cause cancer and birth defects or other reproductive harm. For more information go to www.P65Warnings.ca.gov**
PVC free	**Yes**

Use Longer

Lifetime extension

Repair	**No**

Use Again

Repack and remanufacture

Circularity Profile	**End of Life Information**
Take-back	**No**

Dimensions Drawings

Dimensions

Dimensions of Motor

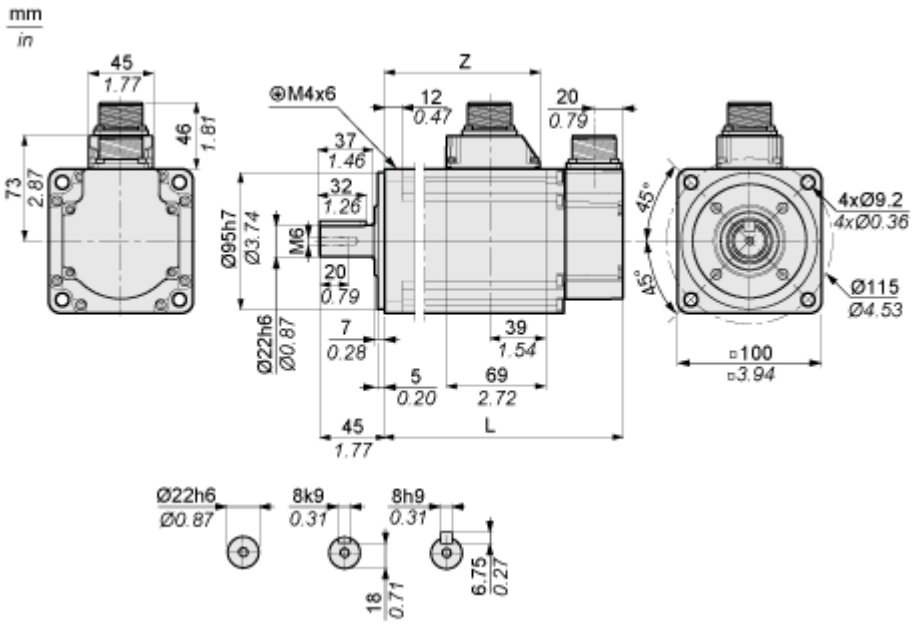

	mm	in.
L (without holding brake)	153.5	6.04
L (with holding brake)	180.5	7.11
Z	96	3.78

Performance Curves

Torque/Speed Curves with 230 V Single/Three Phase Supply Voltage

Servo Motor with LXM28AU10••• Servo Drive

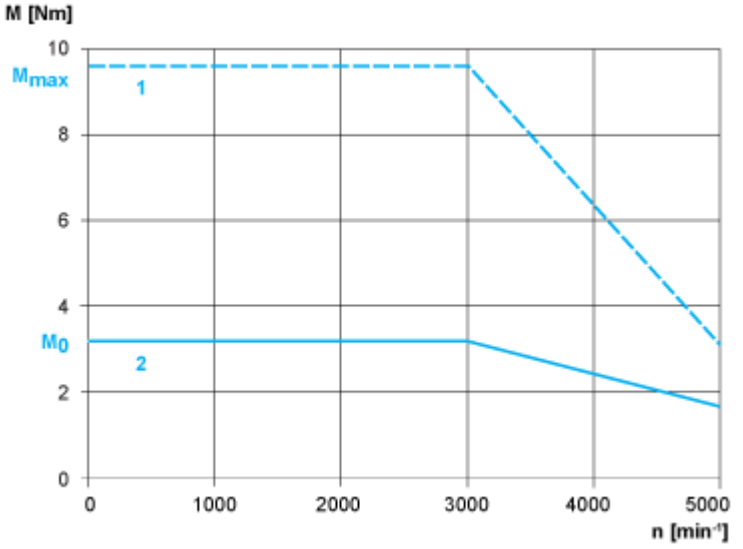

1 : Peak torque

2 : Continuous torque