Altivar Process ATV930 ATV950

Variable Speed Drives for Asynchronous and Synchronous Motors

Installation Manual

NHA80932.11
06/2025

www.se.com

Legal Information

The information provided in this document contains general descriptions, technical characteristics and/or recommendations related to products/solutions.

This document is not intended as a substitute for a detailed study or operational and site-specific development or schematic plan. It is not to be used for determining suitability or reliability of the products/solutions for specific user applications. It is the duty of any such user to perform or have any professional expert of its choice (integrator, specifier or the like) perform the appropriate and comprehensive risk analysis, evaluation and testing of the products/solutions with respect to the relevant specific application or use thereof.

The Schneider Electric brand and any trademarks of Schneider Electric SE and its subsidiaries referred to in this document are the property of Schneider Electric SE or its subsidiaries. All other brands may be trademarks of their respective owner.

This document and its content are protected under applicable copyright laws and provided for informative use only. No part of this document may be reproduced or transmitted in any form or by any means (electronic, mechanical, photocopying, recording, or otherwise), for any purpose, without the prior written permission of Schneider Electric.

Schneider Electric does not grant any right or license for commercial use of the document or its content, except for a non-exclusive and personal license to consult it on an "as is" basis.

Schneider Electric reserves the right to make changes or updates with respect to or in the content of this document or the format thereof, at any time without notice.

To the extent permitted by applicable law, no responsibility or liability is assumed by Schneider Electric and its subsidiaries for any errors or omissions in the informational content of this document, as well as any non-intended use or misuse of the content thereof.

Table of Contents

Safety Information 5
About the document 7
Introduction 16
- Verifying the Absence of Voltage 17
- ATV61/ATV71 to ATV600/ATV900 Migration 19
- Drive Overview 20
- Accessories and Options 31
- Altivar Efficiency Calculator 33
- Steps for setting up the drive 34
- Preliminary Instructions 35

Technical Data 40
- Environment Data 41
  - Temperature Conditions 42
  - Altitude Conditions 43
  - Chemical and Mechanical Conditions 44
- Dimensions and Weights 45
- Electrical Data - Drive Ratings 73
  - Drive Ratings In Normal Duty 74
  - Drive Ratings In Heavy Duty 82
  - Braking Resistors 90
- Electrical Data - Upstream Protective Device 92
  - Upstream Protective Device – Introduction 93
  - Prospective Short-Circuit Current 95
  - IEC Type Circuit-Breaker — with enclosure 99
  - IEC Fuses — with enclosure 103
  - IEC Fuses — wall mounted 107
  - UL Circuit-Breakers and Fuses 111

Drive Mounting 116
- Mounting Conditions 117
- Derating Curves 129
- Mounting Procedures 141

Drive wiring 149
- Wiring Instructions 150
- Specific Wiring Instructions For Wall Mounting Drives 156
- Specific Wiring Instructions For Floor Standing Drives 157
- Dimensioning of Power Part Cables for Floor Standing Drives 159
- Cable Length Instructions 161
- General Wiring Diagrams 163
- Relay Contacts Wiring 168
  - Output Relay with Inductive AC Loads 169
  - Output Relay with Inductive DC loads 170
- Digital Inputs Wiring Depending on Sink / Source Switch Configuration 172
- Pulse Train Output / Digital Output Switch Configuration 175
  - PTO, Pulse Train Output Configuration 176
  - DQ, Digital Output Configuration 177
- Characteristics of the Power Part Terminals 178

Wiring The Power Part 197
Electromagnetic Compatibility 221
Operation on an IT or Corner Grounded System 223
Disconnecting The Built-in EMC Filter 224
Arrangement and Characteristics of Control Block Terminals and Communication and I/O Ports 233
Control Terminals Electrical Data 236
Wiring The Control Part 239
Checking Installation 248
Check List Before Switching On 249
Maintenance 251
Scheduled Servicing 252
Long-term Storage 254
Decommissioning 255
Additional Support 256
Glossary 257

Safety Information

Important Information

Read these instructions carefully, and look at the equipment to become familiar with the device before trying to install, operate, service, or maintain it. The following special messages may appear throughout this documentation or on the equipment to warn of potential hazards or to call attention to information that clarifies or simplifies a procedure.

The addition of this symbol to a “Danger” or “Warning” safety label indicates that an electrical hazard exists which will result in personal injury if the instructions are not followed.

This is the safety alert symbol. It is used to alert you to potential personal injury hazards. Obey all safety messages that follow this symbol to avoid possible injury or death.

⚠ DANGER

DANGER indicates a hazardous situation which, if not avoided, **will result in** death or serious injury.

⚠ WARNING

WARNING indicates a hazardous situation which, if not avoided, **could result in** death or serious injury.

⚠ CAUTION

CAUTION indicates a hazardous situation which, if not avoided, **could result** in minor or moderate injury.

NOTICE

NOTICE is used to address practices not related to physical injury.

Please Note

Electrical equipment should be installed, operated, serviced, and maintained only by qualified personnel. No responsibility is assumed by Schneider Electric for any consequences arising out of the use of this material.

A qualified person is one who has skills and knowledge related to the construction and operation of electrical equipment and its installation, and has received safety training to recognize and avoid the hazards involved.

Qualification of Personnel

Only appropriately trained persons who are familiar with and understand the contents of this manual and all other pertinent product documentation are authorized to work on and with this product. In addition, these persons must have received safety training to recognize and avoid hazards involved. These persons must have sufficient technical training, knowledge and experience and be able to foresee and detect potential hazards that may be caused by using the product, by changing the settings and by the mechanical, electrical and electronic equipment of the entire system in which the product is used. All persons working on and with the product must be fully familiar with all applicable standards, directives, and accident prevention regulations when performing such work.

Intended Use

This product is intended for industrial use according to this manual.

The product may only be used in compliance with all applicable safety standard and local regulations and directives, the specified requirements and the technical data. The product must be installed outside the hazardous ATEX zone. Prior to using the product, you must perform a risk assessment in view of the planned application. Based on the results, the appropriate safety measures must be implemented. Since the product is used as a component in an entire system, you must ensure the safety of persons by means of the design of this entire system (for example, machine design). Any use other than the use explicitly permitted is prohibited and can result in hazards.

About the document

Document Scope

The purpose of this document is:

- to give you mechanical and electrical information related to the Altivar Process drive,
- to show you how to install and wire this drive.

Validity Note

Original instructions and information given in the present document have been written in English (before optional translation).

This documentation is valid for the Altivar Process ATV930, ATV950 drives.

The characteristics of the products described in this document are intended to match the characteristics that are available on www.se.com. As part of our corporate strategy for constant improvement, we may revise the content over time to enhance clarity and accuracy. If you see a difference between the characteristics in this document and the characteristics on www.se.com, consider www.se.com to contain the latest information.

Product Related Information

Read and understand these instructions before performing any procedure with this device.

⚠⚠DANGER

HAZARD OF ELECTRIC SHOCK, EXPLOSION OR ARC FLASH

- Only appropriately trained persons who are familiar with and fully understand the contents of the present manual and all other pertinent product documentation and who have received all necessary training to recognize and avoid hazards involved are authorized to work on and with this device system.
- Installation, adjustment, repair and maintenance must be performed by qualified personnel.
- Verify compliance with all local and national electrical code requirements as well as all other applicable regulations with respect to grounding of all equipment.
- Only use properly rated, electrically insulated tools and measuring equipment.
- Do not touch unshielded components or terminals with voltage present.
- Prior to performing any type of work on the device system, block the motor shaft to prevent rotation.
- Insulate both ends of unused conductors of the motor cable.
- Do not short across the DC bus terminals or the DC bus capacitors or the braking resistor terminals.

Failure to follow these instructions will result in death or serious injury.

⚠⚠DANGER

HAZARD OF ELECTRIC SHOCK, EXPLOSION, OR ARC FLASH

Before performing work on the device system:

- Disconnect all power, including external control power that may be present. Take into account that the circuit breaker or main switch does not de-energize all circuits.
- Place a “Do Not Turn On” label on all power switches related to the device system.
- Lock all power switches in the open position.
- Wait 15 minutes to allow the DC bus capacitors to discharge.
- Verify the absence of voltage. (1)

Before applying voltage to the device system:

- Verify that the work has been completed and that the entire installation cannot cause hazards.
- If the mains input terminals and the motor output terminals have been grounded and short-circuited, remove the ground and the short circuits on the mains input terminals and the motor output terminals.
- Verify proper grounding of all equipment.
- Verify that all protective equipment such as covers, doors, grids is installed and/or closed.

Failure to follow these instructions will result in death or serious injury.

(1) Refer to the Verify the Absence of Voltage section, page 17.

Damaged products or accessories may cause electric shock or unanticipated equipment operation.

⚠⚠DANGER

ELECTRIC SHOCK OR UNANTICIPATED EQUIPMENT OPERATION

Do not use damaged products or accessories.

Failure to follow these instructions will result in death or serious injury.

Contact your local Schneider Electric sales office if you detect any damage whatsoever.

This equipment has been designed to operate outside of any hazardous location. Only install this equipment in zones known to be free of a hazardous atmosphere.

⚠DANGER

POTENTIAL FOR EXPLOSION

Install and use this equipment in non-hazardous locations only.

Failure to follow these instructions will result in death or serious injury.

Your application consists of a whole range of different interrelated mechanical, electrical, and electronic components, the device being just one part of the application. The device by itself is neither intended to nor capable of providing the entire functionality to meet all safety-related requirements that apply to your application. Depending on the application and the corresponding risk assessment to be conducted by you, a whole variety of additional equipment is required such as, but not limited to, external encoders, external brakes, external monitoring devices, guards, etc.As a designer/manufacturer of machines, you must be familiar with and observe all standards that apply to your machine. You must conduct a risk assessment and determine the appropriate Performance Level (PL) and/or Safety Integrity Level (SIL) and design and build your machine in compliance with all applicable standards. In doing so, you must consider the interrelation of all components of the machine. In addition, you must provide instructions for use that enable the user of your machine to perform any type of work on and with the machine such as operation and maintenance in a safe manner.The present document assumes that you are fully aware of all normative standards and requirements that apply to your application. Since the device cannot provide all safety-related functionality for your entire application, you must ensure that the required Performance Level and/or Safety Integrity Level is reached by installing all necessary additional equipment.

⚠ WARNING

INSUFFICIENT PERFORMANCE LEVEL/SAFETY INTEGRITY LEVEL AND/OR UNINTENDED EQUIPMENT OPERATION

- Conduct a risk assessment according to EN ISO 12100 and all other standards that apply to your application.
- Use redundant components and/or control paths for all critical control functions identified in your risk assessment.
- Implement all monitoring functions required to avoid any type of hazard identified in your risk assessment, for example, slipping or falling loads, in particular, if you do not operate the drive in closed loop mode which provides certain internal monitoring functions such as `BRH3` **[BRH b3]**, `BRH4` **[BRH b4]** and `BRH5` **[BRH b5]**.
- Verify that the service life of all individual components used in your application is sufficient for the intended service life of your overall application.
- Perform extensive commissioning tests for all potential error situations to verify the effectiveness of the safety-related functions and monitoring functions implemented, for example, but not limited to, speed monitoring by means of encoders, short circuit monitoring for all connected equipment, correct operation of brakes and guards.
- Perform extensive commissioning tests for all potential error situations to verify that the load can be brought to a safe stop under all conditions.

Failure to follow these instructions can result in death, serious injury, or equipment damage.

A specific application note NHA80973 is available on hoisting machines and can be downloaded on se.com.

Product may perform unexpected movements because of incorrect wiring, incorrect settings, incorrect data or other errors.

⚠ WARNING

UNANTICIPATED EQUIPMENT OPERATION

- Carefully install the wiring in accordance with the EMC requirements.
- Do not operate the product with unknown or unsuitable settings or data.
- Perform a comprehensive commissioning test.

Failure to follow these instructions can result in death, serious injury, or equipment damage.

⚠ WARNING

LOSS OF CONTROL

- The designer of any control scheme must consider the potential failure modes of control paths and, for critical control functions, provide a means to achieve a safe state during and after a path failure. Examples of critical control functions are emergency stop, overtravel stop, power outage and restart.
- Separate or redundant control paths must be provided for critical control functions.
- System control paths may include communication links. Consideration must be given to the implications of unanticipated transmission delays or failures of the link.
- Observe all accident prevention regulations and local safety guidelines (1).
- Each implementation of the product must be individually and thoroughly tested for proper operation before being placed into service.

Failure to follow these instructions can result in death, serious injury, or equipment damage.

(1) For USA: Additional information, refer to NEMA ICS 1.1 (latest edition), Safety Guidelines for the Application, Installation, and Maintenance of Solid State Control and to NEMA ICS 7.1 (latest edition), Safety Standards for Construction and Guide for Selection, Installation and Operation of Adjustable-Speed Drive Systems.

The temperature of the products described in this manual may exceed 80 °C (176 ° F) during operation.

⚠ WARNING

HOT SURFACES

- Ensure that any contact with hot surfaces is avoided.
- Do not allow flammable or heat-sensitive parts in the immediate vicinity of hot surfaces.
- Verify that the product has sufficiently cooled down before handling it.
- Verify that the heat dissipation is sufficient by performing a test run under maximum load conditions.

Failure to follow these instructions can result in death, serious injury, or equipment damage.

NOTICE

DESTRUCTION DUE TO INCORRECT MAINS VOLTAGE

Before switching on and configuring the product, verify that it is approved for the mains voltage.

Failure to follow these instructions can result in equipment damage.

General Cybersecurity Information

In recent years, the growing number of networked machines and production plants has seen a corresponding increase in the potential for cyber threats, such as unauthorized access, data breaches, and operational disruptions. You must, therefore, consider all possible cybersecurity measures to help protect assets and systems against such threats.

To help keep your Schneider Electric products secure and protected, it is in your best interest to implement the cybersecurity best practices as described in the Cybersecurity Best Practices document.

Schneider Electric provides additional information and assistance:

- Subscribe to the Schneider Electric security newsletter.
- Visit the Cybersecurity Support Portal web page to:
  - Find Security Notifications.
  - Report vulnerabilities and incidents.
- Visit the Schneider Electric Cybersecurity and Data Protection Posture web page to:
  - Access the cybersecurity posture.
  - Learn more about cybersecurity in the cybersecurity academy.
  - Explore the cybersecurity services from Schneider Electric.

Environmental Data

The Environmental Data Program is a framework for how we measure, categorize, and compare the environmental attributes and footprint of our products.

Using a rigorous, fact-based methodology, the program provides environmental data from across the product lifecycle.

Five data categories across the product lifecycle

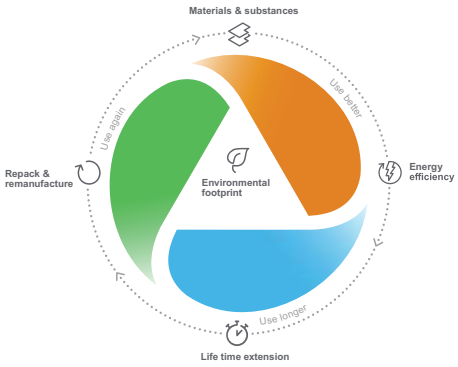

Use Better: How sustainable a product is, including environmental footprint, materials and substances, packaging, and energy efficiency.

Use Longer: How a product's life time can be effectively extended in terms of repairability and updatability.

Use Again: How a product can be reused, from dismantling and remanufacturing to recyclability and manufacturer take back.

With this transparent, verified data, customers and partners are empowered to make conscious environmental choices and accurately evaluate and report on sustainability performance.

All our hardware offers have an associated environmental data available on se.com product pages.

Refer to Environmental Data Program for more information.

Related Documents

Use your tablet or your PC to quickly access detailed and comprehensive information on all our products on www.se.com.

The internet site provides the information you need for products and solutions:

- The whole catalog for detailed characteristics and selection guides,
- The CAD files to help design your installation, available in over 20 different file formats,
- All software and firmware to maintain your installation up to date,

- A large quantity of White Papers, Environment documents, Application solutions, Specifications... to gain a better understanding of our electrical systems and equipment or automation,
- And finally all the User Guides related to your drive, listed below:

Title of Documentation	Reference number	
Catalog: Variable speed drives Altivar Process ATV900	DIA2ED2150601EN (English)	DIA2ED2150601FR (French)
ATV930, ATV950 Getting Started	NHA61578 (English) NHA61579 (French) NHA61580 (German) NHA61581 (Spanish)	NHA61724 (Italian) NHA61582 (Chinese) NHA61578PT (Portuguese) NHA61578TR (Turkish)
ATV900 Getting Started Annex (SCCR)	NHA61583 (English)	
Video: Getting Started with Altivar Process ATV900	FAQ000240081 FAQ (English) 	
ATV930, ATV950 Installation manual	NHA80932 (English) NHA80933 (French) NHA80934 (German) NHA80935 (Spanish)	NHA80936 (Italian) NHA80937 (Chinese) NHA80932PT (Portuguese) NHA80932TR (Turkish)
ATV900 Programming manual	NHA80757 (English) NHA80758 (French) NHA80759 (German) NHA80760 (Spanish)	NHA80761 (Italian) NHA80762 (Chinese) NHA80757PT (Portuguese) NHA80757TR (Turkish)
ATV900 Embedded Modbus Serial Link manual	NHA80939 (English)	
ATV900 Embedded Ethernet manual	NHA80940 (English)	
ATV900 PROFIBUS DP manual (VW3A3607)	NHA80941 (English)	
ATV900 DeviceNet manual (VW3A3609)	NHA80942 (English)	
ATV900 PROFINET manual (VW3A3627)	NHA80943 (English)	
ATV900 CANopen manual (VW3A3608, 618, 628)	NHA80945 (English)	
ATV900 EtherCAT manual (VW3A3601)	NHA80946 (English)	
ATV900 POWERLINK manual (VW3A3619)	PHA99693 (English)	
ATV900 Communication Parameters addresses	NHA80944 (English)	
ATV900 DC Bus Sharing Technical Note PHA25028	PHA25028 (English)	
ATV900 Embedded Safety Function manual	NHA80947 (English)	
ATV900 Safety functions manual with Module VW3A3802	NVE64209 (English) NVE64210 (French) NVE64211 (German) NVE64212 (Spanish)	NVE64213 (Italian) NVE64214 (Chinese) NVE64209PT (Portuguese) NVE64209TR (Turkish)
ATV900 Braking unit for Frame Size 6 manual (MFR66979)	MFR66979 (English)	
ATV900 Braking unit for Frame Size 7 manual (VW3A7101)	1757084 (English)	
Drive Systems ATV960 handbook	NHA37115 (English)	NHA37114 (German)
Drive Systems ATV980 handbook	NHA37117 (English)	NHA37116 (German)
Drive Systems ATV990 handbook Multidrive Systems	NHA37145 (English)	NHA37143 (German)

Title of Documentation	Reference number	
Drive Systems Installation manual	NHA37119 (English) NHA37118 (German) NHA37121 (French) NHA37122 (Spanish) NHA37123 (Italian)	NHA37124 (Dutch) NHA37126 (Polish) NHA37127 (Portuguese) NHA37129 (Turkish) NHA37130 (Chinese)
Altivar Application Note for Hoisting	NHA80973 (English)	
ATV600F, ATV900F Installation Instruction sheet	NVE57369 (English)	
ATV600, ATV900 ATEX manual	NVE42416 (English)	
ATV61-71 to ATV600-900 Migration Manual	EAV64336 (English)	
SoMove: FDT	SoMove_FDT (English, French, German, Spanish, Italian, Chinese)	
ATV900: DTM	ATV9xx_DTM_Library_EN (English - to be installed first) ATV9xx_DTM_Lang_FR (French) ATV9xx_DTM_Lang_DE (German)	ATV9xx_DTM_Lang_SP (Spanish) ATV9xx_DTM_Lang_IT (Italian) ATV9xx_DTM_Lang_CN (Chinese)
Recommended Cybersecurity Best Practices	CS-Best-Practices-2019-340 (English)	
EcoStruxure Automation Device Maintenance	EcoStruxure Automation Device Maintenance (English)	
EcoStruxure Automation Device Maintenance - Altivar User Manual	JYT50472 (English) JYT50482 (German) JYT50474 (French) JYT50476 (Spanish) JYT50478 (Italian)	JYT50485 (Portuguese) JYT50484 (Turkish) JYT50483 (Chinese)

To find documents online, visit the Schneider Electric download center (www.se.com/ww/en/download/).

Information on Non-Inclusive or Insensitive Terminology

As a responsible, inclusive company, Schneider Electric is constantly updating its communications and products that contain non-inclusive or insensitive terminology. However, despite these efforts, our content may still contain terms that are deemed inappropriate by some customers.

Electronic product data sheet

Scan the QR code in front of the drive to get the product data sheet.

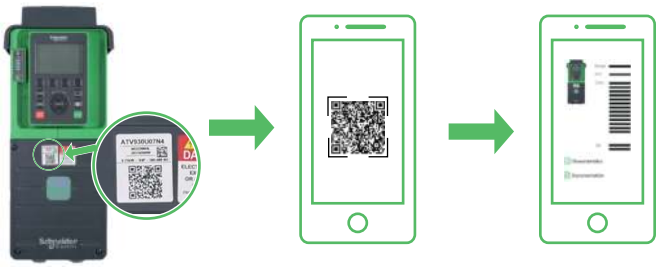

Terminology used in this document

The technical terms, terminology, and the corresponding descriptions in this manual normally use the terms or definitions in the relevant standards.

Among others, these standards include:

- ISO 13849: The Foundation of Functional Safety in the Machinery
- IEC 60204-1: Safety of machinery - Electrical equipment of machines – Part 1: General requirements.
- IEC 61010: Safety requirements for electrical equipment for measurement, control, and laboratory use.
- IEC 61158 series: Industrial communication networks - Fieldbus specifications
- IEC 61508 Ed.2 series: Functional safety of electrical/electronic/ programmable electronic safety-related.
- IEC 61784 series: Industrial communication networks - Profiles.
- IEC 61784-5-3: Industrial communication networks - Profiles - Part 5-3: Installation of fieldbuses - Installation profiles for CPF 3
- IEC 61800 series: Adjustable speed electrical power drive systems.
- IEC 61918: Industrial communication networks - Installation of communication networks in industrial premises.
- IEC 62443: Security for industrial automation and control systems.

In the area of drive systems this includes, but is not limited to, terms such as **error, error message, failure, fault, fault reset, protection, safe state, safety function, warning, warning message**, and so on.

In addition, the term **zone of operation** is used in conjunction with the description of specific hazards, and is defined as it is for a **hazard zone** or **danger zone** in the EC Machinery Directive (2006/42/EC) and in ISO 12100-1.

Contact us

Select your country on www.se.com/contact.

Schneider Electric Industries SAS

Head Office

35, rue Joseph Monier

92500 Rueil-Malmaison

France

Introduction

What's in This Part

Verifying the Absence of Voltage 17
ATV61/ATV71 to ATV600/ATV900 Migration 19
Drive Overview 20
Accessories and Options 31
Altivar Efficiency Calculator 33
Steps for setting up the drive 34
Preliminary Instructions 35

Verifying the Absence of Voltage

Instructions

The DC bus voltage level is determined by measuring the voltage between the DC bus terminals PA/+ and PC/-.

The location of the DC bus terminals depends on the drive model.

Identify your drive model by referring to the nameplate of the drive.

Then, refer to the chapter Wiring The Power Part, page 197 for the location of the DC bus terminals PA/+ and PC/-.

Read and understand these instructions before performing any procedure with this device.

⚠⚠DANGER

HAZARD OF ELECTRIC SHOCK, EXPLOSION OR ARC FLASH

- Only appropriately trained persons who are familiar with and fully understand the contents of the present manual and all other pertinent product documentation and who have received all necessary training to recognize and avoid hazards involved are authorized to work on and with this device system.
- Installation, adjustment, repair and maintenance must be performed by qualified personnel.
- Verify compliance with all local and national electrical code requirements as well as all other applicable regulations with respect to grounding of all equipment.
- Only use properly rated, electrically insulated tools and measuring equipment.
- Do not touch unshielded components or terminals with voltage present.
- Prior to performing any type of work on the device system, block the motor shaft to prevent rotation.
- Insulate both ends of unused conductors of the motor cable.
- Do not short across the DC bus terminals or the DC bus capacitors or the braking resistor terminals.

Failure to follow these instructions will result in death or serious injury.

⚠⚠DANGER

HAZARD OF ELECTRIC SHOCK, EXPLOSION, OR ARC FLASH

Before performing work on the device system:

- Disconnect all power, including external control power that may be present. Take into account that the circuit breaker or main switch does not de-energize all circuits.
- Place a “Do Not Turn On” label on all power switches related to the device system.
- Lock all power switches in the open position.
- Wait 15 minutes to allow the DC bus capacitors to discharge.
- Verify the absence of voltage. (1)

Before applying voltage to the device system:

- Verify that the work has been completed and that the entire installation cannot cause hazards.
- If the mains input terminals and the motor output terminals have been grounded and short-circuited, remove the ground and the short circuits on the mains input terminals and the motor output terminals.
- Verify proper grounding of all equipment.
- Verify that all protective equipment such as covers, doors, grids is installed and/or closed.

Failure to follow these instructions will result in death or serious injury.

(1) Refer to the procedure in the present document, page 18.

Procedure

Perform the following actions to verify the absence of voltage

Step	Action
1	Measure the voltage on the DC bus between the DC bus terminals (PA/+ and PC/-) using a properly rated voltmeter to verify that the voltage is less than 42 Vdc
2	If the DC bus capacitors do not discharge properly, contact your local Schneider Electric representative. Do not repair or operate the product.
3	Verify that no other voltage is present in the drive system.

ATV61/ATV71 to ATV600/ATV900 Migration

Download the Manual

The ATV61-71 to ATV600-900 Migration Manual is now available EAV64336 (English). It provides information about:

- migration from ATV61 to ATV630 or ATV650,
- migration from ATV71 to ATV930 or ATV950.

This information ranges from product selection according to the existing installation, technical differences between the product ranges, product frame size, wiring information or available options.

Drive Overview

Frame Sizes for IP20/IP21 Products - Wall Mounting

10 frame sizes for IP21 products.

Frame size 1	Frame size 2
• 3-phase 200...240 V, 0.75...4 kW, 1...5 HP • 3-phase 380...480 V, 0.75...5.5 kW, 1...7 1/2 HP	• 3-phase 200...240 V, 5.5 kW, 7 1/2 HP • 3-phase 380...480 V, 7.5...11 kW, 10...15 HP • 3-phase 600 V, 3...20 HP
ATV930U07M3...U40M3, ATV930U07N4...U55N4	ATV930U55M3, ATV930U75N4, ATV930D11N4, ATV930U22S6X... ATV930D15S6X

Frame size 3	Frame size 3S
• 3-phase 200...240 V, 7.5 kW 10 HP, 11 kW 15 HP • 3-phase 380...480 V, 15...22 kW, 20...30 HP	• 3-phase 600 V, 25...30 HP
ATV930U75M3, ATV930D11M3, ATV930D15N4...D22N4	ATV930D18S6, ATV930D22S6

Frame size 4	Frame size 5	Frame size 5S
• 3-phase 200...240 V 15...22 kW, 20...30 HP • 3-phase 380...480 V, 30...45 kW, 40...60 HP	• 3-phase 200...240 V, 30...45 kW, 40...60 HP • 3-phase 380...480 V, 55...90 kW, 75...125 HP	• 3-phase 600 V, 40...100 HP
ATV930D15M3...ATV930D22M3, ATV930D30N4...ATV930D45N4	ATV930D30M3...D45M3, ATV930D55N4...D90N4, ATV930D30M3C...D45M3C, ATV930D55N4C...D90N4C The suffix C indicates a drive without braking chopper.	ATV930D30S6...D75S6

Frame size 6	
• 3-phase 200...240 V, 55...75 kW, 75...100 HP • 3-phase 380...480 V, 110...160 kW, 150...250 HP	
 The picture shows a product equipped with the VW3A9704 optional metal conduit box.	
ATV930D55M3C, ATV930D75M3C, ATV930C11N4C...C16N4C	ATV930C11N4...C16N4
The suffix C indicates a drive without braking chopper. Braking modules are available as an external option for Frame size 6 drives, see www.se.com	These drives are supplied with a braking module to be mounted by the customer. Please refer to the dedicated installation manual of the braking module MFR66979.

Frame size 7A	Frame size 7B
• 3-phase 380...480 V, 220 kW, 350 HP	• 3-phase 380...480 V, 250 and 315 kW, 400 and 500 HP
ATV930C22N4, ATV930C22N4C (1)	ATV930C25N4C, ATV930C31N4C
(1) The suffix C indicates a drive without braking chopper.	The suffix C indicates a drive without braking chopper. Braking modules are available as an external option for Frame size 7B drives, see www.se.com.

Products intended to Cabinet Integration – Open Type

3 frame sizes of IP20 products

Frame size 1	Frame size 2	Frame size 3
• 3-phase 380...480 V, 0.75...5.5 kW, 1...7$^{1/2}$ HP	• 3-phase 380...480 V, 7.5...11 kW, 10...15 HP	• 3-phase 380...480 V, 15...22 kW, 20...30 HP
ATV930U07N4Z...U55N4Z	ATV930U75N4Z...D11N4Z	ATV930D15N4Z...D22N4Z

2 frame sizes IP20 on upper part and IP00 on lower part

Frame size 4	Frame size 5
• 3-phase 380...480 V, 30...45 kW, 40...60 HP	• 3-phase 380...480 V, 55...90 kW, 75...125 HP
ATV930D30N4...D45N4Z	ATV930D55N4Z...D90N4Z

2 frame sizes for IP00 products

Frame size 3Y	Frame size 5Y
• 3-phase 500...690 V, 2.2...30 kW, 3...40 HP	• 3-phase 500...690 V, 37...90 kW, 50...125 HP
ATV930U22Y6...D30Y6	ATV930D37Y6...D90Y6

Frame Sizes for IP55 Products - Wall Mounting

3 frame sizes for IP55 products, with or without integrated disconnect switch

Frame size A	Frame size B	Frame size C
• 3-phase 380...480 V, 0.75...22 kW, 1...30 HP, with or without Vario disconnect switch	• 3-phase 380...480 V, 30...45 kW, 40...60 HP, with or without Vario disconnect switch	• 3-phase 380...480 V, 55...90 kW, 75...125 HP, with or without Vario disconnect switch
ATV950U07N4(E)...U75N4(E), ATV950D11N4(E)...D22N4(E)	ATV950D30N4(E)...D45N4(E)	ATV950D55N4(E)...D90N4(E)
The suffix E indicates a product including a Vario disconnect switch.		

Frame Sizes for IP21 Products - Floor Standing

2 frame sizes for IP21 products

Frame size FS1	Frame size FS2
• 3-phase 380...440 V, 110...160 kW	• 3-phase 380...440 V, 200...315 kW
ATV930C11N4F...C16N4F	ATV930C20N4F...C31N4F

Frame Sizes for IP54 Products - Floor Standing

2 frame sizes for IP54 products

Frame size FSA	Frame size FSB
• 3-phase 380...440 V, 110...160 kW	• 3-phase 380...440 V, 200...315 kW
ATV950C11N4F...C16N4F	ATV950C20N4F...C31N4F

ATV900 Catalog Number Description

ATV	950	D	75	N4	E

Product Range

ATV	Altivar

Product Type

930	Standard product
940	AFE product IP21
950	Harsh Environment Wall & floor standing product IP55/IP54
960	Drive System
980	AFE Drive System

Factor for power rating

U	power x 0.1
D	power x 1
C	power x 10
M	power x 100
T	power x 1000

Power rating

07 - 11 - 13 - 15 - 16 - 18 - 20 - 22 - 25 - 30 - 31 - 40 - 45 - 55 - 63 - 75 - 90

Power part supply

M3	200 Vac (200…240 Vac)
N4	400 Vac (380…480 Vac)
S6	600 Vac (600 Vac)
Y6	690 Vac (500...690 Vac)

Product variants

E	ATV950 with load switch (load switch is embedded in floor standing version)
F	ATV930 & ATV950 floor standing version
C	ATV930 without braking transistor/chopper
MN	ATV930 Frame size 7, Marine. Line choke to be ordered separately, no DC choke provided
X	ATV930 600 V, without embedded EMC filter
Z	ATV930 400 V400 V for cabinet integration, without top cover, conduit box and display terminal

NOTE: see the catalog for possible combinations.

Nameplate Example

The nameplate contains the following data:

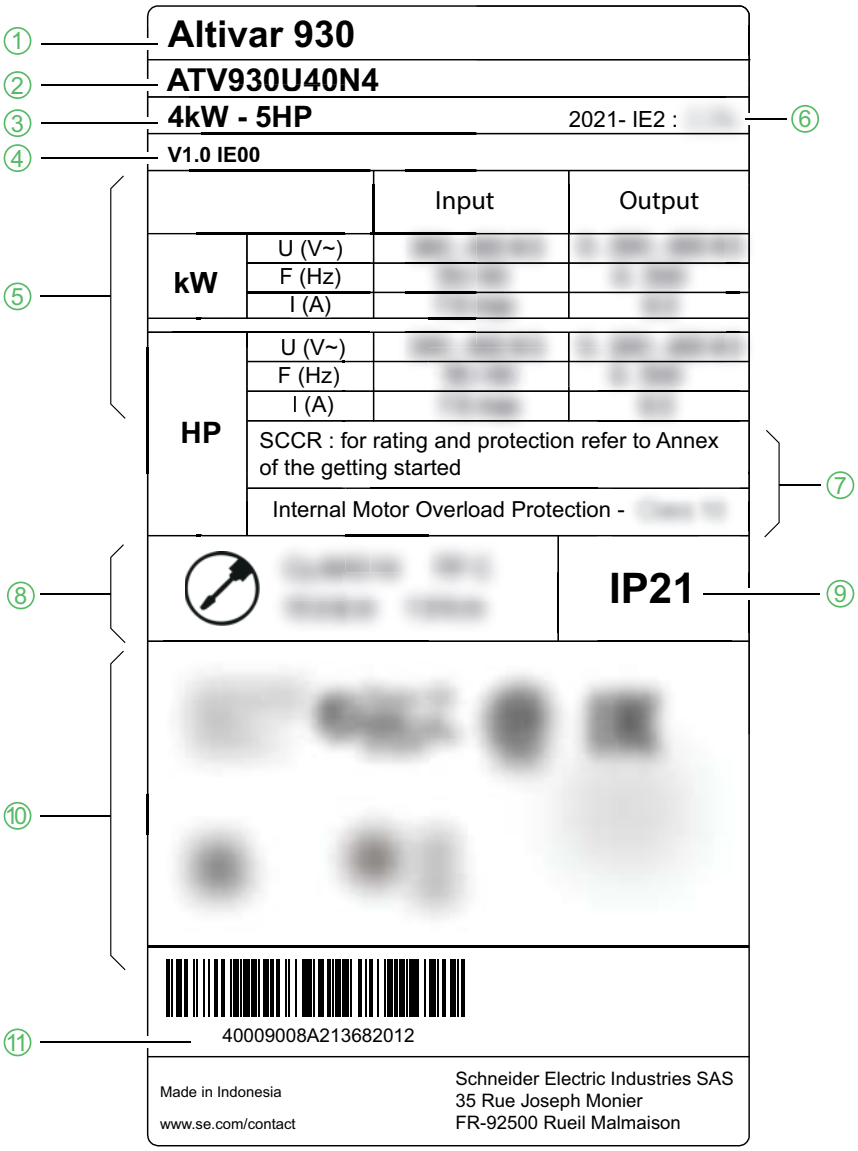

1	Product type	5	Power part information	9	Degree of protection
2	Catalog number	6	Ecodesign regulation code	10	Certifications
3	Power rating	7	Fuses and overload protection information	11	Serial number
4	Firmware version	8	Power part cable information		

Manufacturing Date

Use the serial number 11 of the drive to retrieve its manufacturing date.

The four digits before the last 5 characters of the serial number provide respectively the year and the week of manufacture.

In the nameplate example illustrated above 40009008A**2136**82012 the manufacturing date is year 2021, week 36.

Manufacturing Plant

Use the serial number ⑪ of the drive to retrieve its manufacturing plant.

The two digits after the first 7 characters of the serial number provide respectively the manufacturing plant.

In the nameplate example illustrated above 4000900**8A**213682012 the manufacturing plant is 8A.

Accessories and Options

Introduction

Altivar Process drives are designed to take numerous accessories and options to increase their functionality. For a detailed description and catalog numbers, refer to the Catalog on www.se.com.

All accessories and options come with an instruction sheet to help installation and commissioning. Therefore you will only find here a short product description.

Accessories

Drive

- Fan replacement kit
- External braking resistors
- External braking unit for frame size 6

Graphic display terminal

- Remote mounting kit for mounting on enclosure door
- Multidrop connection accessories for connecting several drives to the RJ45 terminal port

Drive mounting kits

- Flange-mounting kit, page 120 for separate air flow

EMC Plates for IP20 drives of frame sizes 1...5

- These EMC plates are intended to be mounted on IP20 drives for cabinet integration , page 23. Refer to the dedicated instruction sheet PHA93871.

IP upgrade

- Metal conduit box for frame sizes 6, 7A, 7B, 3Y and 5Y product for IP21 degree of protection on bottom side

Modbus Communication tools

- Wifi dongle
- Bluetooth dongle
- USB to Modbus adapter

Options

Encoder interfaces modules

- Resolver interface module
- Digital encoder interface module 5/12 V
- Analog encoder interface module
- HTL encoder interface module

I/O extension modules

- Digital and analog I/O module
- Relay output module

Communication modules

- CANopen daisy chain
- CANopen SUB-D
- CANopen screw terminal block
- PROFINET
- PROFIBUS DP V1
- DeviceNet
- EtherCAT
- POWERLINK

Additional Module Support. It enables the connection of a...

- Safety Module
- Extended I/O module
- Extended relay module

Braking units

Braking resistors

Filters

Passive filters

EMC input filters

Output filters

- dv/dt filters
- Sinus filters
- Common mode filters for frame sizes 1...6

Altivar Efficiency Calculator

Description

This tool calculates the level of energy efficiency of your variable speed drive according to the Ecodesign standard EN/IEC 61800-9-2.

In 2 specific cases :

- **Drive Efficiency** (CDM Complete Drive Module) :

  Performance is determined according to 8 operating points taking into account torque and speed.
- **System Efficiency** (PDS Power Drive System) :

  This includes the efficiency of the variable speed drive and its motor. Performance is determined according to 8 operating points taking into account torque and speed.

Easy access to the tool

The tool is available at the address: altivar-efficiency-calculator.se.app

Steps for setting up the drive

INSTALLATION

1 Receive and inspect the drive controller

- ☐ Check that the catalog number printed on the label is the same as that on the purchase order.
- ☐ Remove the drive from its packaging and check that it has not been damaged.

2 Verify the supply mains

- ☐ Verify that the supply mains is compatible with the power part supply range of the drive.

3 Mount the drive

- ☐ Mount the drive in accordance with the instructions in this document.
- ☐ Install the transformer(s), if any.
- ☐ Install any internal and external options.

4 Wire the drive

- ☐ Connect the motor, ensuring that its connections correspond to the voltage.
- ☐ Connect the supply mains, after making sure that the power is off.
- ☐ Connect the control.

Steps 1 to 4 must be performed with the power off.

5 PROGRAMMING

Refer to the Programming Manual

Preliminary Instructions

Inspecting the product

Damaged products or accessories may cause electric shock or unanticipated equipment operation.

⚠⚠DANGER

ELECTRIC SHOCK OR UNANTICIPATED EQUIPMENT OPERATION

Do not use damaged products or accessories.

Failure to follow these instructions will result in death or serious injury.

Contact your local Schneider Electric sales office if you detect any damage whatsoever.

Step	Action
1	Verify that the catalog number printed on the nameplate corresponds to the purchase order.
2	Before performing any installation work, inspect the product for visible damage.

Handling

⚠WARNING

INCORRECT HANDLING

- Lifting and handling must be performed by qualified personnel in accordance with the requirements of the site and in compliance with all pertinent regulations.
- Verify that there are no persons or obstructions in the area of operation of the lifting and handling equipment.
- Use lifting and handling equipment appropriate for the load and take all necessary measures to avoid swinging, inclination, toppling and any other potentially hazardous conditions.
- Follow all handling instructions provided in this manual and in all associated product documentation.
- Take all measures required to avoid damage to the product and other hazards when handling or opening the packaging.
- Handle and store the product in its original packaging.
- Do not handle and store the product if the packaging is damaged or appears to be damaged.

Failure to follow these instructions can result in death, serious injury, or equipment damage.

To help protect the product before installation, handle and store it in its packaging.

Ensure that the specified ambient conditions are followed.

Handling the Wall Mounting Drives Up to Frame Size 6

Altivar Process drives of frame size A, and frame sizes 1 up to 3 can be removed from their packaging and installed without a handling device.

Higher frame size drives require a handling device. All drives have either lifting eyes or lifting lugs for handling.

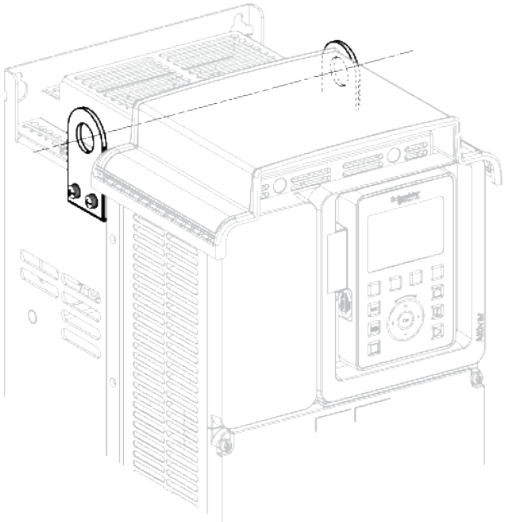

Unpacking the Frame Size 7A and 7B Drives

The drive and the DC choke(s) are mounted on a pallet with screws.

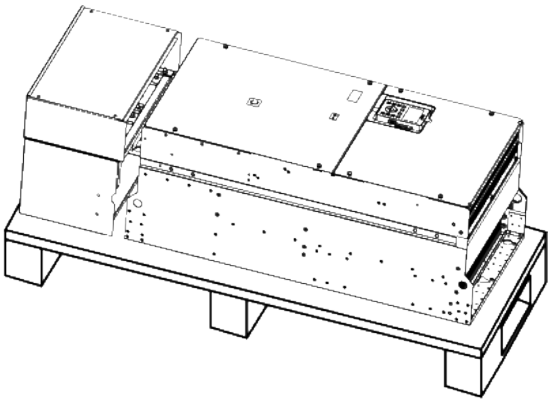

Removing the DC Chokes of Frame Size 7A and 7B Drives from the Pallet

⚠CAUTION

SHARP EDGES

Use all necessary personal protective equipment (PPE) such as gloves when removing the components from the pallet.

Failure to follow these instructions can result in injury or equipment damage.

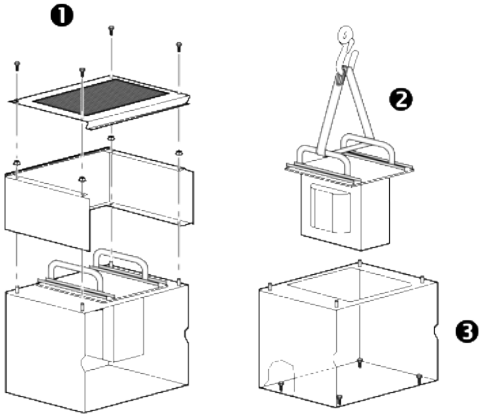

Procedure:

Step	Action
1	Remove the screws as shown in the illustration
2	Remove the DC choke(s) by means of a hoist
3	Remove the fixing screws from the DC choke housing
4	Remove the DC choke housing from the pallet

Keep all parts and components for the mounting procedure, page 147.

Hoisting the Frame Size 7A and 7B Drives

⚠WARNING

TOPPLING, SWINGING, OR FALLING EQUIPMENT

- Take all measures necessary to keep the equipment from swinging, toppling and falling.
- Follow the instructions provided to remove the equipment from the packaging and to mount it at its final position.

Failure to follow these instructions can result in death, serious injury, or equipment damage.

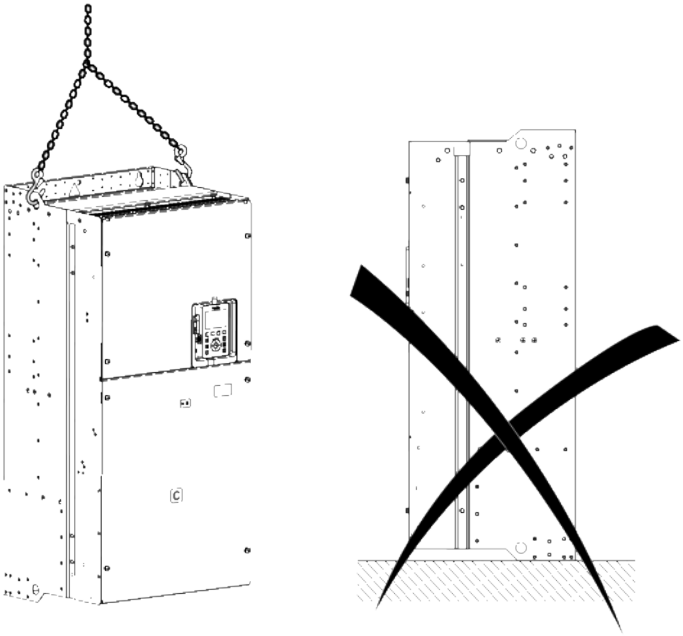

Procedure:

Step	Action
1	Remove the screws holding the drive on the pallet
2	Lift the drive by means of a hoist. Use the handling lugs of the drive to fasten the lifting equipment
3	Keep the drive suspended by means of appropriate equipment until it is securely fastened in the final installation position
4	Move the drive to the final installation position on a wall or the back of the enclosure in accordance with the instructions given in this document, page 117

Handling and Hoisting the Floor Standing Drives

⚠ WARNING

TIPPING

- Take into account the high center of gravity when handling the equipment.
- Only transport the equipment on the pallet using a suitable forklift.
- Do not remove the straps and the screws on the pallet before the equipment has been transported to the final installation position.

Failure to follow these instructions can result in death, serious injury, or equipment damage.

NOTE: Handling, hoisting and installation of the floor standing drives are described in the dedicated instruction sheet NVE57369 delivered with these drives and available on se.com.

Technical Data

What's in This Part

Environment Data 41
Dimensions and Weights 45
Electrical Data - Drive Ratings 73
Electrical Data - Upstream Protective Device 92

Environment Data

What's in This Chapter

Temperature Conditions....42
Altitude Conditions....43
Chemical and Mechanical Conditions....44

Temperature Conditions

Climatic Environmental Conditions for Transportation and Storage

The environment during transportation and storage must be dry and free from dust.

Storage Temperature	All drives other than frame size 7 and floor standing products	°C	-40...70
		°F	-40...158
	Frame sizes 7 and floor standing drives	°C	-25...70
		°F	-13...158
Transportation Temperature	All drives other than frame size 7 and floor standing products	°C	-40...70
		°F	-40...158
	Frame size 7 and floor standing drives	°C	-25...70
		°F	-13...158
Relative humidity		%	5...95

Climatic Environmental Conditions for Operation

The maximum permissible ambient temperature during operation depends on the mounting distances between the devices and on the required power. Observe the pertinent instructions in the chapter Drive Mounting, page 116.

NOTE: The drive is designed to be used in a controlled indoor environment.

Frame sizes 1...3, 3S, 3Y, 4, 5, 5S, 5Y and 6 Wall mounting drives and Cabinet mounting drives	Temperature without derating	°C	-15...50
		°F	5...122
	Temperature with derating of output power (1)	°C	Up to 60
		°F	Up to 140
Frame sizes 7A and 7B Wall mounting drives	Temperature without derating	°C	-10...40
		°F	14...104
	Temperature with derating of output power (1)	°C	Up to 60
		°F	Up to 140
Frame sizes A...C Wall mounting drives	Temperature without derating	°C	-15...40
		°F	5...104
	Temperature with derating of output power (1)	°C	Up to 50
		°F	Up to 122
All frame sizes Floor standing drives	Temperature without derating	°C	0...40
		°F	32...104
	Temperature with derating of output power (1)	°C	Up to 50
		°F	Up to 122
All products	Relative humidity without condensing	%	5...95

(1) Refer to Derating Curves section , page 129.

Altitude Conditions

Operating Altitude

All frame sizes, except frame size 7

Altitude	Supply voltage (1)	Supply Electrical Network			Derating
		TT/TN	IT	Corner-Grounded	
Up to 1000 m (3300 ft)	200…240 V	✓	✓	✓	o
	380…480 V (2)	✓	✓	✓	o
	600 V	✓	✓	–	o
	500…690 V	✓	✓	–	o
1000…2000 m (3300…6600 ft)	200…240 V	✓	✓	✓	✓
	380…480 V (2)	✓	✓	✓	✓
	600 V	✓	✓	–	✓
	500…690 V	✓	✓	–	✓
2000…3800 m (6600…12400 ft)	200…240 V	✓	✓	✓	✓
	380…480 V (2)	✓	✓	–	✓
	600 V	✓	✓	–	✓
	500…690 V	–	–	–	–
3800…4800 m (12400…15700 ft)	200…240 V	✓	✓	✓	✓
	380…480 V (2)	✓	–	–	✓
	600 V	✓	–	–	✓
	500…690 V	–	–	–	–

(1) Tolerance: –15...+10%

(2) The voltage of floor standing drives ATV••0•••N4F is limited to 440 Vac.

Legend:

✓: Derate the nominal current of the drive by 1% for each additional 100 m.

o: Without derating

–: Not applicable

Frame Size 7

Altitude	Supply voltage (1)	Supply Electrical Network			Derating
		TT/TN	IT	Corner-Grounded	
Up to 1000 m (3300 ft)	380…480 V	✓	✓	✓	o
1000…2000 m (3300…6600 ft)	380…480 V	✓	✓	✓	✓
2000…3000 m (6600…9800 ft)	380…480 V	✓	✓	–	✓

(1) Tolerance: –15...+10%

Legend:

✓: Derate the nominal current of the drive by 1% for each additional 100 m.

o: Without derating

–: Not applicable

Chemical and Mechanical Conditions

Withstand to harsh environments, conforming to IEC/EN 60721-3-3

Drive	Chemical active substances	Mechanical active substances	Mechanical conditions
All, except frame size 7	class 3C3	class 3S3	class 3M3
Frame size 7	class 3C2	class 3S2	class 3M3

Dimensions and Weights

About the drawings

All drawings CAD files can be downloaded from www.se.com

NOTE: When designing your installation, please take into account that all depth values should be increased by 49 mm (2 in.) in case of using the additional slot option. This option module takes place between the graphic display terminal and the drive, causing the depth value to be increased. It enables to connect a safety output module, an I/O or relay output module.

Frame Size 1

IP21 / UL Type 1 Drives - Front, Side and Rear View

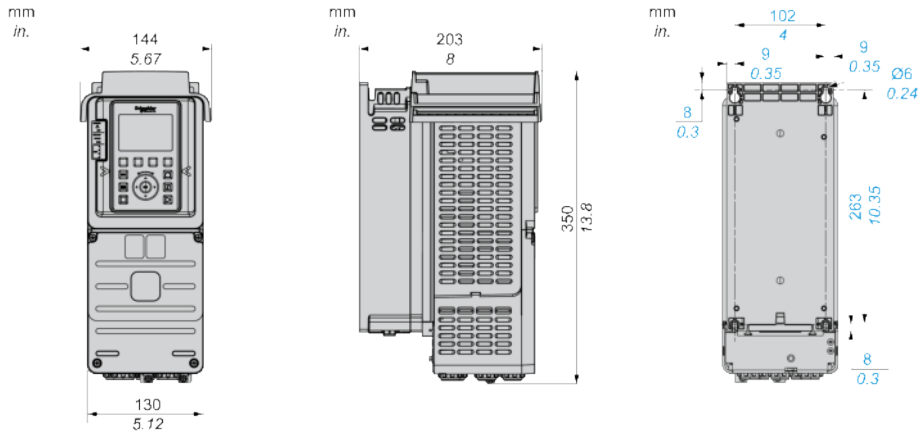

IP20 Drives - Front, Side And Rear View

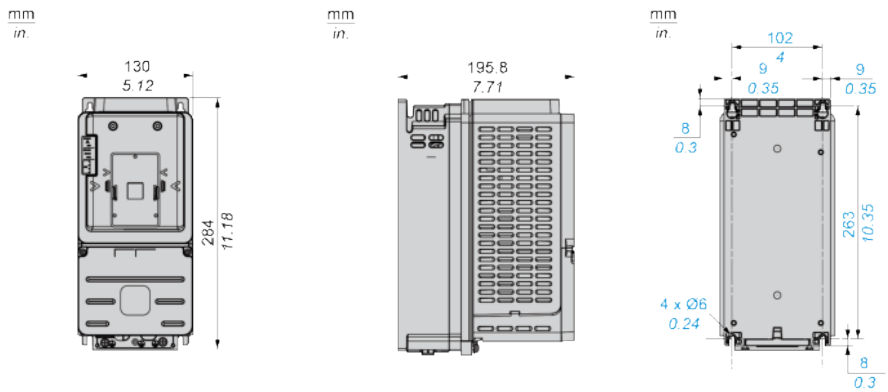

Weights

Catalog Number	Weight in kg (lb)
ATV930U07N4Z...U22N4Z	3.7 (8.2)
ATV930U30N4Z, ATV930U40N4Z	3.8 (8.4)
ATV930U55N4Z	3.9 (8.6)
ATV930U07M3, ATV930U15M3	4.3 (9.5)
ATV930U07N4...U22N4, U22M3...U30M3	4.5 (9.9)

Catalog Number	Weight in kg (lb)
ATV930U30N4, ATV930U40N4, ATV930U40M3	4.6 (10.1)
ATV930U55N4	4.7 (10.4)

Frame size 2

IP21 / UL Type 1 Drives - Front, Side and Rear View

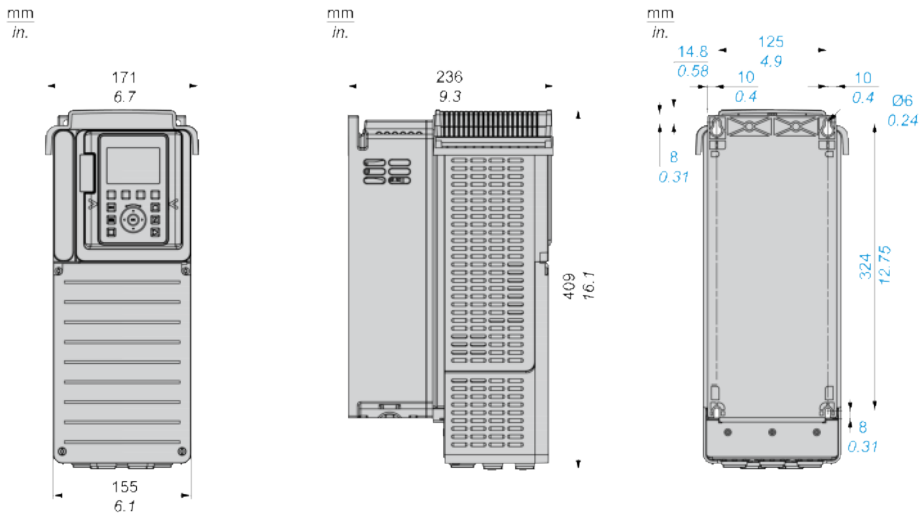

IP20 Drives - Front, Side And Rear View

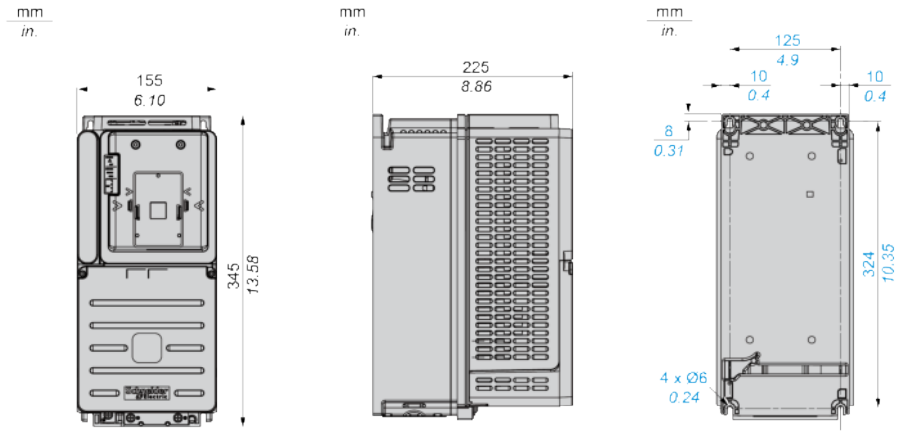

Weights

Catalog Number	Weight in kg (lb)
ATV930U75N4Z, ATV930D11N4Z	6.9 (15.2)
ATV930U22S6X...ATV930D15S6X	5.5 (12.1)
ATV930U75N4, ATV930D11N4 ATV930U55M3	7.7 (17)

Frame size 3

IP21 / UL Type 1 Drives - Front, Side and Rear View

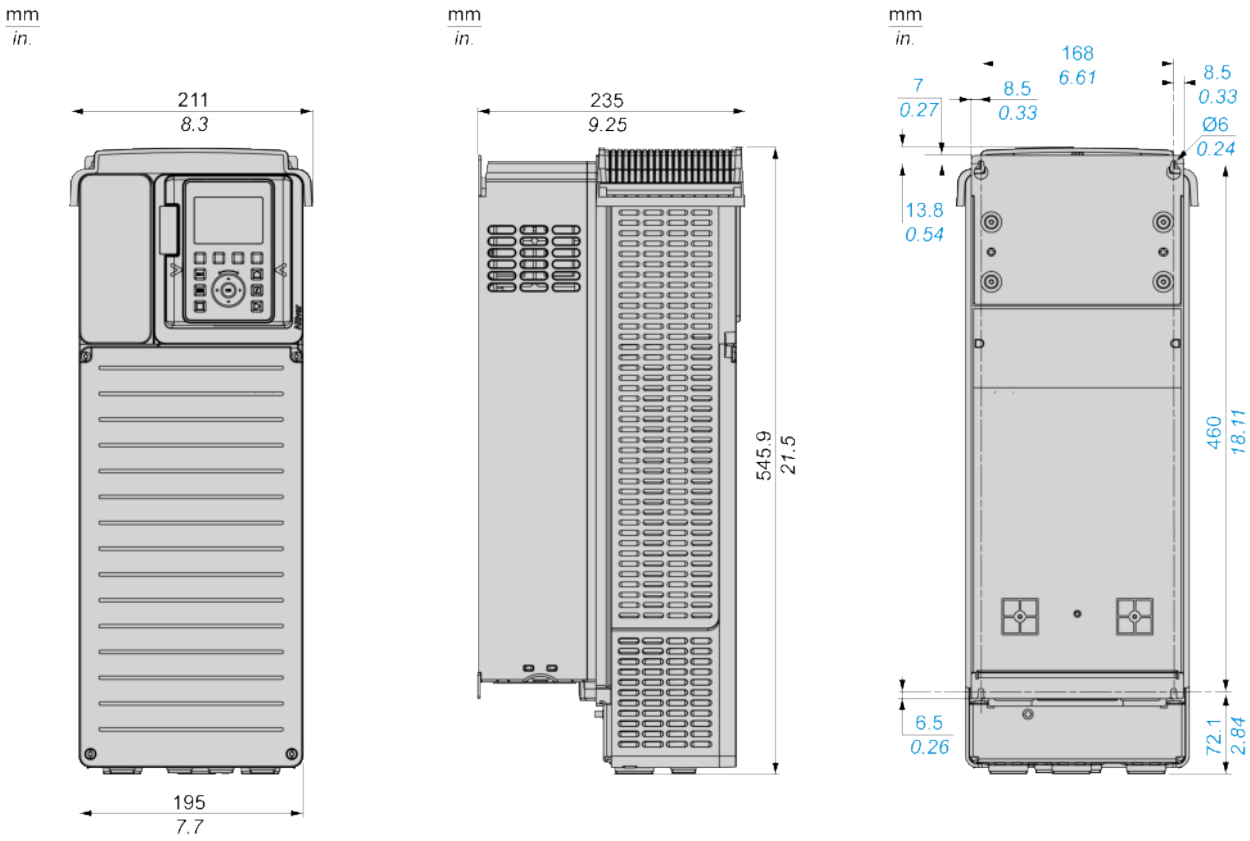

IP20 Drives - Front, Side And Rear View

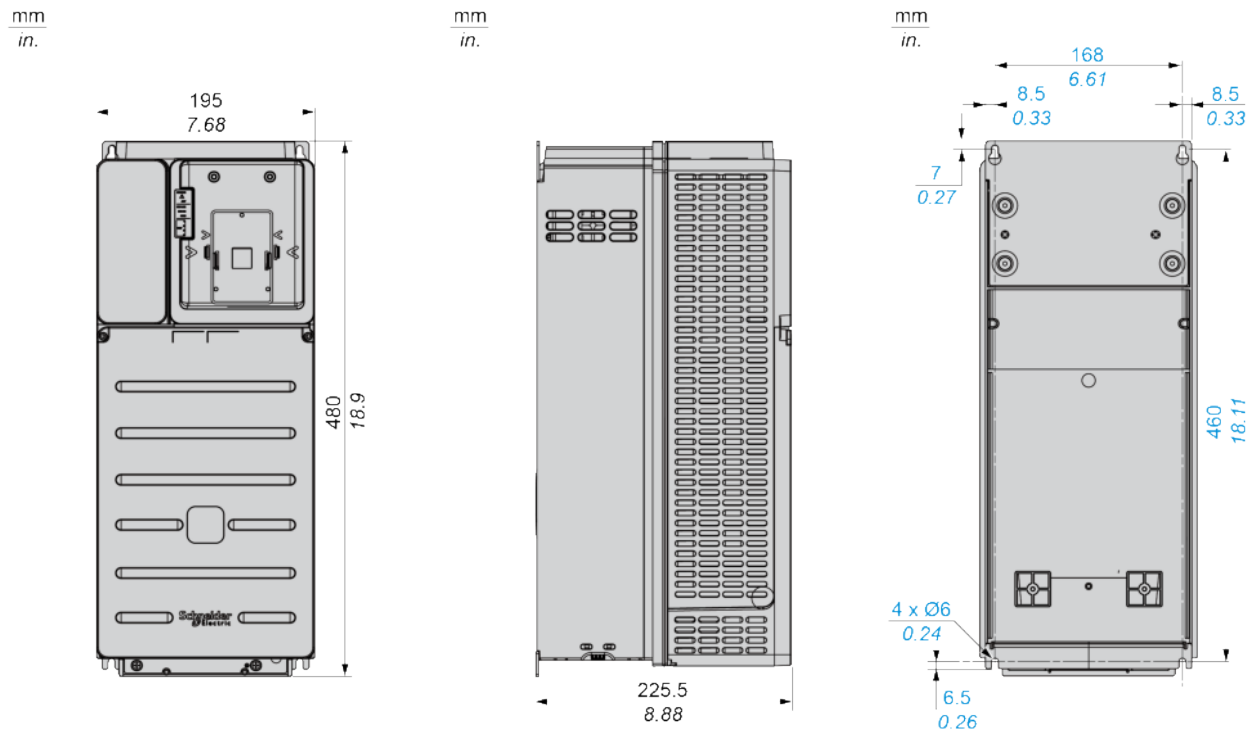

Weights

Catalog Number	Weight in kg (lb)
ATV930D15N4Z	13 (28.7)
ATV930D18N4Z	13.6 (30)
ATV930D22N4Z	13.7 (30.2)
ATV930U75M3	13.8 (30.4)
ATV930D11M3	13.8 (30.4)
ATV930D15N4	13.6 (30)
ATV930D18N4	14.2 (31.3)
ATV930D22N4	14.3 (31.5)

Frame Size 3S

IP20 / UL Type 1 Drives - Front, Side And Rear View

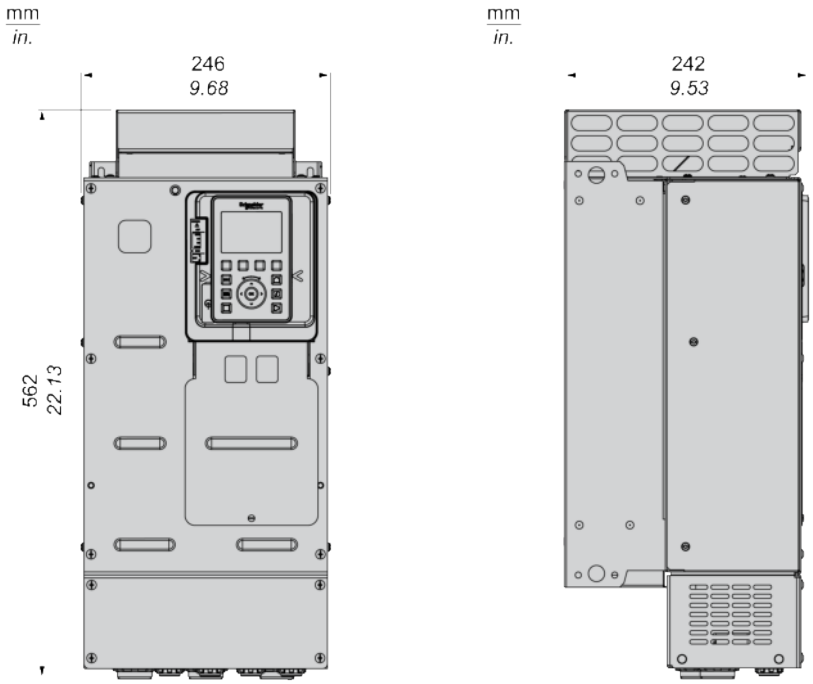

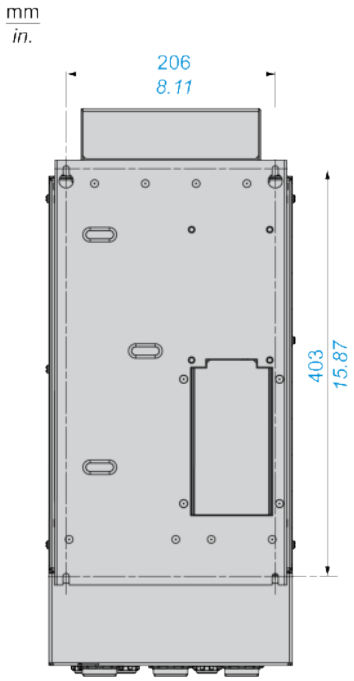

Weights

Catalog Number	Weight in kg (lb)
ATV930D18S6 and ATV930D22S6	23 (50.7)

Frame Size 3Y

IP20 on Upper Part and IP00 on Lower Part Drives - Front View With and Without and EMC Plate, Side and Rear View

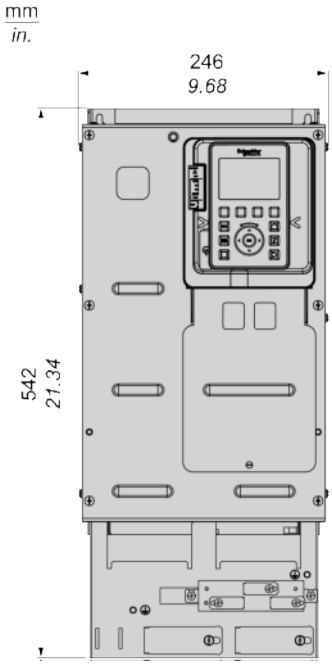

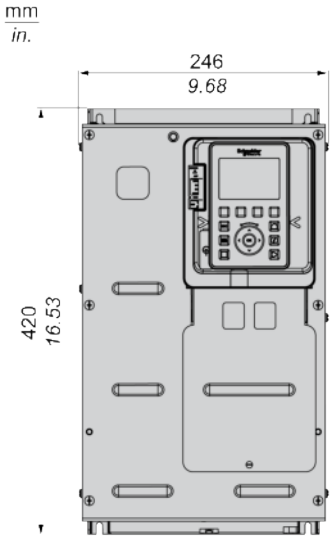

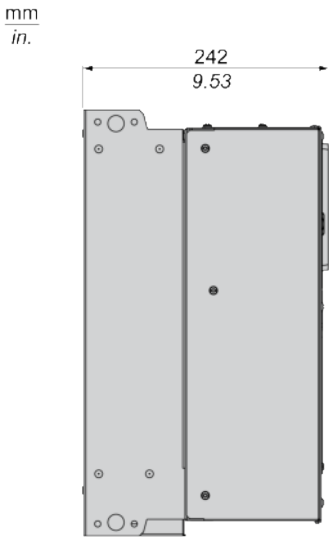

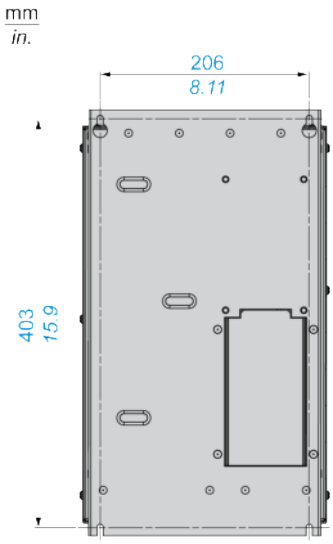

Weights

Catalog Number	Weight in kg (lb)
ATV930U22Y6...ATV930D30Y6	22 (48.5)

Frame Size 4

IP21 / UL Type 1 Drives - Front, Side and Rear View

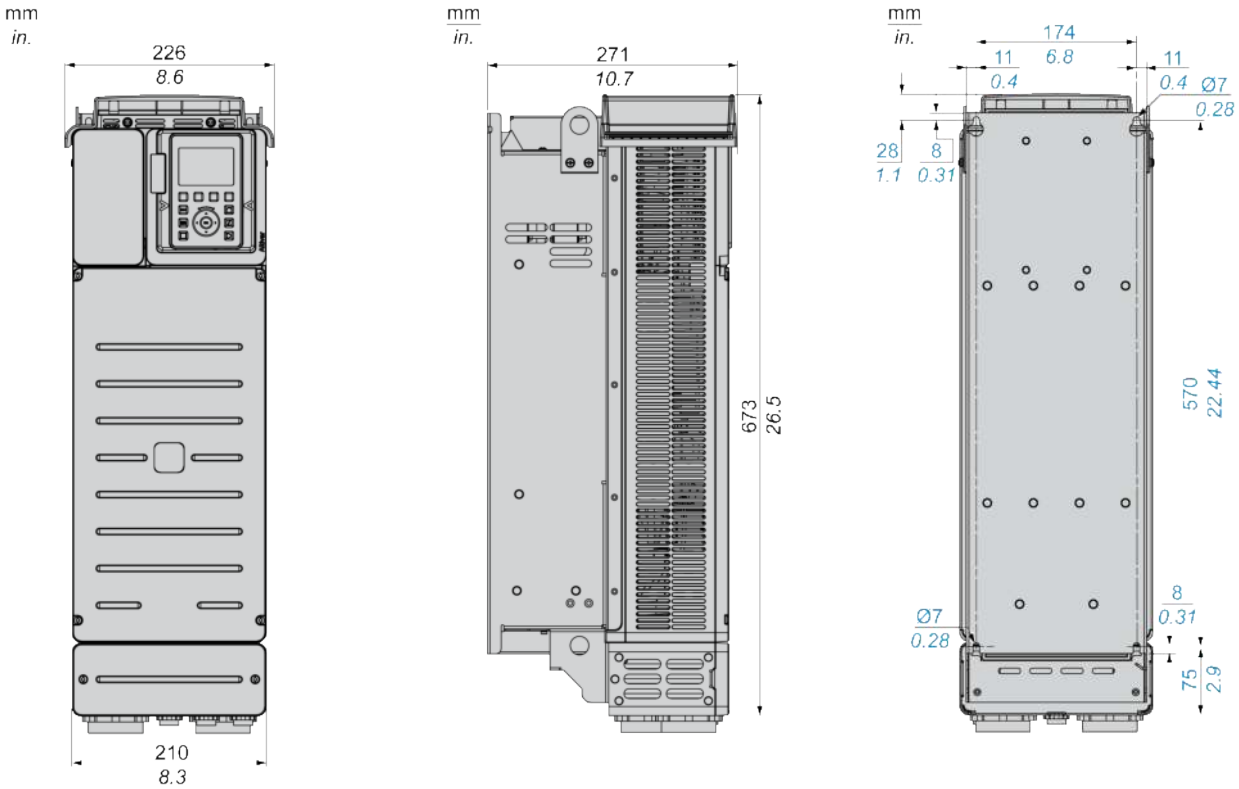

IP20 Drives, except on Lower Part side (IP00) - Front, Side And Rear View

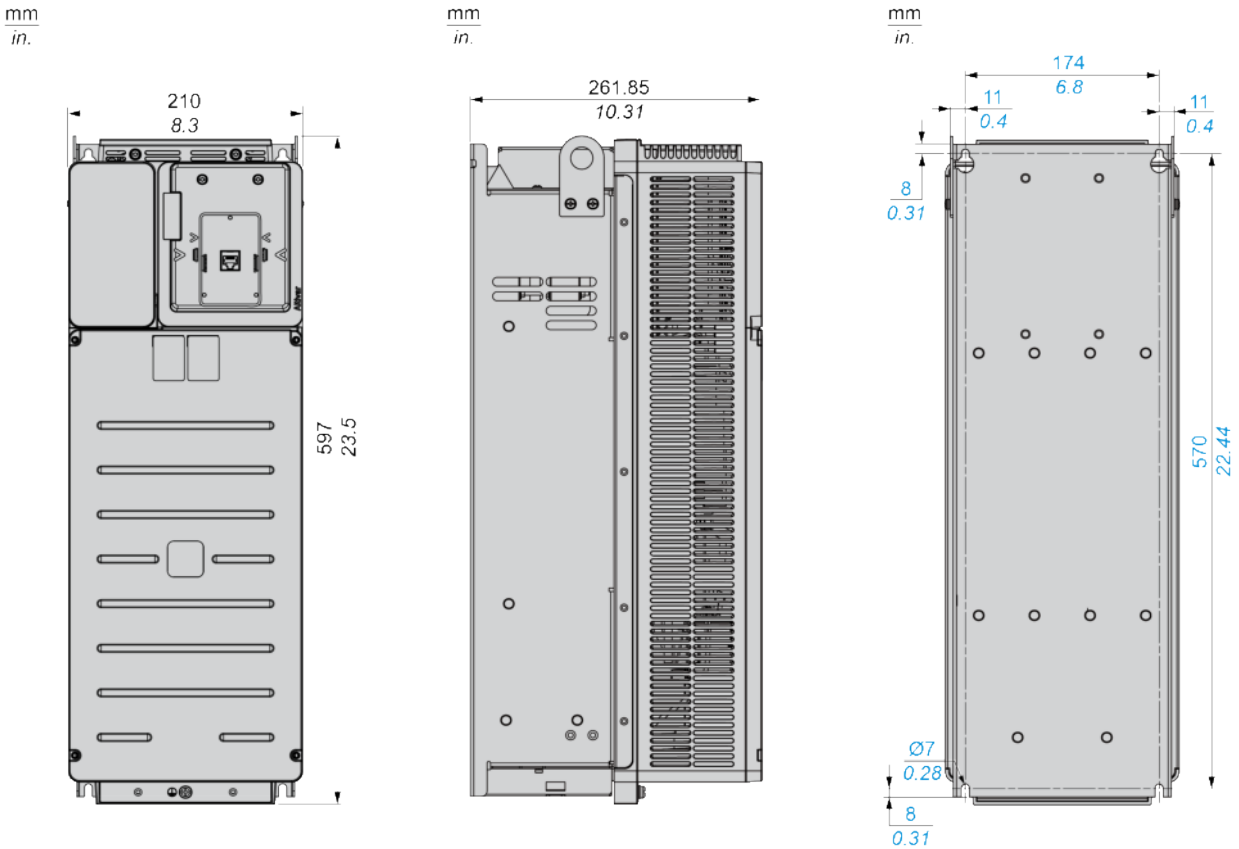

Weights

Catalog Number	Weight in kg (lb)
ATV930D30N4Z	25.8 (56.9)
ATV930D37N4Z	26 (57.3)
ATV930D45N4Z	26.5 (58.4)
ATV930D15M3...D22M3	27.3 (60.2)
ATV930D30N4	28 (61.7)
ATV930D37N4	28.2 (62.2)
ATV930D45N4	28.7 (63.3)

Frame Size 5

IP21 / UL Type 1 Drives - Front, Side and Rear View

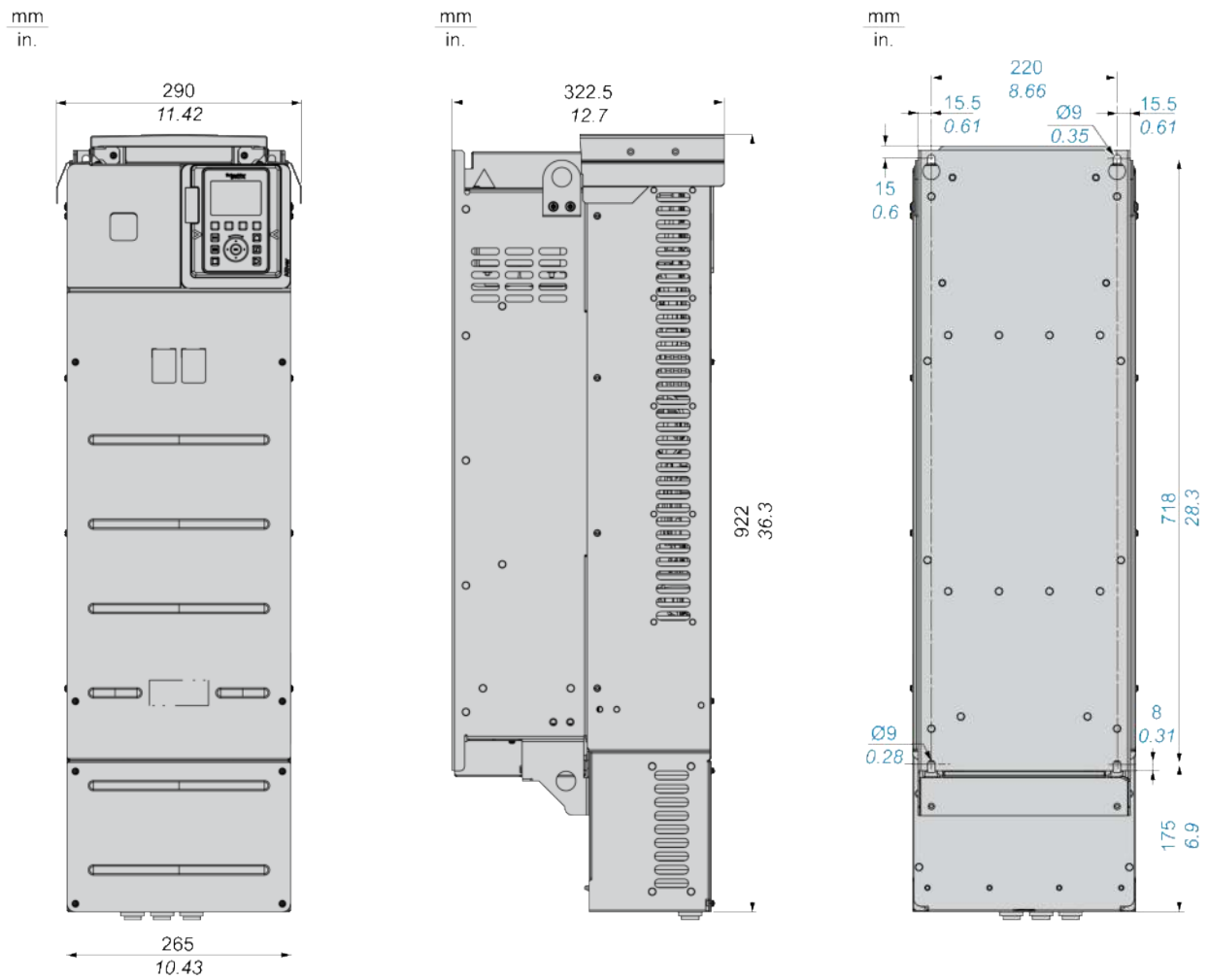

IP20 Drives, except on Lower Part side (IP00) - Front, Side And Rear View

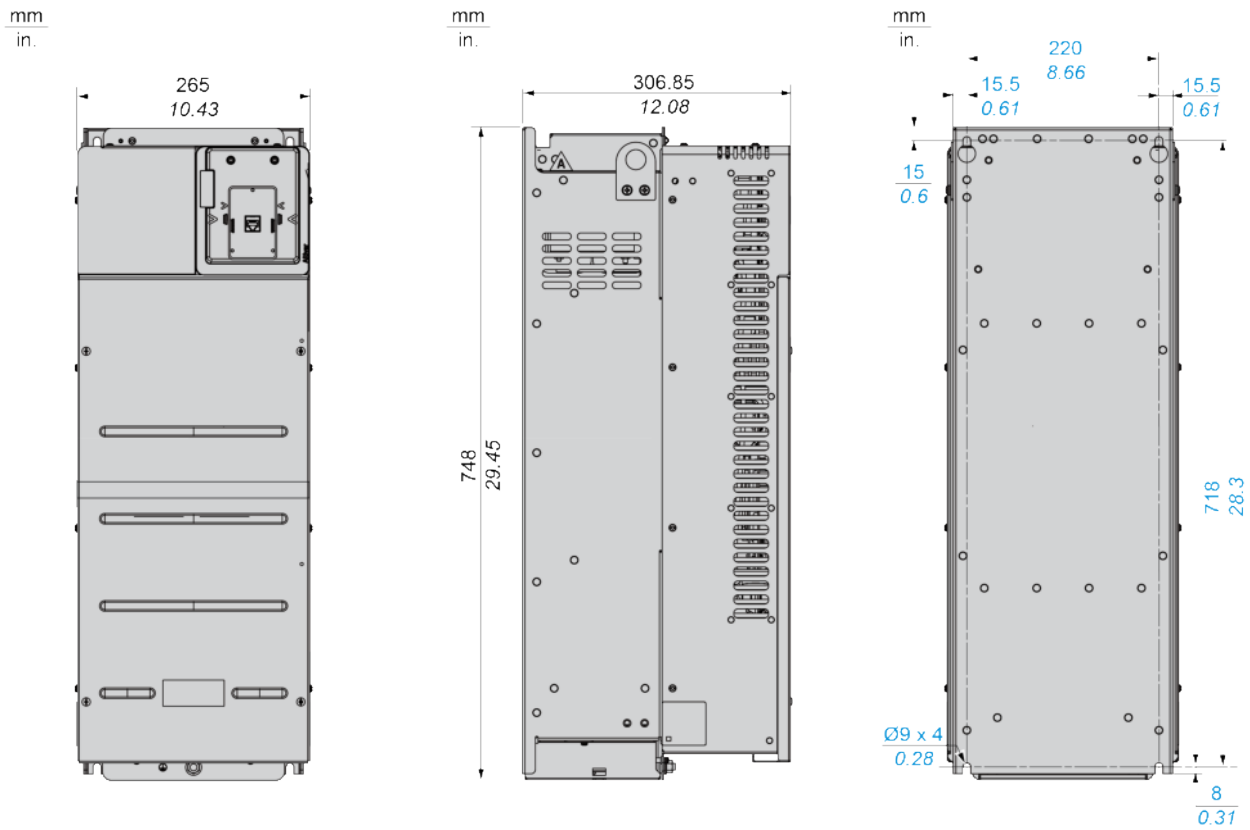

Weights

Catalog Number	Weight in kg (lb)
ATV930D55N4Z	53.6 (118.2)
ATV930D75N4Z	55.1 (121.4)
ATV930D90N4Z	55.6 (122.6)
ATV930D30M3C...D45M3C	56.6 (124.8)
ATV930D55N4C	56.5 (124.6)
ATV930D75N4C	58 (127.9)
ATV930D90N4C	58.5 (129)
ATV930D30M3...D45M3	57.6 (127)
ATV930D55N4	57.5 (126.8)
ATV930D75N4	59 (130.1)
ATV930D90N4	59.5 (131.2)

Frame Size 5S

IP20 / UL Type 1 Drives - Front, Side And Rear View

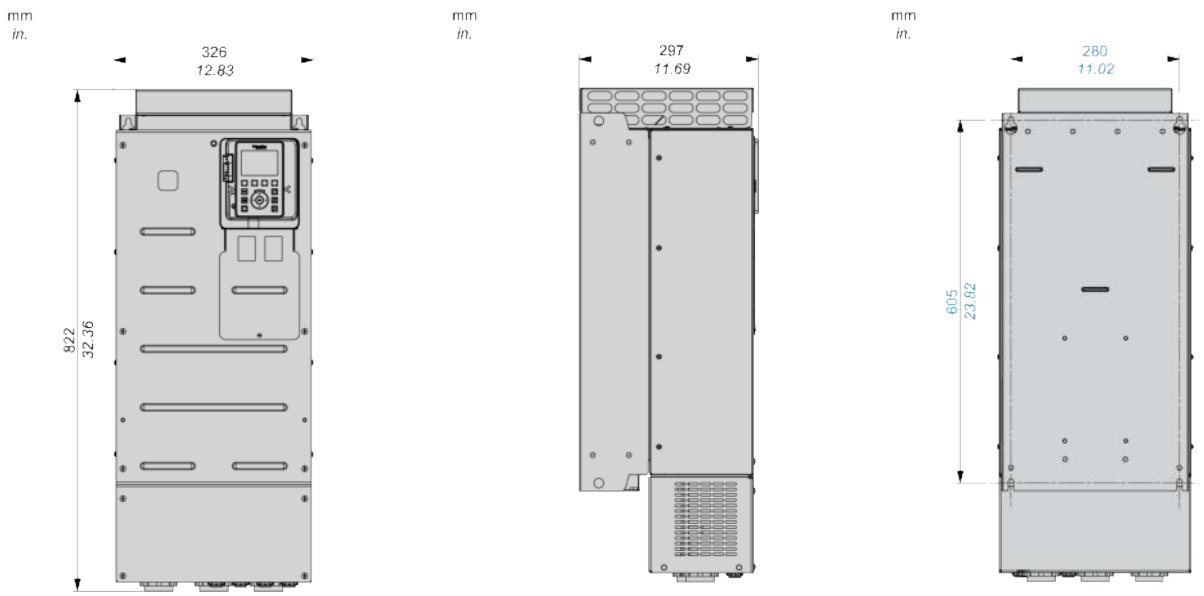

Weights

Catalog Number	Weight in kg (lb)
ATV930D30S6...ATV930D75S6	55 (121.3)

Frame Size 5Y

IP20 on Upper Part and IP00 on Lower Part Drives - Front View With and Without EMC Plate, Side and Rear View

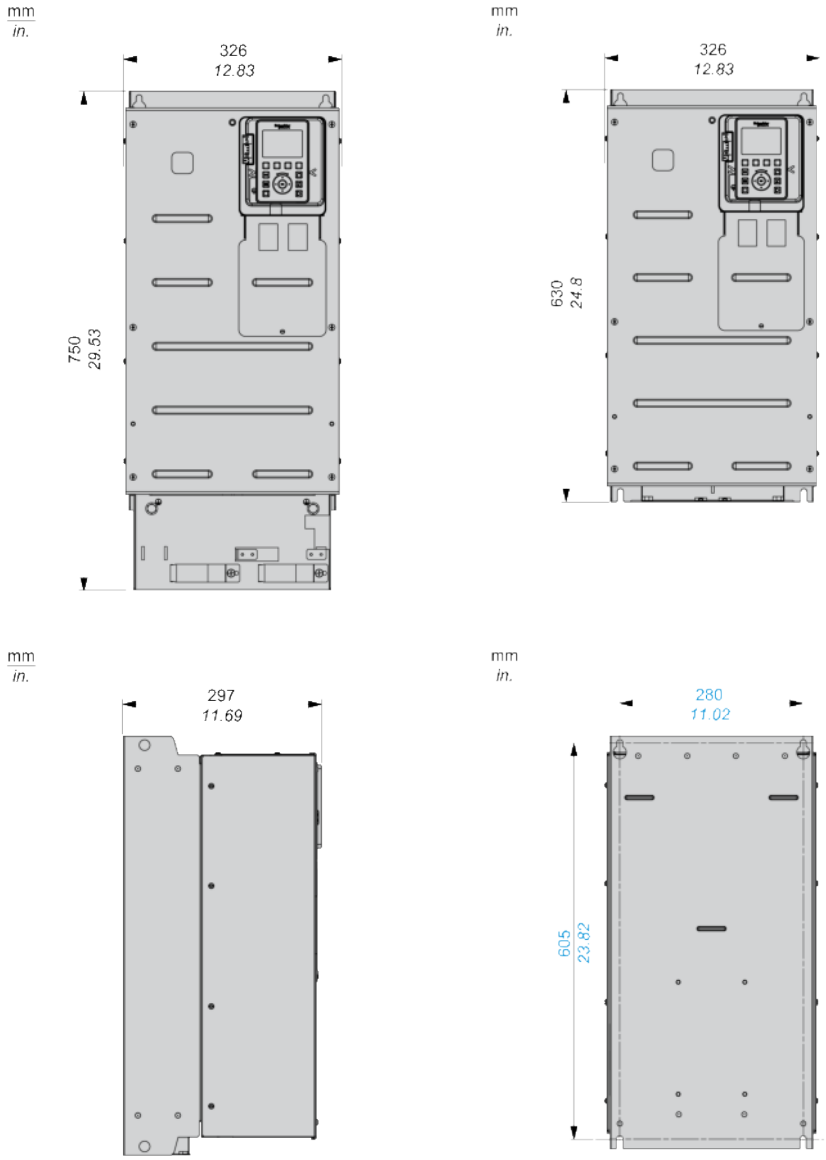

Weights

Catalog Number	Weight in kg (lb)
ATV930D37Y6...ATV930D90Y6	53 (116.8)

Frame Size 6

IP21 on Upper Part and IP00 on Lower Part / UL Type 1 Drives - Side and Front View

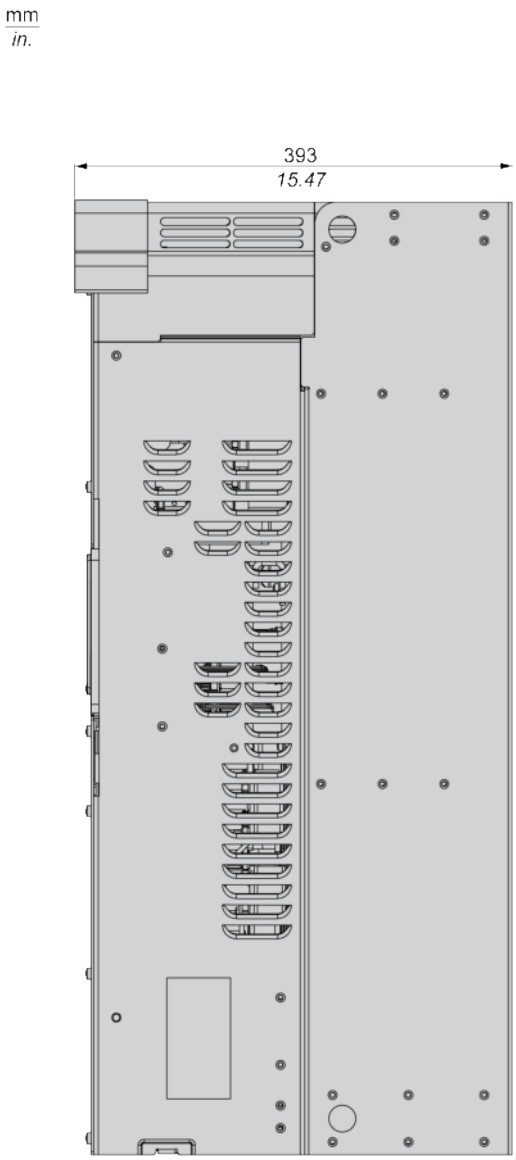

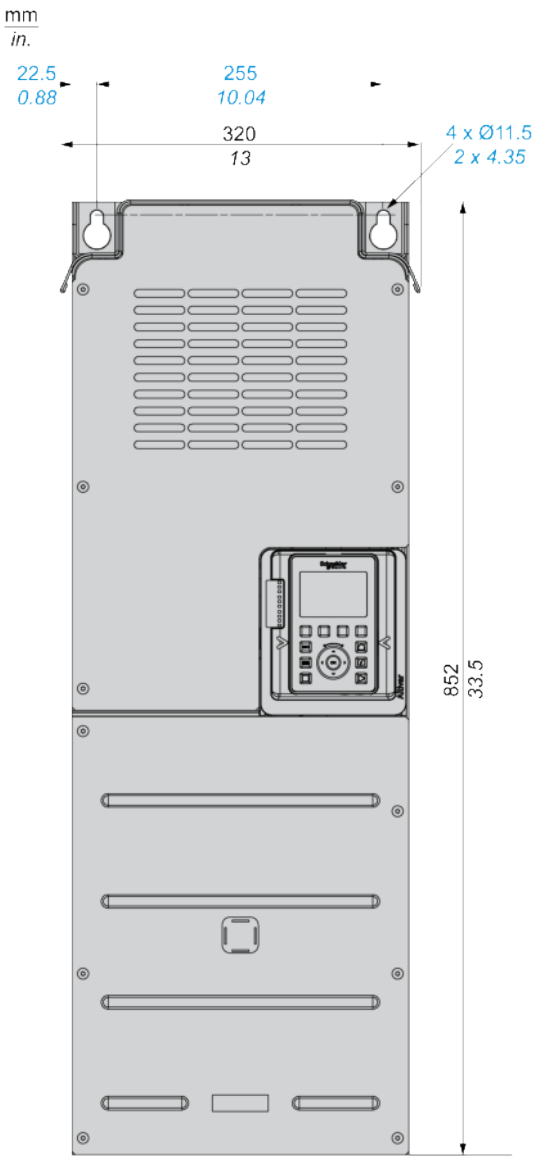

IP21 / UL Type1 Drives - Front, Rear and Side View

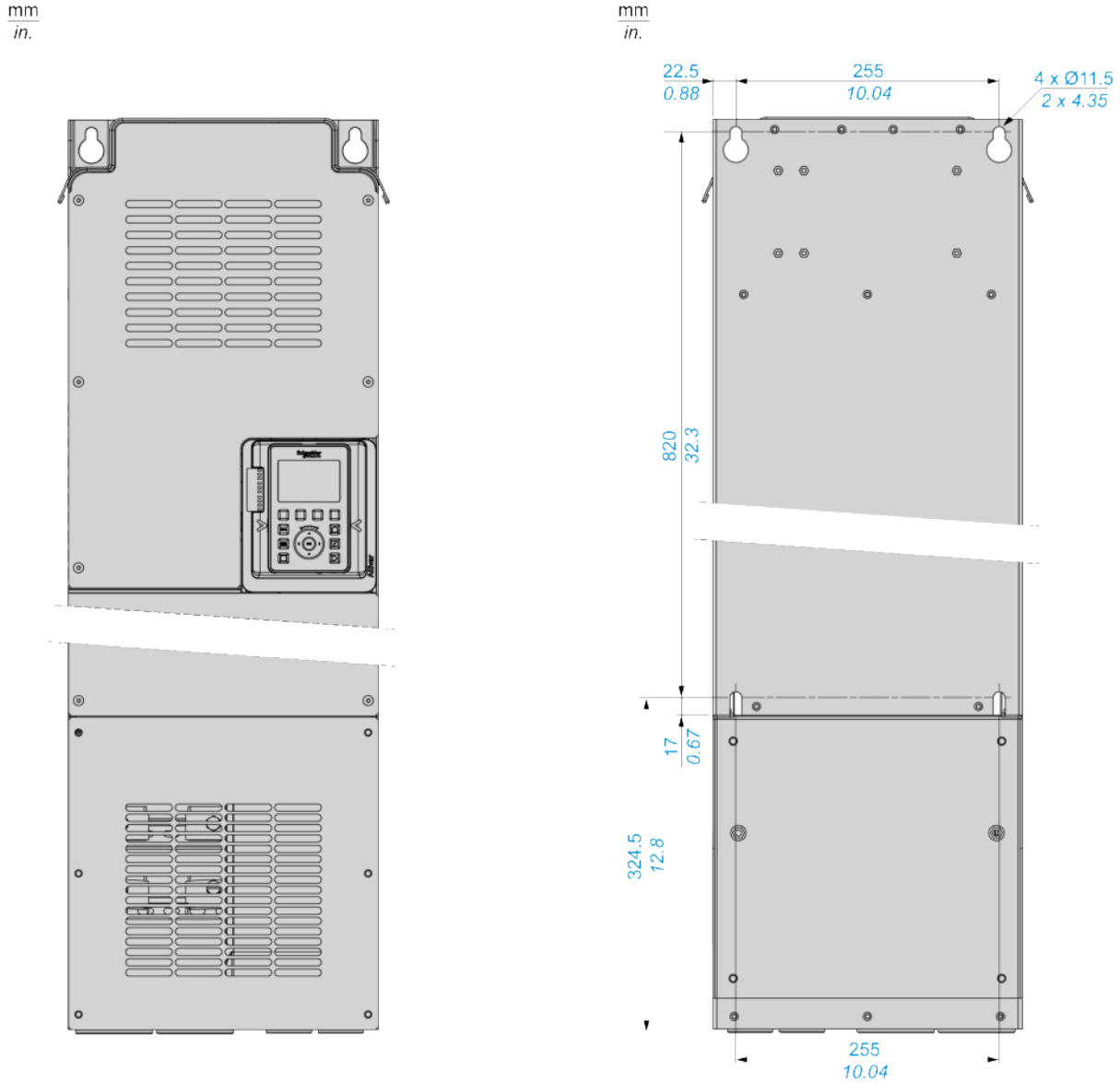

NOTE: Lower Conduit Box part VW3A9704 sold separately. This part enables wall mounting of the product. It provides IP21 protection degree on the lower part and UL type 1 protection degree.

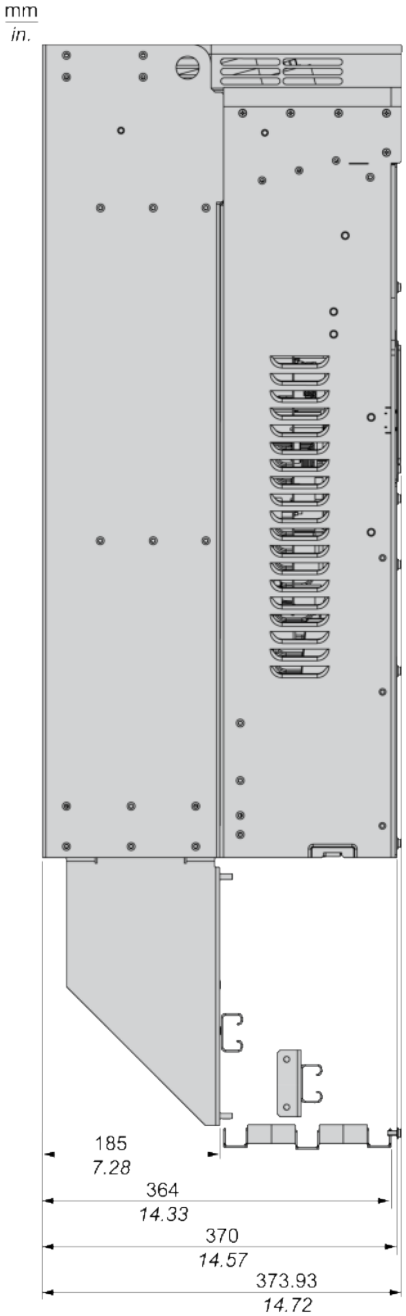
mm
in.
185
7.28
364
14.33
370
14.57
373.93
14.72

IP21 on Upper Part and IP20 on Lower Part / UL Type 1 Drives - Side and Front View

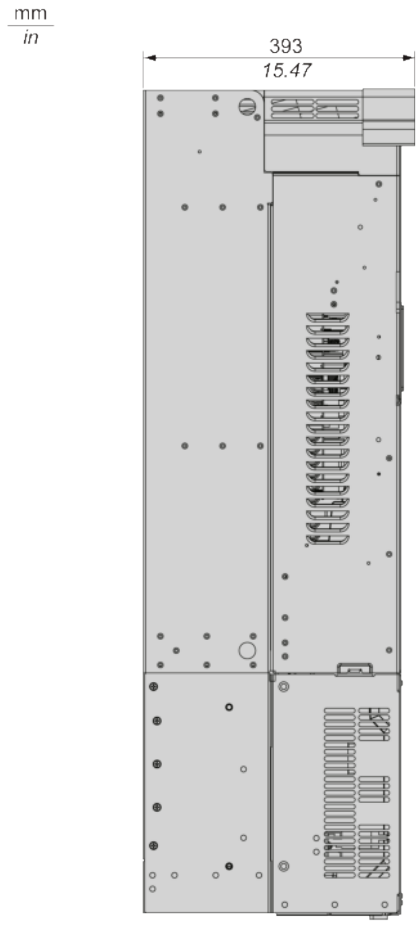

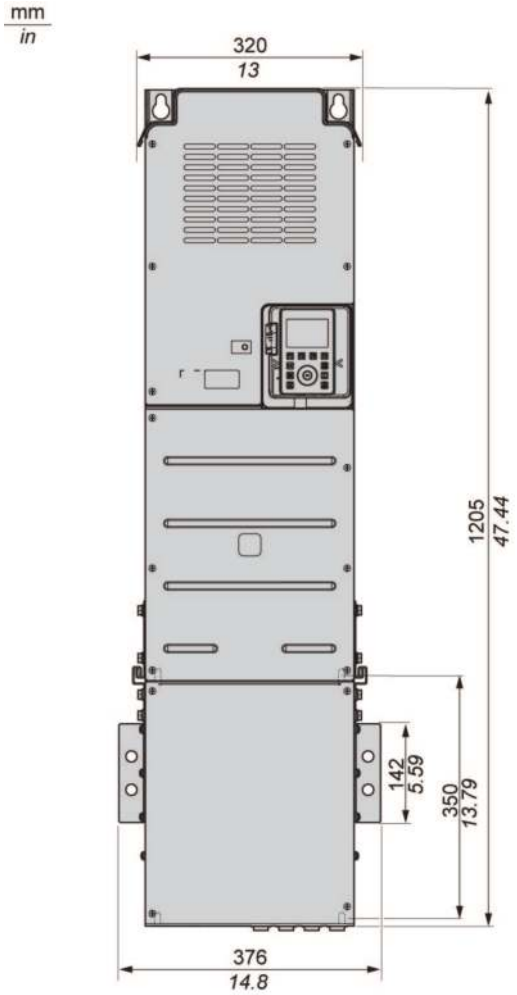

NOTE: These drives are supplied with a braking module to be mounted by the customer. Please refer to the dedicated installation manual of the braking module MFR66979.

Weights

Catalog Number	Weight in kg (lb)
ATV930C11N4C...ATV930C16N4C	82 *(181)*
ATV930C11N4...ATV930C16N4	104 *(229)*
ATV930D55M3C, ATV930D75M3C	80 *(176)*

Frame Size 7A

IP20 on Upper Part and IP00 on Lower Part Drives - Side, Front and Rear View

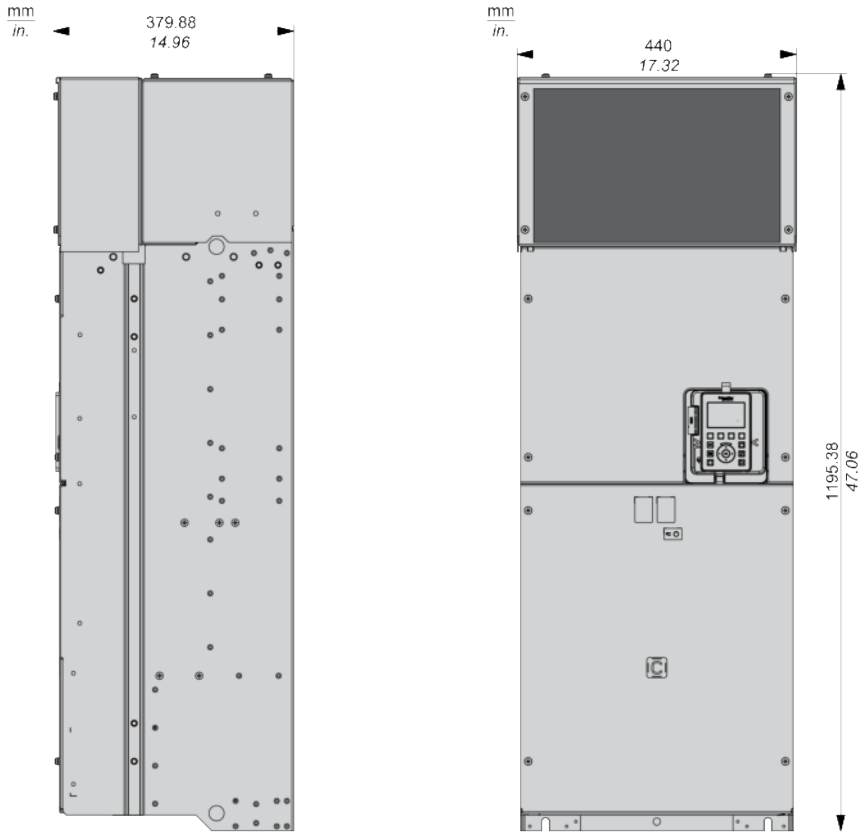

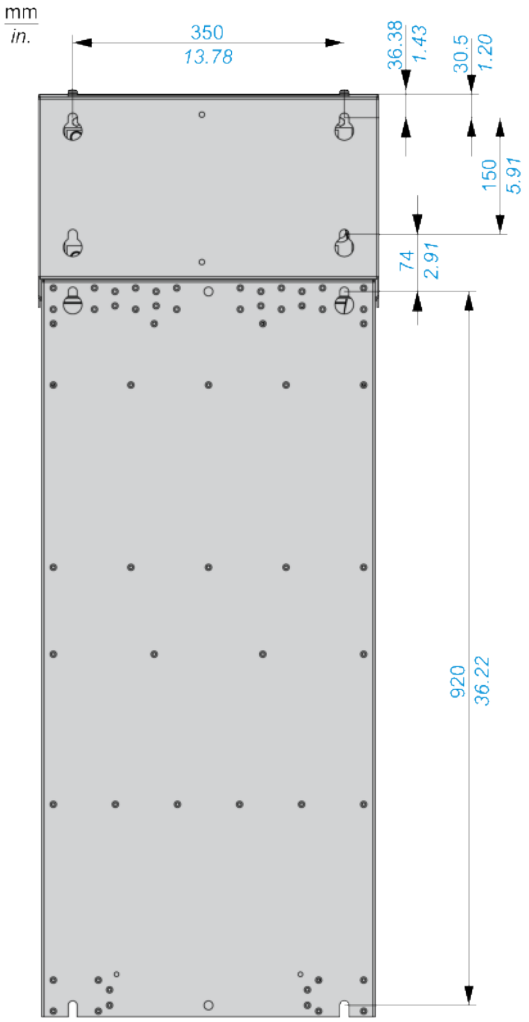

Weights

Catalog Number	Weight in kg (lb)
ATV930C22N4, ATV930C22N4C	172 *(379)*

Frame Size 7B

IP20 on Upper Part and IP00 on Lower Part Drives - Side, Front and Rear View

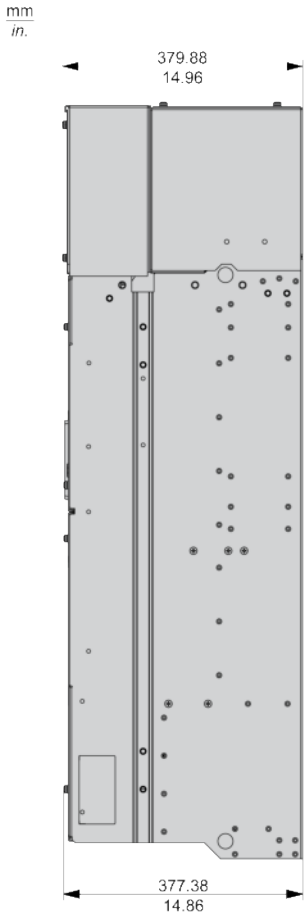

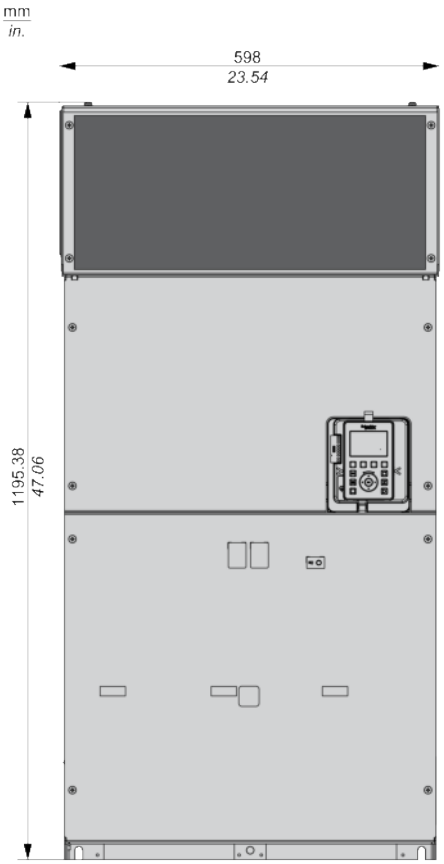

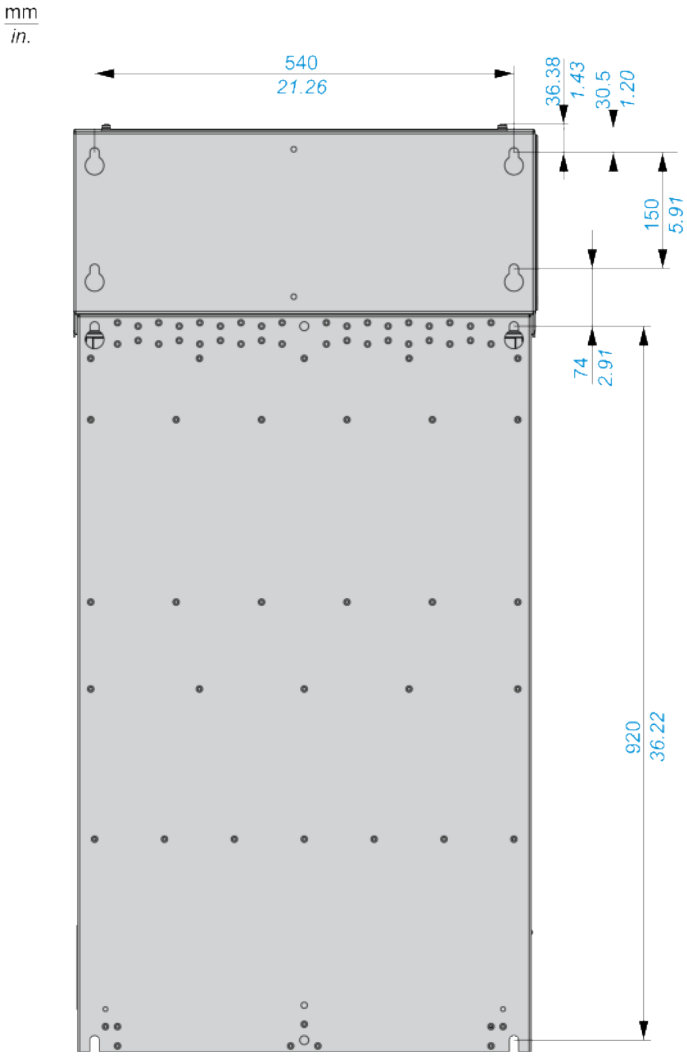

Weights

Catalog Number	Weight in kg (lb)
ATV930C25N4C, ATV930C31N4C	203 *(448)*

Frame Size A

IP55 / UL Type 1 Drive Without Disconnect Switch - Front and Side view

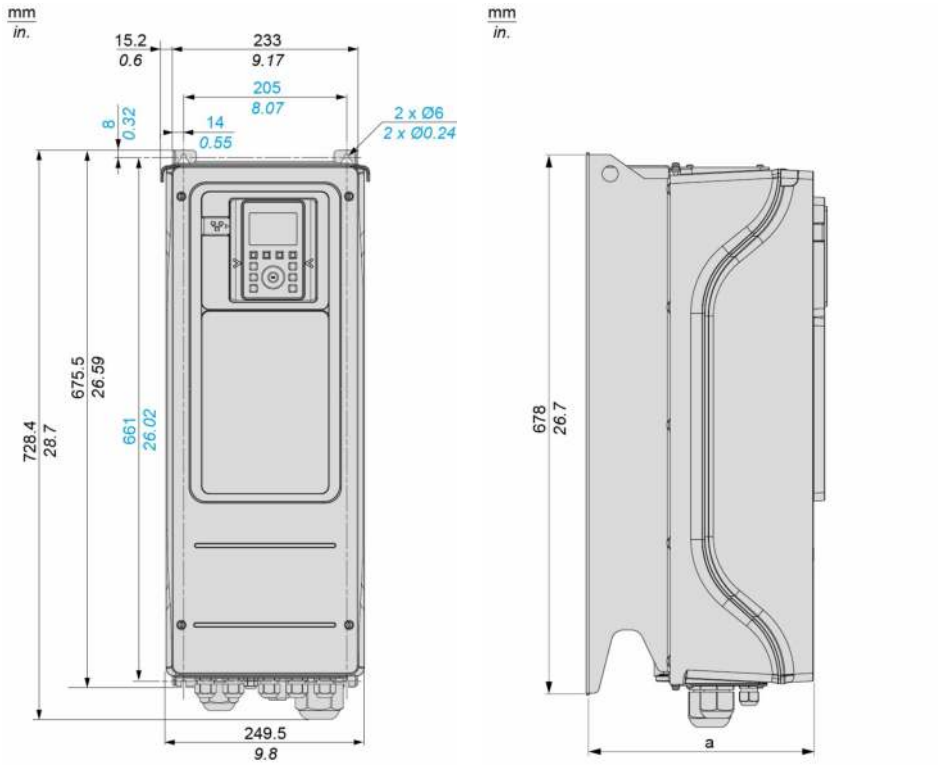

ATV950U07N4, U15N4, U22N4, U30N4, U40N4, U55N4: a = 272 mm (10.7 in.)

ATV950U75N4, D11N4, D15N4, D18N4, D22N4: a = 299 mm (11.8 in.)

IP55 / UL Type 1 Drive With Disconnect Switch - Front and Side view

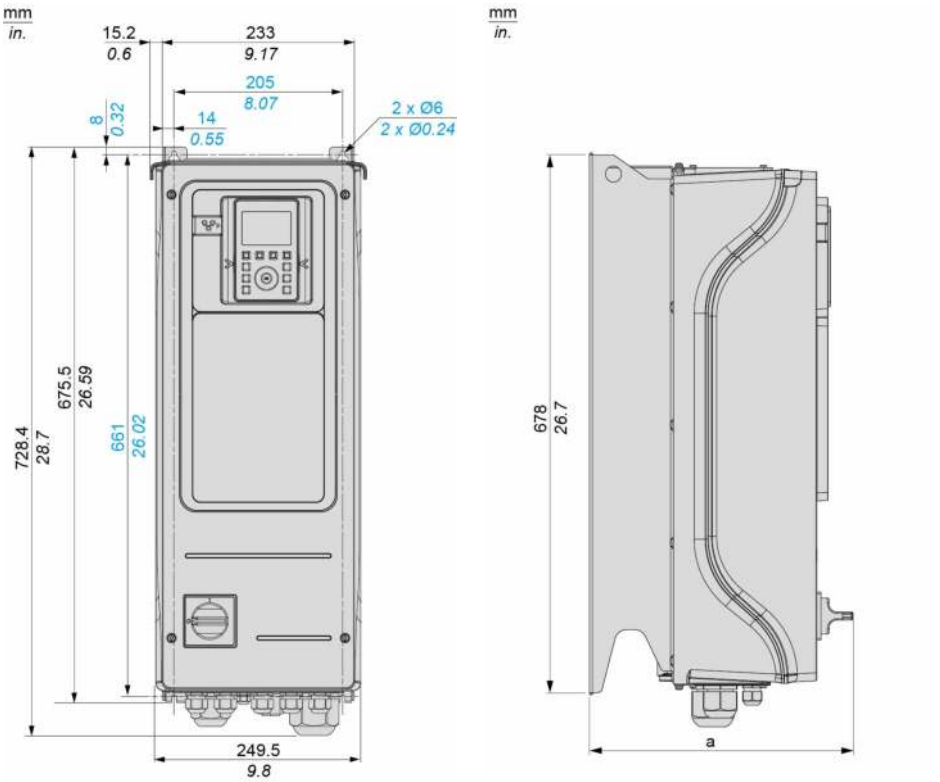

ATV950U07N4E, U15N4E, U22N4E, U30N4E, U40N4E, U55N4E: a = 300 mm (11.8 in.)

ATV950U75N4E, D11N4E, D15N4E, D18N4E, D22N4E: a = 330 mm (13 in.)

Weights

Catalog Number	Weight in kg (lb)
ATV950U07N4•...ATV950U22N4•	10.5 (23.1)
ATV950U30N4•, ATV950U40N4•	10.6 (23.4)
ATV950U55N4•	10.7 (23.6)
ATV950U75N4•, ATV950D11N4•	13.7 (30.2)
ATV950D15N4•	19.6 (43.2)
ATV950D18N4•, ATV950D22N4•	20.6 (45.4)

Frame Size B

IP55 / UL Type 1 Drive Without Disconnect Switch - Front and Side view

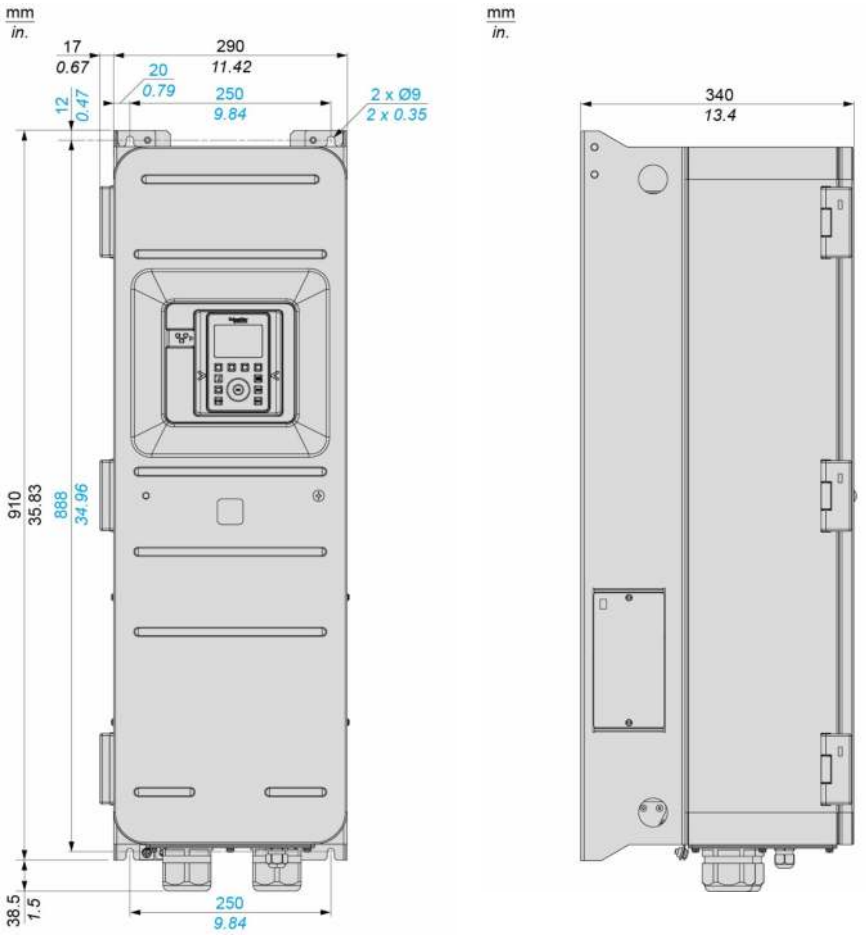

IP55 / UL Type 1 Drive With Disconnect Switch - Front and Side view

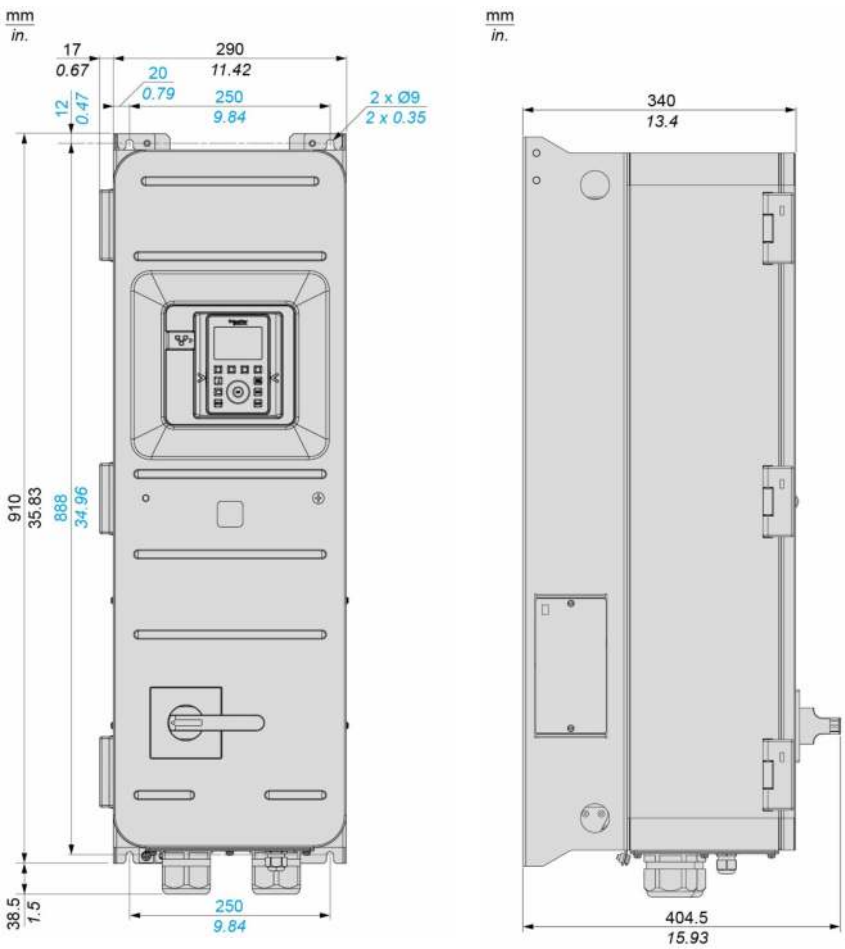

Weights

Catalog Number	Weight in kg (lb)
ATV950D30N4...ATV950D45N4	50 (110.2)
ATV950D30N4E...ATV950D45N4E	52 (114.6)

Frame Size C

IP55 / UL Type 1 Drive Without Disconnect Switch - Front and Side view

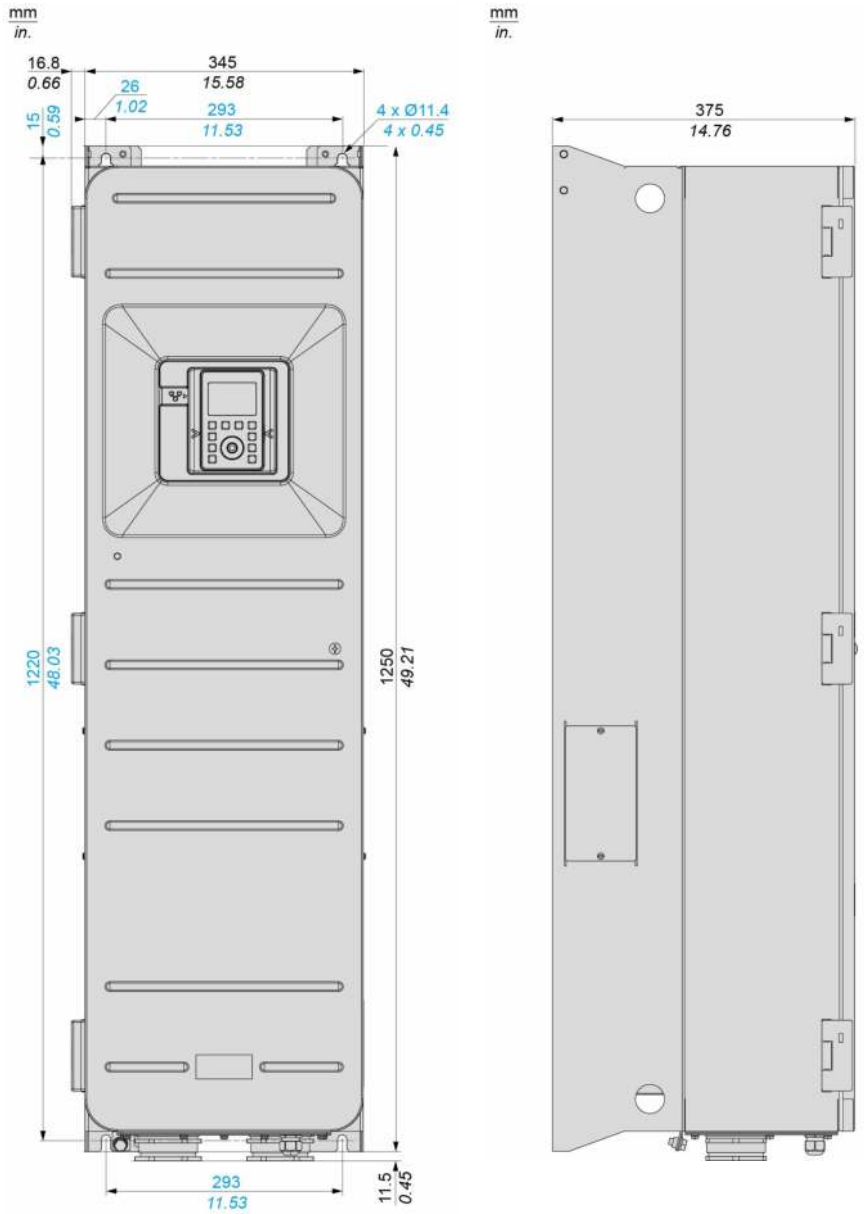

IP55 / UL Type 1 Drive With Disconnect Switch - Front and Side view

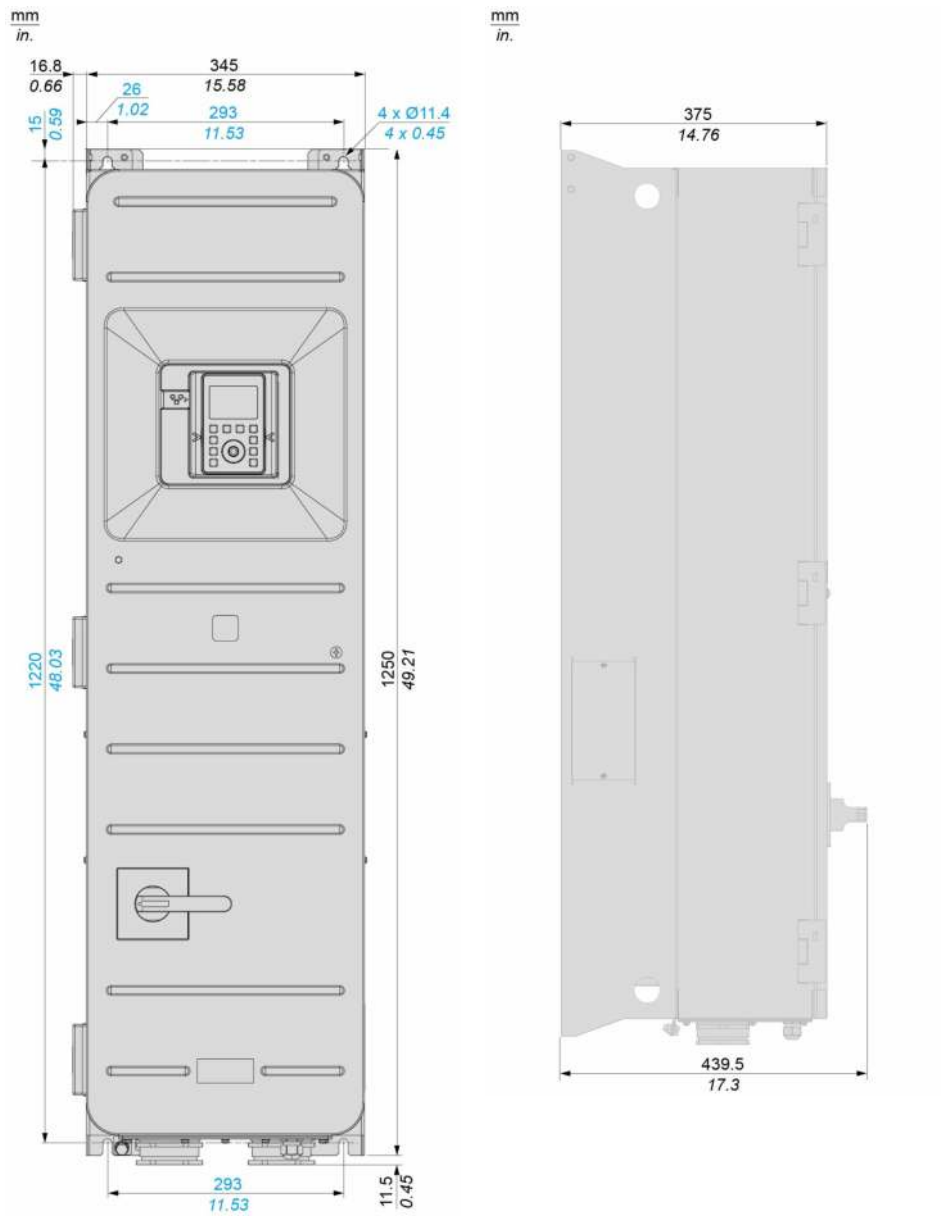

Weights

Catalog Number	Weight in kg (lb)
ATV950D55N4...ATV950D75N4	87.8 (193.6)
ATV950D55N4E...ATV950D75N4E	90.1 (198.6)
ATV950D90N4	88.5 (195.1)
ATV950D90N4E	90.8 (200.2)

Floor Standing - Frame Size FS1 and FSA

IP 21 Drives - Side and Front View

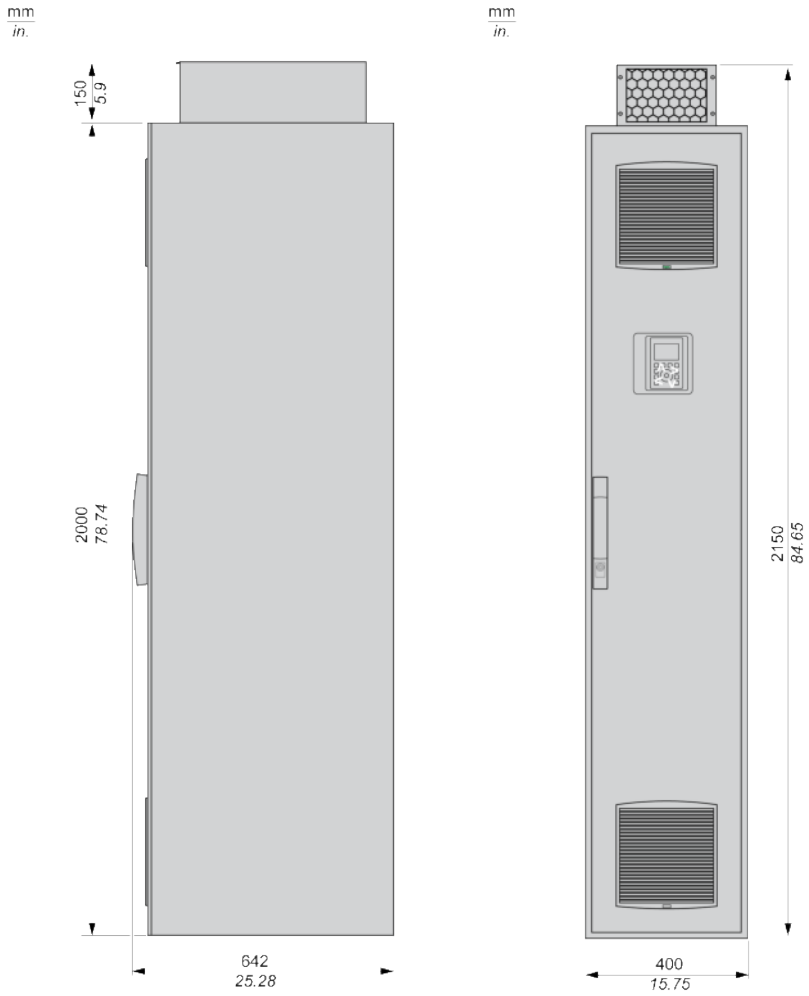

IP 54 Drives - Side and Front View

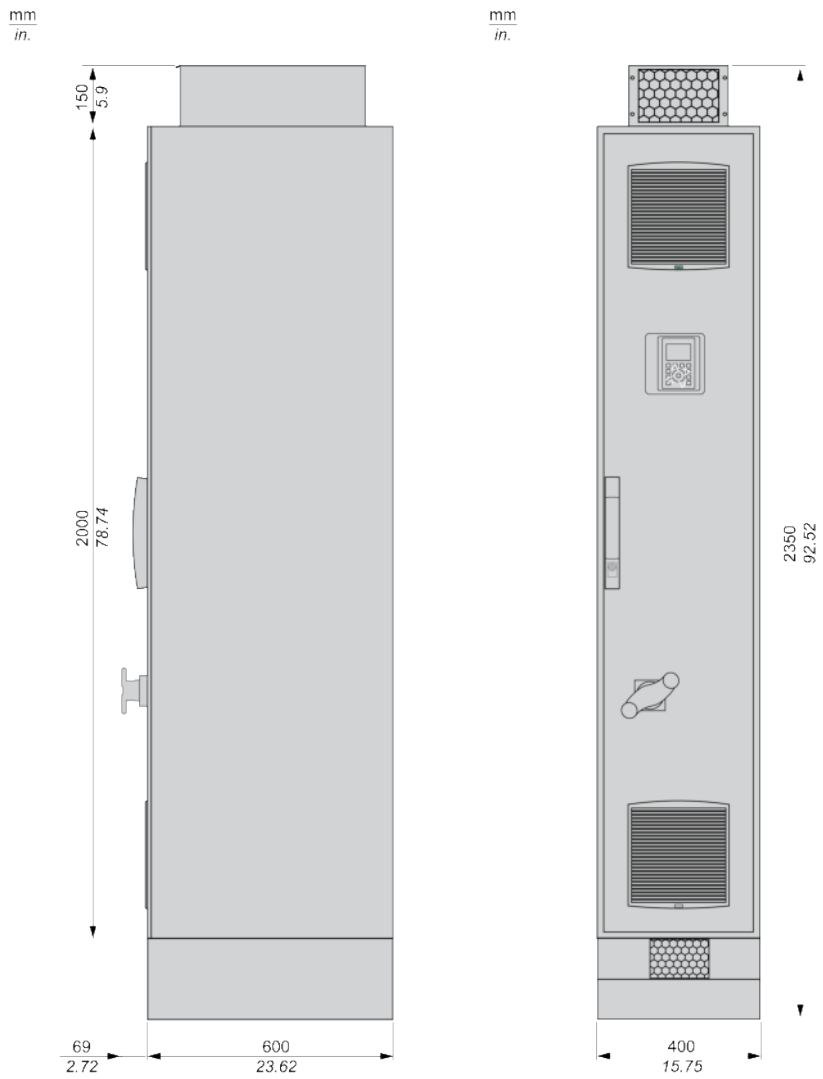

Weights

Catalog Number	Weight in kg (lb)
ATV930C11N4F...ATV930C16N4F	300 (661.4)
ATV950C11N4F...ATV950C16N4F	310 (683.4)

Floor Standing - Frame Size FS2 and FSB

IP 21 Drives - Side and Front View

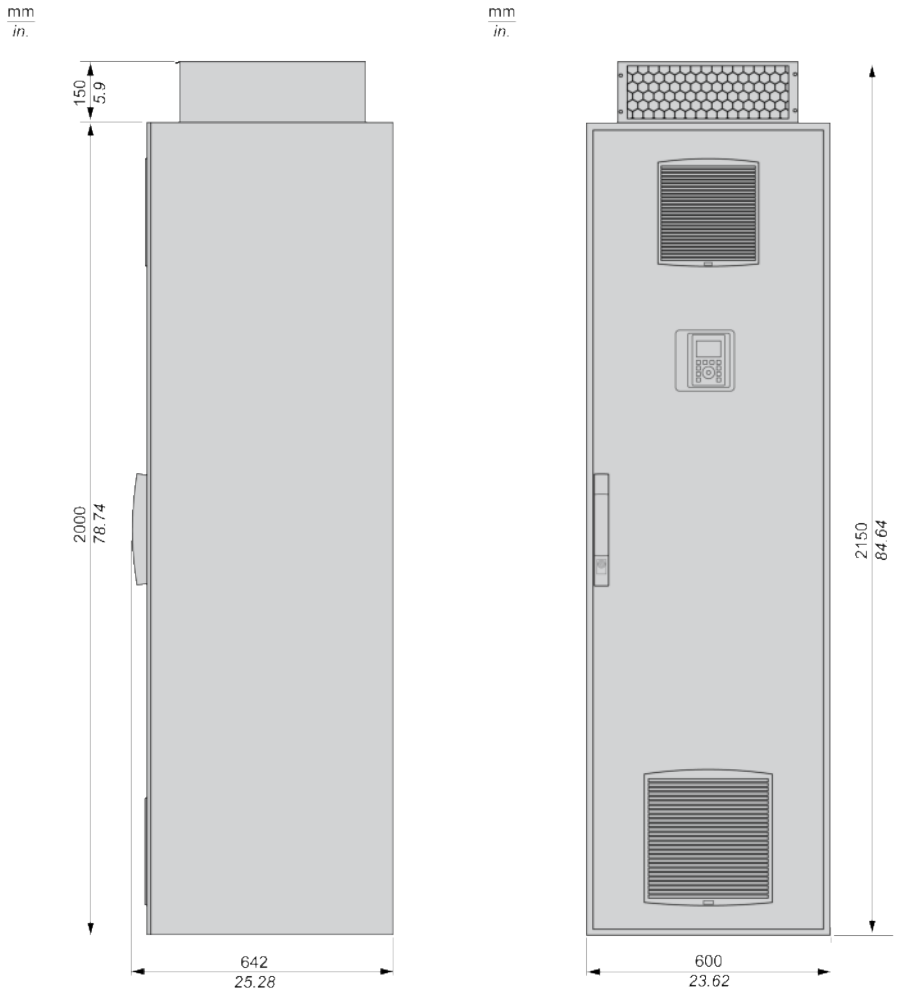

IP 54 Drives - Side and Front View

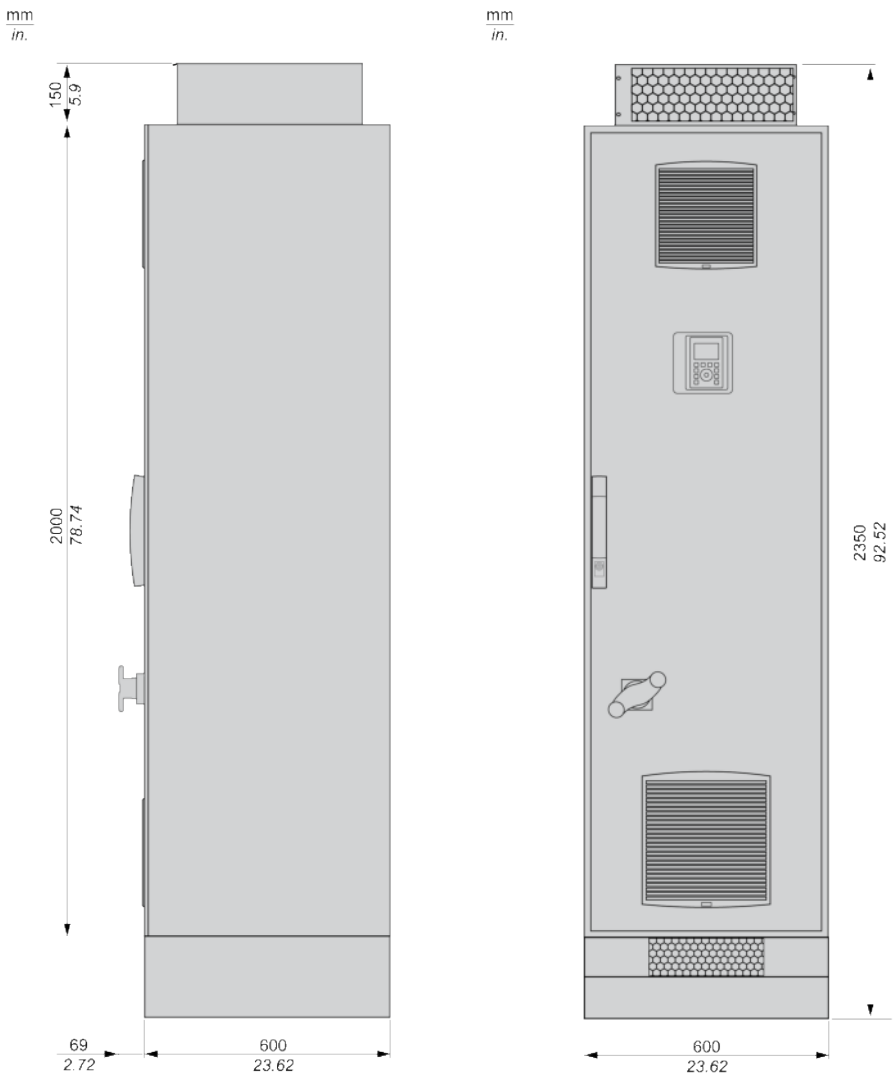

Weights

Catalog Number	Weight in kg (lb)
ATV930C20N4F...ATV930C31N4F	400 (882)
ATV950C20N4F...ATV950C31N4F	420 (926)

Electrical Data - Drive Ratings

What's in This Chapter

Drive Ratings In Normal Duty 74
Drive Ratings In Heavy Duty 82
Braking Resistors 90

Drive Ratings In Normal Duty

Normal Duty

Normal duty values are given for applications requiring a slight overload (up to 120 %).

NOTE:

- For fuse and circuit-breaker ratings refer to the information provided in the Altivar Process ATV900 Getting Started Annex (SCCR) for UL/CSA compliance and also in the Electrical Data - Upstream Protective Device, page 92 for IEC compliance.
- For motor overload and drive thermal monitoring functions, refer to the ATV900 Programming manual.

IP20 on Upper Part, IP00 on Lower Part Products and IP21 / UL Type 1 Products

3-Phase Power Part Supply 200(–15%)…240 Vac(+10%) 50/60 Hz

Power and Current Ratings

Catalog Number and Frame Size [•]		Nominal Power (1)		Power Part Supply				Drive (output)	
				Max. Input Current		Apparent Power	Max. Inrush Current (2)	Nominal Current (1)	Max. Transient current (1) (3)
				At 200 Vac	At 240 Vac				
		kW	HP	A	A	kVA	A	A	A
ATV930U07M3	[1]	0.75	1	3	2.6	1.1	4.3	4.6	5.5
ATV930U15M3	[1]	1.5	2	5.9	5	2.1	4.3	8	9.6
ATV930U22M3	[1]	2.2	3	8.4	7.2	3.0	4.3	11.2	13.4
ATV930U30M3	[1]	3	-	11.5	9.9	4.1	17.5	13.7	16.4
ATV930U40M3	[1]	4	5	15.1	12.9	5.4	17.6	18.7	22.4
ATV930U55M3	[2]	5.5	7 1/2	20.2	17.1	7.1	30.9	25.4	30.5
ATV930U75M3	[3]	7.5	10	27.1	22.6	9.4	39.3	32.7	39.2
ATV930D11M3	[3]	11	15	39.3	32.9	13.7	39.3	46.8	56.2
ATV930D15M3	[4]	15	20	52.6	45.5	18.9	64.6	63.4	76.1
ATV930D18M3	[4]	18.5	25	66.7	54.5	22.7	71.3	78.4	94.1
ATV930D22M3	[4]	22	30	76	64.3	26.7	70.9	92.6	111.1
ATV930D30M3•	[5]	30	40	104.7	88.6	36.8	133.3	123	147.6
ATV930D37M3•	[5]	37	50	128	107.8	44.8	133.3	149	178.8
ATV930D45M3•	[5]	45	60	155.1	130.4	54.2	175	176	211.2
ATV930D55M3C	[6]	55	75	189	161	61.1	168.2	211	253.2
ATV930D75M3C	[6]	75	100	256	215	83.7	168.2	282	338.4

(1) The switching frequency is adjustable:
- From 2...12 kHz for drive frame sizes 1 to 4, rated value: 4 kHz
- From 1...8 kHz for drive frame sizes 5 and 6, rated value: 2.5 kHz

For operation at switching frequencies higher than the rated value. Derating must be applied to the drive (output) current, page 129. In this case, switching frequency can be reduced if an excessive temperature rise occurs.

(2) Peak current when power is switched on, for the maximum supply mains voltage.

(3) The drive is designed to run up to 60 s at 120% of nominal current.

IP20 on Upper Part, IP00 on Lower Part Products / IP21 / UL Type 1 Products

3-Phase Power Part Supply 380(–15%)…480 Vac(+10%) 50/60 Hz

Power and Current Ratings

Catalog Number and Frame Size [•] (4)		Nominal Power (1)		Power Part Supply				Drive (output)	
				Max. Input Current		Apparent Power	Max. Inrush Current (2)	Nominal Current (1)	Max. Transient current (1) (3)
				At 380 Vac	At 480 Vac				
		kW	HP	A	A	kVA	A	A	A
ATV930U07N4	[1]	0.75	1	1.5	1.3	1.1	8	2.2	2.6
ATV930U15N4	[1]	1.5	2	3	2.6	2.2	8.3	4	4.8
ATV930U22N4	[1]	2.2	3	4.3	3.8	3.2	8.4	5.6	6.7
ATV930U30N4	[1]	3	-	5.8	5.1	4.2	31.5	7.2	8.6
ATV930U40N4	[1]	4	5	7.6	6.7	5.6	32.2	9.3	11.2
ATV930U55N4	[1]	5.5	7 1/2	10.4	9.1	7.6	33.2	12.7	15.2
ATV930U75N4	[2]	7.5	10	13.8	11.9	9.9	39.9	16.5	19.8
ATV930D11N4	[2]	11	15	19.8	17	14.1	40.4	23.5	28.2
ATV930D15N4	[3]	15	20	27	23.3	19.4	74.5	31.7	38.0
ATV930D18N4	[3]	18.5	25	33.4	28.9	24	75.5	39.2	47.0
ATV930D22N4	[3]	22	30	39.6	34.4	28.6	76	46.3	55.6
ATV930D30N4	[4]	30	40	53.3	45.9	38.2	83	61.5	73.8
ATV930D37N4	[4]	37	50	66.2	57.3	47.6	92	74.5	89.4
ATV930D45N4	[4]	45	60	79.8	69.1	57.4	110	88	105.6
ATV930D55N4•	[5]	55	75	97.2	84.2	70	176	106	127.2
ATV930D75N4•	[5]	75	100	131.3	112.7	93.7	187	145	174.0
ATV930D90N4•	[5]	90	125	156.2	135.8	112.9	236	173	207.6
ATV930C11N4•	[6]	110	150	201	165	121.8	325	211	253.0
ATV930C13N4•	[6]	132	200	237	213	161.4	325	250	300.0
ATV930C16N4•	[6]	160	250	284	262	201.3	325	302	362.0
ATV930C22N4•	[7A]	220	350	397	324	247	426	427	512
ATV930C25N4C	[7B]	250	400	451	366	279	450	481	577
ATV930C31N4C	[7B]	315	500	569	461	351	615	616	739

(1) The switching frequency is adjustable:
- From 2...12 kHz for drive frame sizes 1 to 4, rated value: 4 kHz
- From 1...8 kHz for drive frame sizes 5 to 7, rated value: 2.5 kHz

For operation at switching frequencies higher than the rated value. Derating must be applied to the drive (output) current, page 129. In this case, switching frequency can be reduced if an excessive temperature rise occurs.

(2) Peak current when power is switched on, for the maximum supply mains voltage.

(3) The drive is designed to run up to 60 s at 120% of nominal current.

(4) Size 1...5 drives: Including catalog numbers ATV930•••N4Z.

IP20/IP21 / UL Type 1 Products 3-Phase Power Part Supply 600 Vac 50/60 Hz

3-Phase Power Part Supply 600 Vac(–15%…+10%) 50/60 Hz

NOTICE

OVERLOAD

Install properly rated line chokes upstream of S6X drives.

Failure to follow these instructions can result in equipment damage.

Power And Current Ratings

Catalog Number and Frame Size [•]		Nominal Power (1)	Power Part Supply				Drive (output)	
			Max. Input Current At 600 Vac	Line choke (4)	Apparent Power	Max. Inrush Current (2)	Nominal Current (1)	Max. Transient current (1) (3)
		HP	A	mH	kVA	A	A	A
ATV930U22S6X	[2]	3	2.9	10	3.0	46	4.2	5
ATV930U40S6X	[2]	5	5.3	4	5.5	46	7.2	8.6
ATV930U55S6X	[2]	7 1/2	7	4	7.3	46	9.5	11.4
ATV930U75S6X	[2]	10	9.9	2	10.3	46	13.5	16.2
ATV930D11S6X	[2]	15	15.3	1	15.9	46	18	21.6
ATV930D15S6X	[2]	20	19.6	1	20.4	46	22	26.4
ATV930D18S6	[3S]	25	23.2	N/A	24.1	35	27	33.0
ATV930D22S6	[3S]	30	26.9	N/A	28.0	35	34	40.5
ATV930D30S6	[5S]	40	40.6	N/A	42.2	115	41.5	51.0
ATV930D37S6	[5S]	50	47.1	N/A	48.9	115	52	62.3
ATV930D45S6	[5S]	60	55.1	N/A	57.3	115	62	78.0
ATV930D55S6	[5S]	75	70.1	N/A	72.9	115	83	93.0
ATV930D75S6	[5S]	100	89.4	N/A	92.9	115	100	124.5

(1) The switching frequency is adjustable:
- From 2...12 kHz for drive frame size 2, rated value: 4 kHz
- From 2...6 kHz for drive frame size 3S, rated value: 4 kHz
- From 1...4.9 kHz for drive frame size 5S, rated value: 2.5 kHz

For operation at switching frequencies higher than the rated value. Derating must be applied to the drive (output) current, page 129. In this case, switching frequency can be reduced if an excessive temperature rise occurs.

(2) Peak current when power is switched On, for the maximum supply mains voltage.

(3) The drive is designed to run up to 60 s at 120% of nominal current.

(4) ATV930•••S6X can only be used with a line choke.

IP20 on Upper Part, IP00 on Lower Part Products

3-Phase Power Part Supply 500(–15%)…690 Vac(+10%) 50/60 Hz

Power And Current Ratings At Minimum Supply Voltage

Catalog Number and Frame Size [•]		Nominal Power (1)		Power Part Supply	Drive (output)	
				Max. Input Current	Nominal Current (1)	Max. Transient current (1) (3)
		At 500 Vac		At 500 Vac		
		kW	HP	A	A	A
ATV930U22Y6	[3Y]	1.5	2	3.4	3.1	3.7
ATV930U30Y6	[3Y]	2.2	3	4.7	4.2	5.0
ATV930U40Y6	[3Y]	3	-	6.2	5.4	6.5
ATV930U55Y6	[3Y]	4	5	7.9	7.2	8.6
ATV930U75Y6	[3Y]	5.5	7 1/2	10.4	9.5	11.4
ATV930D11Y6	[3Y]	7.5	10	13.6	13.5	16.2
ATV930D15Y6	[3Y]	11	15	18.4	18	21.6
ATV930D18Y6	[3Y]	15	20	23.1	24	28.8
ATV930D22Y6	[3Y]	18.5	25	27.6	29	34.8
ATV930D30Y6	[3Y]	22	30	32.1	34	40.8
ATV930D37Y6	[5Y]	30	40	47.2	45	54.0
ATV930D45Y6	[5Y]	37	50	55.6	55	66.0
ATV930D55Y6	[5Y]	45	60	65.5	66	79.2
ATV930D75Y6	[5Y]	55	75	82.7	83	99.6
ATV930D90Y6	[5Y]	75	100	108.3	108	129.6

(1) The switching frequency is adjustable:
- From 2...6 kHz for drive frame size 3Y, rated value: 4 kHz
- From 1...4.9 kHz for drive frame size 5Y, rated value: 2.5 kHz

For operation at switching frequencies higher than the rated value. Derating must be applied to the drive (output) current, page 129. In this case, switching frequency can be reduced if an excessive temperature rise occurs.

(2) Peak current when power is switched On, for the maximum supply mains voltage.

(3) The drive is designed to run up to 60 s at 120% of nominal current.

Power And Current Ratings At Maximum Supply Voltage

Catalog Number and Frame Size [•]		Nominal Power (1)		Power Part Supply			Drive (output)	
				Max. Input Current	Apparent Power	Max. Inrush Current (2)	Nominal Current (1)	Max. Transient current (1) (3)
		At 690 Vac		At 690 Vac	At 690 Vac	At 690 Vac		
		kW	HP	A	A	A	A	A
ATV930U22Y6	[3Y]	2.2	3	3.6	4.3	35	3.1	3.7
ATV930U30Y6	[3Y]	3	-	4.8	5.7	35	4.2	5.0
ATV930U40Y6	[3Y]	4	5	6.1	7.3	35	5.4	6.5
ATV930U55Y6	[3Y]	5.5	7 1/2	8	9.6	35	7.2	8.6
ATV930U75Y6	[3Y]	7.5	10	10.5	12.5	35	9.5	11.4
ATV930D11Y6	[3Y]	11	15	14.7	17.6	35	13.5	16.2
ATV930D15Y6	[3Y]	15	20	19.2	22.9	35	18	21.6
ATV930D18Y6	[3Y]	18.5	25	23	27.5	35	24	28.8
ATV930D22Y6	[3Y]	22	30	26	31.1	35	29	34.8
ATV930D30Y6	[3Y]	30	40	32.8	39.2	35	34	40.8
ATV930D37Y6	[5Y]	37	50	46.2	55.2	115	45	54.0
ATV930D45Y6	[5Y]	45	60	54.4	65.0	115	55	66.0
ATV930D55Y6	[5Y]	55	75	62.5	74.7	115	66	79.2
ATV930D75Y6	[5Y]	75	100	87.7	104.8	115	83	99.6
ATV930D90Y6	[5Y]	90	125	99.4	118.8	115	108	129.6

(1) The switching frequency is adjustable:
- From 2...6 kHz for drive frame size 3Y, rated value: 4 kHz
- From 1...4.9 kHz for drive frame size 5Y, rated value: 2.5 kHz

For operation at switching frequencies higher than the rated value. Derating must be applied to the drive (output) current, page 129. In this case, switching frequency can be reduced if an excessive temperature rise occurs.

(2) Peak current when power is switched On, for the maximum supply mains voltage.

(3) The drive is designed to run up to 60 s at 120% of nominal current.

IP21 Products - Floor standing

3-Phase Power Part Supply 380(–15%)…440 Vac(+10%) 50/60 Hz

Power and Current Ratings

Catalog Number	Nominal Power (1)	Power Part Supply				Drive (output)	
		Max. Input Current		Apparent Power	Max. Inrush Current (2)	Nominal Current (1)	Max. Transient current (1) (3)
		At 380 Vac	At 440 Vac				
	kW	A	A	kVA	A	A	A
ATV930C11N4F	110	207	179	136	187	211	253
ATV930C13N4F	132	244	210	160	187	250	300
ATV930C16N4F	160	291	251	191	187	302	362
ATV930C20N4F	200	369	319	243	345	370	444
ATV930C25N4F	250	453	391	298	345	477	572
ATV930C31N4F	315	566	488	372	345	590	708

(1) The switching frequency is adjustable from 2...8 kHz with a rated value of 2.5 kHz

For operation at switching frequencies higher than the rated value. Derating must be applied to the drive (output) current, page 129. In this case, switching frequency can be reduced if an excessive temperature rise occurs.

(2) Peak current when power is switched on, for the maximum supply mains voltage.

(3) The drive is designed to run up to 60 s at 120% of nominal current.

IP55 / UL Type 1 Products

3-Phase Power Part Supply 380(–15%)…480 Vac(+10%) 50/60 Hz

Power and Current Ratings

Catalog Number and Frame Size [•] (4)		Nominal Power (1)		Power Part Supply				Drive (output)	
				Max. Input Current		Apparent Power	Max. Inrush Current (2)	Nominal Current (1)	Max. Transient current (1) (3)
				At 380 Vac	At 480 Vac				
		kW	HP	A	A	kVA	A	A	A
ATV950U07N4•	[A]	0.75	1	1.5	1.3	1.1	8	2.2	2.6
ATV950U15N4•	[A]	1.5	2	3	2.6	2.2	8.3	4	4.8
ATV950U22N4•	[A]	2.2	3	4.3	3.8	3.2	8.4	5.6	6.7
ATV950U30N4•	[A]	3	-	5.8	5.1	4.2	31.5	7.2	8.6
ATV950U40N4•	[A]	4	5	7.6	6.7	5.6	32.2	9.3	11.2
ATV950U55N4•	[A]	5.5	7 1/2	10.4	9.1	7.6	33.2	12.7	15.2
ATV950U75N4•	[A]	7.5	10	13.8	11.9	9.9	39.9	16.5	19.8
ATV950D11N4•	[A]	11	15	19.8	17	14.1	40.4	23.5	28.2
ATV950D15N4•	[A]	15	20	27	23.3	19.4	74.5	31.7	38.0
ATV950D18N4•	[A]	18.5	25	33.4	28.9	24	75.5	39.2	47.0
ATV950D22N4•	[A]	22	30	39.6	34.4	28.6	76	46.3	55.6
ATV950D30N4•	[B]	30	40	53.3	45.9	38.2	83	61.5	73.8
ATV950D37N4•	[B]	37	50	66.2	57.3	47.6	92	74.5	89.4
ATV950D45N4•	[B]	45	60	79.8	69.1	57.4	110	88	105.6
ATV950D55N4•	[C]	55	75	97.2	84.2	70	176	106	127.2
ATV950D75N4•	[C]	75	100	131.3	112.7	93.7	187	145	174
ATV950D90N4•	[C]	90	125	156.2	135.8	112.9	236	173	207.6

(1) The switching frequency is adjustable:
- From 2...12 kHz for drive frame sizes A and B, rated value: 4 kHz
- From 2...8 kHz for drive frame size C, rated value: 2.5 kHz

For operation at switching frequencies higher than the rated value. Derating must be applied to the drive (output) current, page 129. In this case, switching frequency can be reduced if an excessive temperature rise occurs.

(2) Peak current when power is switched on, for the maximum supply mains voltage.

(3) The drive is designed to run up to 60 s at 120% of nominal current.

(4) Size 1...5 drives: Including catalog numbers ATV930•••N4Z.

IP54 Products - Floor standing

3-Phase Power Part Supply 380(–15%)…440 Vac(+10%) 50/60 Hz

Power and Current Ratings

Catalog Number	Nominal Power (1)	Power Part Supply				Drive (output)	
		Max. Input Current		Apparent Power	Max. Inrush Current (2)	Nominal Current (1)	Max. Transient current (1) (3)
		At 380 Vac	At 440 Vac				
	kW	A	A	kVA	A	A	A
ATV950C11N4F	110	207	176	136	187	211	253
ATV950C13N4F	132	244	210	160	187	250	300
ATV950C16N4F	160	291	251	191	187	302	362
ATV950C20N4F	200	369	319	243	345	370	444
ATV950C25N4F	250	453	391	298	345	477	572
ATV950C31N4F	315	566	488	372	345	590	708

(1) The switching frequency is adjustable from 2...8 kHz with a rated value of 2.5 kHz

For operation at switching frequencies higher than the rated value. Derating must be applied to the drive (output) current, page 129. In this case, switching frequency can be reduced if an excessive temperature rise occurs.

(2) Peak current when power is switched on, for the maximum supply mains voltage.

(3) The drive is designed to run up to 60 s at 120% of nominal current.

Floor Standing Drives - Fuse and Circuit-breaker Ratings

Catalog Number	Nominal Power	Upstream Cables		Internal Circuits
		gG Class Pre-fuse	Circuit-breaker I_{therm}	aR fuse
	kW	A	A	A
ATV9•0C11N4F	110	250	230	250
ATV9•0C13N4F	132	300	280	315
ATV9•0C16N4F	160	315	315	350
ATV9•0C20N4F	200	400	400	2 x 250
ATV9•0C25N4F	250	500	500	2 x 315
ATV9•0C31N4F	315	630	630	2 x 400

Drive Ratings In Heavy Duty

Heavy Duty

Heavy-duty values are given for applications requiring a significant overload (up to 150 %).

NOTE:

- For fuse and circuit-breaker ratings refer to the information provided in the Altivar Process ATV900 Getting Started Annex (SCCR) for UL/CSA compliance and also in the Electrical Data - Upstream Protective Device, page 92 for IEC compliance.
- Refer to the ATV900 Programming manual for motor overload and drive thermal monitoring functions.

IP20 on Upper Part, IP00 on Lower Part Products and IP21 / UL Type 1 Products

3-Phase Power Part Supply 200(–15%)…240 Vac(+10%) 50/60 Hz

Power And Current Ratings

Catalog Number and Frame Size [•]		Nominal Power (1)		Power Part Supply				Drive (output)	
				Max. Input Current		Apparent Power	Max. Inrush Current (2)	Nominal Current (1)	Max. Transient current (1) (3)
				At 200 Vac	At 240 Vac				
		kW	HP	A	A	kVA	A	A	A
ATV930U07M3	[1]	0.37	1/2	1.7	1.5	0.6	4.3	3.3	5
ATV930U15M3	[1]	0.75	1	3.3	3	1.2	4.3	4.6	6.9
ATV930U22M3	[1]	1.5	2	6	5.3	2.2	4.3	8	12
ATV930U30M3	[1]	2.2	3	8.7	7.6	3.2	17.5	11.2	16.8
ATV930U40M3	[1]	3	–	11.7	10.2	4.2	17.6	13.7	20.6
ATV930U55M3	[2]	4	5	15.1	13	5.4	30.9	18.7	28.1
ATV930U75M3	[3]	5.5	7 1/2	20.1	16.9	7	39.3	25.4	38.1
ATV930D11M3	[3]	7.5	10	27.2	23.1	9.6	39.3	32.7	49.1
ATV930D15M3	[4]	11	15	40.1	34.3	14.3	64.6	46.8	70.2
ATV930D18M3	[4]	15	20	53.1	44.9	18.7	71.3	63.4	95.1
ATV930D22M3	[4]	18.5	25	64.8	54.5	22.7	70.9	78.4	117.6
ATV930D30M3•	[5]	22	30	78.3	67.1	27.9	133.3	92.6	138.9
ATV930D37M3•	[5]	30	40	104.7	88.6	36.8	133.3	123	184.5
ATV930D45M3•	[5]	37	50	128.5	108.5	45.1	175	149	223.5
ATV930D55M3C	[6]	45	60	156	134	50	168.2	176	264
ATV930D75M3C	[6]	55	75	189	161	61.1	168.2	211	316.5

(1) The switching frequency is adjustable:
- From 2...12 kHz for drive frame sizes 1 to 4, rated value: 4 kHz
- From 1...8 kHz for drive frame sizes 5 and 6, rated value: 2.5 kHz

For operation at switching frequencies higher than the rated value. Derating must be applied to the drive (output) current, page 129. In this case, switching frequency can be reduced if an excessive temperature rise occurs.

(2) Peak current when power is switched on, for the maximum supply mains voltage.

(3) The drive is designed to run up to 60 s at 150% of nominal current.

IP20 on Upper Part, IP00 on Lower Part Products and IP21 / UL Type 1 Products

3-Phase Power Part Supply 380(–15%)…480 Vac(+10%) 50/60 Hz

Power And Current Ratings

Catalog Number and Frame Size [•] (4)		Nominal Power (1)		Power Part Supply				Drive (output)	
				Max. Input Current		Apparent Power	Max. Inrush Current (2)	Nominal Current (1)	Max. Transient current (1) (3)
				At 380 Vac	At 480 Vac				
		kW	HP	A	A	kVA	A	A	A
ATV930U07N4	[1]	0.37	1/2	0.9	0.8	0.7	8	1.5	2.3
ATV930U15N4	[1]	0.75	1	1.7	1.5	1.2	8.3	2.2	3.3
ATV930U22N4	[1]	1.5	2	3.1	2.9	2.4	8.4	4	6
ATV930U30N4	[1]	2.2	3	4.5	4.0	3.3	31.5	5.6	8.4
ATV930U40N4	[1]	3	-	6.0	5.4	4.5	32.2	7.2	10.8
ATV930U55N4	[1]	4	5	8	7.2	6.0	33.2	9.3	14
ATV930U75N4	[2]	5.5	7 1/2	10.5	9.2	7.6	39.9	12.7	19.1
ATV930D11N4	[2]	7.5	10	14.1	12.5	10.4	40.4	16.5	24.8
ATV930D15N4	[3]	11	15	20.6	18.1	15	74.5	23.5	35.3
ATV930D18N4	[3]	15	20	27.7	24.4	20.3	75.5	31.7	47.6
ATV930D22N4	[3]	18.5	25	34.1	29.9	24.9	76	39.2	58.8
ATV930D30N4	[4]	22	30	40.5	35.8	29.8	83	46.3	69.5
ATV930D37N4	[4]	30	40	54.8	48.3	40.2	92	61.5	92.3
ATV930D45N4	[4]	37	50	67.1	59	49.1	110	74.5	111.8
ATV930D55N4•	[5]	45	60	81.4	71.8	59.7	176	88	132
ATV930D75N4•	[5]	55	75	98.9	86.9	72.2	187	106	159
ATV930D90N4•	[5]	75	100	134.3	118.1	98.2	236	145	217.5
ATV930C11N4•	[6]	90	125	170	143	102.6	325	173	259.5
ATV930C13N4•	[6]	110	150	201	165	121.8	325	211	317
ATV930C16N4•	[6]	132	200	237	213	161.4	325	250	375
ATV930C22N4•	[7A]	160	250	296	246	187	426	302	453
ATV930C25N4C	[7B]	200	300	365	301	229	450	387	581
ATV930C31N4C	[7B]	250	400	457	375	286	615	481	722

(1) The switching frequency is adjustable:
- From 2...12 kHz for drive frame sizes 1 to 4, rated value: 4 kHz
- From 1...8 kHz for drive frame sizes 5 to 7, rated value: 2.5 kHz

For operation at switching frequencies higher than the rated value. Derating must be applied to the drive (output) current, page 129. In this case, switching frequency can be reduced if an excessive temperature rise occurs.

(2) Peak current when power is switched on, for the maximum supply mains voltage.

(3) The drive is designed to run up to 60 s at 150% of nominal current.

(4) Size 1...5 drives: Including catalog numbers ATV930•••N4Z.

IP21 / UL Type 1 Products

3-Phase Power Part Supply 600 Vac (–15%...+10%) 50/60 Hz

NOTICE

OVERLOAD

Install properly rated line chokes upstream of S6X drives.

Failure to follow these instructions can result in equipment damage.

Power And Current Ratings

Catalog Number and Frame Size [•]		Nominal Power (1)	Power Part Supply				Drive (output)	
			Max. Input Current At 600 Vac	Line choke (4)	Apparent Power	Max. Inrush Current (2)	Nominal Current (1)	Max. Transient current (1) (3)
		HP	A	mH	kVA	A	A	A
ATV930U22S6X	[2]	2	2.1	10	2.2	46	3.1	4.7
ATV930U40S6X	[2]	3	3.3	4	3.4	46	4.2	6.3
ATV930U55S6X	[2]	5	5.3	4	5.5	46	7.2	10.8
ATV930U75S6X	[2]	7 1/2	7.7	2	8.0	46	9.5	14.3
ATV930D11S6X	[2]	10	11.1	1	11.5	46	13.5	20.3
ATV930D15S6X	[2]	15	15.3	1	15.9	46	18	27.0
ATV930D18S6	[3S]	20	19.6	N/A	20.4	35	22	33.0
ATV930D22S6	[3S]	25	23.2	N/A	24.1	35	27	40.5
ATV930D30S6	[5S]	30	32	N/A	33.3	115	34	51.0
ATV930D37S6	[5S]	40	40.6	N/A	42.2	115	41.5	62.3
ATV930D45S6	[5S]	50	47.1	N/A	48.9	115	52	78.0
ATV930D55S6	[5S]	60	60.4	N/A	62.8	115	62	93.0
ATV930D75S6	[5S]	75	70.1	N/A	72.9	115	83	124.5

(1) The switching frequency is adjustable:
- From 2...12 kHz for drive frame size 1 and 2, rated value: 4 kHz
- From 2...6 kHz for drive frame size 3S, rated value: 4 kHz
- From 1...4.9 kHz for drive frame size 5S, rated value: 2.5 kHz

For operation at switching frequencies higher than the rated value. Derating must be applied to the drive (output) current, page 129. In this case, switching frequency can be reduced if an excessive temperature rise occurs.

(2) Peak current when power is switched On, for the maximum supply mains voltage.

(3) The drive is designed to run up to 60 s at 150% of nominal current.

(4) ATV930•••S6X can only be used with a line choke.

IP20 on Upper Part, IP00 on Lower Part Products

3-Phase Power Part Supply 500(–15%)…690 Vac(+10%) 50/60 Hz

Power And Current Ratings at Minimum Supply Voltage

Catalog Number and Frame Size [•]		Nominal Power (1)		Power Part Supply	Drive (output)	
				Max. Input Current	Nominal Current (1)	Max. Transient current (1) (3)
		At 500 Vac		At 500 Vac		
		kW	HP	A	A	A
ATV930U22Y6	[3Y]	1.1	1 1/2	2.6	2.4	3.6
ATV930U30Y6	[3Y]	1.5	2	3.4	3.1	4.7
ATV930U40Y6	[3Y]	2.2	3	4.7	4.2	6.3
ATV930U55Y6	[3Y]	3	-	6.2	5.4	8.1
ATV930U75Y6	[3Y]	4	5	7.9	7.2	10.8
ATV930D11Y6	[3Y]	5.5	7 1/2	10.4	9.5	14.3
ATV930D15Y6	[3Y]	7.5	10	13.6	13.5	20.3
ATV930D18Y6	[3Y]	11	15	18.4	18	27.0
ATV930D22Y6	[3Y]	15	20	23.2	24	36.0
ATV930D30Y6	[3Y]	18.5	25	27.6	29	43.5
ATV930D37Y6	[5Y]	22	30	37.7	34	51.0
ATV930D45Y6	[5Y]	30	40	47.2	45	67.5
ATV930D55Y6	[5Y]	37	50	55.6	55	82.5
ATV930D75Y6	[5Y]	45	60	71	66	99.0
ATV930D90Y6	[5Y]	55	75	82.7	83	124.5

(1) The switching frequency is adjustable:
- From 2...6 kHz for drive frame size 3Y, rated value: 4 kHz
- From 1...4.9 kHz for drive frame size 5Y, rated value: 2.5 kHz

For operation at switching frequencies higher than the rated value. Derating must be applied to the drive (output) current, page 129. In this case, switching frequency can be reduced if an excessive temperature rise occurs.

(2) Peak current when power is switched On, for the maximum supply mains voltage.

(3) The drive is designed to run up to 60 s at 150% of nominal current.

Power And Current Ratings at Maximum Supply Voltage

Catalog Number and Frame Size [•]		Nominal Power (1)		Power Part Supply			Drive (output)	
				Max. Input Current	Apparent Power	Max. Inrush Current (2)	Nominal Current (1)	Max. Transient current (1) (3)
		At 690 Vac		At 690 Vac	At 690 Vac	At 690 Vac (4)		
		kW	HP	A	A	A	A	A
ATV930U22Y6	[3Y]	1.5	2	2.6	3.1	35	2.4	3.6
ATV930U30Y6	[3Y]	2.2	3	3.6	4.3	35	3.1	4.7
ATV930U40Y6	[3Y]	3	-	4.8	5.7	35	4.2	6.3
ATV930U55Y6	[3Y]	4	5	6.1	7.3	35	5.4	8.1
ATV930U75Y6	[3Y]	5.5	7 1/2	8	9.6	35	7.2	10.8
ATV930D11Y6	[3Y]	7.5	10	10.5	12.5	35	9.5	14.3
ATV930D15Y6	[3Y]	11	15	14.7	17.6	35	13.5	20.3
ATV930D18Y6	[3Y]	15	20	19.2	22.9	35	18	27.0
ATV930D22Y6	[3Y]	18.5	25	23	27.5	35	24	36.0
ATV930D30Y6	[3Y]	22	30	26	31.1	35	29	43.5
ATV930D37Y6	[5Y]	30	40	38.5	46.0	115	34	51.0
ATV930D45Y6	[5Y]	37	50	46.2	55.2	115	45	67.5
ATV930D55Y6	[5Y]	45	60	54.4	65.0	115	55	82.5
ATV930D75Y6	[5Y]	55	75	68.5	81.9	115	66	99.0
ATV930D90Y6	[5Y]	75	100	87.7	104.8	115	83	124.5

(1) The switching frequency is adjustable:
- From 2...6 kHz for drive frame size 3Y, rated value: 4 kHz
- From 1...4.9 kHz for drive frame size 5Y, rated value: 2.5 kHz

For operation at switching frequencies higher than the rated value. Derating must be applied to the drive (output) current, page 129. In this case, switching frequency can be reduced if an excessive temperature rise occurs.

(2) Peak current when power is switched On, for the maximum supply mains voltage.

(3) The drive is designed to run up to 60 s at 150% of nominal current.

IP21 Products - Floor standing

3-Phase Power Part Supply 380(–15%)…440 Vac(+10%) 50/60 Hz

Power And Current Ratings

Catalog Number	Nominal Power (1)	Power Part Supply				Drive (output)	
		Max. Input Current		Apparent Power	Max. Inrush Current (2)	Nominal Current (1)	Max. Transient current (1) (3)
		At 380 Vac	At 440 Vac				
	kW	A	A	kVA	A	A	A
ATV930C11N4F	90	174	151	115	187	173	260
ATV930C13N4F	110	207	179	136	187	211	317
ATV930C16N4F	132	244	210	160	187	250	375
ATV930C20N4F	160	302	262	200	345	302	453
ATV930C25N4F	200	369	319	243	345	370	555
ATV930C31N4F	250	453	391	298	345	477	716

(1) The switching frequency is adjustable from 2...8 kHz with a rated value of 2.5 kHz.

For operation at switching frequencies higher than the rated value. Derating must be applied to the drive (output) current, page 129. In this case, switching frequency can be reduced if an excessive temperature rise occurs.

(2) Peak current when power is switched on, for the maximum supply mains voltage.

(3) The drive is designed to run up to 60 s at 150% of nominal current.

IP55 / UL Type 1 Products

3-Phase Power Part Supply 380(–15%)…480 Vac(+10%) 50/60 Hz

Power And Current Ratings

Catalog Number and Frame Size [•] (4)		Nominal Power (1)		Power Part Supply				Drive (output)	
				Max. Input Current		Apparent Power	Max. Inrush Current (2)	Nominal current (1)	Max. transient current (1) (3)
				At 380 Vac	At 480 Vac				
		kW	HP	A	A	kVA	A	A	A
ATV950U07N4•	[A]	0.37	1/2	0.9	0.8	0.7	8.0	1.5	2.3
ATV950U15N4•	[A]	0.75	1	1.7	1.5	1.2	8.3	2.2	3.3
ATV950U22N4•	[A]	1.5	2	3.1	2.9	2.4	8.4	4	6
ATV950U30N4•	[A]	2.2	3	4.5	4.0	3.3	31.5	5.6	8.4
ATV950U40N4•	[A]	3	-	6	5.4	4.5	32.2	7.2	10.8
ATV950U55N4•	[A]	4	5	8	7.2	6.0	33.2	9.3	14
ATV950U75N4•	[A]	5.5	7 1/2	10.5	9.2	7.6	39.9	12.7	19.1
ATV950D11N4•	[A]	7.5	10	14.1	12.5	10.4	40.4	16.5	24.8
ATV950D15N4•	[A]	11	15	20.6	18.1	15	74.5	23.5	35.3
ATV950D18N4•	[A]	15	20	27.7	24.4	20.3	75.5	31.7	47.6
ATV950D22N4•	[A]	18.5	25	34.1	29.9	24.9	76	39.2	58.8
ATV950D30N4•	[B]	22	30	40.5	35.8	29.8	83	46.3	69.5
ATV950D37N4•	[B]	30	40	54.8	48.3	40.2	92	61.5	92.3
ATV950D45N4•	[B]	37	50	67.1	59	49.1	109.7	74.5	111.8
ATV950D55N4•	[C]	45	60	81.4	71.8	59.7	176	88	132
ATV950D75N4•	[C]	55	75	98.9	86.9	72.2	187	106	159
ATV950D90N4•	[C]	75	100	134.3	118.1	98.2	236	145	217.5

(1) The switching frequency is adjustable:
- From 2...12 kHz for drive frame sizes A and B, rated value: 4 kHz
- From 2...8 kHz for drive frame size C, rated value: 2.5 kHz

For operation at switching frequencies higher than the rated value. Derating must be applied to the drive (output) current, page 129. In this case, switching frequency can be reduced if an excessive temperature rise occurs.

(2) Peak current when power is switched on, for the maximum supply mains voltage.

(3) The drive is designed to run up to 60 s at 150% of nominal current.

(4) Size 1...5 drives: Including catalog numbers ATV930•••N4Z.

IP54 Products - Floor standing

3-Phase Power Part Supply 380(–15%)…440 Vac(+10%) 50/60 Hz

Power And Current Ratings

Catalog Number	Nominal Power (1) kW	Power Part Supply				Drive (output)	
		Max. Input Current		Apparent Power	Max. Inrush Current (2)	Nominal Current (1)	Max. Transient current (1) (3)
		At 380 Vac	At 440 Vac				
		A	A	kVA	A	A	A
ATV950C11N4F	90	174	151	115	187	173	260
ATV950C13N4F	110	207	179	136	187	211	317
ATV950C16N4F	132	244	210	160	187	250	375
ATV950C20N4F	160	302	262	200	345	302	453
ATV950C25N4F	200	369	319	243	345	370	555
ATV950C31N4F	250	453	391	298	345	477	716

(1) The switching frequency is adjustable from 2...8 kHz with a rated value of 2.5 kHz

For operation at switching frequencies higher than the rated value. Derating must be applied to the drive (output) current, page 129. In this case, switching frequency can be reduced if an excessive temperature rise occurs.

(2) Peak current when power is switched on, for the maximum supply mains voltage.

(3) The drive is designed to run up to 60 s at 150% of nominal current.

Floor Standing Drives - Fuse and Circuit-breaker Ratings

Catalog Number	Nominal Power	Upstream Cables		Internal Circuits
		gG Class Pre-fuse	Circuit-breaker I_{therm}	aR fuse
	kW	A	A	A
ATV9•0C11N4F	90	250	200	250
ATV9•0C13N4F	110	300	240	315
ATV9•0C16N4F	132	300	280	350
ATV9•0C20N4F	160	355	330	2 x 250
ATV9•0C25N4F	200	400	400	2 x 315
ATV9•0C31N4F	250	500	500	2 x 400

Braking Resistors

General

Braking resistors allow the drives to operate while braking to a standstill or during slowdown braking, by dissipating the braking energy. They enable maximum transient braking torque.

- For a detailed description and catalog numbers, refer to the catalog.
- For mounting instructions, wiring diagrams and other information, refer to the instruction sheet NHA87388 supplied with the resistor and available on www.se.com.

⚠ DANGER

HAZARD OF FIRE

- Some braking resistors are equipped with a thermal switch to detect overheating of the resistor. This thermal switch must be used upstream to the drive to switch off the mains contactor in case of overheating detection (1).
- When a braking resistor from third party supplier is used , conduct your own risk assessment according to EN ISO 12100 and all other standards that apply to your application to ensure that any failure mode does not result in unsafe conditions. For example, but not limited to, thermal monitoring must be used to switch off the mains contactor and/or the braking resistor itself in case of overheating detection.

Failure to follow these instructions will result in death or serious injury.

(1) Refer to the wiring diagrams provided into the braking resistors instruction sheet NHA87388. This instruction sheet is delivered with the braking resistor and/or can be downloaded on www.se.com.

Minimum Resistor Values

Minimum allowed value of the resistor to be connected

Catalog Number (1)	Minimum Value in Ω		Catalog Number	Minimum Value in Ω		Catalog Number	Minimum Value in Ω
ATV930U07N4	56		ATV930U15M3	33		ATV930D11Y6	12
ATV930U15N4	56		ATV930U22M3	22		ATV930D15Y6	12
ATV930U22N4	56		ATV930U30M3	22		ATV930D18Y6	12
ATV930U30N4	34		ATV930U40M3	16		ATV930D22Y6	12
ATV930U40N4	34		ATV930U55M3	11		ATV930D30Y6	12
ATV930U55N4	23		ATV930U75M3	8		ATV930D37Y6	8
ATV930U75N4	19		ATV930D11M3	5		ATV930D45Y6	8
ATV930D11N4	12		ATV930D15M3	5		ATV930D55Y6	8
ATV930D15N4	15		ATV930D18M3	5		ATV930D75Y6	5
ATV930D18N4	15		ATV930D22M3	5		ATV930D90Y6	5
ATV930D22N4	15		ATV930D30M3	2.5		ATV950U07N4	56
ATV930D30N4	10		ATV930D37M3	2.5		ATV950U15N4	56
ATV930D37N4	10		ATV930D45M3	2.5		ATV950U22N4	56
ATV930D45N4	10		ATV930D55M3C	1.4		ATV950U30N4	34
ATV930D55N4	2.5		ATV930D75M3C	1.4		ATV950U40N4	34
ATV930D75N4	2.5		ATV930D18S6	10		ATV950U55N4	23
ATV930D90N4	2.5		ATV930D22S6	10		ATV950U75N4	19

Catalog Number (1)	Minimum Value in Ω		Catalog Number	Minimum Value in Ω		Catalog Number	Minimum Value in Ω
ATV930C11N4	1.9		ATV930D30S6	5		ATV950D11N4	12
ATV930C13N4	1.9		ATV930D37S6	5		ATV950D15N4	15
ATV930C16N4	1.9		ATV930D45S6	5		ATV950D18N4	15
ATV930C11N4C	2.5		ATV930D55S6	2.5		ATV950D22N4	15
ATV930C13N4C	2.5		ATV930D75S6	2.5		ATV950D30N4	10
ATV930C16N4C	2.5		ATV930U22Y6	12		ATV950D37N4	10
ATV930C22N4	1.4		ATV930U30Y6	12		ATV950D45N4	10
ATV930C25N4C	1.05		ATV930U40Y6	12		ATV950D55N4	2.5
ATV930C31N4C	1.05		ATV930U55Y6	12		ATV950D75N4	2.5
ATV930U07M3	44		ATV930U75Y6	12		ATV950D90N4	2.5
(1) Resistor values apply to both catalog numbers ATV930•••N4 and ATV930•••N4Z.							

NOTE: It is not possible to connect braking resistors on floor standing drives (catalog numbers ATV930•••••F and ATV950•••••F).

Electrical Data - Upstream Protective Device

What's in This Chapter

Upstream Protective Device – Introduction 93
Prospective Short-Circuit Current 95
IEC Type Circuit-Breaker — with enclosure 99
IEC Fuses — with enclosure 103
IEC Fuses — wall mounted 107
UL Circuit-Breakers and Fuses 111

Upstream Protective Device – Introduction

Overview

⚠⚠DANGER

INSUFFICIENT PROTECTION AGAINST OVERCURRENTS CAN CAUSE FIRE OR EXPLOSION

- Use properly rated overcurrent protection devices.
- Use the fuses/circuit breakers specified.
- Do not connect the product to a supply mains whose prospective short circuit current rating (current that flows during a short circuit) exceeds the specified maximum permissible value.
- When rating the upstream mains fuses and the cross sections as well as the lengths of the mains cables, take into account the minimum required prospective short-circuit current (Isc). Refer to the Upstream Protection Device section.
- If the minimum required prospective short-circuit current (Isc) is not available, increase the power of the transformer or decrease the length of the cables.

Failure to follow these instructions will result in death or serious injury.

The values and products for IEC compliance are specified in the present manual.

The values and products for UL/CSA compliance are specified in the ATV900 Getting Started Annex (NHA61578) provided with the product.

General

- The Short Circuit Protective Device (SCPD) rated to the drive will help protect the upstream installation in case of a short-circuit internal to the drive and mitigate the damage to the drive and its surrounding area.
- The SCPD rated to the drive is mandatory to help ensuring the safety of the Power Drive System.

  It comes in addition to the upstream branch circuit protection which is in compliance with the local regulation for electrical installation.
- The SCPD shall mitigate the damage in case of detected error condition such as an internal short-circuit of the drive.
- The SCPD must take into account both following characteristics...
  - a maximum prospective short-circuit current
  - a minimum required prospective short-circuit current (Isc).

If the minimum required prospective short-circuit current (Isc) is not available, increase the power of the transformer or decrease the length of the cables

In other cases, contact your Schneider Electric Customer Care Center (CCC) www.se.com/CCC for specific selection of Short Circuit Protective Device (SCPD).

Note: The electronic power output short-circuit protection circuitry meets the requirements of IEC 60364-4-41:2005/AMD1 — Clause 411.

Wiring Diagram

This diagram shows an example of installation with both SCPD types, Circuit-breaker and Fuse link rated to the drive.

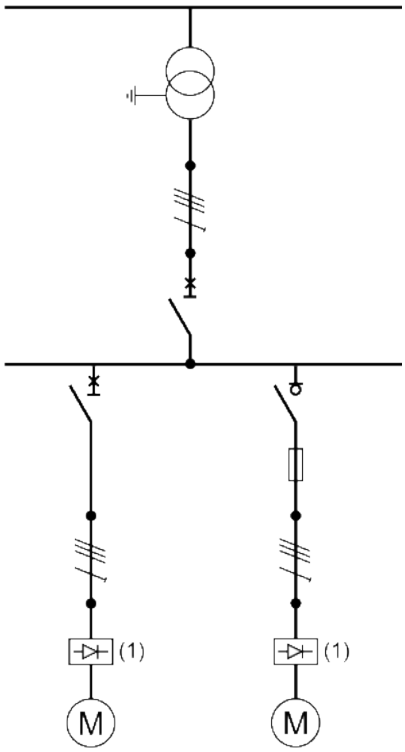

(1) Drive

Prospective Short-Circuit Current

Calculation

The prospective short-circuit current shall be computed at the drive connection points.

We recommend using the Schneider Electric tool Ecodial Advance Calculation available on www.se.com/en/product-range-presentation/61013-ecodial-advance-calculation/

The following equations allow to estimate the value of the symmetrical three-phase prospective short-circuit current (Isc) at the drive connection points.

$$Xt = \frac{U^2}{Sn} \cdot usc$$

$$Zcc = \sqrt{\left(\rho \cdot \frac{l}{S} + Rf\right)^2 + \left(Xt + Xc.l + Xf\right)^2}$$

$$Isc = \frac{U}{\sqrt{3}} \cdot \frac{1}{Zcc}$$

Isc	Symmetrical three-phase prospective short-circuit current (kA)
Xt	Transformer reactance
U	No-load phase to phase voltage of the transformer (V)
Sn	Apparent transformer power (kVA)
usc	Short-circuit voltage, according to the transformer data sheet (%)
Zcc	Total short-circuit impedance (mΩ)
ρ	Conductor resistivity e.g. Cu: 0.01851 mΩ.mm
l	Conductor length (mm)
S	Conductor cross section (mm^2)
Xc	Conductor lineic reactance (0.0001 mΩ/mm)
Rf, Xf	Resistance and reactance of the line filter (mΩ) , page 97

Example of Calculation with Copper Cable (without line filter)

Transformer 50 Hz	U 400 Vac Usc	Cable Cross Section	Isc depending on cable length in m(ft)							
			10 (33)	20 (66)	40 (131)	80 (262)	100 (328)	160 (525)	200 (656)	320 (1,050)
kVA	%	mm² (AWG)	kA	kA	kA	kA	kA	kA	kA	kA
100	4	2.5 (14)	2.3	1.4	0.8	0.4	0.3	0.2	0.2	0.1
		4 (12)	2.9	2.0	1.2	0.6	0.5	0.3	0.2	0.2
		6 (10)	3.2	2.6	1.6	0.9	0.7	0.5	0.4	0.2
		10 (8)	3.4	3.1	2.3	1.4	1.2	0.8	0.6	0.4
		25 (4)	3.5	3.4	3.1	2.5	2.2	1.6	1.4	0.9
		50 (0)	3.5	3.5	3.3	3.0	2.8	2.3	2.1	1.5
		70 (00)	3.5	3.5	3.4	3.1	2.9	2.6	2.3	1.8
		120 (250 MCM)	3.6	3.5	3.4	3.2	3.1	2.8	2.6	2.1
250	4	6 (10)	5.7	3.4	1.8	0.9	0.7	0.5	0.4	0.2
		10 (8)	7.1	5.0	2.9	1.5	1.2	0.8	0.6	0.4
		25 (4)	8.4	7.4	5.5	3.4	2.8	1.8	1.5	0.9
		50 (0)	8.6	8.1	7.0	5.2	4.5	3.2	2.7	1.8
		70 (00)	8.6	8.2	7.3	5.8	5.2	3.9	3.3	2.3
		120 (250 MCM)	8.7	8.3	7.6	6.5	6.0	4.8	4.2	3.0
400	4	6 (10)	6.6	3.6	1.8	0.9	0.7	0.5	0.4	0.2
		10 (8)	9.2	5.6	3.0	1.5	1.2	0.8	0.6	0.4
		25 (4)	12	9.9	6.5	3.6	2.9	1.9	1.5	1.0
		50 (0)	13	12	9.3	6.1	5.1	3.4	2.8	1.8
		70 (00)	13	12	10	7.2	6.2	4.4	3.6	2.4
		120 (250 MCM)	13	13	11	8.6	7.6	5.7	4.9	3.4
800	6	6 (10)	6.9	3.7	1.9	0.9	0.7	0.5	0.4	0.2
		10 (8)	10	5.8	3.0	1.5	1.2	0.8	0.6	0.4
		25 (4)	15	11	6.9	3.7	3.0	1.9	1.5	1.0
		50 (0)	17	15	11	6.5	5.4	3.5	2.9	1.8
		70 (00)	17	15	12	7.9	6.7	4.6	3.7	2.4
		120 (250 MCM)	17	16	13	9.8	8.6	6.2	5.2	3.5
1,000	6	6 (10)	7.1	3.7	1.9	0.9	0.7	0.5	0.4	0.2
		10 (8)	11	6.0	3.1	1.5	1.2	0.8	0.6	0.4
		25 (4)	18	12	7.1	3.7	3.0	1.9	1.5	1.0
		50 (0)	21	17	12	6.7	5.5	3.6	2.9	1.8
		70 (00)	21	18	13	8.4	7.0	4.7	3.8	2.4
		120 (250 MCM)	22	19	16	11	9.3	6.5	5.4	3.6

Additional Line Filter Option

If a line input filter option is required for the installation such as a line reactor or a passive harmonic filter, the minimum prospective short-circuit current capability of the source is reduced at the drive connection point and shall be estimated (see Calculation, page 95) with the impedance values given in the table below.

Then, the SCPD type shall be selected according to the drive. If no selection is available, Schneider Electric Customer Care Center (CCC) www.se.com/CCC should be contacted.

EMC filter series have no significant effect on the minimum prospective short-circuit current capability of the main source.

Through the line option, the Isc will be limited to a maximum value independent of the transformer and cable. **Therefore the below equations can be used to estimate the minimum prospective short-circuit current capability.**

$$10\,m\Omega \le Xf \le 400\,m\Omega \quad \Rightarrow \quad Isc_{maxi}\,(kA) = 4.7 - 0.7 \cdot Log\ (Xf)$$

$$400\,m\Omega \le Xf \le 2000\,m\Omega \quad \Rightarrow \quad Isc_{maxi}\,(kA) = 2.05 - 0.26 \cdot \mathrm{Log}(Xf)$$

Log: Natural logarithm

Line Choke Filters Impedance Values

Line Choke Filter	Xf in mΩ
VZ1L004M010, VW3A4551	700
VZ1L007UM50, VW3A4552	300
VZ1L018UM20, VW3A4553	100
VW3A4554	70
VW3A4555	30
VW3A4556	20

Harmonic Passive Filters Resistance and Reactance Values

Catalog Number			(Rf)	Xf	Catalog Number		Xf
Drive	Harmonic passive filter				Harmonic passive filter		
380...480 Vac	THDi < 10%		mΩ	mΩ	THDi < 5%		mΩ
ATV930U07N4, ATV950U07N4 ATV930U15N4, ATV950U15N4 ATV930U22N4, ATV950U22N4 ATV930U30N4, ATV950U30N4	VW3A46101	VW3A46139	–	700	VW3A46120	VW3A46158	1,800
ATV930U40N4, ATV950U40N4 ATV930U55N4, ATV950U55N4	VW3A46102	VW3A46140	–	420	VW3A46121	VW3A46159	1,000
ATV930U75N4, ATV950U75N4	VW3A46103	VW3A46141	–	300	VW3A46122	VW3A46160	540
ATV930D11N4, ATV950D11N4	VW3A46104	VW3A46142	–	230	VW3A46123	VW3A46161	530
ATV930D15N4, ATV950D15N4	VW3A46105	VW3A46143	–	160	VW3A46124	VW3A46162	390
ATV930D18N4, ATV950D18N4	VW3A46106	VW3A46144	–	140	VW3A46125	VW3A46163	320
ATV930D22N4, ATV950D22N4	VW3A46107	VW3A46145	–	110	VW3A46126	VW3A46164	270
ATV930D30N4, ATV950D30N4	VW3A46108	VW3A46146	–	80	VW3A46127	VW3A46165	180
ATV930D37N4, ATV950D37N4	VW3A46109	VW3A46147	–	60	VW3A46128	VW3A46166	170
ATV930D45N4, ATV950D45N4	VW3A46110	VW3A46148	–	50	VW3A46129	VW3A46167	130
ATV930D55N4, ATV950D55N4	VW3A46111	VW3A46149	–	40	VW3A46130	VW3A46168	100
ATV930D75N4, ATV950D75N4	VW3A46112	VW3A46150	–	30	VW3A46131	VW3A46169	70
ATV930D90N4, ATV950D90N4	VW3A46113	VW3A46151	30	30	VW3A46132	VW3A46170	50
ATV930C11N4	VW3A46114	VW3A46152	20	20	VW3A46133	VW3A46171	40
ATV930C13N4	VW3A46115	VW3A46153	20	20	VW3A46134	VW3A46172	30
ATV930C16N4	VW3A46116	VW3A46154	20	20	VW3A46135	VW3A46173	30
ATV930C22N4	VW3A46118	VW3A46155	10	10	VW3A46137	VW3A46174	20
ATV930C25N4	VW3A46119	VW3A46157	10	10	VW3A46138	VW3A46176	20
ATV930C31N4	VW3A46116x2	VW3A46153x2	10	10	VW3A46135x2	VW3A46172x2	15

IEC Type Circuit-Breaker — with enclosure

DANGER

HAZARD OF ELECTRIC SHOCK, EXPLOSION, OR FIRE

The opening of the branch-circuit protective device is able to be an indication that a fault current has been interrupted.

- Current-carrying parts and other components of the controller should be examined and replaced if damaged.
- If burnout of the current element of an overload relay occurs, the complete overload relay must be replaced.

Failure to follow these instructions will result in death or serious injury.

Function

The circuit-breaker offers enhanced features versus fuse-link since it cumulates 3 functionalities:

- insulation with lock,
- switch (full load interruption),
- downstream short-circuit protection without replacement.

Altivar Process Short Circuit Current Ratings: Selection Table

The amp rating of the short circuit protection devices in the table are maximum values **with Enclosure**, in **Normal Duty**.

Smaller amp sizes may be used; particularly for Heavy Duty ratings.

Note:

- Integral solid state short circuit protection in the drive does not provide branch circuit protection. Branch circuit protection must be provided in accordance with any local codes.
- The Altivar Process drive has a 100 kA interrupt rating on the output of the drive. In addition to providing a rating based on shorting the output of the drive, these short circuit current ratings have been obtained by shorting components internal to the Altivar Process. These ratings allow proper coordination of short circuit protection.

Note: Verify that the minimum required prospective short-circuit current (Isc) value from the table above is lower than the value estimated in the Calculation section, page 95.

240 Vac Three-phase (50/60 Hz)

Note: Suitable for use on a circuit capable of delivering not more than __***X***__ rms symmetrical kiloAmperes, **240 Vac** Volts maximum, when protected by __***Z1***__ with a maximum rating of __***Z2***__.

Circuit breakers can be chosen as SCPD according to the following table:

Drive Catalog Number	PowerPacT Catalog Number (a) (*Z1, Z2*)	SCCR (*X*)		Tesys GV / ComPact Catalog number (b) (*Z1, Z2*)	Irm	SCCR (*X*)		Minimum Enclosure Volume	
		Min (A)	Max (kA)		(A)	Min (A)	Max (kA)	(L)	(in³)
ATV930U07M3	B●L36015	1500	50	GV2L08	51	100	50	47	2880
ATV930U15M3	B●L36015	1500	50	GV2L10	78	200	50	47	2880
ATV930U22M3	B●L36025	1500	50	GV2L14	138	300	50	47	2880
ATV930U30M3	B●L36030	1500	50	GV2L16	170	300	50	47	2880
ATV930U40M3	B●L36030	1500	50	GV2L20	223	400	50	47	2880
ATV930U55M3	B●L36050	1700	50	GV2L22	327	600	50	47	2880
ATV930U75M3	B●L36060	3000	50	GV3L32	448	700	50	56	3390
ATV930D11M3	B●L36070	3000	50	GV3L40	560	900	50	56	3390
ATV930D15M3	B●L36090	3000	50	GV3L65	910	1800	50	115	7010
ATV930D18M3	B●L36110	3500	50	GV4L/LE80	480	1800	50	115	7010
ATV930D22M3	B●L36125	3500	50	GV4L/LE80	480	1800	50	115	7010
ATV930D30M3(C)	H●L36175	3500	50	GV4L/LE115	690	2500	50	197	12039
ATV930D37M3(C)	J●L36225	4000	50	NSX160●MA150	1350	3200	50	197	12039
ATV930D45M3(C)	J●L36250	4500	50	NSX160●MA150	1350	3200	50	197	12039
ATV930D55M3C	L●L36400	7500	50	NSX250●MA220	1980	4700	50	478	29160
ATV930D75M3C	L●L36600	10000	50	NSX400● Micrologic 1.3-M	1600	6300	50	478	29160

NOTE: (a): about PowerPacT Catalog Number: for 240 V range, for references to be completed, replace ● with the letter corresponding to the breaking performance of the circuit breaker:

D for 25 kA, **G** for 65 kA, **J** for 100 kA, **L** for 100 kA, **R** for 100 kA.

NOTE: (b): about Tesys GV / ComPact Catalog number: For references to be completed, replace ● with the letter corresponding to the breaking performance of the circuit breaker:(F, N, H, S, or L). You can use the EcoStruxure™ Motor Control Configurator tool to support your customization.

480 Vac Three-phase (50/60 Hz)

Note: Suitable for use on a circuit capable of delivering not more than __***X***__ rms symmetrical kiloAmperes, **480 Vac** Volts maximum, when protected by __***Z1***__ with a maximum rating of __***Z2***__.

Circuit breakers can be chosen as SCPD according to the following table:

Drive Catalog Number	PowerPacT Catalog Number (a) (*Z1, Z2*)	SCCR (*X*)		Tesys GV / ComPact Catalog number (b) (*Z1, Z2*)	Irm	SCCR (*X*)		Minimum Enclosure Volume	
		Min (A)	Max (kA)		(A)	Min (A)	Max (kA)	(L)	(in³)
ATV930U07N4(Z) ATV950U07N4(E)	B●L36015	1500	50	GV2L07	33,5	100	50	47	2880
ATV930U15N4(Z) ATV950U15N4(E)	B●L36015	1500	50	GV2L08	51	100	50	47	2880
ATV930U22N4(Z) ATV950U22N4(E)	B●L36015	1500	50	GV2L10	78	200	50	47	2880
ATV930U30N4(Z) ATV950U30N4(E)	B●L36015	1500	50	GV2L14	138	300	50	47	2880
ATV930U40N4(Z) ATV950U40N4(E)	B●L36015	1500	50	GV2L14	138	300	50	47	2880
ATV930U55N4(Z) ATV950U55N4(E)	B●L36025	1500	50	GV2L16	170	300	50	47	2880
ATV930U75N4(Z) ATV950U75N4(E)	B●L36030	1500	50	GV2L20	223	400	50	47	2880
ATV930D11N4(Z) ATV950D11N4(E)	B●L36050	1700	50	GV2L22	327	600	50	47	2880
ATV930D15N4(Z) ATV950D15N4(E)	B●L36060	3000	50	GV3L32	448	700	50	56	3390
ATV930D18N4(Z) ATV950D18N4(E)	B●L36070	3000	50	GV3L40	560	900	50	56	3390
ATV930D22N4(Z) ATV950D22N4(E)	B●L36080	3000	50	GV3L50	700	1100	50	56	3390
ATV930D30N4(Z) ATV950D30N4(E)	B●L36100	3500	50	GV3L65	910	1800	50	115	7010
ATV930D37N4(Z) ATV950D37N4(E)	B●L36125	3500	50	GV4L/LE80	480	1800	50	115	7010
ATV930D45N4(Z) ATV950D45N4(E)	H●L36150	3500	50	GV4L/LE115	690	2500	50	115	7010
ATV930D55N4(Z) ATV950D55N4(E)	J●L36175	3500	50	GV4L/LE115	690	2500	50	197	12039
ATV930D75N4(Z) ATV950D75N4(E)	J●L36200	4000	50	NSX160●MA150	1350	3200	50	197	12039
ATV930D90N4(Z) ATV950D90N4(E)	J●L36250	5000	50	NSX250●MA220	1980	4700	50	197	12039

Drive Catalog Number	PowerPacT Catalog Number (a) (*Z1, Z2*)	SCCR (*X*)		Tesys GV / ComPact Catalog number (b) (*Z1, Z2*)	Irm	SCCR (*X*)		Minimum Enclosure Volume	
		Min (A)	Max (kA)		(A)	Min (A)	Max (kA)	(L)	(in³)
ATV930C11N4(C)	L●L36400	7500	50	NSX250●MA220	1980	4700	50	478	29160
ATV930C13N4(C)	L●L36600	10000	50	NSX400● Micrologic 1.3-M	1600	6300	50	478	29160
ATV930C16N4(C)	L●L36600	10000	50	NSX400● Micrologic 1.3-M	1600	6300	50	478	29160

NOTE: (a): about PowerPacT Catalog Number: for 480 V range, for references to be completed, replace ● with the letter corresponding to the breaking performance of the circuit breaker:

D for 18 kA, **G** for 35 kA, **J** for 65 kA, **L** for 100 kA, **R** for 100 kA.

NOTE: (b): about Tesys GV / ComPact Catalog number: For references to be completed, replace ● with the letter corresponding to the breaking performance of the circuit breaker:(F, N, H, S, or L). You can use the EcoStruxure™ Motor Control Configurator tool to support your customization.

690 Vac Three-phase (50/60 Hz)

Note: Suitable for use on a circuit capable of delivering not more than __***X***__ rms symmetrical kiloAmperes, **690 Vac** Volts maximum, when protected by __***Z1***__ with a maximum rating of __***Z2***__.

Circuit breakers can be chosen as SCPD according to the following table:

Drive Catalog Number	PowerPacT Catalog Number (*Z1, Z2*)	SCCR (*X*)		Tesys GV / ComPact Catalog number (a) (*Z1, Z2*)	Irm	SCCR (*X*)		Minimum Enclosure Volume	
		Min (A)	Max (kA)		(A)	Min (A)	Max (kA)	(L)	(in³)
ATV930U22Y6	BRL36015	1500	20	GV2L10	78	200	70	142	8640
ATV930U30Y6	BRL36015	1500	20	GV2L10	78	200	70	142	8640
ATV930U40Y6	BRL36020	1500	20	GV2L14	138	300	70	142	8640
ATV930U55Y6	BRL36020	1500	20	GV2L14	138	300	70	142	8640
ATV930U75Y6	BRL36025	1500	20	GV2L16	170	300	70	142	8640
ATV930D11Y6	BRL36040	1700	20	GV2L20	223	400	70	142	8640
ATV930D15Y6	BRL36050	1700	20	GV2L22	327	600	70	142	8640
ATV930D18Y6	BRL36060	3000	20	GV3L25	350	600	70	142	8640
ATV930D22Y6	BRL36080	3000	20	GV3L32	448	700	70	142	8640
ATV930D30Y6	BRL36100	3500	20	GV3L40	560	900	70	142	8640
ATV930D37Y6	BRL36125	3500	20	GV3L50	700	1100	70	283	17280
ATV930D45Y6	HRL36150	3500	20	GV3L65	910	1800	70	283	17280
ATV930D55Y6	HRL36150	3500	20	NSX100●MA100	600	2900	70	283	17280
ATV930D75Y6	JRL36200	4000	20	NSX100●MA100	600	2900	70	283	17280
ATV930D90Y6	JRL36250	5000	20	NSX160●MA150	1350	3200	70	283	17280

NOTE: (a): about Tesys GV / ComPact Catalog number: For references to be completed, replace ● with the letter corresponding to the breaking performance of the circuit breaker:(F, N, H, S, or L). You can use the EcoStruxure™ Motor Control Configurator tool to support your customization.

IEC Fuses — with enclosure

Introduction

⚠⚠DANGER

HAZARD OF ELECTRIC SHOCK, EXPLOSION, OR FIRE

The opening of the branch-circuit protective device is able to be an indication that a fault current has been interrupted.

- Current-carrying parts and other components of the controller should be examined and replaced if damaged.
- If burnout of the current element of an overload relay occurs, the complete overload relay must be replaced.

Failure to follow these instructions will result in death or serious injury.

NOTE: For ATV930C22N4(C), ATV930C25N4C, ATV930C31N4C references, only gR, gS or aR fuses are mandatory in case of using DC bus and/or braking ports, to comply with IEC 61800-5-1 Ed 2.1.

Altivar Process Short Circuit Current Ratings: Selection Table

The amp rating of the short circuit protection devices in the table are maximum values **with Enclosure**, in **Normal Duty**.

Smaller amp sizes may be used; particularly for Heavy Duty ratings.

Note:

- Integral solid state short circuit protection in the drive does not provide branch circuit protection. Branch circuit protection must be provided in accordance with any local codes.
- The Altivar Process drive has a 100 kA interrupt rating on the output of the drive. In addition to providing a rating based on shorting the output of the drive, these short circuit current ratings have been obtained by shorting components internal to the Altivar Process. These ratings allow proper coordination of short circuit protection.

Note: Verify that the minimum required prospective short-circuit current (Isc) value from the table above is lower than the value estimated in the Calculation section, page 95.

240 Vac Three-phase (50/60 Hz)

Note: Suitable for use on a circuit capable of delivering not more than __***X***__ rms symmetrical kiloAmperes, **240 Vac** Volts maximum, when protected by __***Z1***__ with a maximum rating of __***Z2***__.

Current limiting fuses can be chosen as SCPD according to the following table:

Drive Catalog Number	gG (*Z1, Z2*)	SCCR (*X*)		gR-gS-aR (*Z1, Z2*)	Minimum size	SCCR (*X*)		Minimum Enclosure Volume	
	(A)	Min (A)	Max (kA)	(A)		Min (A)	Max (kA)	(L)	(in³)
ATV930U07M3	8	200	50	8	10x38	100	50	47	2880
ATV930U15M3	10	300	50	10	10x38	100	50	47	2880
ATV930U22M3	16	400	50	16	10x38	200	50	47	2880
ATV930U30M3	20	1000	50	20	10x38	200	50	47	2880
ATV930U40M3	25	1000	50	25	10x38	300	50	47	2880
ATV930U55M3	40	2000	50	40	14x51	500	50	47	2880
ATV930U75M3	50	2500	50	50	14x51	800	50	56	3390
ATV930D11M3	63	3000	50	63	22x58	1000	50	56	3390
ATV930D15M3	100	5500	50	100	22x58	1500	50	115	7010
ATV930D18M3	125	6500	50	125	22x58	2000	50	115	7010
ATV930D22M3	125	6500	50	125	22x58	2000	50	115	7010
ATV930D30M3(C)	160	9000	50	160	00	2500	50	197	12039
ATV930D37M3(C)	200	12000	50	200	1	4000	50	197	12039
ATV930D45M3(C)	250	15000	50	250	1	5000	50	197	12039
ATV930D55M3C	–	–	–	315	2	6000	25	478	29160
ATV930D75M3C	–	–	–	350	2	7000	25	478	29160

480 Vac Three-phase (50/60 Hz)

Note: Suitable for use on a circuit capable of delivering not more than __***X***__ rms symmetrical kiloAmperes, **480 Vac** Volts maximum, when protected by __***Z1***__ with a maximum rating of __***Z2***__.

Current limiting fuses can be chosen as SCPD according to the following table:

Drive Catalog Number	gG (*Z1, Z2*)	SCCR (*X*)		gR-gS-aR (*Z1, Z2*)	Minimum size	SCCR (*X*)		Minimum Enclosure Volume		Line Reactor Min Value	
	(A)	Min (A)	Max (kA)	(A)		Min (A)	Max (kA)	(L)	(in³)	(m-H)	(A)
ATV930U07N4(Z) ATV950U07N4(E)	4	200	50	4	10x38	100	50	47	2880	–	–
ATV930U15N4(Z) ATV950U15N4(E)	8	200	50	8	10x38	100	50	47	2880	–	–
ATV930U22N4(Z) ATV950U22N4(E)	10	300	50	10	10x38	100	50	47	2880	–	–
ATV930U30N4(Z) ATV950U30N4(E)	12	300	50	12	10x38	200	50	47	2880	–	–
ATV930U40N4(Z) ATV950U40N4(E)	16	400	50	16	10x38	200	50	47	2880	–	–
ATV930U55N4(Z) ATV950U55N4(E)	20	1000	50	20	10x38	200	50	47	2880	–	–
ATV930U75N4(Z) ATV950U75N4(E)	25	1000	50	25	10x38	300	50	47	2880	–	–
ATV930D11N4(Z) ATV950D11N4(E)	40	2000	50	40	14x51	500	50	47	2880	–	–
ATV930D15N4(Z) ATV950D15N4(E)	50	2000	50	50	000	800	50	56	3390	–	–
ATV930D18N4(Z) ATV950D18N4(E)	63	3000	50	63	000	1000	50	56	3390	–	–
ATV930D22N4(Z) ATV950D22N4(E)	80	4000	50	80	000	1500	50	56	3390	–	–
ATV930D30N4(Z) ATV950D30N4(E)	100	5500	50	100	000	1500	50	115	7010	–	–
ATV930D37N4(Z) ATV950D37N4(E)	125	6500	50	125	00	2000	50	115	7010	–	–
ATV930D45N4(Z) ATV950D45N4(E)	160	9000	50	160	1	2500	50	115	7010	–	–
ATV930D55N4(Z) ATV950D55N4(E)	160	9000	50	160	1	2500	50	197	12039	–	–
ATV930D75N4(Z) ATV950D75N4(E)	250	15000	50	250	1	5000	50	197	12039	–	–
ATV930D90N4(Z) ATV950D90N4(E)	250	15000	50	250	1	5000	50	197	12039	–	–

Drive Catalog Number	gG (*Z1, Z2*)	SCCR (*X*)		gR-gS-aR (*Z1, Z2*)	Minimum size	SCCR (*X*)		Minimum Enclosure Volume		Line Reactor Min Value	
	(A)	Min (A)	Max (kA)	(A)		Min (A)	Max (kA)	(L)	(in³)	(m-H)	(A)
ATV930C11N4(C)	–	–	–	315	2	6000	25	478	29160	–	–
ATV930C13N4(C)	–	–	–	350	2	7000	25	478	29160	–	–
ATV930C16N4(C)	–	–	–	400	2	9000	25	478	29160	–	–
ATV930C22N4(C)	–	–	–	aR 630	2	10000	18	878	53550	0.05	400
ATV930C25N4C	–	–	–	aR 700	2	10000	18	878	53550	0.05	440
ATV930C31N4C	–	–	–	aR 800	3	10000	30	878	53550	0.04	560

690 Vac Three-phase (50/60 Hz)

Note: Suitable for use on a circuit capable of delivering not more than __***X***__ rms symmetrical kiloAmperes, **690 Vac** Volts maximum, when protected by __***Z1***__ with a maximum rating of __***Z2***__.

Current limiting fuses can be chosen as SCPD according to the following table:

Drive Catalog Number	gG (*Z1, Z2*)	SCCR (*X*)		gR-gS-aR (*Z1, Z2*)	Minimum size	SCCR (*X*)		Minimum Enclosure Volume	
	(A)	Min (A)	Max (kA)	(A)		Min (A)	Max (kA)	(L)	(in³)
ATV930U22Y6	8	200	70	8	10x38	100	70	142	8640
ATV930U30Y6	8	200	70	8	10x38	100	70	142	8640
ATV930U40Y6	10	300	70	10	10x38	100	70	142	8640
ATV930U55Y6	16	400	70	16	10x38	200	70	142	8640
ATV930U75Y6	20	1000	70	20	10x38	200	70	142	8640
ATV930D11Y6	25	1000	70	25	10x38	300	70	142	8640
ATV930D15Y6	32	2000	70	32	10x38	500	70	142	8640
ATV930D18Y6	40	2000	70	40	14x51	500	70	142	8640
ATV930D22Y6	50	2000	70	50	14x51	800	70	142	8640
ATV930D30Y6	63	3000	70	63	22x58	1000	70	142	8640
ATV930D37Y6	80	4000	70	80	000	1500	70	283	17280
ATV930D45Y6	100	5500	70	100	000	1500	70	283	17280
ATV930D55Y6	100	5500	70	100	000	1500	70	283	17280
ATV930D75Y6	125	6500	70	125	00	2000	70	283	17280
ATV930D90Y6	160	9000	70	160	00	2500	70	283	17280

IEC Fuses — wall mounted

Introduction

⚠⚠DANGER

HAZARD OF ELECTRIC SHOCK, EXPLOSION, OR FIRE

The opening of the branch-circuit protective device is able to be an indication that a fault current has been interrupted.

- Current-carrying parts and other components of the controller should be examined and replaced if damaged.
- If burnout of the current element of an overload relay occurs, the complete overload relay must be replaced.

Failure to follow these instructions will result in death or serious injury.

NOTE: For ATV930C22N4(C), ATV930C25N4C, ATV930C31N4C references, only gR, gS or aR fuses are mandatory in case of using DC bus and/or braking ports, to comply with IEC 61800-5-1 Ed 2.1.

Altivar Process Short Circuit Current Ratings: Selection Table

The amp rating of the short circuit protection devices in the table are maximum values **with conduit box (wall mounted)**, in **Normal Duty**.

Smaller amp sizes may be used; particularly for Heavy Duty ratings.

Note:

- Integral solid state short circuit protection in the drive does not provide branch circuit protection. Branch circuit protection must be provided in accordance with any local codes.
- The Altivar Process drive has a 100 kA interrupt rating on the output of the drive. In addition to providing a rating based on shorting the output of the drive, these short circuit current ratings have been obtained by shorting components internal to the Altivar Process. These ratings allow proper coordination of short circuit protection.

Note: Verify that the minimum required prospective short-circuit current (Isc) value from the table above is lower than the value estimated in the Calculation section, page 95.

240 Vac Three-phase (50/60 Hz)

Note: Suitable for use on a circuit capable of delivering not more than __***X***__ rms symmetrical kiloAmperes, **240 Vac** Volts maximum, when protected by __***Z1***__ with a maximum rating of __***Z2***__.

Current limiting fuses can be chosen as SCPD according to the following table:

Drive Catalog Number	Wall mounting kit	gG (*Z1, Z2*)	SCCR (*X*)		gR-gS-aR (*Z1, Z2*)	Minimum size	SCCR (*X*)	
		(A)	Min (A)	Max (kA)	(A)		Min (A)	Max (kA)
ATV930U07M3	-	8	200	50	8	10x38	100	50
ATV930U15M3	-	10	300	50	10	10x38	100	50
ATV930U22M3	-	16	400	50	16	10x38	200	50
ATV930U30M3	-	20	1000	50	20	10x38	200	50
ATV930U40M3	-	25	1000	50	25	10x38	300	50
ATV930U55M3	-	40	2000	50	40	14x51	500	50
ATV930U75M3	-	50	2500	50	50	14x51	800	50
ATV930D11M3	-	63	3000	50	63	22x58	1000	50
ATV930D15M3	-	100	5500	50	100	22x58	1500	50
ATV930D18M3	-	125	6500	50	125	22x58	2000	50
ATV930D22M3	-	125	6500	50	125	22x58	2000	50
ATV930D30M3 ATV930D30M3C	-	160	9000	50	160	00	2500	50
ATV930D37M3 ATV930D37M3C	-	200	12000	50	200	1	4000	50
ATV930D45M3 ATV930D45M3C	-	250	15000	50	250	1	5000	50
ATV930D55M3C	VW3A9704	–	–	–	315	2	6000	25
ATV930D75M3C	VW3A9704	–	–	–	350	2	7000	25

480 Vac Three-phase (50/60 Hz)

Note: Suitable for use on a circuit capable of delivering not more than __***X***__ rms symmetrical kiloAmperes, **480 Vac** Volts maximum, when protected by __***Z1***__ with a maximum rating of __***Z2***__.

Current limiting fuses can be chosen as SCPD according to the following table:

Drive Catalog Number	Wall mounting kit	gG (*Z1, Z2*)	SCCR (*X*)		gR-gS-aR (*Z1, Z2*)	Minimum size	SCCR (*X*)	
		(A)	Min (A)	Max (kA)	(A)		Min (A)	Max (kA)
ATV930U07N4 ATV950U07N4(E)	-	4	200	50	4	10x38	100	50
ATV930U15N4 ATV950U15N4(E)	-	8	200	50	8	10x38	100	50
ATV930U22N4 ATV950U22N4(E)	-	10	300	50	10	10x38	100	50
ATV930U30N4 ATV950U30N4(E)	-	12	300	50	12	10x38	200	50
ATV930U40N4 ATV950U40N4(E)	-	16	400	50	16	10x38	200	50
ATV930U55N4 ATV950U55N4(E)	-	20	1000	50	20	10x38	200	50
ATV930U75N4 ATV950U75N4(E)	-	25	1000	50	25	10x38	300	50
ATV930D11N4 ATV950D11N4(E)	-	40	2000	50	40	14x51	500	50
ATV930D15N4 ATV950D15N4(E)	-	50	2000	50	50	000	800	50
ATV930D18N4 ATV950D18N4(E)	-	63	3000	50	63	000	1000	50
ATV930D22N4 ATV950D22N4(E)	-	80	4000	50	80	000	1500	50
ATV930D30N4 ATV950D30N4(E)	-	100	5500	50	100	000	1500	50
ATV930D37N4 ATV950D37N4(E)	-	125	6500	50	125	00	2000	50
ATV930D45N4 ATV950D45N4(E)	-	160	9000	50	160	1	2500	50
ATV930D55N4 ATV950D55N4(E)	-	160	9000	50	160	1	2500	50
ATV930D75N4 ATV950D75N4(E)	-	250	15000	50	250	1	5000	50
ATV930D90N4 ATV950D90N4(E)	-	250	15000	50	250	1	5000	50

Drive Catalog Number	Wall mounting kit	gG (*Z1, Z2*)	SCCR (*X*)		gR-gS-aR (*Z1, Z2*)	Minimum size	SCCR (*X*)	
		(A)	Min (A)	Max (kA)	(A)		Min (A)	Max (kA)
ATV930C11N4 ATV930C11N4C	- VW3A9704	–	–	–	315	2	6000	25
ATV930C13N4 ATV930C13N4C	- VW3A9704	–	–	–	350	2	7000	25
ATV930C16N4 ATV930C16N4C	- VW3A9704	–	–	–	400	2	9000	25
ATV930C22N4(C)	VW3A9112	–	–	–	aR 630	2	10000	18
ATV930C25N4C	VW3A9113 or VW3A9114	–	–	–	aR 700	2	10000	18
ATV930C31N4C	VW3A9113 or VW3A9114	–	–	–	aR 800	3	10000	30

690 Vac Three-phase (50/60 Hz)

Note: Suitable for use on a circuit capable of delivering not more than __***X***__ rms symmetrical kiloAmperes, **690 Vac** Volts maximum, when protected by __***Z1***__ with a maximum rating of __***Z2***__.

Current limiting fuses can be chosen as SCPD according to the following table:

Drive Catalog Number	Wall mounting kit	gG (*Z1, Z2*)	SCCR (*X*)		gR-gS-aR (*Z1, Z2*)	Minimum size	SCCR (*X*)	
		(A)	Min (A)	Max (kA)	(A)		Min (A)	Max (kA)
ATV930U22Y6	VW3A9705	8	200	70	8	10x38	100	70
ATV930U30Y6	VW3A9705	8	200	70	8	10x38	100	70
ATV930U40Y6	VW3A9705	10	300	70	10	10x38	100	70
ATV930U55Y6	VW3A9705	16	400	70	16	10x38	200	70
ATV930U75Y6	VW3A9705	20	1000	70	20	10x38	200	70
ATV930D11Y6	VW3A9705	25	1000	70	25	10x38	300	70
ATV930D15Y6	VW3A9705	32	2000	70	32	10x38	500	70
ATV930D18Y6	VW3A9705	40	2000	70	40	14x51	500	70
ATV930D22Y6	VW3A9705	50	2000	70	50	14x51	800	70
ATV930D30Y6	VW3A9705	63	3000	70	63	22x58	1000	70
ATV930D37Y6	VW3A9706	80	4000	70	80	000	1500	70
ATV930D45Y6	VW3A9706	100	5500	70	100	000	1500	70
ATV930D55Y6	VW3A9706	100	5500	70	100	000	1500	70
ATV930D75Y6	VW3A9706	125	6500	70	125	00	2000	70
ATV930D90Y6	VW3A9706	160	9000	70	160	00	2500	70

UL Circuit-Breakers and Fuses

Reference Document

UL Fuse and circuit-breaker information is provided in the Annex for ATV900 Getting Started (NHA61583).

Complementary Information

The following table shows the minimum required prospective short-circuit current (Isc) depending on the drive and **associated circuit-breaker**.

Minimum Required Prospective Short-circuit Current with Associated Circuit-Breaker

Catalog Number			Circuit Breakers			
			PowerPact	Min. Isc	GV•P	Min. Isc
200...240 Vac	380...480 Vac	600 Vac		(A)		(A)
–	ATV930U07N4(Z), ATV950U07N4(E)	–	H•L36015	1,500	GV2P07	100
ATV930U07M3	ATV930U15N4(Z), ATV950U15N4(E) ATV930U22N4(Z), ATV950U22N4(E)	–	H•L36015	1,500	GV2P08	100
ATV930U15M3	ATV930U30N4(Z), ATV950U30N4(E) ATV930U40N4(Z), ATV950U40N4(E)	–	H•L36015	1,500	GV2P10	200
ATV930U22M3	ATV930U55N4(Z), ATV950U55N4(E)	–	H•L36025	1,500	GV2P14	300
ATV930U30M3	–	–	H•L36030	1,500	GV2P14	300
ATV930U40M3	–	–	H•L36030	1,500	GV2P20	400
ATV930U55M3	–	–	H•L36050	1,700	GV2P21	600
–	–	ATV930U22S6X ATV930U40S6X ATV930U22Y6 ATV930U30Y6	H•L36015	1,500	GV3P13	300
–	–	ATV930U55S6X ATV930U40Y6 ATV930U55Y6	H•L36020	3,500	GV3P13	300
–	–	ATV930U75S6X ATV930U75Y6	H•L36025	3,500	GV3P13	300
–	ATV930U75N4(Z), ATV950U75N4(E)		H•L36030	3,500	GV3P13	300
–	–	ATV930D11Y6	H•L36040	1,700	GV3P13	300
–	–	ATV930D11S6X	H•L36040	1,700	GV3P18	400
–	ATV930D11N4(Z), ATV950D11N4(E)	ATV930D15Y6	H•L36050	1,700	GV3P18	400
ATV930U75M3	–	–	H•L36060	3,000	GV2P32	700
–	–	ATV930D15S6X	H•L36050	1,700	GV3P25	700
–	ATV930D15N4(Z), ATV950D15N4(E)	ATV930D18Y6	H•L36060	3,000	GV3P25	700
–	–	ATV930D18S6 ATV930D22Y6	H•L36080	3,000	GV3P25	700

Minimum Required Prospective Short-circuit Current with Associated Circuit-Breaker (Continued)

Catalog Number			Circuit Breakers			
			PowerPact	Min. Isc	GV•P	Min. Isc
200...240 Vac	380...480 Vac	600 Vac		(A)		(A)
–	ATV930D18N4(Z), ATV950D18N4(E)		H•L36070	3,000	GV3P32	700
–	–	ATV930D22S6 ATV930D30Y6	H•L36100	3,500	GV3P32	700
ATV930D11M3	–	–	H•L36070	3,000	GV3P40	900
–	ATV930D22N4(Z), ATV950D22N4(E)	–	H•L36080	3,000	GV3P40	900
ATV930D15M3	–	–	H•L36090	3,000	GV3P50	1,100
–	ATV930D30N4(Z), ATV950D30N4(E)	–	H•L36100	3,500	GV3P50	1,100
–	–	ATV930D30S6 ATV930D37Y6	H•L36125	3,500	GV3P50	1,100
–	–	ATV930D37S6 ATV930D45Y6	H•L36150	3,500	GV3P50	1,100
ATV930D18M3	–	–	H•L36110	3,500	GV3P65	1,800
–	ATV930D37N4(Z), ATV950D37N4(E)	–	H•L36125	3,500	GV3P65	1,800
–	–	ATV930D45S6 ATV930D55Y6	H•L36150	3,500	GV3P65	1,800
ATV930D22M3	–	–	H•L36125	3,500	GV4PB80S	6,000
–	ATV930D45N4(Z), ATV950D45N4(E)	–	H•L36150	3,500	GV4PB80S	6,000
–	–	ATV930D55S6 ATV930D75Y6	J•L36200	4,000	GV4PB80S	6,000
ATV930D30M3•	ATV930D55N4•, ATV950D55N4(E)	–	J•L36175	3,500	GV4PB115S	6,000
ATV930D37M3	–	–	J•L36200	4,000	–	–
ATV930D45M3	–	–	J•L36225	4,500	–	–
–	ATV930D75N4•, ATV950D75N4(E)	–	J•L36200	4,000	GV4PB115S	6,000
–	–	ATV930D75S6 ATV930D90Y6	J•L36250	5,000	GV4PB115S	6,000
–	ATV930D90N4•, ATV950D90N4(E)	–	J•L36250	5,000	GV5P150H	8,500
ATV930D55M3	–	–	L•L36400	7,500	–	–
	ATV930C11N4(C)	–	L•L36400	7,500	GV5P220H	9,500
ATV930D75M3	–	–	L•L36600	10,000	–	–
–	ATV930C13N4(C)	–	L•L36600	10,000	GV5P220H	9,500
–	ATV930C16N4(C)	–	L•L36600	10,000	GV6P320H	18,000

(1) Standard fixed trip unit; see PowerPact catalog (0611CT1001 R02/16), Table18, x 2 for trip within 1 cycle

(2) Electronic trip unit magnetic only, ref M37x (Micrologic 1.3M); see PowerPact catalog (0611CT1001 R02/16) Table 53, x 1.5)

Catalog Number			PowerPact Circuit-breakers (1)	Minimum Isc
200...240 Vac	**380...500 Vac**	**525...600 Vac**		**(A)**
ATV930U07M3 ATV930U15M3	ATV930U07N4, ATV950U07N4 ATV930U15N4, ATV950U15N4 ATV930U22N4, ATV950U22N4 ATV930U30N4, ATV950U30N4 ATV930U40N4, ATV950U40N4	ATV930U22S6X ATV930U40S6X ATV930U22Y6 ATV930U30Y6	HLL36015	1,500
–	–	ATV930U55S6X ATV930U40Y6 ATV930U55Y6	HLL36020	1,500
ATV930U22M3	ATV930U55N4, ATV950U55N4	ATV930U75S6X ATV930U75Y6	HLL36025	1,500
ATV930U30M3 ATV930U40M3	ATV930U75N4, ATV950U75N4	–	HLL36030	1,500
–	–	ATV930D11S6X ATV930D11Y6	HLL36040	1,700
ATV930U55M3	ATV930D11N4, ATV950D11N4	ATV930D15S6X ATV930D15Y6	HLL36050	1,700
ATV930U75M3	ATV930D15N4, ATV950D15N4	ATV930D18Y6	HLL36060	3,000
ATV930D11M3	ATV930D18N4, ATV950D18N4	–	HLL36070	3,000
	ATV930D22N4, ATV950D22N4	ATV930D18S6 ATV930D22Y6	HLL36080	3,000
ATV930D15M3	–	–	HLL36090	3,000
	ATV930D30N4, ATV950D30N4	ATV930D22S6 ATV930D30Y6	HLL36100	3,500
ATV930D18M3	–	–	HLL36110	3,500
ATV930D22M3	ATV930D37N4, ATV950D37N4	ATV930D30S6 ATV930D37Y6	HLL36125	3,500
	ATV930D45N4, ATV950D45N4	ATV930D37S6 ATV930D45S6 ATV930D45Y6 ATV930D55Y6	HLL36150	3,500
ATV930D30M3	ATV930D55N4, ATV950D55N4		JLL36175	3,500
	ATV930D75N4, ATV950D75N4	ATV930D45S6 ATV930D75Y6	JLL36200	4,000
ATV930D37M3	–	–	JLL36225	4,500
ATV930D45M3	ATV930D90N4, ATV950D90N4	ATV930D75S6 ATV930D90Y6	JLL36250	5,000
ATV930D55M3	ATV9•0C11N4	–	LLL36400 (2)	7,500
ATV930D75M3	ATV9•0C13N4 ATV9•0C16N4	–	LLL36600 (2)	10,000
–	ATV9•0C22N4	–	not applicable	
–	ATV9•0C25N4	–	not applicable	
–	ATV9•0C31N4	–	not applicable	

(1) Standard fixed trip unit; see PowerPact catalog (0611CT1001 R02/16), Table18, x 2 for trip within 1 cycle

(2) Electronic trip unit magnetic only, ref M37x (Micrologic 1.3M); see PowerPact catalog (0611CT1001 R02/16) Table 53, x 1.5)

The following table shows the minimum required prospective short-circuit current (Isc) depending on the drive and **associated class J fuse**, according to UL248-8.

Minimum Required Prospective Short-circuit Current with Associated Class J Fuse

Catalog Number			Class J Fuse to UL248-8	Minimum Isc
200...240 Vac	**380...480 Vac**	**600 Vac**	**(A)**	**(A)**
–	ATV930U07N4(Z), ATV950U07N4(E)	–	3	100
ATV930U07M3	ATV930U15N4(Z), ATV950U15N4(E)	ATV930U22Y6 ATV930U22S6X	6	300
ATV930U15M3	ATV930U22N4(Z), ATV950U22N4(E) ATV930U30N4(Z), ATV950U30N4(E)	ATV930U30Y6 ATV930U40S6X	10	500
ATV930U22M3	ATV930U40N4(Z), ATV950U40N4(E) ATV930U55N4(Z), ATV950U55N4(E)	ATV930U40Y6 ATV930U55Y6 ATV930U75Y6 ATV930U55S6X ATV930U75S6X	15	500
ATV930U30M3	ATV930U75N4(Z), ATV950U75N4(E)	ATV930D11Y6	20	500
ATV930U40M3	–	ATV930D11S6X ATV930D15Y6	25	1,000
–	ATV930D11N4(Z), ATV950D11N4(E)		30	1,000
–	–	ATV930D15S6X ATV930D18Y6	30	1,000
ATV930U55M3	–	ATV930D18S6 ATV930D22Y6	35	1,500
–	ATV930D15N4(Z), ATV950D15N4(E)	ATV930D22S6 ATV930D30Y6	40	1,500
ATV930U75M3	–	–	45	2,000
–	ATV930D18N4(Z), ATV950D18N4(E)	–	50	2,000
ATV930D11M3	ATV930D22N4(Z), ATV950D22N4(E)	ATV930D30S6 ATV930D37Y6	60	2,000
–	–	ATV930D37S6 ATV930D45Y6	70	2,000
ATV930D15M3	ATV930D30N4(Z), ATV950D30N4(E)	ATV930D45S6 ATV930D55Y6	80	2,000
–	ATV930D37N4(Z), ATV950D37N4(E)		90	2,500
ATV930D18M3 ATV930D22M3	ATV930D45N4(Z), ATV950D45N4(E)	–	100	2,500
–	–	ATV930D55S6 ATV930D75Y6	110	2,500
–	ATV930D55N4•, ATV950D55N4(E)	ATV930D75S6 ATV930D90Y6	150	3,500
ATV930D30M3(C)	–	–	175	5,000
ATV930D37M3(C) ATV930D45M3(C)	ATV930D75N4•, ATV950D75N4(E) ATV930D90N4•, ATV950D90N4(E)	–	200	5,000
–	ATV930C11N4(C)	–	250	6,500
ATV930D55M3C	ATV930C13N4(C)	–	315	8,000
ATV930D75M3C	ATV930C16N4(C)	–	350	9,000

Minimum Required Prospective Short-circuit Current with Associated Class J Fuse (Continued)

Catalog Number			Class J Fuse to UL248-8	Minimum Isc
200...240 Vac	**380...480 Vac**	**600 Vac**	**(A)**	**(A)**
–	ATV930C22N4(C)(MN)	–	500	12,000
–	ATV930C25N4C(MN) ATV930C31N4C(MN)	–	600	15,000

Drive Mounting

What's in This Part

Mounting Conditions 117
Derating Curves 129
Mounting Procedures 141

Mounting Conditions

Before You Begin

⚠⚠DANGER

HAZARD OF FIRE OR ELECTRIC SHOCK

- The open type product does not provide comprehensive mitigation for fire hazards and protection against direct contact to hazardous live parts.
- Install the product inside a supplementary enclosure which provides appropriate protection against spread of fire and electric shock.

Failure to follow these instructions will result in death or serious injury.

⚠DANGER

RISK OF FIRE

The device is suitable for mounting on concrete or other non-combustible surfaces only.

Failure to follow these instructions will result in death or serious injury.

Conductive foreign objects may cause parasitic voltage.

⚠⚠DANGER

ELECTRIC SHOCK AND/OR UNANTICIPATED EQUIPMENT OPERATION

- Keep foreign objects such as chips, screws or wire clippings from getting into the product.
- Verify correct seat of seals and cable entries in order to avoid deposits and humidity.

Failure to follow these instructions will result in death or serious injury.

The temperature of the products described in this manual may exceed 80 °C (176 °F) during operation.

⚠WARNING

HOT SURFACES

- Ensure that any contact with hot surfaces is avoided.
- Do not allow flammable or heat-sensitive parts in the immediate vicinity of hot surfaces.
- Verify that the product has sufficiently cooled down before handling it.
- Verify that the heat dissipation is sufficient by performing a test run under maximum load conditions.

Failure to follow these instructions can result in death, serious injury, or equipment damage.

Power Drive Systems (PDS) can generate strong local electrical and magnetic fields. This can cause interference in electromagnetically sensitive devices.

⚠ WARNING

ELECTROMAGNETIC FIELDS

- Keep persons with electronic medical implants, such as pacemakers, away from the equipment.
- Do not place electromagnetically sensitive devices in the vicinity of the equipment.

Failure to follow these instructions can result in death, serious injury, or equipment damage.

Attaching A Label With Safety Instructions

A label kit is provided with the drive.

Step	Action
1	Observe the safety regulations in the target country
2	Select the label suitable for the target country
3	Attach the label to the front of the device so that it is clearly visible. Below is the English version. The label can vary depending on the frame size of the product. **NOTE: Products used in Canada** according to CSA C22.2 no.274 must comply with the requirement defined by the Canadian Advisory council of Electrical Safety (CACES). It defines that dual language (French and English) safety labeling is required on all products for use in Canada. To fulfill this requirement, add the French language safety label on the front panel of the product.

Mounting Types

This table shows the possible mounting types and the resulting IP degree of protection.

Possible Mounting Types

Mounting		Figure
Type	**Description**	
–	Enclosed with flange-mounting kit	This mounting is used to reduce the power dissipated in the enclosure by locating the power section outside the enclosure. 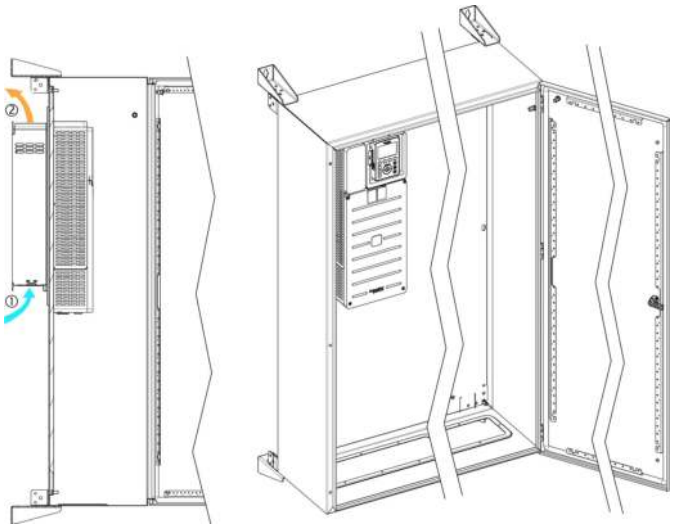 This mounting type requires the dedicated flange-mounting kit. Refer to www.se.com. **NOTE:** Use ProClima software available on www.se.com to support you to integrate Altivar Process in an enclosure.
A	Individual IP21 and IP55	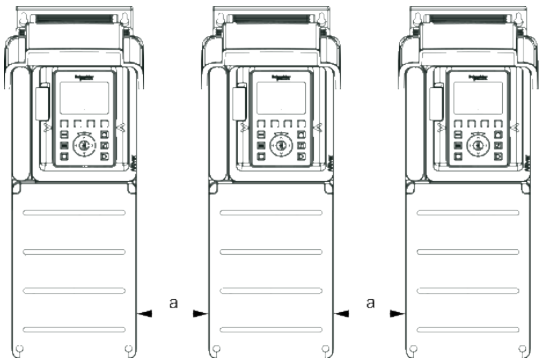 Frame sizes 1, 2, 3, 3S and 5S: a ≥ 100 mm (3.9 in.) Frame sizes 4, 5 and 6: a ≥ 110 mm (4.33 in.) Frame size 7, 3Y, 5Y, FS1, FS2, A, B, C, FSA and FSB: no restriction of clearance

Mounting		Figure
Type	**Description**	
B	Side by side IP20	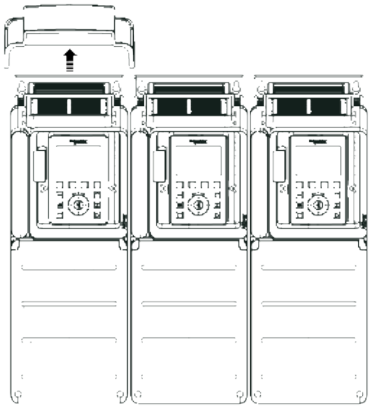 Frame sizes 1, 2, 3, 3S, 3Y, 5S, 5Y and 7: possible, regardless of the number of drives installed side by side Frame sizes 4 and 5: possible, 2 drives only Frame size 6: only at ambient temperature lower than 40 °C (104 °F)
C	Individual IP20	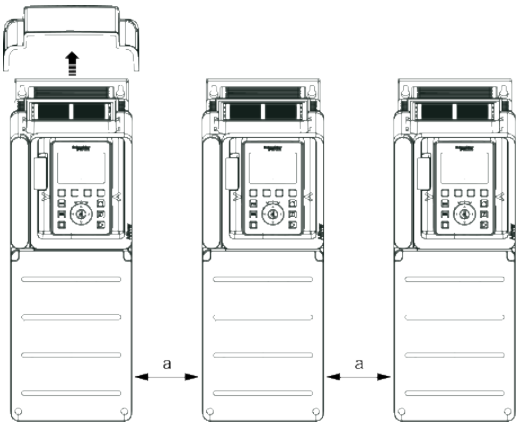 Frame sizes 1, 2, 3, 3S, 3Y, 5S, 5Y and 7: no restriction of clearance Frame sizes 4, 5 and 6: a ≥ 110 mm (4.33 in.)

Clearances and Mounting Position - Wall Mounting

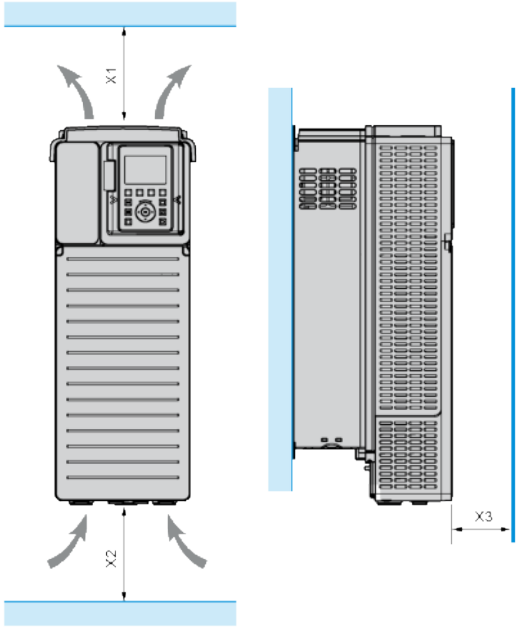

Minimum clearance regarding the drive frame size

Frame Size	X1	X2	X3
1...5, 3S, 3Y, 5S, 5Y	≥ 100 mm (3.94 in.)	≥ 100 mm (3.94 in.)	≥ 10 mm (0.39 in.)
A...C	≥ 100 mm (3.94 in.)	≥ 100 mm (3.94 in.)	≥ 10 mm (0.39 in.)
6	≥ 250 mm (10 in.)	≥ 250 mm (10 in.)	≥ 100 mm (3.94 in.)
7	≥ 200 mm (7.87 in.)	≥ 150 mm (5.90 in.)	≥ 10 mm (0.39 in.)

X1: free space in top of the drive

X2: free space in lower part of the drive

X3: free space in front of the drive. Please note that the use of the optional additional module support VW3A3800 will increase the overall depth of the drive by 49 mm (2 in.).

Frame Size 7 Drive - IP23 Mounting in Enclosure

Install the drive as described below:

Installation Procedure

Step	Action	Drawing and Comments
1	Install the drive on an enclosure baseplate	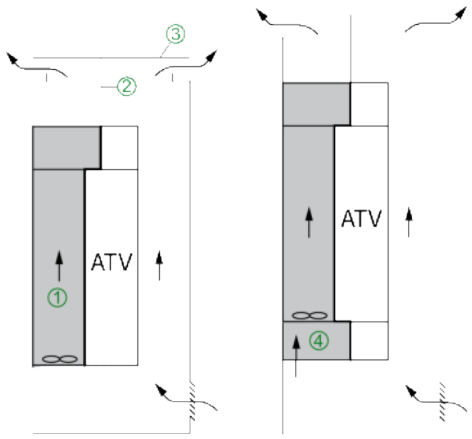
2	Install the DC choke in accordance with the mounting instructions, page 147.	
3	Install the UL Type 1, IP21 kit ④ for attaching the power cables, in accordance with the mounting instructions supplied with the kit	
4	Extend the IP54 duct ① between the upper outlet of the DC choke and the top of the enclosure ②. Fixing points are provided for this purpose on the top of the DC choke.	
5	Add a plate ③ approximately 150 mm (6 in.) from the top of the enclosure over the air outlet opening to prevent foreign bodies falling into the drive cooling duct.	The air inlet can be via a grille on the lower part of front panel of the enclosure door, in accordance with the required flow rates given in the above table.

NOTE:

- If the air in the power circuit is totally evacuated to the outside, very few power is dissipated inside the enclosure.
- Connect all the additional metal parts to ground using the strips.
- The design of the UL Type 1, IP21 kit ④ (to be ordered as an option) is based on the same principle as the DC choke, and has an IP54 duct to help guide the incoming air.

Frame Size 7 Drive - IP54 Mounting in Enclosure

Install the drive as described in the IP23 mounting section with the following additional points to obtain an IP54 enclosure:

Step	Action	Drawing and Comments
1	Do not make an air outlet hole for the control section. Do not make an air inlet hole in the enclosure door. In the power section, the air will enter through the lower part of the enclosure via a plinth added for this purpose.	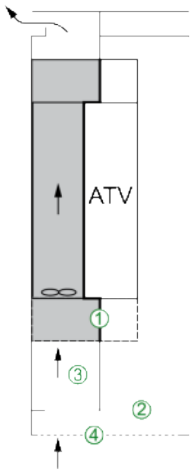
2	Install the IP21 UL Type 1 kit ①, if required in accordance with the mounting instructions supplied with the kit	
3	Add an enclosure baseplate ② designed to provide IP54 protection around the power cables.	
4	Add an air evacuation duct ③ between the baseplate and the duct of the UL type 1 conformity kit. The conformity kit enables an extension duct to be mounted. Drill a hole in the base of the enclosure to allow air to enter. Place seals around the duct that has been added to maintain IP54 protection.	
5	Add a 200 mm plinth ④ at the lower part of the enclosure with grilles to allow air to enter.	
6	Use the dissipated power table below to calculate the enclosure dimensions.	

NOTE:

- Connect all the additional metal parts to ground using the strips.

Power dissipated by the control section inside the enclosure

These levels of power dissipation are given for operation at nominal load and for the factory-set switching frequency.

Catalog Number	Dissipated Power in W (1)
ATV930C22N4	451
ATV930C25N4C	606
ATV930C31N4C	769

(1) Add 7W to this value for each option card added

Clearances and Mounting Position - Floor Standing

IP21 Drives	IP54 Drives
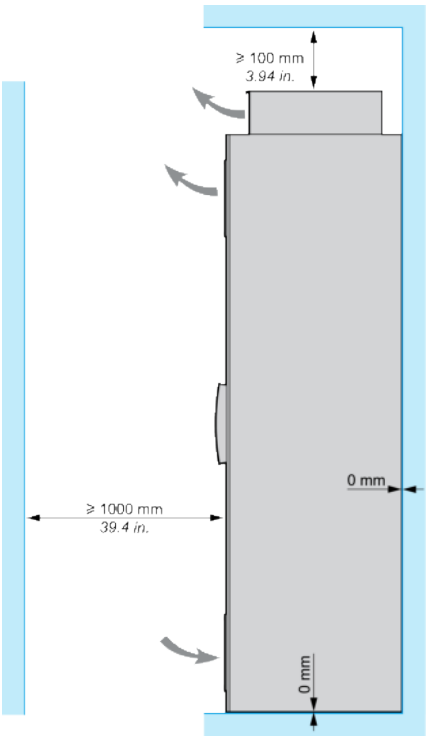	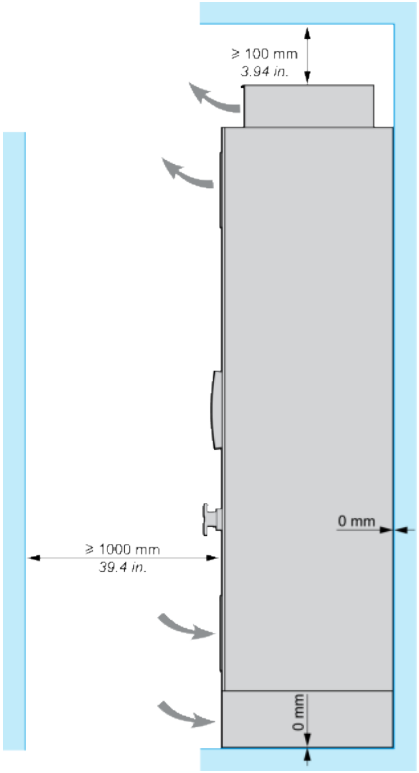

General Mounting Instructions

- Mount the device in a vertical position. This is required for cooling the device.
- Attach it on the mounting surface in compliance with standards, using 4 screws with captive washer according to the table given in Mounting Procedures, page 141.
- The use of washers is required with all mounting screws.
- Tighten the fixation screws.
- Do not mount the device close to heat sources.
- Avoid environmental effects like high temperatures and high humidity as well as dust, dirt and conductive gases.
- Adhere to the minimum installation distances for required cooling.
- Do not mount the device on flammable materials.
- Install the Altivar Process floor standing drive on a solid, vibration-free ground.

Power Dissipated For Enclosed Drives and Required Air Flow

Wall Mounting Drives

Catalog Number (1)	Frame Size	Power Dissipated at Nominal Load in Normal Duty (2)			Power Dissipated at Nominal Load in Heavy Duty (2)			Minimum air flow rate required	
		Forced Cooled Area	Natural Cooled Area	Total	Forced Cooled Area	Natural Cooled Area	Total		
		(W)	(W)	(W)	(W)	(W)	(W)	(m^3/hour)	(ft^3/min)
ATV930U07M3	1	33	26	59	15	26	41	38	22
ATV930U15M3	1	61	29	90	28	27	55	38	22
ATV930U22M3	1	85	31	116	54	29	83	38	22
ATV930U30M3	1	118	33	151	83	32	115	38	22
ATV930U40M3	1	163	37	200	111	33	144	38	22
ATV930U07N4	1	24	26	50	14	25	39	38	22
ATV930U15N4	1	47	27	74	21	26	47	38	22
ATV930U22N4	1	69	29	98	40	27	67	38	22
ATV930U30N4	1	89	30	119	59	28	87	38	22
ATV930U40N4	1	111	31	142	79	29	108	38	22
ATV930U55N4	1	166	34	200	106	31	137	38	22
ATV930U55M3	2	203	52	255	139	47	186	103	61
ATV930U75N4	2	213	46	259	150	43	193	103	61
ATV930D11N4	2	297	52	349	186	47	233	103	61
ATV930U22S6X	2	57	52	109	38	51	89	103	61
ATV930U40S6X	2	78	54	132	43	53	96	103	61
ATV930U55S6X	2	111	56	167	79	54	133	103	61
ATV930U75S6X	2	144	59	203	99	56	155	103	61
ATV930D11S6X	2	188	63	251	136	59	195	103	61
ATV930D15S6X	2	243	65	308	194	62	256	103	61
ATV930U75M3	3	353	75	428	247	70	317	215	127
ATV930D11M3	3	532	86	618	298	76	374	215	127

Catalog Number (1)	Frame Size	Power Dissipated at Nominal Load in Normal Duty (2)			Power Dissipated at Nominal Load in Heavy Duty (2)			Minimum air flow rate required	
		Forced Cooled Area	Natural Cooled Area	Total	Forced Cooled Area	Natural Cooled Area	Total		
		(W)	(W)	(W)	(W)	(W)	(W)	(m^3/hour)	(ft^3/min)
ATV930D15N4	3	424	76	500	260	70	330	215	127
ATV930D18N4	3	534	82	616	369	76	445	215	127
ATV930D22N4	3	583	87	670	451	82	533	215	127
ATV930D18S6	3S	386	82	468	314	78	392	330	194
ATV930D22S6	3S	507	86	593	394	81	475	330	194
ATV930U22Y6	3Y	44	67	111	34	67	101	330	194
ATV930U30Y6	3Y	59	69	128	44	67	111	330	194
ATV930U40Y6	3Y	77	69	146	59	69	128	330	194
ATV930U55Y6	3Y	104	70	174	77	69	146	330	194
ATV930U75Y6	3Y	139	72	211	104	70	174	330	194
ATV930D11Y6	3Y	202	75	277	139	72	211	330	194
ATV930D15Y6	3Y	278	78	356	202	75	277	330	194
ATV930D18Y6	3Y	385	82	467	278	78	356	330	194
ATV930D22Y6	3Y	474	86	560	385	82	467	330	194
ATV930D30Y6	3Y	557	90	647	474	86	560	330	194
ATV930D15M3	4	589	112	701	412	100	512	240	141
ATV930D18M3	4	737	123	860	527	112	639	240	141
ATV930D22M3	4	873	134	1007	641	123	764	240	141
ATV930D30N4	4	730	113	843	485	101	586	240	141
ATV930D37N4	4	908	122	1,030	661	113	774	240	141
ATV930D45N4	4	1,078	132	1,210	780	123	903	240	141
ATV930D30M3(C)	5	1,077	169	1,246	747	147	894	295	174
ATV930D37M3(C)	5	1,407	189	1,596	1,013	169	1,182	295	174
ATV930D45M3(C)	5	1,694	208	1,902	1,226	188	1,414	295	174
ATV930D55N4(C)	5	1,073	155	1,228	776	143	919	295	174
ATV930D75N4(C)	5	1,601	184	1,785	987	156	1,143	295	174
ATV930D90N4(C)	5	1,899	205	2,104	1,364	185	1,549	295	174
ATV930D30S6	5S	471	105	576	385	100	485	406	239
ATV930D37S6	5S	608	114	722	480	106	586	406	239
ATV930D45S6	5S	747	121	868	616	113	729	406	239
ATV930D55S6	5S	991	136	1,127	727	120	847	406	239
ATV930D75S6	5S	1,240	148	1,388	996	136	1,132	406	239
ATV930D37Y6	5Y	572	116	688	417	108	525	406	239
ATV930D45Y6	5Y	719	123	842	572	116	688	406	239
ATV930D55Y6	5Y	881	131	1,012	719	123	842	406	239
ATV930D75Y6	5Y	1,106	144	1,250	848	132	980	406	239
ATV930D90Y6	5Y	1,472	162	1,634	1,106	144	1,250	406	239
ATV930D55M3C	6	1,898	310	2,208	1,485	284	1,769	600	353
ATV930D75M3C	6	2,865	362	3,227	1,903	310	2,213	600	353
ATV930C11N4(C)	6	2,318	320	2,638	1,795	292	2,087	600	353
ATV930C13N4(C)	6	2,638	349	2,987	2,116	320	2,436	600	353

Catalog Number (1)	Frame Size	Power Dissipated at Nominal Load in Normal Duty (2)			Power Dissipated at Nominal Load in Heavy Duty (2)			Minimum air flow rate required	
		Forced Cooled Area	Natural Cooled Area	Total	Forced Cooled Area	Natural Cooled Area	Total		
		(W)	(W)	(W)	(W)	(W)	(W)	(m^3/hour)	(ft^3/min)
ATV930C16N4(C)	6	3,424	388	3,812	2,651	350	3,001	600	353
ATV930C22N4(C)	7A	4,508	706	5,214	3,120	615	3,735	860	506
ATV930C22N4MN	7A	4,532	707	5,239	3173	615	3,788	860	506
ATV930C22N4CMN	7A	4,532	707	5,239	3,173	615	3,788	860	506
ATV930C25N4C	7B	5,063	920	5,983	3,643	850	4,493	1,260	742
ATV930C31N4C	7B	6,313	1,019	7,332	4,517	920	5,437	1,260	742
ATV930C25N4CMN	7B	5,124	920	6,044	3,692	850	4,542	1,260	742
ATV930C31N4CMN	7B	6,287	1,019	7,306	4,522	919	5,441	1,260	742

(1) Size 1...5 drives: Including catalog numbers ATV930•••N4Z.

(2) First value is the power dissipated at nominal current in the forced cooled area of the drive. The second value is the power dissipated at nominal current in the natural cooled area, value used in case of installation using the flange-mounting kit, separate hot and control part in a cabinet. If the drive is installed in a standard cabinet, the sum of both values is to be taken into account.

Power Dissipated For Enclosed Drives and Required Air Flow - Floor Standing

Floor Standing Drives

Catalog Number ATV930 and ATV950	Power Dissipated in Normal Duty			Power Dissipated in Heavy Duty			Minimum Air Flow Rate Required	
	Forced Cooled Area	Natural Cooled Area	Total	Forced Cooled Area	Natural Cooled Area	Total		
	(W)	(W)	(W)	(W)	(W)	(W)	(m^3/hour)	(ft^3/min)
C11N4F	2,032	380	2,412	1,621	300	1,921	720	2,032
C13N4F	2,542	450	2,992	2,030	360	2,390	720	2,542
C16N4F	3,258	560	3,818	2,540	420	2,960	720	3,258
C20N4F	3,591	580	4,171	2,796	430	3,226	1,300	3,591
C25N4F	4,713	730	5,443	3,604	520	4,124	1,300	4,713
C31N4F	6,405	990	7,395	4,705	680	5,385	1,300	6,405

Air flow Cooling Diagrams - Floor Standing

These diagrams show the cooling air flow.

IP21 Drive	IP54 Drive
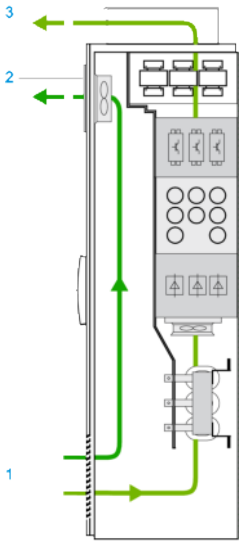 **1** Air inlet grid for power and control parts **2** Air outlet with fan, for control parts **3** Air outlet through metal grid for power part	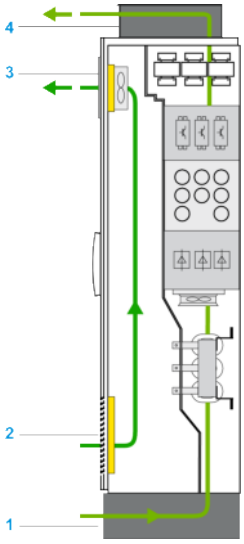 **1** Air inlet grid for power part **2** Air inlet grid for control part **3** Air outlet with fan, for control parts **4** Air outlet through metal grid for power part

Derating Curves

Description

Derating curves for the nominal drive current (In) as a function of temperature and switching frequency. Refer to the Mounting Conditions chapter, page 120 for the mounting types description.

Frame Size 1 - 200...240 V

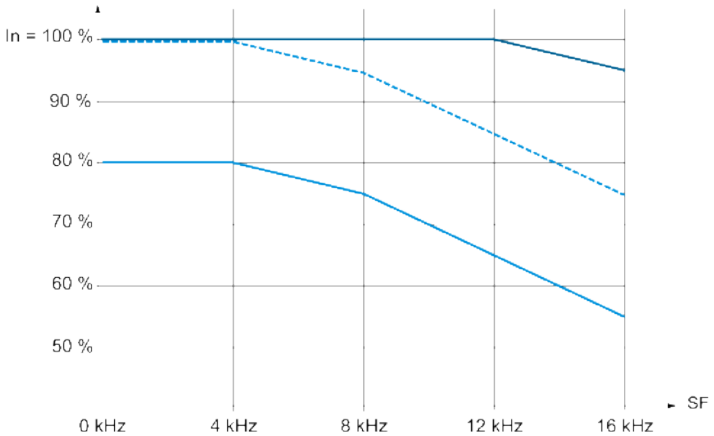

40 °C (104 °F) - Mounting type A, B and C

50 °C (122 °F) - Mounting type A, B and C

60 °C (140 °F) - Mounting type B and C

Frame Size 1 - 380...480 V

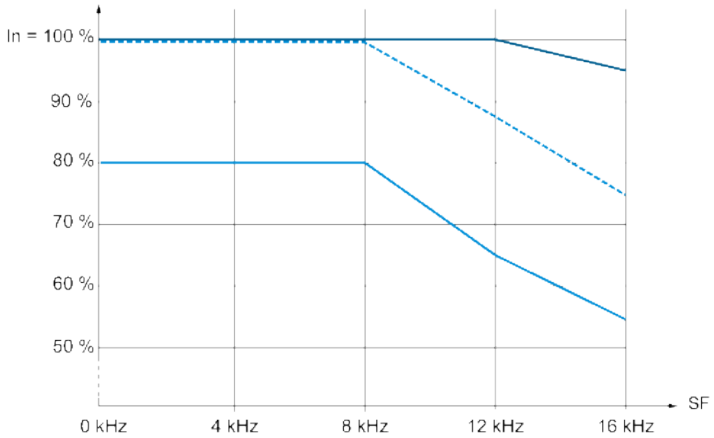

40 °C (104 °F) - Mounting type A, B and C

50 °C (122 °F) - Mounting type A, B and C

60 °C (140 °F) - Mounting type B and C

Frame Size 2 - 200...240 V

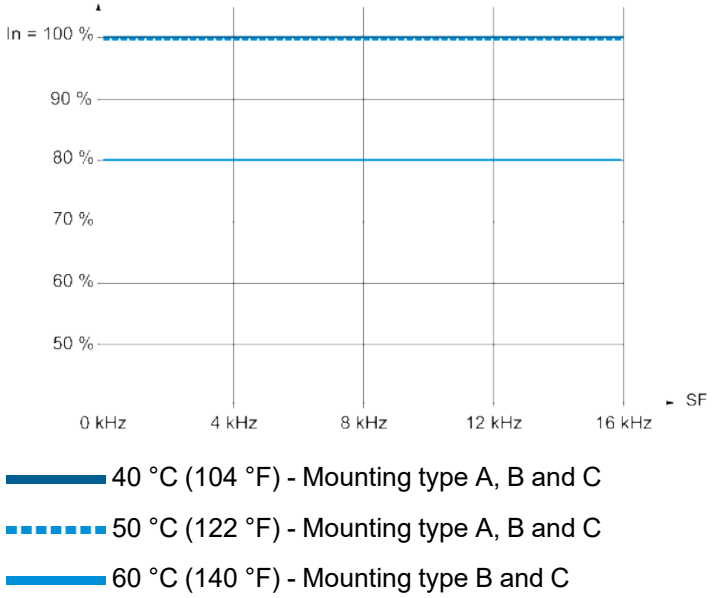

Frame Size 2 - 380...480 V

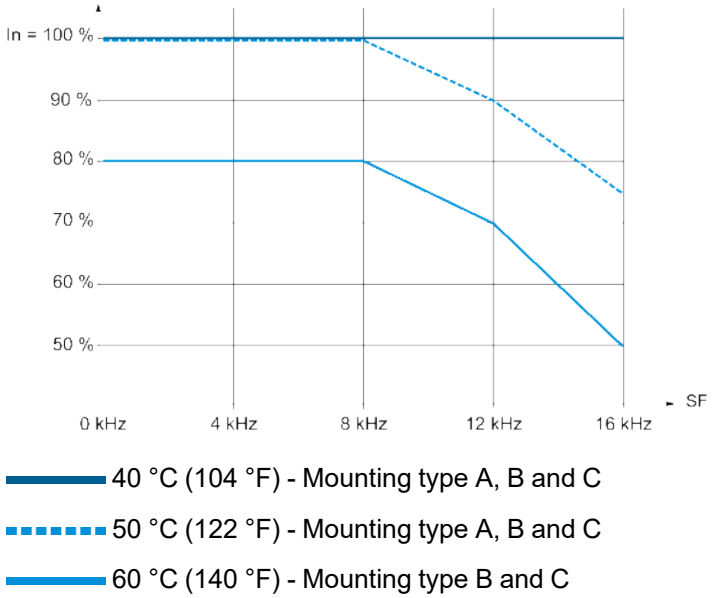

Frame Size 2 - 600 V

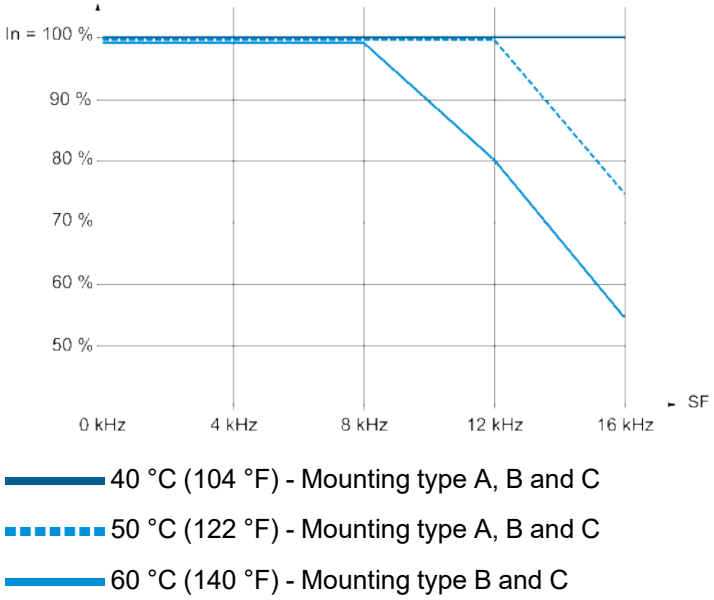

Frame Size 3 - 200...240 V

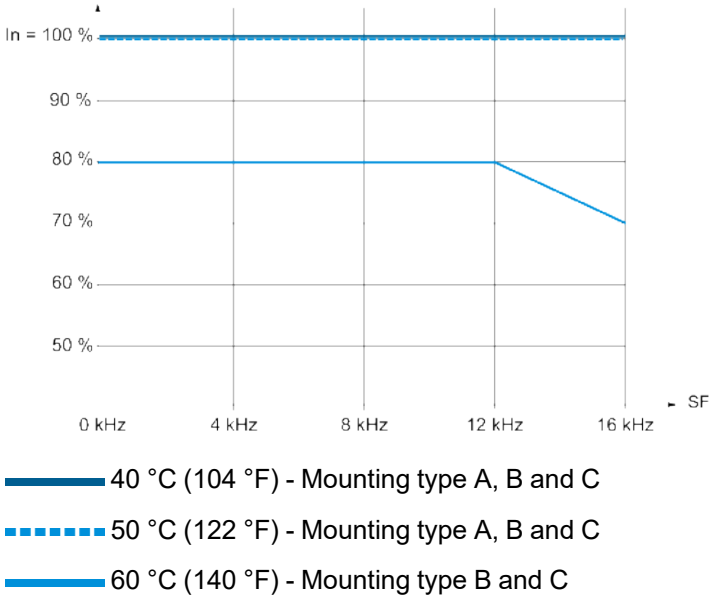

Frame Size 3 - 380...480 V

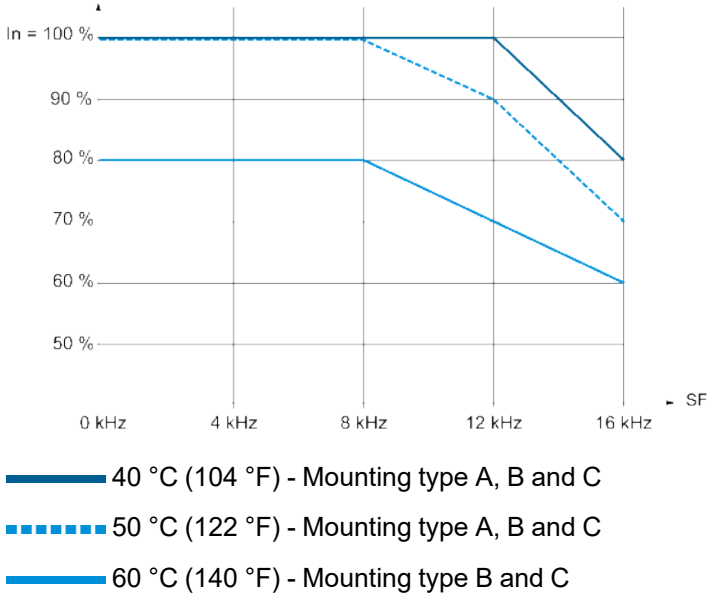

Frame Size 3S and 3Y - 600 V and 500...690 V

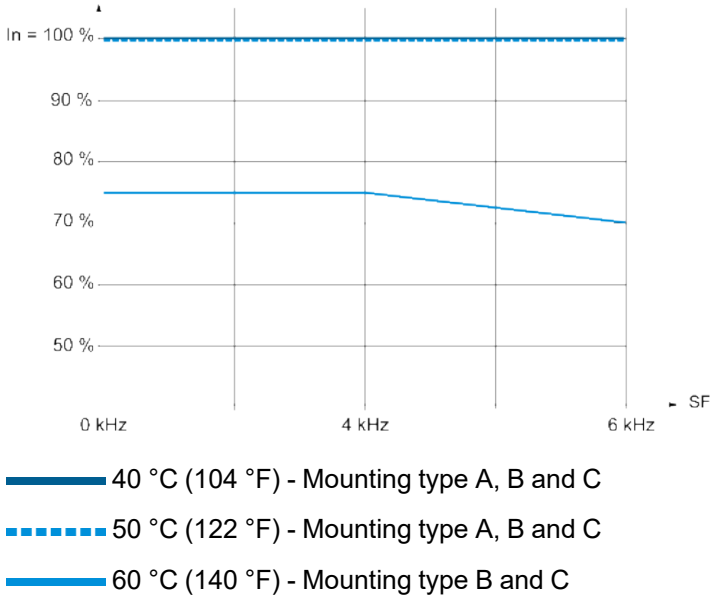

Frame Size 4 - 200...240 V

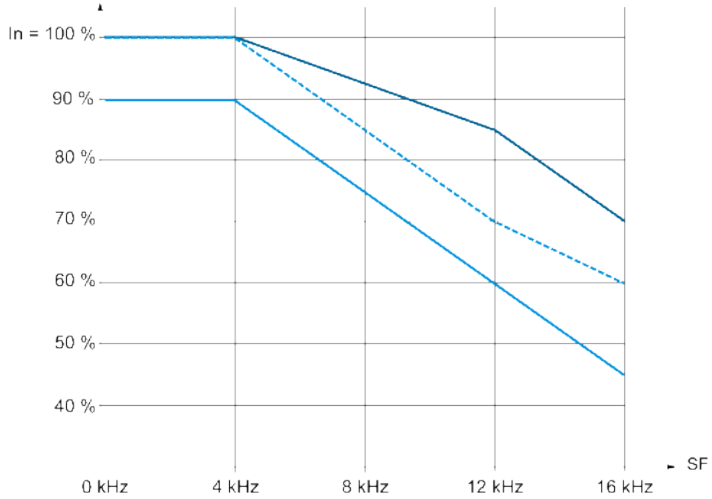

40 °C (104 °F) - Mounting type A, B and C

50 °C (122 °F) - Mounting type A, B and C

60 °C (140 °F) - Mounting type B and C

Frame Size 4 - 380...480 V

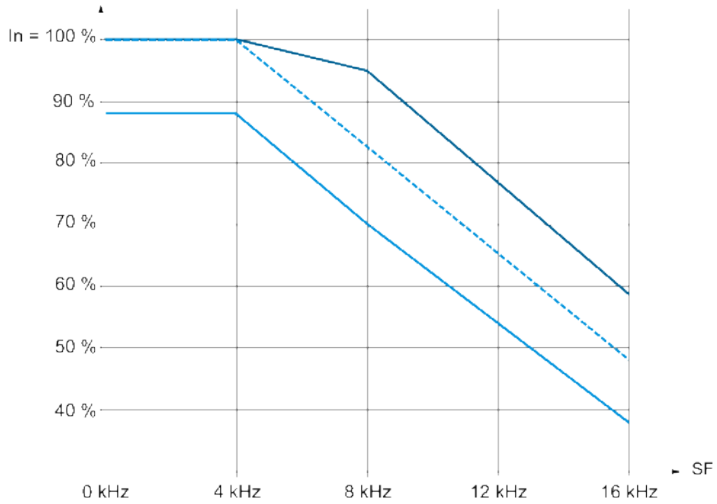

40 °C (104 °F) - Mounting type A, B and C

50 °C (122 °F) - Mounting type A, B and C

60 °C (140 °F) - Mounting type B and C

Frame Size 5 - 200...240 V

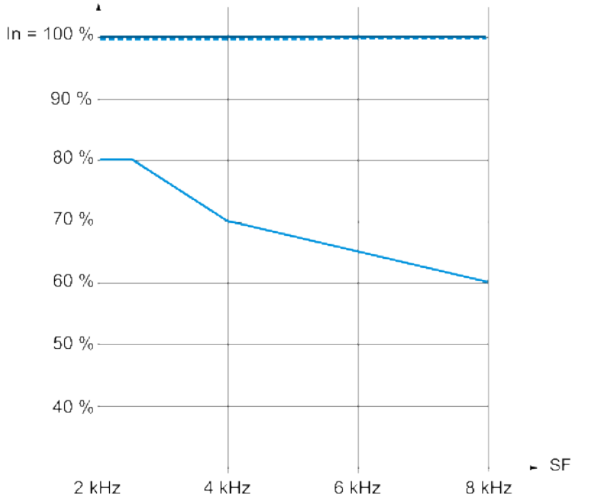

40 °C (104 °F) - Mounting type A, B and C

50 °C (122 °F) - Mounting type A, B and C

60 °C (140 °F) - Mounting type B and C

Frame Size 5 - 380...480 V -

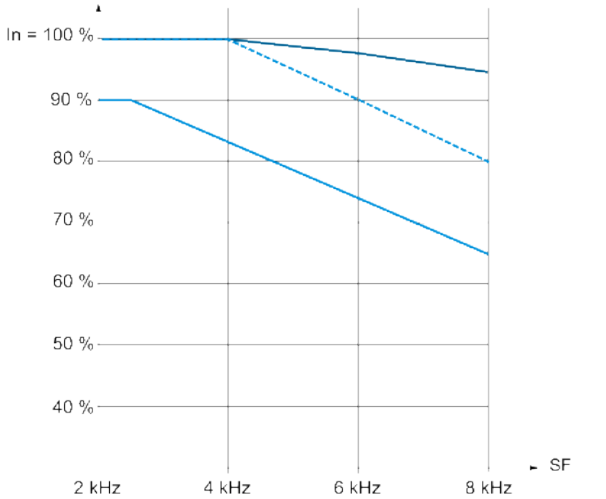

40 °C (104 °F) - Mounting type A, B and C

50 °C (122 °F) - Mounting type A, B and C

60 °C (140 °F) - Mounting type B and C

Frame Size 5S and 5Y - 600 V and 500...690 V

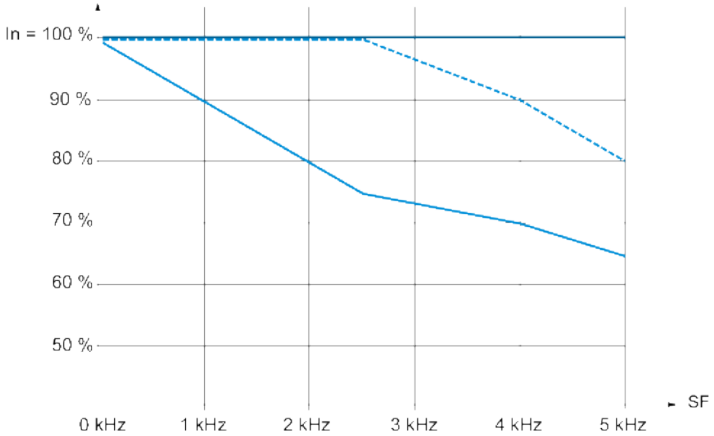

40 °C (104 °F) - Mounting type A, B and C

50 °C (122 °F) - Mounting type A, B and C

60 °C (140 °F) - Mounting type B and C

Frame Size 6 - 200...240 V and 380...480 V

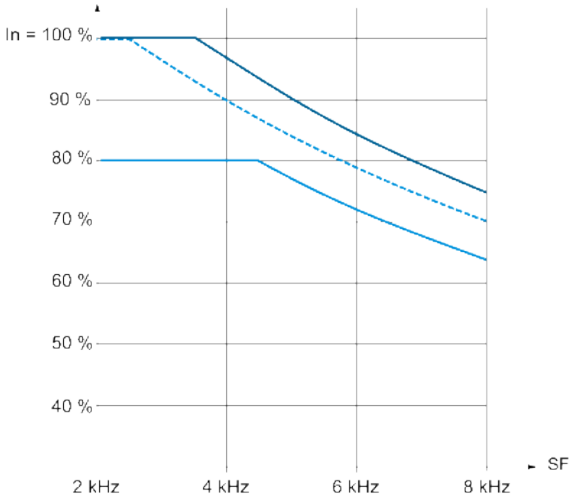

40 °C (104 °F) - Mounting type A, B and C

50 °C (122 °F) - Mounting type A and C

60 °C (140 °F) - Mounting type C

Frame Size 7A - 380...480 V - 220 kW

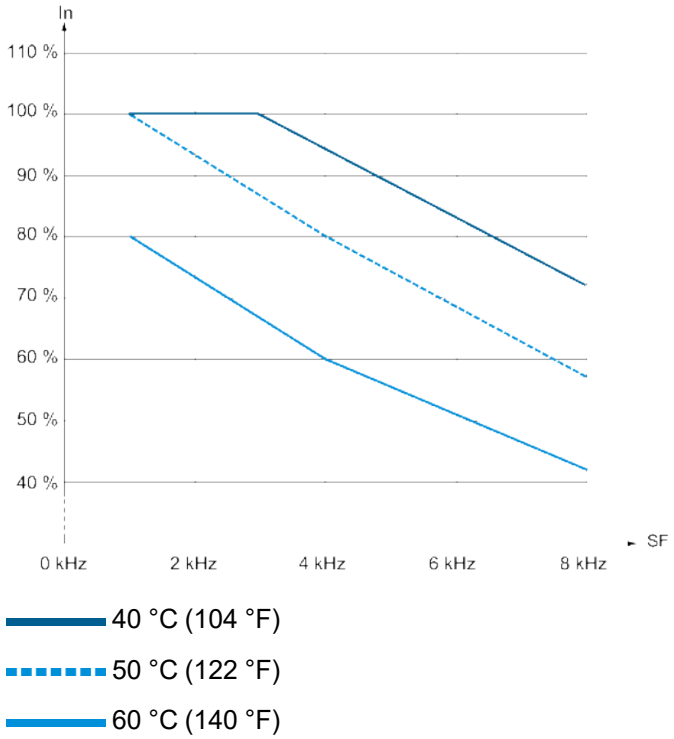

Frame Size 7B - 380...480 V - 250 kW

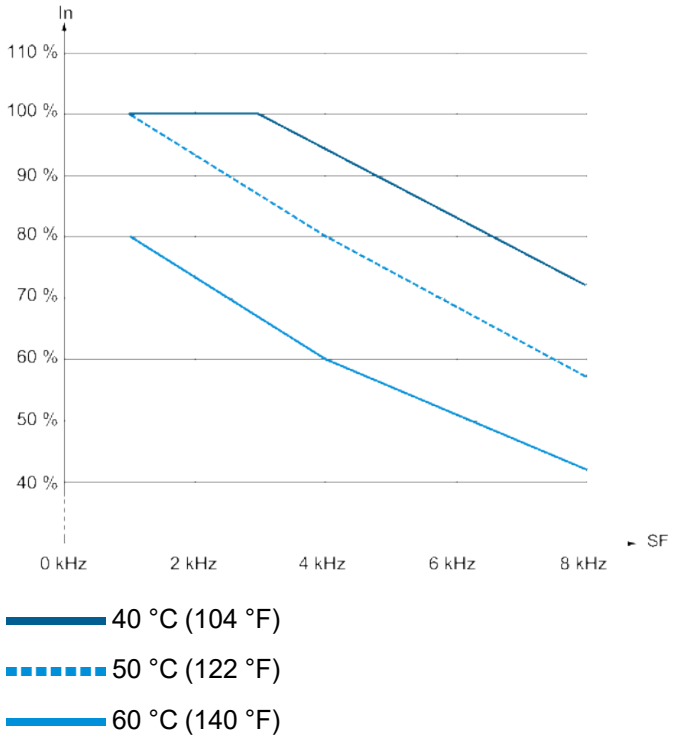

Frame Size 7B - 380...480 V - 315 kW

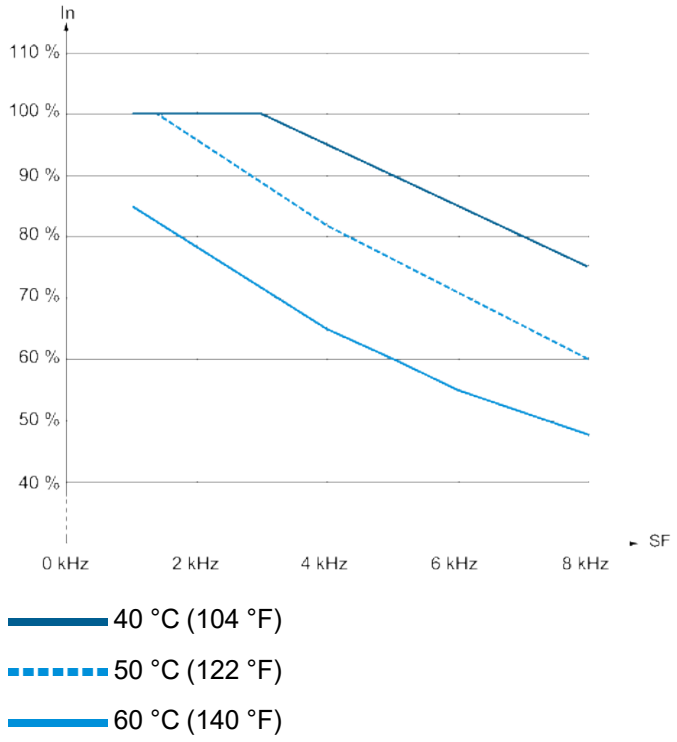

Frame Size A up to ATV950D11N4

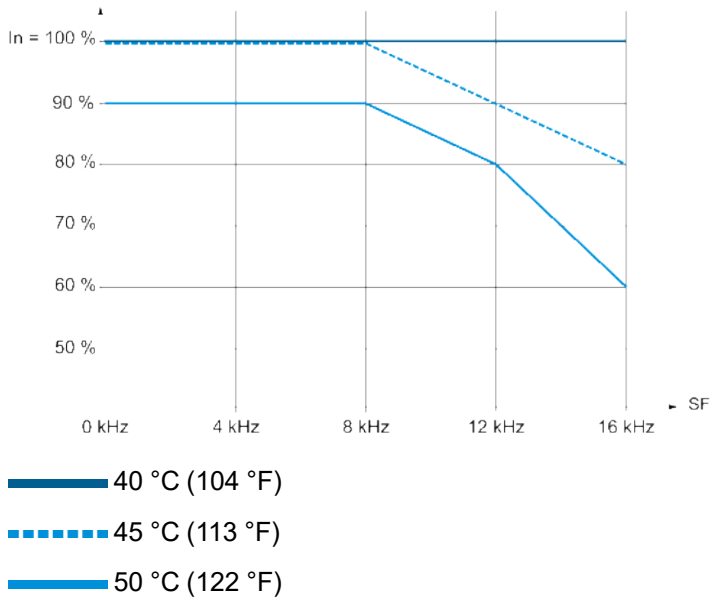

Frame Size A, ATV950D15N4 to D22N4

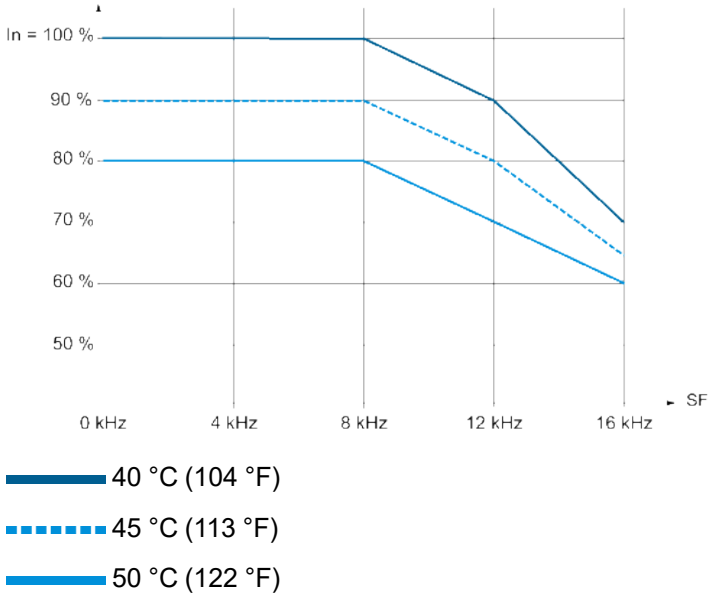

Frame Size B

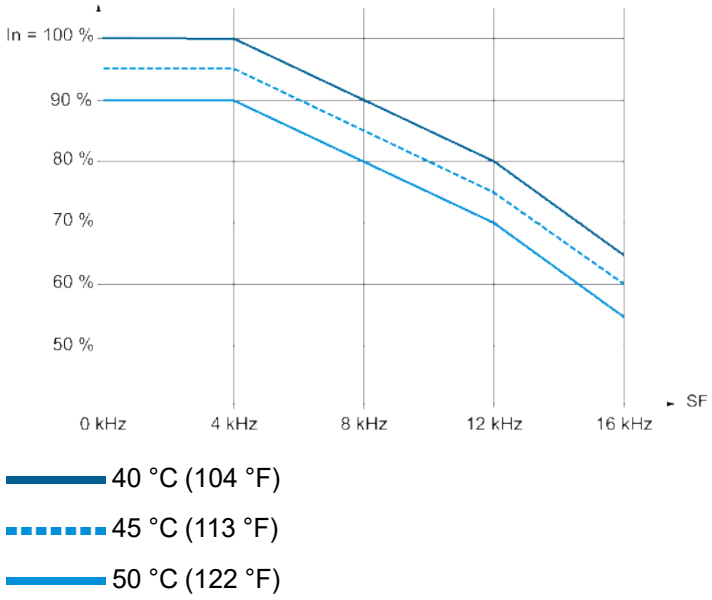

Frame Size C

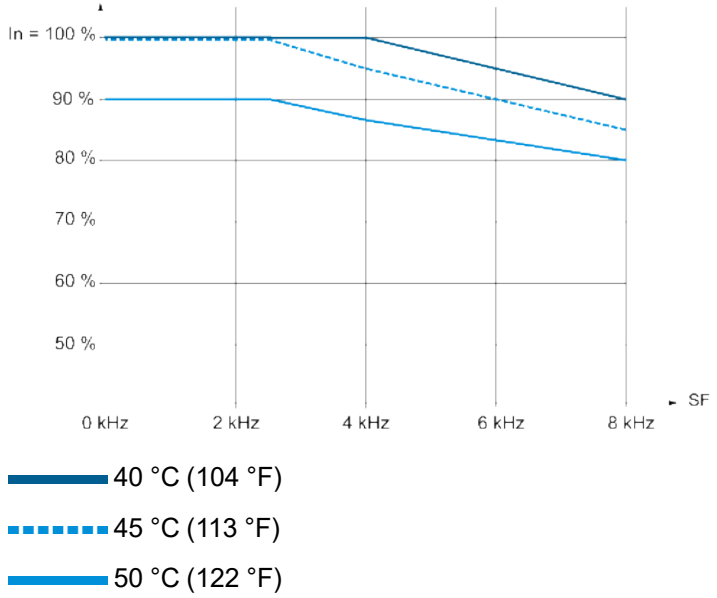

Floor Standing Drives - All Frame Sizes - 380...440 V - Normal Duty

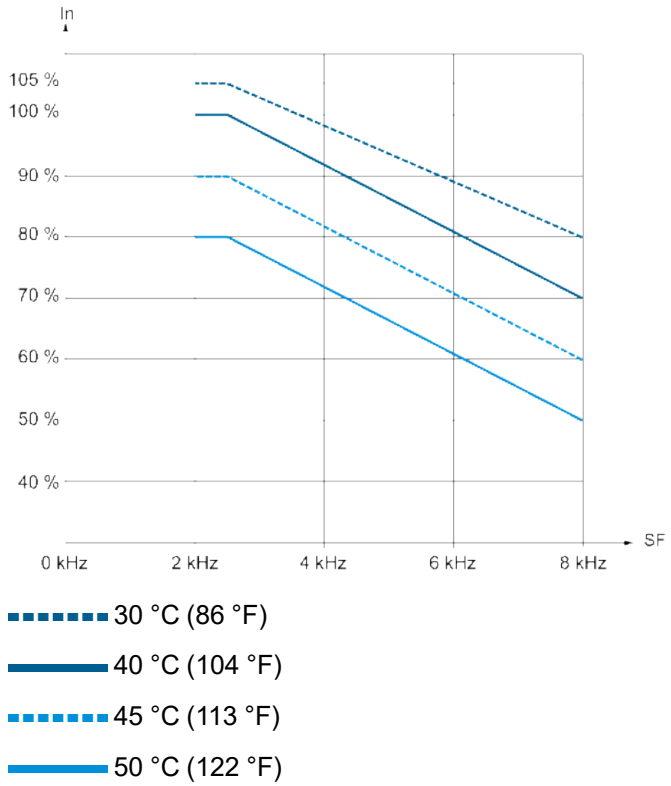

Floor Standing Drives - All Frame Sizes - 380...440 V - Heavy Duty

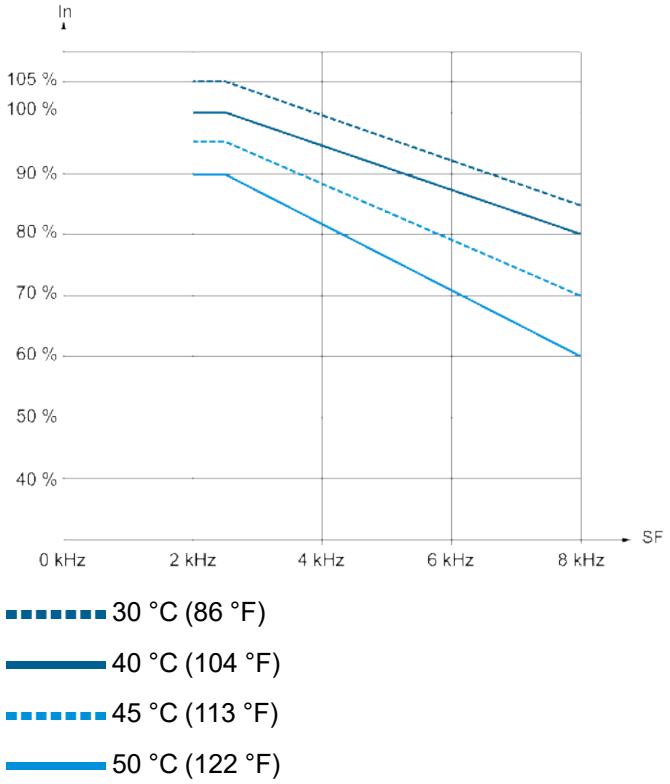

Mounting Procedures

Mounting Screws

Frame Size	Screw diameter	Hole diameter
1	5 mm (0.2 in)	6 mm (0.24 in)
2	5 mm (0.2 in)	6 mm (0.24 in)
3	5 mm (0.2 in)	6 mm (0.24 in)
3S	5 mm (0.2 in)	6 mm (0.24 in)
3Y	5 mm (0.2 in)	6 mm (0.24 in)
4	6 mm (0.24 in)	7 mm (0.28 in)
5	8 mm (0.31 in)	9 mm (0.35 in)
5S	8 mm (0.31 in)	9 mm (0.35 in)
5Y	8 mm (0.31 in)	9 mm (0.35 in)
6	10 mm (0.4 in)	11.5 mm (0.45 in)
7	10 mm (0.4 in)	11.5 mm (0.45 in)
A	5 mm (0.2 in)	6 mm (0.24 in)
B	8 mm (0.31 in)	9 mm (0.35 in)
C	10 mm (0.4 in)	11.6 mm (0.45 in)
FS1	12 mm (0.47 in)	13 mm (0.51 in)
FS2	12 mm (0.47 in)	13 mm (0.51 in)
FSA	10 mm (0.4 in)	12.5 mm (0.49 in)
FSB	10 mm (0.4 in)	12.5 mm (0.49 in)

Mounting Procedure For Frame Sizes 1 to 3, 200...240 V and 380...480 V, IP21 Drives, WITHOUT Marking on The Upper Side of The Top Cover

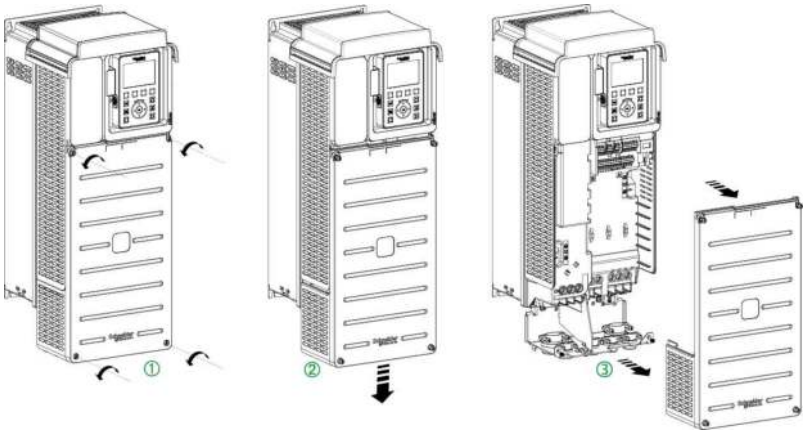

Perform the following instructions:

Step	Action
1	Unscrew the 4 screws attaching the front cover
2	Slide down the front cover
3	Pull the front cover and remove it

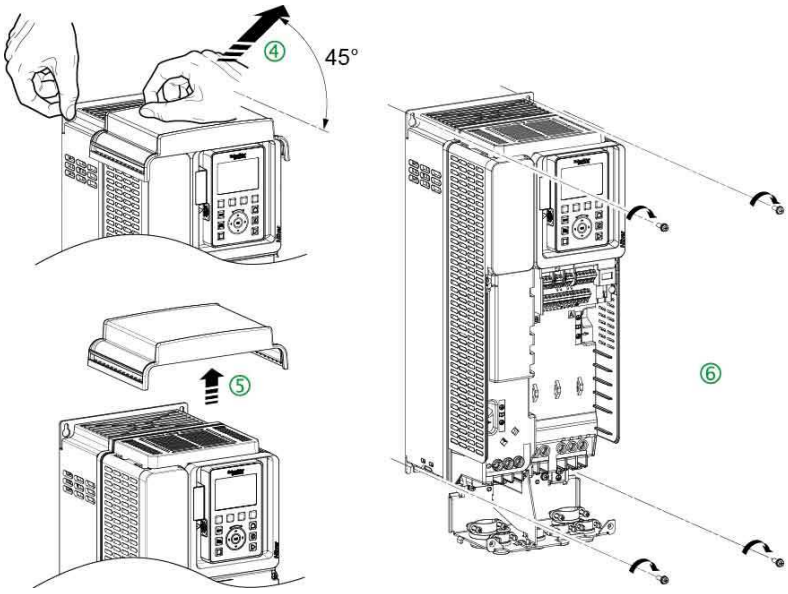

Perform the following instructions:

Step	Action
4	Pull the top cover from back to front.
5	Remove the top cover (see the video).
6	Attach the drive on the mounting surface using the screws with captive washer, according to the table above, page 141.
7	Refit the top cover to help prevent extra parts to fall into the drive during wiring operation or if IP21 degree of protection is requested.

Mounting Procedure For Frame Sizes 1 to 3, 200...240 V and 380...480 V, IP21 Drives, WITH Marking on The Upper Side of The Top Cover

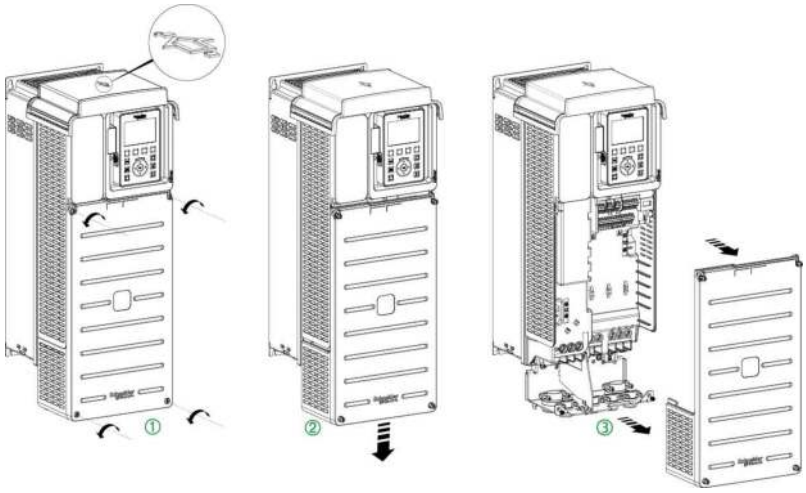

Perform the following instructions:

Step	Action
1	Unscrew the 4 screws attaching the front cover
2	Slide down the front cover
3	Pull the front cover and remove it

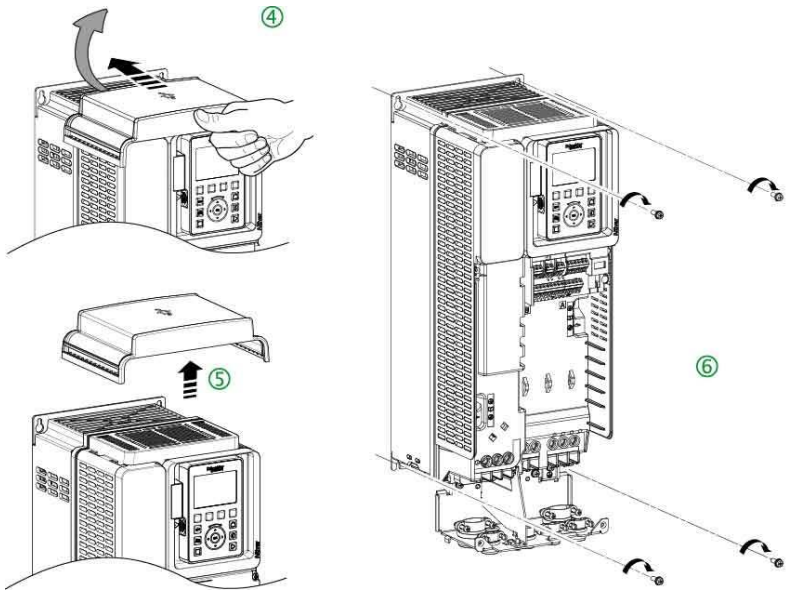

Perform the following instructions:

Step	Action
4	Push the top cover from front to back
5	Remove the top cover
6	Attach the drive on the mounting surface using the screws with captive washer, according to the table above, page 141.
7	Refit the top cover to help prevent extra parts to fall into the drive during wiring operation or if IP21 degree of protection is requested.

Mounting Procedure For Frame Sizes 3S and 5S, for 600 V Supply Mains

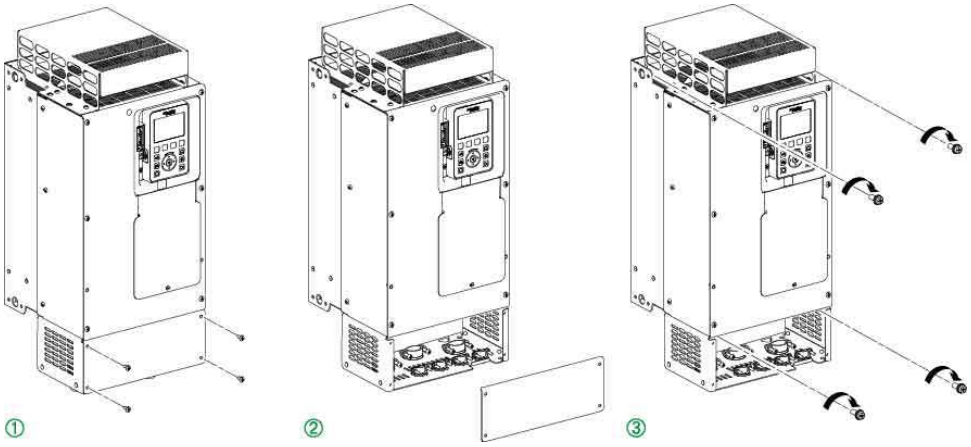

Perform the following instructions:

Step	Action
1	Unscrew the 4 screws attaching the lower front cover.
2	Remove the lower front cover to access the lower fixing holes.

Mounting Procedure For Frame Sizes 4 and 5, for 200...240 V and 380...480 V Supply Mains, IP21 Drives

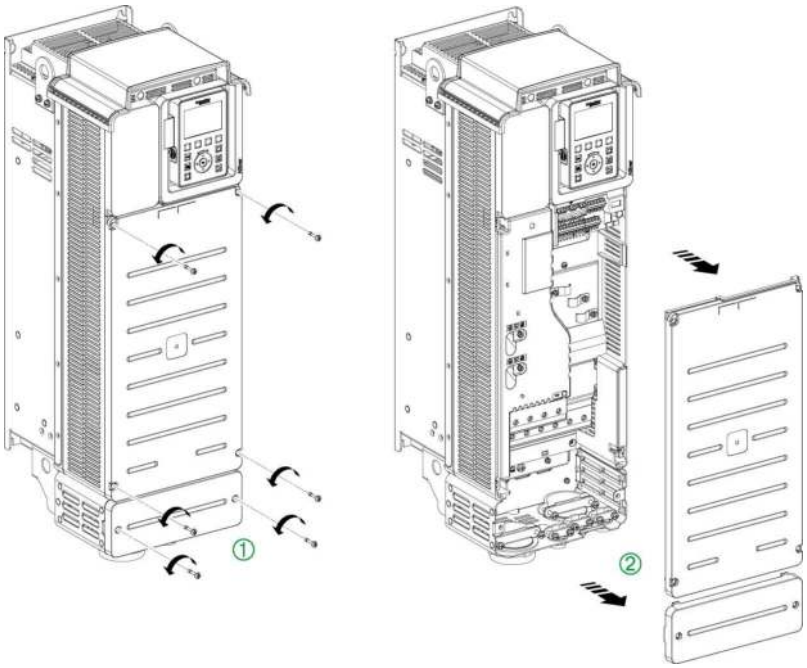

Perform the following instructions:

Step	Action
1	Unscrew the 6 screws (frame size 4) or the 8 screws (frame size 5) attaching the front and bottom covers
2	Remove the covers

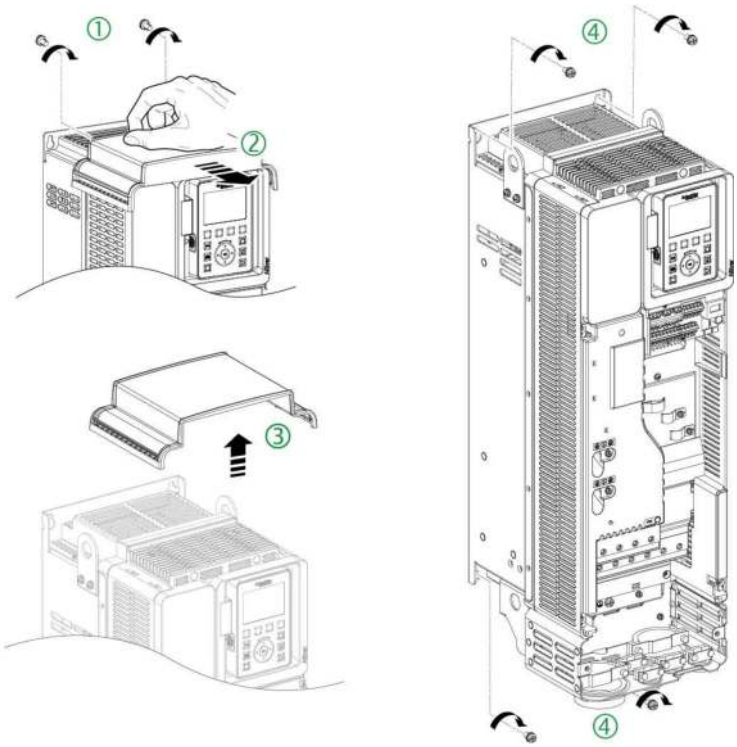

Perform the following instructions:

Step	Action
1	For Size 5 products, unscrew the 2 screws underneath the top cover
2	Slide the top cover from back to front
3	Remove the top cover
4	Screw the drive on the mounting surface using 4 screws with captive washer, according to the table above, page 141.
5	Refit the top cover on the drive.

Mounting Procedure For Frame Sizes 3Y and 5Y, Frame Sizes 1...5 for cabinet integration (ATV930•••N4Z), and Frame Sizes 6 and 7

NOTE: Due to accessible live parts on their lower part, these drives must be installed in enclosures or located behind enclosures or barriers, which comply at least with the requirements of IP2•, as per IEC61800-5-1.

Mounting the drive does not require preliminary dismantling operation. Simply mount the drive to its support using the 4 screws with captive washer, according to the table above, page 141.

Installing the EMC on Frame Sizes 3Y

Install the EMC plate supplied as described below. Tighten the 3 x M5 screws to 2.6 N·m (23 lbf.in)

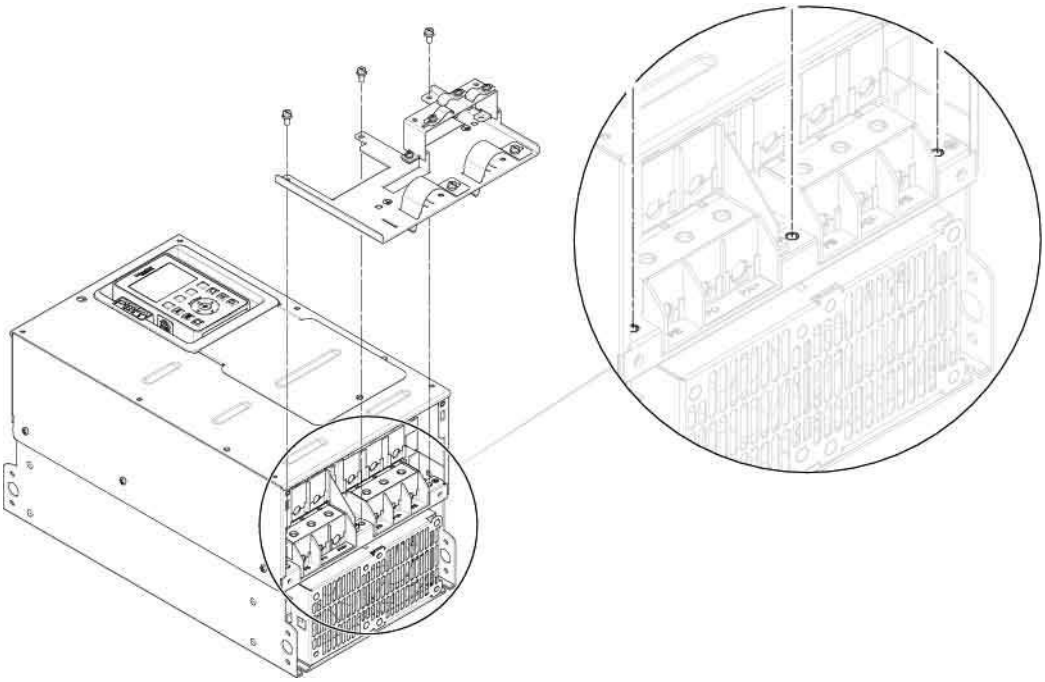

Installing the EMC on Frame Sizes 5Y

Install the EMC plate supplied as described below. Tighten the 2 x M8 screws to 7.3 N·m (65 lbf.in)

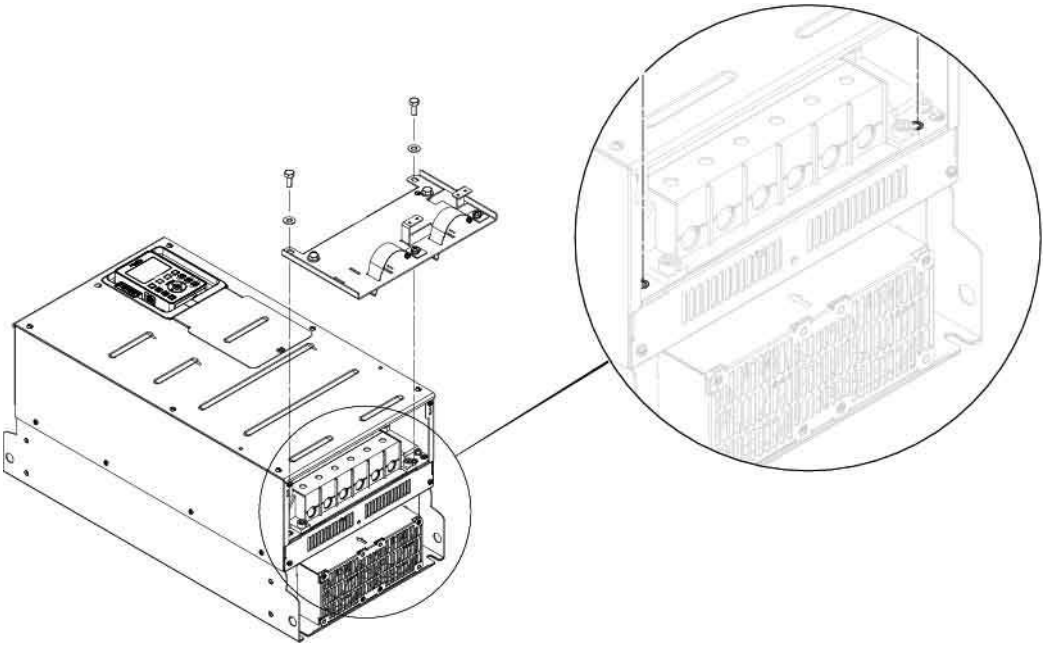

Installing the DC choke on Frame Sizes 7 Drives

This must be performed after mounting the drive and before wiring it. If a braking module is being used, install the module on the drive before mounting the DC choke. During installation, ensure that no liquid, dust or conductive objects fall into the drive.

Perform the following instructions to install the DC chokes:

Step	Action
1	Mount the DC choke housing ① on the wall, on top of the drive, using the 4 screws with captive washer, according to the table above. Ensure that the housing is tightly secured to the drive to maintain the IP54 seal of the ventilation duct.
2	Remove the front covers 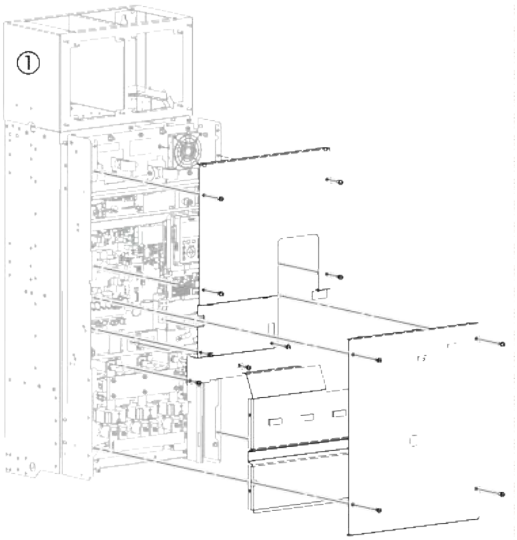
3	Install the DC choke ② on the housing ① using the 4 x M6 nuts provided. Tighten the nuts to 5.5 N·m (48.7 lbf.in) 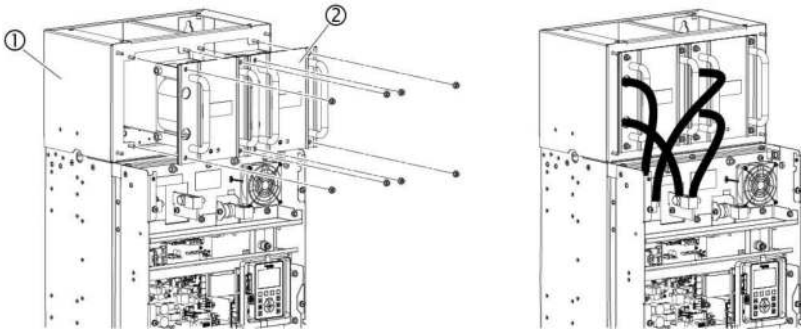
4	Connect the choke between the PO and PA/+ terminals on the drive using M12 screws. Tighten the screws to 45 N·m (398 lbf.in) 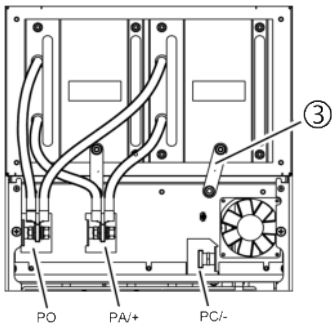 Connect the grounding strips ③ between the DC choke housing ① and the drive using M8 nuts. Tighten the nuts to 13.5 N·m (119.5 lbf.in).

Step	Action
5	Mount the cover ④ on the housing and secure it with the nuts ⑤ provided. 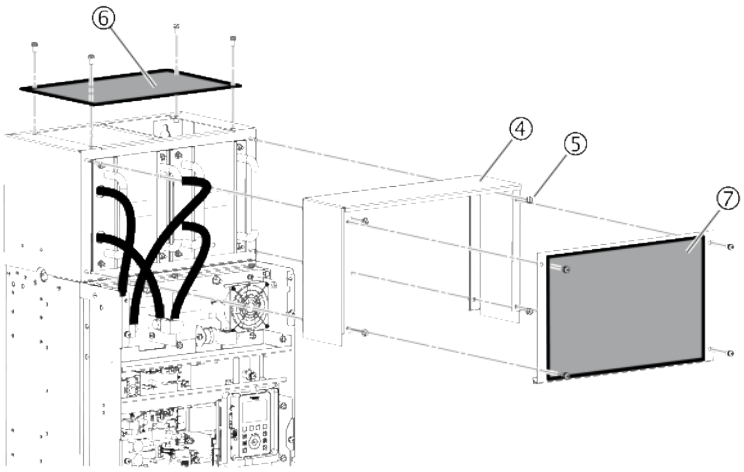 Mount panels ⑥ and ⑦ using the screws provided. Tighten the M6 nuts to 5.5 N·m (48.7 lbf.in).
6	Refit all the drive covers. Tighten the M5 nuts to 3.5 N·m (30.9 lbf.in).

NOTE:

- Once the choke has been installed, the degree of protection of the top of the drive is IP31.
- For ATV930•••••MN products, no DC choke housing is provided. Please order separately your Line choke.

Mounting Procedure For Frame Sizes A, B and C

Mounting the drive does not require preliminary dismantling operation. Simply mount the drive to its support using the 4 screws with captive washer, according to the table above, page 141.

Mounting Procedure for Floor Standing Drives

Installation and mounting procedures of the floor standing drives are described in the dedicated instruction sheet NVE57369 delivered with these drives and available on www.se.com.

Drive wiring

What's in This Part

Wiring Instructions....150
Specific Wiring Instructions For Wall Mounting Drives....156
Specific Wiring Instructions For Floor Standing Drives....157
Dimensioning of Power Part Cables for Floor Standing Drives....159
Cable Length Instructions....161
General Wiring Diagrams....163
Relay Contacts Wiring....168
Digital Inputs Wiring Depending on Sink / Source Switch Configuration....172
Pulse Train Output / Digital Output Switch Configuration....175
Characteristics of the Power Part Terminals....178
Wiring The Power Part....197
Electromagnetic Compatibility....221
Operation on an IT or Corner Grounded System....223
Disconnecting The Built-in EMC Filter....224
Arrangement and Characteristics of Control Block Terminals and Communication and I/O Ports....233
Control Terminals Electrical Data....236
Wiring The Control Part....239

Wiring Instructions

General Instructions

The entire installation procedure must be performed without voltage present.

⚠⚠DANGER

HAZARD OF ELECTRIC SHOCK, EXPLOSION OR ARC FLASH

Read and understand the instructions in **Product Related Information** chapter before performing any procedure in this chapter.

Failure to follow these instructions will result in death or serious injury.

⚠⚠DANGER

HAZARD OF ELECTRIC SHOCK, EXPLOSION, OR ARC FLASH

Before applying voltage to and configuring the product, verify that it is properly wired.

Failure to follow these instructions will result in death or serious injury.

The product has a leakage current greater than 3.5 mA. If the protective ground connection is interrupted, a hazardous touch current may flow if the product is touched.

⚠⚠DANGER

ELECTRIC SHOCK CAUSED BY HIGH LEAKAGE CURRENT

Verify compliance with all local and national electrical code requirements as well as all other applicable regulations with respect to grounding of the entire drive system installation.

Failure to follow these instructions will result in death or serious injury.

The values and products for IEC compliance are specified in the present manual. Refer to Prospective Short-Circuit Current, page 95.

Product may perform unexpected movements because of incorrect wiring, incorrect settings, incorrect data or other errors.

⚠WARNING

UNANTICIPATED EQUIPMENT OPERATION

- Carefully install the wiring in accordance with the EMC requirements.
- Do not operate the product with unknown or unsuitable settings or data.
- Perform a comprehensive commissioning test.

Failure to follow these instructions can result in death, serious injury, or equipment damage.

Cable Characteristics

Only use cables with insulator heat resistance of 75°C (167°F) min.

If you are using cables longer than 150 m (492 ft) between the drive and the motor, add output filters (for more details refer to the catalog).

Use a shielded cable to meet the requirements of Category C2 or C3 according to the standard IEC 61800-3, except when using a sinus filter. In this case, the use of a non-shielded motor cable is possible.

To limit the currents in common mode, use common mode output filters (ferrite) in order to reduce the circulating currents in the motor windings.

Standard linear capacity cables can be used with Altivar Process. Use of cables with lower linear capacity could increase cable length performances.

The overvoltage limitation function **[Motor surge limit.]** `SVL` enables you to increase the cable length while decreasing the torque performances. Refer to ATV900 Programming manual.

Power Part Cables Stripping lengths

Catalog Number and Frame Size [•] (1)		Cable Stripping Length	
		Input, in mm (in.)	Output, in mm (in.)
ATV930U07M3...U40M3	[1]	11 ± 1 (0.43 ± 0.04)	11 ± 1 (0.43 ± 0.04)
ATV930U07N4...U55N4	[1]	11 ± 1 (0.43 ± 0.04)	11 ± 1 (0.43 ± 0.04)
ATV930U55M3	[2]	11 ± 1 (0.43 ± 0.04)	11 ± 1 (0.43 ± 0.04)
ATV930U75N4...D11N4	[2]	11 ± 1 (0.43 ± 0.04)	11 ± 1 (0.43 ± 0.04)
ATV930U22S6X...U75S6X, D11S6X... D15S6X	[2]	11 ± 1 (0.43 ± 0.04)	11 ± 1 (0.43 ± 0.04)
ATV930U22Y6...U75Y6, D11Y6... D15Y6	[3Y]	20 ± 2 (0.79 ± 0.08)	20 ± 2 (0.79 ± 0.08)
ATV930U75M3...D11M3	[3]	20 ± 2 (0.79 ± 0.08)	20 ± 2 (0.79 ± 0.08)
ATV930D15N4...D22N4	[3]	20 ± 2 (0.79 ± 0.08)	20 ± 2 (0.79 ± 0.08)
ATV930D18S6, D22S6	[3S]	32 ± 3 (1.26 ± 0.12)	32 ± 3 (1.26 ± 0.12)
ATV930D18Y6...D30Y6	[3Y]	32 ± 3 (1.26 ± 0.12)	32 ± 3 (1.26 ± 0.12)
ATV930D15M3...D22M3	[4]	26 ± 2 (1.02 ± 0.08)	26 ± 2 (1.02 ± 0.08)
ATV930D30N4...D45N4	[4]	26 ± 2 (1.02 ± 0.08)	26 ± 2 (1.02 ± 0.08)
ATV930D30M3•...D45M3•	[5]	32 ± 3 (1.26 ± 0.12)	32 ± 3 (1.26 ± 0.12)
ATV930D55N4•...D90N4•	[5]	32 ± 3 (1.26 ± 0.12)	32 ± 3 (1.26 ± 0.12)
ATV930D30S6...D75S6	[5S]	32 ± 3 (1.26 ± 0.12)	32 ± 3 (1.26 ± 0.12)
ATV930D37Y6...D90Y6	[5Y]	32 ± 3 (1.26 ± 0.12)	32 ± 3 (1.26 ± 0.12)
ATV950U07N4...D11N4	[A]	11 ± 1 (0.43 ± 0.04)	11 ± 1 (0.43 ± 0.04)
ATV950U07N4E...D11N4E	[A]	11 ± 1 (0.43 ± 0.04)	11 ± 1 (0.43 ± 0.04)
ATV950D15N4, D18N4, D22N4	[A]	20 ± 2 (0.79 ± 0.08)	20 ± 2 (0.79 ± 0.08)
ATV950D15N4E...D22N4E	[A]	17 ± 2 (0.67 ± 0.08)	20 ± 2 (0.79 ± 0.08)
ATV950D30N4, D37N4, D45N4	[B]	26.2 ± 2 (1.03 ± 0.08)	26.2 ± 2 (1.03 ± 0.08)
ATV950D30N4E, D37N4E, D45N4E	[B]	21.5 ± 2.5 (0.85 ± 0.1)	21.5 ± 2.5 (0.85 ± 0.1)
ATV950D55N4, D75N4, D90N4	[C]	32 ± 3 (1.27 ± 0.12)	32 ± 3 (1.27 ± 0.12)
ATV950D55N4E, D75N4E, D90N4E	[C]	32 ± 3 (1.27 ± 0.12)	32 ± 3 (1.27 ± 0.12)
(1) Size 1...5 drives: Including catalog numbers ATV930•••N4 and ATV930•••N4Z			

Control Part Cables Stripping lengths

IO terminal	Cable Stripping Length in mm (in.)
R1A, R2B, R1C, R2A, R2C, R3A, R3C	11 (0.43)
STOA, STOB, 24V, 10V, AI1, COM, AI2, AI3, AQ1, AQ2 COM DQ-	7.5 ± 0.5 (0.29 ± 0.02)
P24, 0V, DI1, DI2, DI3, DI4, DI5, DI6, DI7, DI8, 24V DQ+	6.5 ± 0.5 (0.25 ± 0.02)

Control Part

⚠WARNING

UNANTICIPATED EQUIPMENT OPERATION

Verify that the digital and analog inputs and outputs are wired with the shielded, twisted pair cables specified in the present manual.

Failure to follow these instructions can result in death, serious injury, or equipment damage.

- Keep the control circuits away from the power cables. For digital and analog inputs/outputs, use shielded twisted cables with a pitch of 25...50 mm (1...2 in.)
- It is advisable to use cable ends, available on www.se.com.

NOTE:

- Analog inputs and outputs AIx, AQx, COM use shielded cable and each analog input and output has its own COM line.
- Each PTC input has its own COM line, not shared with other Inputs/Outputs.
- All digital inputs DIx use one common 24V line in source mode or one common COM line in sink mode. This 24V or COM line is used only for DIx.
- Digital output DQ+/DQ- uses a 24V or a COM line which is not shared with other Inputs/Outputs.
- Safe torque off inputs $\overline{\text{STOA}}$ / $\overline{\text{STOB}}$ use shielded cables and one common 24V line. This 24V line is used only for $\overline{\text{STOA}}$ / $\overline{\text{STOB}}$.

Residual Current Device

Direct current can be introduced in the protective ground conductor of this device. If a residual current device (RCD / GFCI) or a residual current monitor (RCM) is used for additional protection against direct or indirect contact, the following specific types must be used:

⚠ WARNING

DIRECT CURRENT CAN BE INTRODUCED INTO THE PROTECTIVE GROUND CONDUCTOR

- Use a Type A or Type F Residual Current Device (RCD / GFCI) or a Residual Current Monitor (RCM) for single-phase devices connected to a phase and to the neutral conductor.
- Use a Type B Residual Current Device (RCD / GFCI) or a Residual Current Monitor (RCM) that has approval for use with frequency inverters and is sensitive to all types of current for three-phase devices and for single-phase devices not connected to a phase and the neutral conductor.

Failure to follow these instructions can result in death, serious injury, or equipment damage.

Further conditions for use of a residual current device:

- The device has an increased leakage current at the moment power is applied. Use a residual current device (RCD / GFCI) or a residual current monitor (RCM) with a response delay.
- High-frequency currents must be filtered.

Due to high leakage current in standard operation, it is advisable to choose at least a 300 mA device.

If the installation requires a residual current device less than 300 mA, it can be possible to use a device lower than 300 mA by changing the IT switch position (drive sizes 5S and 5Y) or by removing the screws (drive sizes 1...7) according to the instructions given in the Operation on an IT System section, page 223.

If the installation includes several drives, provide one residual current device per drive.

Equipment Grounding

⚠⚠ DANGER

ELECTRIC SHOCK CAUSED BY INSUFFICIENT GROUNDING

- Verify compliance with all local and national electrical code requirements as well as all other applicable regulations with respect to grounding of the entire device.
- Ground the device before applying voltage.
- The cross section of the protective ground conductor must comply with the applicable standards.
- Do not use conduits as protective ground conductors; use a protective ground conductor inside the conduit.
- Do not consider cable shields to be protective ground conductors.

Failure to follow these instructions will result in death or serious injury.

Tighten the grounding screws according to the instructions given in the Ground Cables section, page 179.

Connection Instructions

The product has a leakage current greater than 3.5 mA. If the protective ground connection is interrupted, a hazardous touch current may flow if the product is touched.

⚠⚠DANGER

ELECTRIC SHOCK CAUSED BY HIGH LEAKAGE CURRENT

Verify compliance with all local and national electrical code requirements as well as all other applicable regulations with respect to grounding of the entire drive system installation.

Failure to follow these instructions will result in death or serious injury.

The values and products for IEC compliance are specified in the present manual. Refer to Prospective Short-Circuit Current, page 95.

- Ensure that the resistance to Ground is 1 Ohm or less.
- When grounding several drives, you must connect each one directly, as shown in the above figure.
- Do not loop Ground cables or connect them in series.

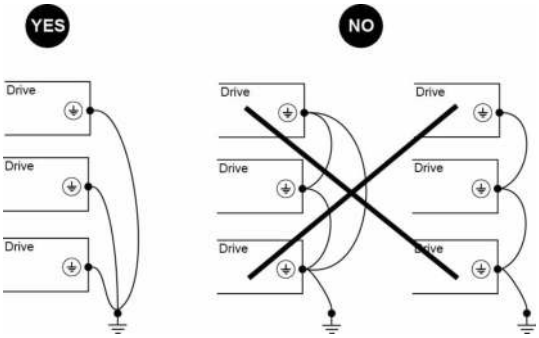

Specific Wiring Instructions For Wall Mounting Drives

Connection Instructions

The product has a leakage current greater than 3.5 mA. If the protective ground connection is interrupted, a hazardous touch current may flow if the product is touched.

⚠⚠DANGER

ELECTRIC SHOCK CAUSED BY HIGH LEAKAGE CURRENT

Verify compliance with all local and national electrical code requirements as well as all other applicable regulations with respect to grounding of the entire drive system installation.

Failure to follow these instructions will result in death or serious injury.

- Ensure that the resistance to Ground is 1 Ohm or less.
- When grounding several drives, you must connect each one directly, as shown in the above figure.
- Do not loop Ground cables or connect them in series.

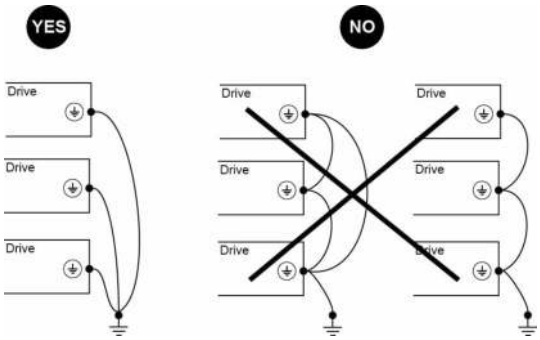

Specific Wiring Instructions For Floor Standing Drives

Protective Grounding

There is a marked terminal (bar) inside the enclosure to connect the protective conductor. Furthermore there is a marked terminal (bar) to connect the protective grounding of the motor.

The product has a leakage current greater than 3.5 mA. If the protective ground connection is interrupted, a hazardous touch current may flow if the product is touched.

⚠⚠DANGER

ELECTRIC SHOCK CAUSED BY HIGH LEAKAGE CURRENT

Verify compliance with all local and national electrical code requirements as well as all other applicable regulations with respect to grounding of the entire drive system installation.

Failure to follow these instructions will result in death or serious injury.

Connection Instructions

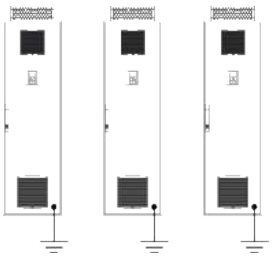

- Check whether the resistance of the protective grounding is 0.1 Ω or less.
- When several inverters need to be connected to the protective ground, each one must be connected directly to this protective ground as illustrated above.

Upstream Protective Device Information

DANGER

INSUFFICIENT PROTECTION AGAINST OVERCURRENTS CAN CAUSE FIRE OR EXPLOSION

- Use properly rated overcurrent protection devices.
- Use the fuses/circuit breakers specified.
- Do not connect the product to a supply mains whose prospective short circuit current rating (current that flows during a short circuit) exceeds the specified maximum permissible value.
- When rating the upstream mains fuses and the cross sections as well as the lengths of the mains cables, take into account the minimum required prospective short-circuit current (Isc). Refer to the Upstream Protection Device section.
- If the minimum required prospective short-circuit current (Isc) is not available, increase the power of the transformer or decrease the length of the cables.

Failure to follow these instructions will result in death or serious injury.

The values and products for IEC compliance are specified in Electrical Data - Upstream Protective Device, page 92.

The values and products for UL/CSA compliance are specified in the ATV900 Getting Started Annex (NHA61578) provided with the product.

NOTE: The Floor standing drives include semiconductor fuses as standard.

Dimensioning of Power Part Cables for Floor Standing Drives

Cable Cross Sections

The recommended values for dimensioning the cable cross sections given in chapter Characteristics of the Power Part Terminals, page 195 are reference values for multi-core copper power cables laid in air at a maximum ambient temperature of 40°C (104°F). Observe different ambient conditions and local regulations.

Types of Supply Mains Cables

Cable Type	Description
	Three-phase cable with sector-shaped conductors and reduced protective conductor. **NOTE:** Verify that the PE conductor complies with the requirements according to IEC 61439-1.
	Three-phase cable with round conductors and reduced protective conductor. **NOTE:** Verify that the PE conductor complies with the requirements according to IEC 61439-1.

Dimensioning of the Motor Cables

⚠⚠DANGER

ELECTRIC SHOCK DUE TO OVERLOAD ON MOTOR CABLES

- Verify that the protective ground conductor complies with the requirements specified in IEC 61439-1.
- Verify compliance of the motor cables with the specification of IEC 60034-25.

Failure to follow these instructions will result in death or serious injury.

The motor cables are dimensioned for the maximum continuous current. They apply to 0...100 Hz (up to 300 Hz the cable losses increase about 25 % because of the Skin-effect).

The IGBT modules cause high-frequent interferences which drain off more and more stronger to the ground potential with increasing motor cable length. As a result the line-conducted interferences to the mains increase. In case of too long motor cables the attenuation of the mains filters is not longer sufficient and the permitted interference limits are exceeded.

Types of Motor Cables

Cable Type	Description
	Symmetrically shielded cable with 3 phase conductors, symmetrically arranged PE conductor and a shield. **NOTE:** Verify that the PE conductor complies with the requirements according to IEC 61439-1. Example: 2YSLCY-JB
	Symmetrically shielded cable with 3 phase conductors and a concentric PE conductor ● ● ● ● as shield. **NOTE:** Verify that the PE conductor complies with the requirements according to IEC 61439-1. Example: NYCY / NYCWY
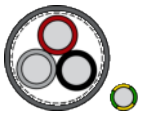	Three-phase cable with round conductors and reduced protective conductor. **NOTE:** A separate PE conductor is required if the shield does not fulfill the requirements according to IEC 61439-1.

Cable Length Instructions

Long Cable Lengths Consequences

When drives are used with motors, a combination of fast switching transistors and long motor cables can even cause peak voltages up to twice the DC link voltage. This high peak voltage can cause premature aging of motor winding insulation which leads to motor breakdown.

The overvoltage limitation function will enable to increase the cable length while decreasing the torque performances.

Length Of Motor Cables

Because of the permitted mains disturbances, the allowed overvoltages at the motor, the occurring bearing currents and the permitted heat losses the distance between inverter and motor(s) is limited.

The maximum distance heavily depends on the used motors (insulation material), the type of motor cable used (shielded / unshielded), the cable laying (cable channel, underground installation...) as well as from the used options.

Dynamic Voltage Load Of The Motor

Overvoltages at the motor terminals result from reflection in the motor cable. Basically the motors are stressed with measurable higher voltage peaks from a motor cable length of 10 m. With the length of the motor cable also the value of overvoltage increases.

The steep edges of the switching impulses at the output side of the frequency inverter lead to a further load of the motors. The slew rate of the voltage is typically over 5 kV/µs but it decreases with the length of the motor cable

Load of the motor with overvoltage and slew rate when using conventional drive

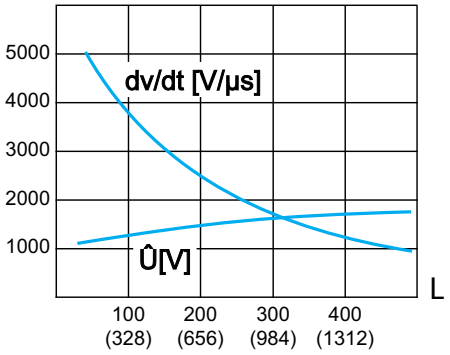

L Length of motor cables in meters (feet)

Corrective Actions Overview

A number of simple measures can be taken to help enhance the motor life time:

- Specification of a motor designed for speed drive applications (IEC60034-25 B or NEMA MG1 Part 31 should be prescribed).
- Specification of drives that integrate voltage reflection superimposition software suppression.

  Refer to **[Volt surge limit. opt]** SoP parameter in the Programming manual.
- Reduce to a minimum the distance between motor and drive.
- Use unshielded cables.
- Reduce the drive switching frequency (a reduction to 2.5 kHz is advisable.)

Preventive Measures Suitable for Wall Mounting Drives According to IEC60034-25

The preventive measures will depend on motor characteristics and cable length.

Motor cable length (unshielded cable)	Motor conforming to IEC60034-25	Motor NOT-conforming to IEC60034-25
1 m (3 ft) < L < 50 m (164 ft)	Filter not required	dV/dt filter
50 m (164 ft) < L < 100 m (328 ft)	Filter not required	Sinus filter
100 m (328 ft) < L < 300 m (984 ft)	Filter not required	Sinus filter
300 m (984 ft) < L < 500 m (1640 ft)	dV/dt filter	Sinus filter
500 m (1640 ft) < L < 1000 m (3281 ft)	Sinus filter	Sinus filter

NOTE: When calculating cable lengths for the purpose of guarding against these overvoltage situations, a shielded cable should count as twice the length of an unshielded cable. For example, if a shielded cable is 100 m (328 ft) in actual length, it should be considered to be equal to a 200 m (656 ft) length standard cable in the calculation.

NOTE: The FS drive is delivered with standard output filters. For motor cable lengths beyond 300 m (984 ft), refer to the ATV960 handbook.

Additional Information

Further detailed technical information is available in the following white paper *An Improved Approach for Connecting VSD and Electric Motors* (998-2095-10-17-13AR0_EN) available on www.se.com.

General Wiring Diagrams

Control Block Wiring Diagram

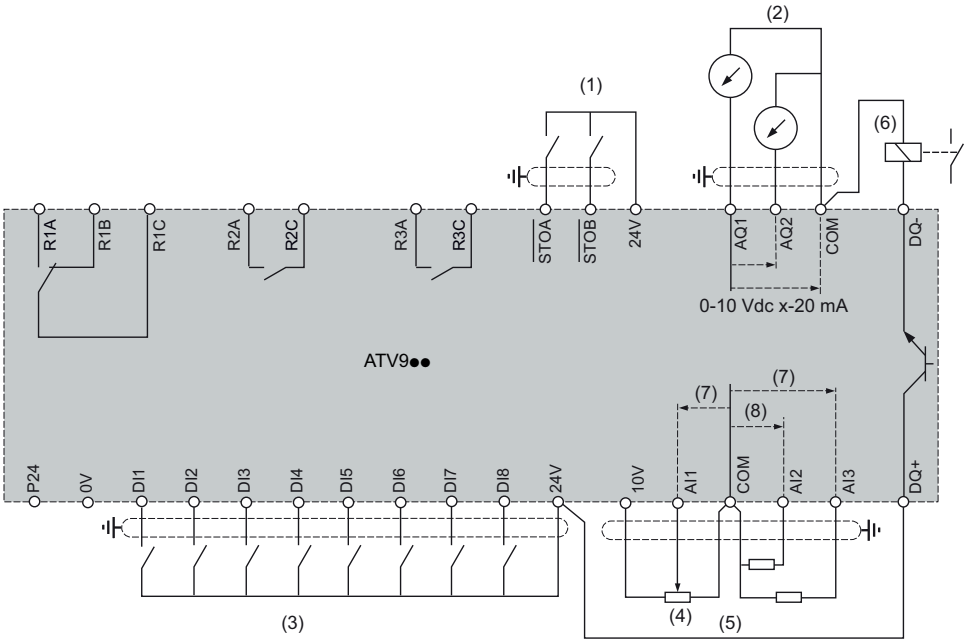

(1) STO Safe Torque Off

(2) Analog Output

(3) Digital Input - Shielding instructions are given in the Electromagnetic Compatibility section, page 221

(4) Reference potentiometer (ex. SZ1RV1002)

(5) Analog Input

(6) Digital output

(7) 0-10 Vdc, x-20 mA

(8) 0-10 Vdc, -10 Vdc...+10 Vdc.

Three-phase Power Supply - Diagram With Line Contactor Without Safety Function STO

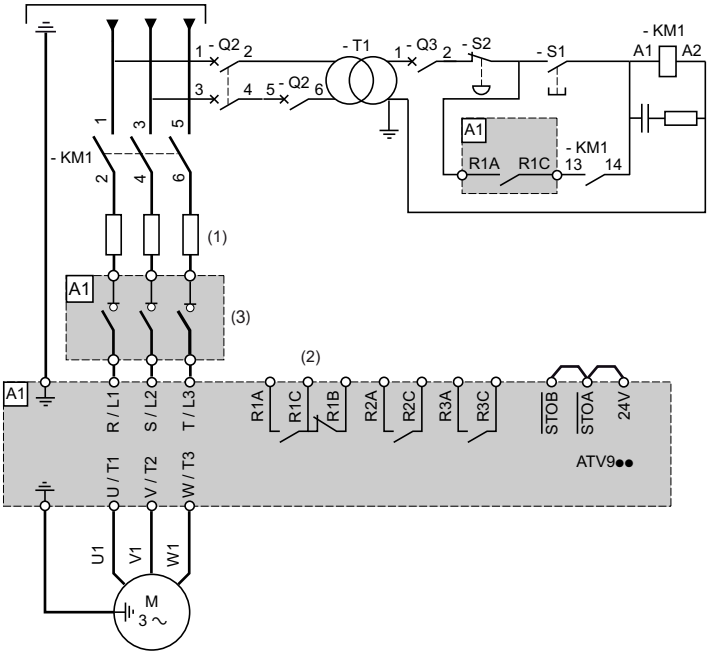

- **(1)** Line choke, if used.
- **(2)** Use relay output R1 set to operating state Fault to switch Off the product once an error is detected.
- **(3)** For the drives ATV950•••N4E equipped with a TeSys Vario - switch disconnector. The connection between the drive and the TeSys Vario - switch disconnector is wired.

NOTE: To select the appropriate voltage surge suppressor refer to Relay Contacts Wiring, page 168.

Three-phase Power Supply - Diagram With Downstream Contactor

If a Run command is executed while the downstream contactor between the drive and the motor is still open, there may be residual voltage at the output of the drive. This can cause an incorrect estimation of the motor speed when the contacts of the downstream contactor are closed. This incorrect estimation of the motor speed can lead to unanticipated equipment operation or to equipment damage.

In addition, there may be overvoltage at the output of the drive if the power stage is still enabled when the downstream contactor between the drive and the motor opens.

⚠ WARNING

UNANTICIPATED EQUIPMENT OPERATION OR EQUIPMENT DAMAGE

If a downstream contactor is used between the drive and the motor, verify the following:

- The contacts between the motor and the drive must be closed before a Run command is executed.
- The power stage must not be enabled when the contacts between the motor and the drive open.

Failure to follow these instructions can result in death, serious injury, or equipment damage.

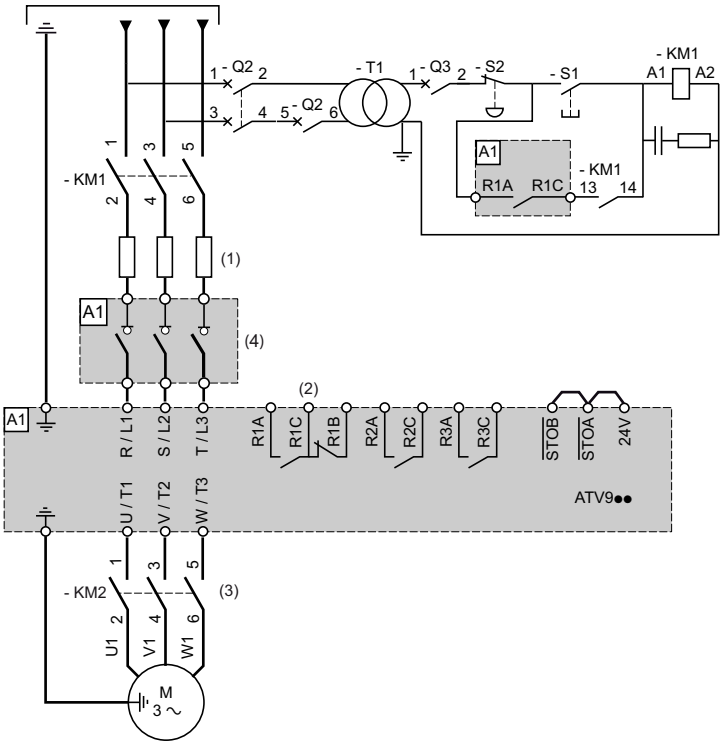

- **(1)** Line choke, if used.
- **(2)** Use relay output R1 set to operating state Fault to switch Off the product once an error is detected.
- **(3)** Command of KM2 can be done by using the **[Output contactor cmd]** OCC function. For more information, refer to the programming manual.
- **(4)** For the drives ATV950•••N4E equipped with a TeSys Vario - switch disconnector. The connection between the drive and the TeSys Vario - switch disconnector is wired.

NOTE: To select the appropriate voltage surge suppressor refer to Relay Contacts Wiring, page 168.

Safety Function STO

All details related to the STO safety function activation are given in the ATV900 Embedded Safety Function Manual NHA80947.

KTY — PT100 — PT1000 Sensor Connection

It is possible to connect 1 thermal sensor on terminals AI1 or AI3.

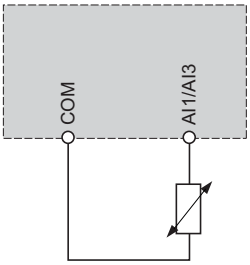

PTC Sensor Connection

It is possible to connect either 1 thermal sensor or 3 thermal sensors or 6 thermal sensors on terminals AI1 or AI3.

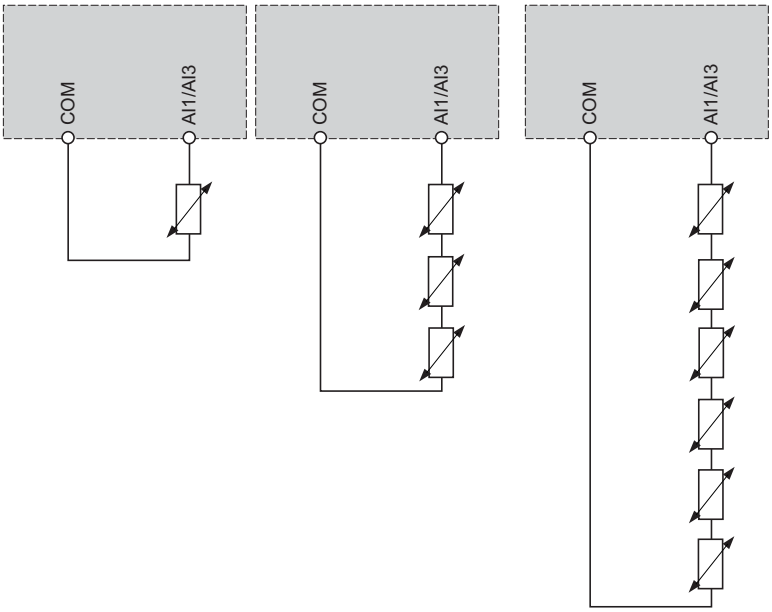

Floor Standing Drive Circuit Diagram

The following diagram shows the typical wiring of the drive.

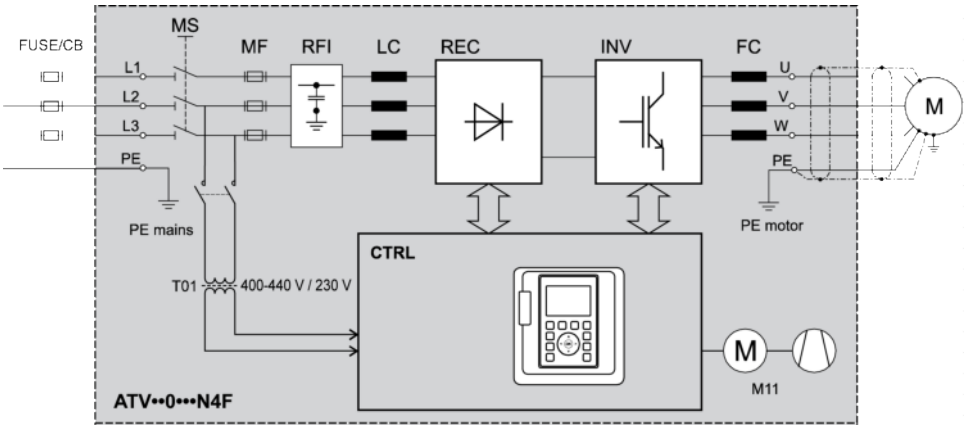

ATV••0•••N4F Altivar Process Floor standing drive

FUSE/CB External pre-fuse or circuit breaker to protect the mains cable

MS Built-in main switch, lockable in open position (only availble on IP54 drives)

T01 Control transformer 400 / 230 V AC

MF aR fuses for short-circuit shut-down if the electronic protective devices do not work properly

RFI Built-in RFI filter, considering category C3 according to EN 61800-3 *Use in industrial environments*

LC Line reactor to reduce the current harmonics on the mains caused by the DC link

REC Rectifier module(s)

INV Inverter module(s)

FC dv/dt filter choke to reduce the voltage load of the motor

CTRL Control panel with control block and further control components

M11 Fan in enclosure door

If the internal circuit breaker is open, the internal fans are not supplied. If the cabinet door is not completely closed, the cooling system does not operate properly. This may result in overtemperature.

NOTICE

OVERHEATING

- Verify that the circuit breaker in the cabinet is closed during operation.
- Verify that the door of the cabinet is closed during operation.

Failure to follow these instructions can result in equipment damage.

NOTE: For a detailed wiring diagram of the Floor standing drive, contact Schneider Electric Services.

Relay Contacts Wiring

What's in This Chapter

Output Relay with Inductive AC Loads 169
Output Relay with Inductive DC loads 170

Output Relay with Inductive AC Loads

General

The AC voltage source must be of overvoltage category II (OVC II) according to IEC 61800-5-1.

If it is not the case, an isolation transformer must be used.

Contactors with AC Coil

If controlled by a relay, a resistor-capacitor (RC) circuit must be connected in parallel to the coil of the contactor as shown on the diagram below:

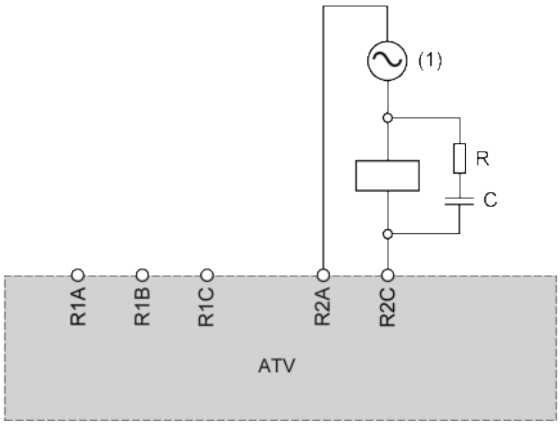

(1) AC 250 Vac maximum.

Schneider Electric AC contactors have a dedicated area on the housing to plug easily the RC device. Refer to the Motor control and protection components catalog MKTED210011EN available on se.com to find the RC device to be associated with the contactor used.

Example: With a 48 Vac source, contactors LC1D09E7 or LC1DT20E7 have to be used with LAD4RCE voltage suppression device.

Other Inductive AC Loads

For other inductive AC loads:

- Use an auxiliary contactor connected on the product to control the load.

  Example: with a 48 Vac source, auxiliary contactors CAD32E7 or CAD50E7 with LAD4RCE voltage suppression device.
- When using a third party inductive AC load, request the supplier to provide information on the voltage suppression device, in order to avoid overvoltage above 375 V during relay opening.

Output Relay with Inductive DC loads

Contactors with DC Coil

If controlled by a relay, a bidirectional transient voltage suppression (TVS) diode, also called transil, must be connected in parallel to the coil of the contactor as shown on the diagram below:

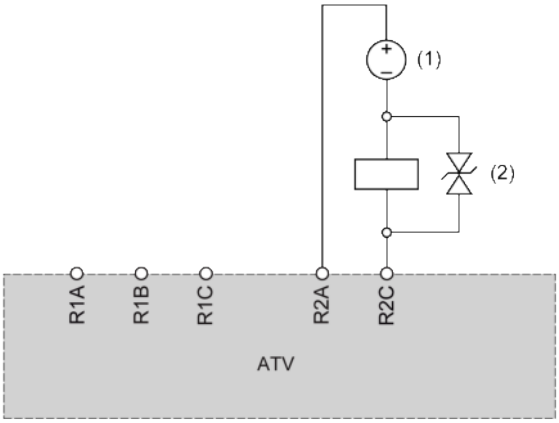

(1) DC 30 Vdc maximum.

(2) TVS diode

Schneider Electric contactors with DC coil include the TVS diode. No additional device is required.

Refer to the Motor control and protection components catalog MKTED210011EN available on se.com for more information.

Other Inductive DC Loads

Other inductive DC loads without embedded TVS diode must use one of the following voltage suppression device:

- A bidirectional TVS device as shown on the diagram above, defined by:
  - TVS break-down voltage greater than 35 Vdc,
  - TVS clamping voltage V(TVS) less than 50 Vdc
  - TVS peak power dissipation greater than load rated current, I(load) x V (TVS).

    Example: with I(load) = 0.9 A and V(TVS) = 50 Vdc, TVS peak power must be greater than 45 W
  - TVS average power dissipation greater than the value calculated by the following 0.5 x I(load) x V(TVS) x load time constant x number of operation per second.

    Example: with I(load) = 0.9 A and V(TVS) = 50 Vdc, load time constant = 40 ms (load inductance divided by load resistance) and 1 operation every 3 s, the TVS average power dissipation must be greater than 0.5 x 0.9 x 50 x 0.04 x 0.33 = 0.3 W.
- A fly-back diode as shown in the diagram below:

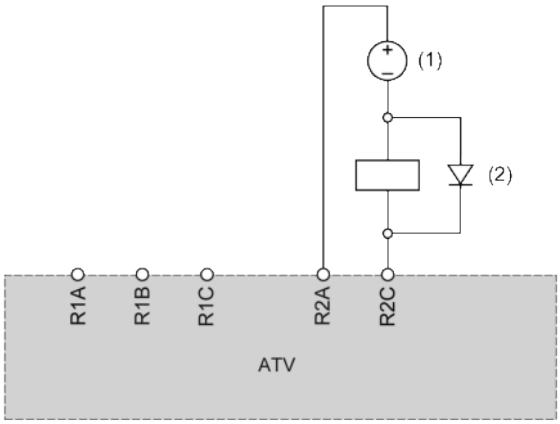

(1) DC 30 Vdc maxi.

(2) Flyback diode

The diode is a polarized device. The fly-back diode must be defined by:

- a reverse voltage greater than 100 Vdc,
- a rated current greater than two times the load rated current,
- a thermal resistance: junction to ambient temperature (in K/W) less than 90 / (1.1 x I(load)) to operate at maximum 60°C (140°F) ambient temperature.

  Example: with I(load) = 1.5 A, select a 100 V, 3 A rated current diode with a thermal resistance from junction to ambient less than 90 / (1.1 x 1.5) = 54.5 K/W.

Using a flyback diode, the relay opening time will be longer than with a TVS diode.

NOTE: Use diodes with leads for easy wiring and keep at least 1 cm (0.39 in.) of leads on each side of the case of the diode for a correct cooling.

Digital Inputs Wiring Depending on Sink / Source Switch Configuration

About the Switch

⚠WARNING

UNANTICIPATED EQUIPMENT OPERATION

- If the device is set to **SK** or **EXT**, do not connect the **0 V** terminal to ground or to protective ground.
- Verify that accidental grounding of digital inputs configured for sink logic, caused, for example, by damage to the signal cables, cannot occur.
- Follow all applicable standards and directives such as NFPA 79 and EN 60204 for proper control circuit grounding practices.

Failure to follow these instructions can result in death, serious injury, or equipment damage.

The switch is used to adapt the operation of the logic inputs to the technology of the programmable controller outputs. To access the switch, follow the Access to control Terminals procedure , page 197.

The switch is located on the right hand side of the control terminals, page 234

- Set the switch to Source (factory setting) if using PLC outputs with PNP transistors.
- Set the switch to Ext if using PLC outputs with NPN transistors.

Wiring With Use of the Output Power Supply for the Digital Inputs

Switch set to **SRC** (Source) position

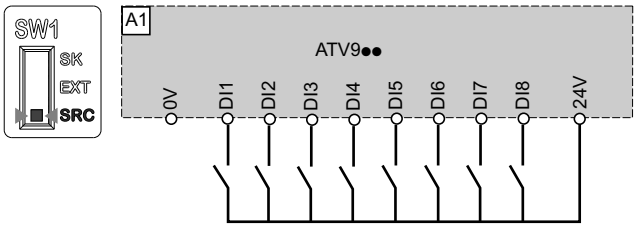

Switch set to **SK** (Sink) position

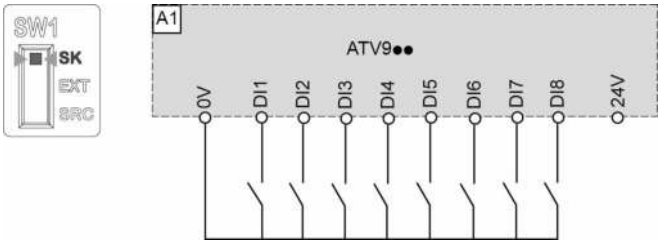

Wiring With Use of an External Power Supply for the Digital Inputs

⚠⚠DANGER

ELECTRIC SHOCK CAUSED BY INCORRECT POWER SUPPLY UNIT

The +24VDC supply voltage is connected with many exposed signal connections in the device.

- Use a power supply unit that meets the PELV (Protective Extra Low Voltage) requirements.

Failure to follow these instructions will result in death or serious injury.

NOTICE

INCORRECT VOLTAGE

Supply the digital inputs with 24 Vdc only.

Failure to follow these instructions can result in equipment damage.

Switch set to **EXT** (Sink External) position **without functional isolation** on digital inputs

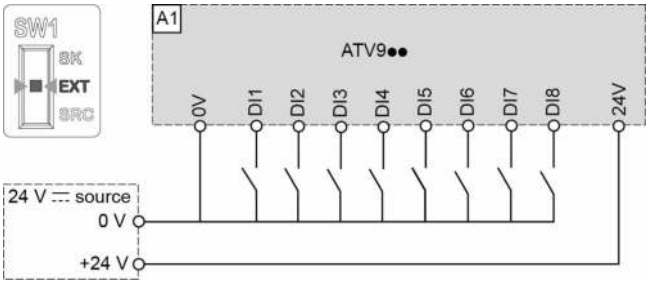

Switch set to **EXT** (Sink External) position **with functional isolation** on digital inputs. This configuration requires the use of 2 external supply units.

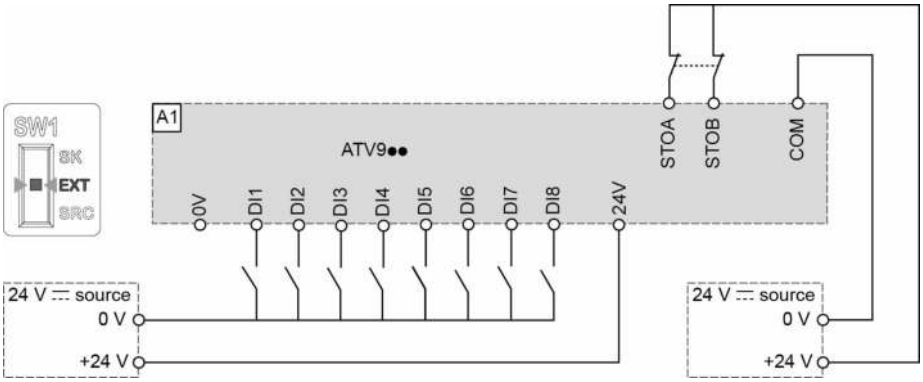

NOTE:

- STO inputs are also connected by default on a 24 Vdc terminal. If the external power supply is switched off, the function STO will be triggered.
- To avoid to trigger the STO function when switching-on the product, the external power supply must be previously switched on.

Switch set to **SRC** (Source) position

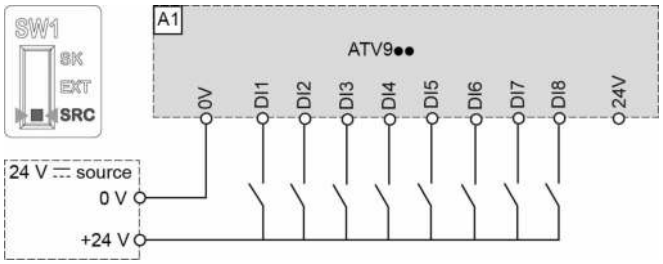

Pulse Train Output / Digital Output Switch Configuration

What's in This Chapter

PTO, Pulse Train Output Configuration 176
DQ, Digital Output Configuration 177

Purpose

⚠ WARNING

UNANTICIPATED EQUIPMENT OPERATION

- If the device is set to **SK** or **EXT**, do not connect the **0 V** terminal to ground or to protective ground.
- Verify that accidental grounding of digital inputs configured for sink logic, caused, for example, by damage to the signal cables, cannot occur.
- Follow all applicable standards and directives such as NFPA 79 and EN 60204 for proper control circuit grounding practices.

Failure to follow these instructions can result in death, serious injury, or equipment damage.

The SW2 (PTO/DQ) switch is used to configure the DQ+ or DQ- digital outputs.

- Set the switch to **PTO (Pulse Train Output)** to configure DQ+ and DQ- outputs as pulse train outputs. This may be used to chain pulse train inputs of another drive, using its DI7 or DI8 pulse inputs.
- Set the switch to **DQ (Digital Output)** to configure DQ+ and DQ- outputs as an assignable logic output.

Access

To access the switch, follow the Access to control Terminals procedure of the ATV900 Installation manual. , page 239. The switch is located on the right hand side of the control terminals, page 234

PTO, Pulse Train Output Configuration

Switches SW1 (A1&A2) Set to SK (Sink mode) Position

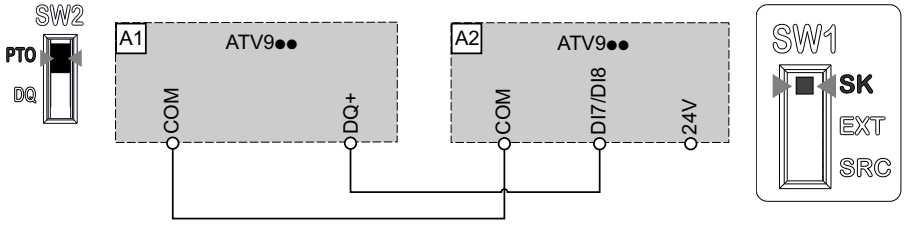

Switches SW1 (A1&A2) Set to EXT (Sink ext mode) Position

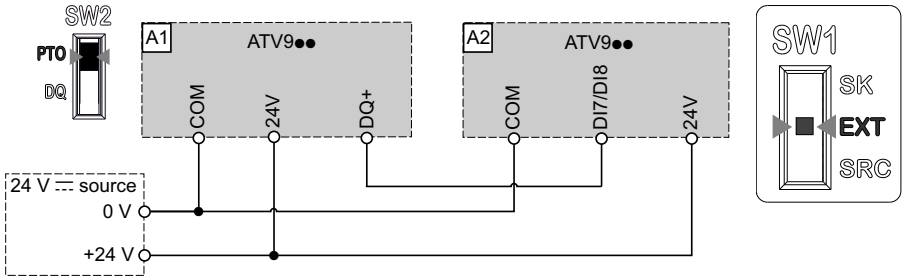

Switches SW1 (A1&A2) Set to SRC (Source mode) Position

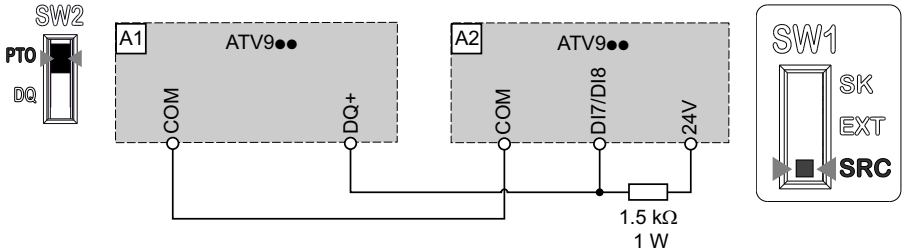

Switches SW1 (A1&A2) Set to SRC (Source ext mode) Position

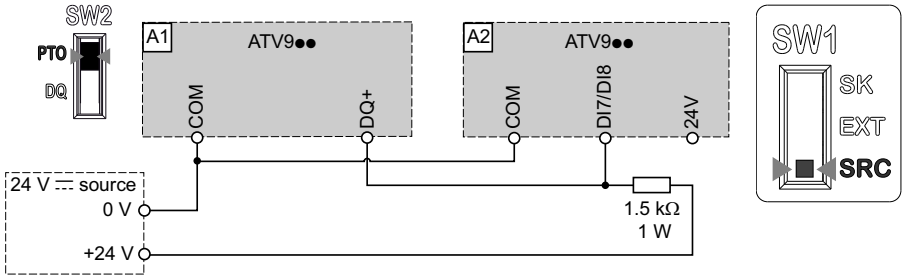

DQ, Digital Output Configuration

Switch SW1 Set to SK (Sink mode) Position

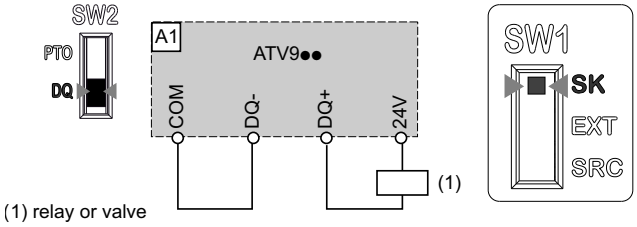

Switch SW1 Set to EXT (Sink ext mode) Position

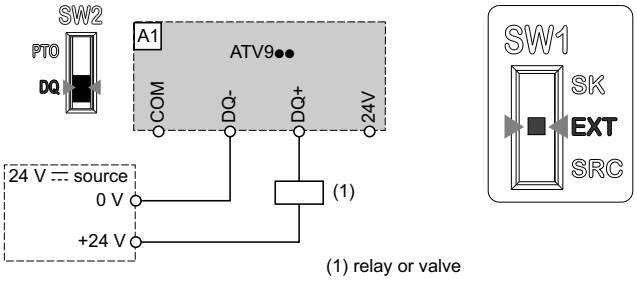

Switch SW1 Set to SRC (Source mode) Position

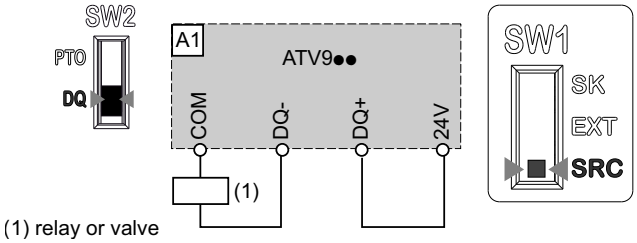

Switch SW1 Set to SRC (Source ext mode) Position

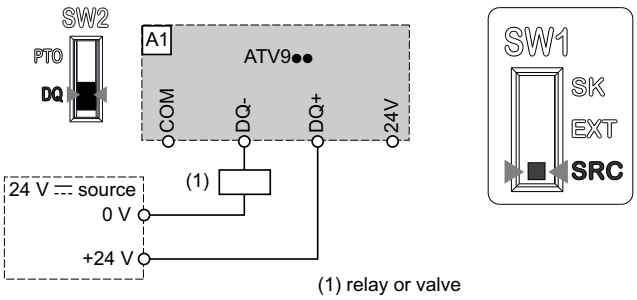

Characteristics of the Power Part Terminals

⚠⚠DANGER

HAZARD OF FIRE OR ELECTRIC SHOCK

- Wire cross sections and tightening torques must comply with the specifications provided in this document.
- If you use flexible multi-wire cables for a connection with a voltage higher than 25 Vac, you must use ring type cable lugs or wire ferrules, depending on the wire gauge and the specified stripping length of the cable.

Failure to follow these instructions will result in death or serious injury.

Impact wrench cannot be used to ensure correct tightening torque and can cause damage to the fastener and/or equipment.

Description of the Power Terminals

Terminal	Function
PE or ⏚	Ground connection terminal
R/L1 S/L2 T/L3	AC supply mains
PA/+	DC bus + polarity (Output to braking resistor)
PB	Output to braking resistor
PC/-	DC bus - polarity
U/T1 V/T2 W/T3	Outputs to the motor

Protective earth ground cables

⚠⚠DANGER

ELECTRIC SHOCK CAUSED BY INSUFFICIENT GROUNDING

- For the protective earth conductor connected to the grounding screw, verify that the minimum cross section is compliant with the next table.
- Verify compliance with all local and national electrical code requirements as well as all other applicable regulations with respect to grounding of the entire drive system.

Failure to follow these instructions will result in death or serious injury.

Cross-sectional area of phase conductors of the product S (mm²) (for copper cables)	Minimum cross-sectional area of the corresponding protective earthing conductor Sp (mm²) (for copper cables)
S ≤ 10	10
10 < S ≤ 16	S
16 < S ≤ 35	16
35 < S	S/2

NOTE: About Cross-sectional area of phase conductors of the product S, refer to Frame Size 1, page 181.

Ground Cables

Ground cable cross sections of supply and output ground cables are the same as those given for the supply and output cables.

Tightening torques according to frame size

- Frame sizes 1...3: 2.5 N·m (22.1 lb.in)
- Frame size 3S: 12 N·m (106.2 lb.in)
- Frame size 3Y:
  - ATV•30U22Y6...U75Y6, ATV•30D11Y6: 3 N·m (26.5 lb.in)
  - ATV•30D15Y6, D18Y6: 5.4 N·m (47.8 lb.in)
  - ATV•30D22Y6, D30Y6: 12 N·m (106.2 lb.in)
- Frame size 4: 5 N·m (44.2 lb.in)
- Frame size 5: 25 N·m (221.3 lb.in)
- Frame sizes 5S and 5Y: 41 N·m (362.89 lb.in)
- Frame size 6:
  - ①: 27 N·m (239 lb.in)
  - ②:13.5 N·m (119.5 lb.in)

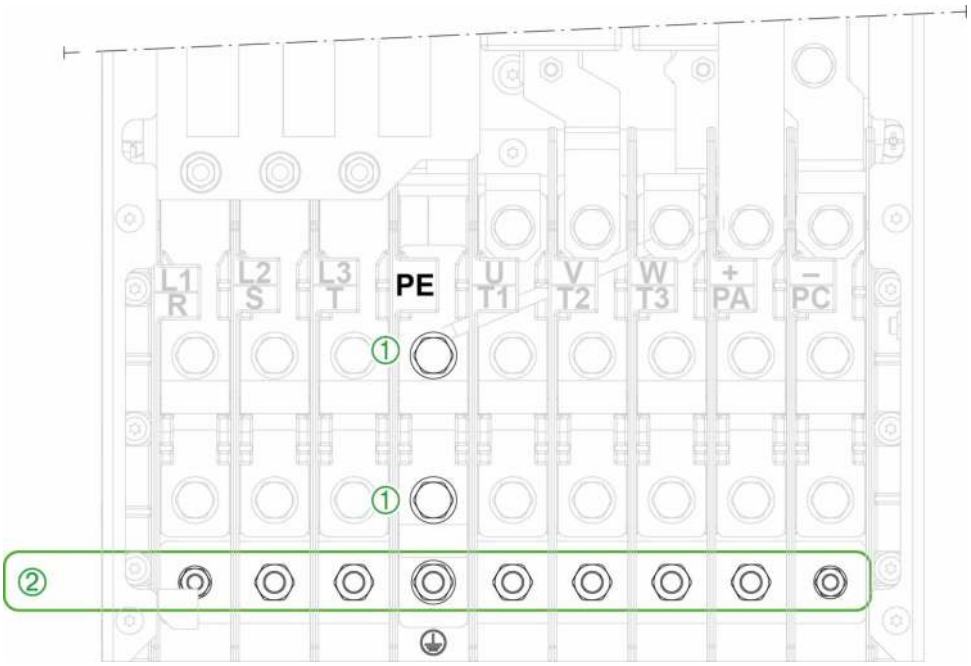

- Frame size 7: 37.5...50.8 N·m (332...449 lb.in)

Braking Unit

VW3A7101:

For more information, refer to the VW3A7101 documentation.

VW3A7105:

For more information, refer to the VW3A7105 documentation.

VW3A7106:

For more information, refer to the VW3A7106 documentation.

Cross Section: Electrical and Mechanical characteristics

⚠⚠DANGER

HAZARD OF FIRE OR ELECTRIC SHOCK

If the product is used below its rated power and you choose to reduce the wire cross section compared to the specified minimum wire cross section given at rated condition, ensure that the selected wire cross section is compliant with the duty cycle and current load of the application.

Failure to follow these instructions will result in death or serious injury.

Frame Size 1

Electrical characteristics (*)

ATV930	Minimum Wire Cross Section at rated condition	
	Supply Terminals (L1, L2, L3) DC Bus Terminals (PA/+, PC/-) (**)	Output Terminals (U, V, W)
	mm² (AWG)	mm² (AWG)
U07••, U15••, U22••, U30N4•, U40N4•	2.5 (14)	2.5 (14)
U55N4•, U30M3	2.5 (14)	4 (12)
U40M3	4 (12)	6 (10)

(*) Minimum wire cross section to be applied when the product is used at rated power.

(**) Wire cross section in case of DC bus voltage supply.

Mechanical characteristics

ATV930	Supply Terminals (L1, L2, L3) Output Terminals (U, V, W) DC Bus Terminals (PA/+, PC/-) (*)			
	Minimum (**)		Maximum	
	Permissible Cross Section (***)	Rated Tightening Torque	Permissible Cross Section	Rated Tightening Torque
	mm² (AWG)	N·m (lbf.in)	mm² (AWG)	N·m (lbf.in)
U07••...U40••, U55N4•	0.5 (20)	1.3 (11.5)	6 (10)	1.3 (11.5)

(*) Wire cross section in case of DC bus voltage supply.

(**) The mechanical characteristics concern power terminal only and do not take into account the cabling equipment (cable clamp, cable gland,...) that are designed for the rated conditions.

(***) Minimum permissible cross sections are provided, if the product is used below its rated power. In this case, ensure that the wire cross section is compliant with the duty cycle and current load.

NOTE: Only use cables with solid wires or rigid stranded wires.

Frame Size 2

Electrical characteristics (*)

ATV930	Minimum Wire Cross Section at rated condition	
	Supply Terminals (L1, L2, L3) DC Bus Terminals (PA/+, PC/-) (**)	Output Terminals (U, V, W)
	mm² (AWG)	mm² (AWG)
U22S6X...D15S6X D11N4•	6 (10)	6 (10)
U75N4•	4 (12)	6 (10)
U55M3	6 (10)	10 (8)
(*) Minimum wire cross section to be applied when the product is used at rated power. (**) Wire cross section in case of DC bus voltage supply.		

Mechanical characteristics

ATV930	Supply Terminals (L1, L2, L3) DC Bus Terminals (PA/+, PC/-) (*)				Output Terminals (U, V, W)			
	Minimum (**)		Maximum		Minimum (**)		Maximum	
	Permissible Cross Section (***)	Rated Tightening Torque	Permissible Cross Section	Rated Tightening Torque	Permissible Cross Section (***)	Rated Tightening Torque	Permissible Cross Section	Rated Tightening Torque
	mm² (AWG)	N·m (lbf.in)	mm² (AWG)	N·m (lbf.in)	mm² (AWG)	N·m (lbf.in)	mm² (AWG)	N·m (lbf.in)
U22S6X... D15S6X U75N4•, D11N4• U55M3	0.5 (20)	1.8 (15.6)	6 (10)	1.8 (15.6)	0.5 (20)	1.8 (15.6)	10 (8)	1.8 (15.6)
(*) Wire cross section in case of DC bus voltage supply. (**) The mechanical characteristics concern power terminal only and do not take into account the cabling equipment (cable clamp, cable gland,...) that are designed for the rated conditions. (**) Minimum permissible cross sections are provided, if the product is used below its rated power. In this case, ensure that the wire cross section is compliant with the duty cycle and current load.								

NOTE: Only use cables with solid wires or rigid stranded wires.

Frame Size 3

Electrical characteristics (*)

ATV930	Minimum Wire Cross Section at rated condition	
	Supply Terminals (L1, L2, L3) DC Bus Terminals (PA/+, PC/-) (**)	Output Terminals (U, V, W)
	mm² (AWG)	mm² (AWG)
D15N4•, D18N4•, U75M3	10 (8)	10 (8)
D22N4•, D11M3	10 (8)	16 (6)
(*) Minimum wire cross section to be applied when the product is used at rated power. (**) Wire cross section in case of DC bus voltage supply.		

Mechanical characteristics

ATV930	Supply Terminals (L1, L2, L3) Output Terminals (U, V, W) DC Bus Terminals (PA/+, PC/-) (*)			
	Minimum (**)		Maximum	
	Permissible Cross Section (***)	Rated Tightening Torque	Permissible Cross Section	Rated Tightening Torque
	mm² (AWG)	N·m (lbf.in)	mm² (AWG)	N·m (lbf.in)
D15N4•, D18N4•, D22N4• U75M3, D11M3	0.5 (20)	3.5 (30.4)	16 (6)	3.5 (30.4)

(*) Wire cross section in case of DC bus voltage supply.

(**) The mechanical characteristics concern power terminal only and do not take into account the cabling equipment (cable clamp, cable gland,...) that are designed for the rated conditions.

(***) Minimum permissible cross sections are provided, if the product is used below its rated power. In this case, ensure that the wire cross section is compliant with the duty cycle and current load.

NOTE: Only use cables with solid wires or rigid stranded wires.

Frame Size 3S

Electrical characteristics (*)

ATV930	Minimum Wire Cross Section at rated condition
	Supply Terminals (L1, L2, L3) Output Terminals (U, V, W) DC Bus Terminals (PA/+, PC/-) (**)
	mm² (AWG)
D18S6, D22S6	10 (8)

(*) Minimum wire cross section to be applied when the product is used at rated power.

(**) Wire cross section in case of DC bus voltage supply.

Mechanical characteristics

ATV930	Supply Terminals (L1, L2, L3) Output Terminals (U, V, W) DC Bus Terminals (PA/+, PC/-) (*)					
	Minimum (**)		Intermediate		Maximum	
	Permissible Cross Section (***)	Rated Tightening Torque	Permissible Cross Section (***)	Rated Tightening Torque	Permissible Cross Section	Rated Tightening Torque
	mm² (AWG)	N·m (lbf.in)	mm² (AWG)	N·m (lbf.in)	mm² (AWG)	N·m (lbf.in)
D18S6, D22S6	1.5 (16)	1.4 (12.4)	2.5 (14)	3 (26.5)	10 (8)	12 (106.2)
			4 (12)	3 (26.5)		
			6 (10)	5.4 (47.7)		

(*) Wire cross section in case of DC bus voltage supply.

(**) The mechanical characteristics concern power terminal only and do not take into account the cabling equipment (cable clamp, cable gland,...) that are designed for the rated conditions.

(***) Minimum and intermediate permissible cross section are provided, if the product is used below its rated power. In this case, ensure that the wire cross section is compliant with the duty cycle and current load.

NOTE: Only use cables with solid wires or rigid stranded wires.

Frame Size 3Y

Electrical characteristics (*)

ATV930	Minimum Wire Cross Section at rated condition Supply Terminals (L1, L2, L3) Output Terminals (U, V, W) DC Bus Terminals (PA/+, PC/-) (**)
	mm² (AWG)
U22Y6...D11Y6	4 (12)
D15Y6, D18Y6	6 (10)
D22Y6, D30Y6	10 (8)

(*) Minimum wire cross section to be applied when the product is used at rated power.

(**) Wire cross section in case of DC bus voltage supply.

Mechanical characteristics

ATV930	Supply Terminals (L1, L2, L3) Output Terminals (U, V, W) DC Bus Terminals (PA/+, PC/-) (*)					
	Minimum (**)		Intermediate		Maximum	
	Permissible Cross Section (***)	Rated Tightening Torque	Permissible Cross Section (***)	Rated Tightening Torque	Permissible Cross Section	Rated Tightening Torque
	mm² (AWG)	N·m (lbf.in)	mm² (AWG)	N·m (lbf.in)	mm² (AWG)	N·m (lbf.in)
U22Y6...D30Y6	1.5 (16)	1.4 (12.4)	2.5 (14)	3 (26.5)	10 (8)	12 (106.2)
			4 (12)	3 (26.5)		
			6 (10)	5.4 (47.7)		

(*) Wire cross section in case of DC bus voltage supply.

(**) The mechanical characteristics concern power terminal only and do not take into account the cabling equipment (cable clamp, cable gland,...) that are designed for the rated conditions.

(***) Minimum and intermediate permissible cross section are provided, if the product is used below its rated power. In this case, ensure that the wire cross section is compliant with the duty cycle and current load.

NOTE: Only use cables with solid wires or rigid stranded wires.

Frame Size 4

Electrical characteristics (*)

ATV930	Minimum Wire Cross Section at rated condition		
	Supply Terminals (L1, L2, L3)	Output Terminals (U, V, W)	DC Bus Terminals (PA/+, PC/-) (**)
	mm² (AWG)	mm² (AWG)	mm² (AWG)
D30N4•, D15M3	25 (4)	25 (4)	25 (4)
D37N4•, D18M3	35 (3)	35 (3)	25 (4)
D45N4•, D22M3	35 (2)	50 (1)	35 (3)

(*) Minimum wire cross section to be applied when the product is used at rated power.

(**) Wire cross section in case of DC bus voltage supply.

Mechanical characteristics

ATV930	Supply Terminals (L1, L2, L3) Output Terminals (U, V, W) DC Bus Terminals (PA/+, PC/-) (*)			
	Minimum (**)		Maximum	
	Permissible Cross Section (***)	Rated Tightening Torque	Permissible Cross Section	Rated Tightening Torque
	mm² (AWG)	N·m (lbf.in)	mm² (AWG)	N·m (lbf.in)
D30N4•, D37N4•, D45N4• D15M3, D18M3, D22M3	16 (6)	12 (106.2)	50 (1)	12 (106.2)

(*) Wire cross section in case of DC bus voltage supply.

(**) The mechanical characteristics concern power terminal only and do not take into account the cabling equipment (cable clamp, cable gland,...) that are designed for the rated conditions.

(***) Minimum permissible cross sections are provided, if the product is used below its rated power. In this case, ensure that the wire cross section is compliant with the duty cycle and current load.

NOTE: Only use cables with solid wires or rigid stranded wires.

Frame Size 5

Electrical characteristics (*)

ATV930	Minimum Wire Cross Section at rated condition		
	Supply Terminals (L1, L2, L3)	Output Terminals (U, V, W)	DC Bus Terminals (PA/+, PC/-) (**)
	mm² (AWG)	mm² (AWG)	mm² (AWG)
D55N4•	70 (1/0)	70 (1/0)	70 (1/0)
D30M3•	70 (1/0)	70 (2/0)	70 (1/0)
D75N4•	95 (3/0)	95 (3/0)	70 (1/0)
D37M3•	70 (2/0)	95 (3/0)	70 (2/0)
D90N4•	120 (4/0)	120 (250MCM)	95 (3/0)
D45M3•	120 (4/0)	120 (250MCM)	120 (4/0)

(*) Minimum wire cross section to be applied when the product is used at rated power.

(**) Wire cross section in case of DC bus voltage supply.

Mechanical characteristics

ATV930	Supply Terminals (L1, L2, L3) Output Terminals (U, V, W) DC Bus Terminals (PA/+, PC/-) (*)			
	Minimum (**)		Maximum	
	Permissible Cross Section (***)	Rated Tightening Torque	Permissible Cross Section	Rated Tightening Torque
	mm² (AWG)	N·m (lbf.in)	mm² (AWG)	N·m (lbf.in)
D55N4•, D75N4•, D90N4• D30M3, D37M3, D45M3	16 (4)	25 (221.3)	120 (250MCM)	25 (221.3)

(*) Wire cross section in case of DC bus voltage supply.

(**) The mechanical characteristics concern power terminal only and do not take into account the cabling equipment (cable clamp, cable gland,...) that are designed for the rated conditions.

(***) Minimum permissible cross sections are provided, if the product is used below its rated power. In this case, ensure that the wire cross section is compliant with the duty cycle and current load.

NOTE: Only use cables with solid wires or rigid stranded wires.

Frame Size 5S

Electrical characteristics (*)

ATV930	Minimum Wire Cross Section at rated condition	
	Supply Terminals (L1, L2, L3) Output Terminals (U, V, W)	DC Bus Terminals (PA/+, PC/-) (**)
	mm² (AWG)	mm² (AWG)
D30S6	25 (4)	16 (6)
D37S6, D45S6	25 (4)	25 (4)
D55S6	35 (2)	35 (2)
D75S6	50 (1/0)	50 (1/0)

(*) Minimum wire cross section to be applied when the product is used at rated power.

(**) Wire cross section in case of DC bus voltage supply.

Mechanical characteristics

ATV930	Supply Terminals (L1, L2, L3)				Output Terminals (U, V, W) DC Bus Terminals (PA/+, PC/-) (*)			
	Minimum (**)		Maximum		Minimum (**)		Maximum	
	Permissible Cross Section (***)	Rated Tightening Torque	Permissible Cross Section	Rated Tightening Torque	Permissible Cross Section (***)	Rated Tightening Torque	Permissible Cross Section	Rated Tightening Torque
	mm² (AWG)	N·m (lbf.in)	mm² (AWG)	N·m (lbf.in)	mm² (AWG)	N·m (lbf.in)	mm² (AWG)	N·m (lbf.in)
D30S6... D75S6	16 (6)	8 (70.8)	50 (1/0)	8 (70.8)	16 (6)	41 (360)	50 (1/0)	41 (360)

(*) Wire cross section in case of DC bus voltage supply.

(**) The mechanical characteristics concern power terminal only and do not take into account the cabling equipment (cable clamp, cable gland,...) that are designed for the rated conditions.

(***) Minimum permissible cross sections are provided, if the product is used below its rated power. In this case, ensure that the wire cross section is compliant with the duty cycle and current load.

NOTE: Only use cables with solid wires or rigid stranded wires.

Frame Size 5Y

Electrical characteristics (*)

ATV930	Minimum Wire Cross Section at rated condition	
	Supply Terminals (L1, L2, L3) Output Terminals (U, V, W)	DC Bus Terminals (PA/+, PC/-) (**)
	mm² (AWG)	mm² (AWG)
D37Y6	25 (4)	16 (6)
D45Y6, D55Y6	25 (4)	25 (4)
D75Y6	35 (2)	35 (2)
D90Y6	50 (1/0)	50 (1/0)

(*) Minimum wire cross section to be applied when the product is used at rated power.

(**) Wire cross section in case of DC bus voltage supply.

Mechanical characteristics

ATV930	Supply Terminals (L1, L2, L3)				Output Terminals (U, V, W) DC Bus Terminals (PA/+, PC/-) (*)			
	Minimum (**)		Maximum		Minimum (**)		Maximum	
	Permissible Cross Section (***)	Rated Tightening Torque	Permissible Cross Section	Rated Tightening Torque	Permissible Cross Section (***)	Rated Tightening Torque	Permissible Cross Section	Rated Tightening Torque
	mm² (AWG)	N·m (lbf.in)	mm² (AWG)	N·m (lbf.in)	mm² (AWG)	N·m (lbf.in)	mm² (AWG)	N·m (lbf.in)
D37Y6... D90Y6	16 (6)	8 (70.8)	50 (1/0)	8 (70.8)	16 (6)	41 (360)	50 (1/0)	41 (360)

(*) Wire cross section in case of DC bus voltage supply.

(**) The mechanical characteristics concern power terminal only and do not take into account the cabling equipment (cable clamp, cable gland,...) that are designed for the rated conditions.

(***) Minimum permissible cross sections are provided, if the product is used below its rated power. In this case, ensure that the wire cross section is compliant with the duty cycle and current load.

NOTE: Only use cables with solid wires or rigid stranded wires.

Frame Size 6

NOTE:

- If used with ring tongue: selection criteria are compatible with screw M10, width 24 mm (0.94 in.), following DIN 46234.
- If used with lugs: selection criteria are compatible with standard cable lug according to DIN 46234. You may also use lug kit DZ2FH6 available on se.com

Electrical characteristics (*)

ATV930	Minimum Wire Cross Section at rated condition
	Supply Terminals (L1, L2, L3) Output Terminals (U, V, W) DC Bus Terminals (PA/+, PC/-) (**)
	mm² (AWG)
C11N4•	2 x 50 (2 x 1/0)
C13N4•, D55M3C	2 x 70 (2 x 2/0)
C16N4•, D75M3C	2 x 95 (2 x 3/0)

(*) Minimum wire cross section to be applied when the product is used at rated power.

(**) Wire cross section in case of DC bus voltage supply.

Mechanical characteristics (*)

ATV930	Rated Tightening Torque (with Screw size M10)
	Supply Terminals (L1, L2, L3) Output Terminals (U, V, W) DC Bus Terminals (PA/+, PC/-) (*)
	N·m (lbf.in)
C11N4•, C13N4•, C16N4•, D55M3C, D75M3C	27 (239)
(*) Wire cross section in case of DC bus voltage supply.	

NOTE: Only use cables with solid wires or rigid stranded wires.

Frame Size 7A and 7B

Electrical characteristics (*)

ATV930	Minimum Wire Cross Section at rated condition
	Supply Terminals (L1, L2, L3) Output Terminals (U, V, W) DC Bus Terminals (PA/+, PC/-) (**)
	mm² (AWG)
C22N4•	2 x 150 (2 x 350MCM)
C25N4C, C31N4C	4 x 185 (3 x 350MCM)
(*) Minimum wire cross section to be applied when the product is used at rated power. **(**)** Wire cross section in case of DC bus voltage supply.	

Mechanical characteristics

ATV930	Rated Tightening Torque (with Screw size M10)
	Supply Terminals (L1, L2, L3) Output Terminals (U, V, W) DC Bus Terminals (PA/+, PC/-) (*)
	N·m (lbf.in)
C22N4•, C25N4C, C31N4C	41 (360)
(*) Wire cross section in case of DC bus voltage supply.	

Frame Size A

Electrical characteristics (*)

ATV950	Minimum Wire Cross Section at rated condition		
	Supply Terminals (L1, L2, L3)	DC Bus Terminals (**) (PA/+, PC/-)	Output Terminals (U, V, W)
	mm² (AWG)	mm² (AWG)	mm² (AWG)
U07N4•...U55N4•	4 (12)	2.5 (14)	4 (12)
U75N4•	4 (12)	4 (12)	6 (10)
D11N4•	6 (10)	6 (10)	6 (10)
D15N4•, D18N4•	10 (8)	10 (8)	10 (8)
D22N4•	10 (8)	10 (8)	16 (6)

(*) Minimum wire cross section to be applied when the product is used at rated power.

(**) Wire cross section in case of DC bus voltage supply.

Mechanical characteristics Supply Terminals (L1, L2, L3)

ATV950	Minimum (*)		Maximum	
	Permissible Cross Section (**)	Rated Tightening Torque	Permissible Cross Section	Rated Tightening Torque
	mm² (AWG)	N·m (lbf.in)	mm² (AWG)	N·m (lbf.in)
U07N4...U55N4	0.5 (20)	1.3 (11.5)	6 (10)	1.3 (11.5)
U75N4, D11N4	0.5 (20)	1.8 (15.6)	6 (10)	1.8 (15.6)
D15N4, D18N4, D22N4	0.5 (20)	3.5 (30.4)	16 (6)	3.5 (30.4)
U07N4E...U55N4E	2.5 (14)	2.1 (18.3)	10 (8)	2.1 (18.3)
U75N4E, D11N4E	2.5 (14)	2.1 (18.3)	10 (8)	2.1 (18.3)
D15N4E, D18N4E, D22N4E	4 (10)	4 (35)	25 (2)	5.6 (50)

(*) The mechanical characteristics concern power terminal only and do not take into account the cabling equipment (cable clamp, cable gland,...) that are designed for the rated conditions.

(**) Minimum permissible cross sections are provided, if the product is used below its rated power. In this case, ensure that the wire cross section is compliant with the duty cycle and current load.

NOTE: Only use cables with solid wires or rigid stranded wires.

Mechanical characteristics DC Bus Terminals (PA/+, PC/-) (*)

ATV950	Minimum (**)		Maximum	
	Permissible Cross Section (***)	Rated Tightening Torque	Permissible Cross Section	Rated Tightening Torque
	mm² (AWG)	N·m (lbf.in)	mm² (AWG)	N·m (lbf.in)
U07N4•...U55N4•	0.5 (20)	1.3 (11.5)	6 (10)	1.3 (11.5)
U75N4•, D11N4•	0.5 (20)	1.8 (15.6)	6 (10)	1.8 (15.6)
D15N4•...D22N4•	0.5 (20)	3.5 (30.4)	16 (6)	3.5 (30.4)

(*) Wire cross section in case of DC bus voltage supply.

(**) The mechanical characteristics concern power terminal only and do not take into account the cabling equipment (cable clamp, cable gland,...) that are designed for the rated conditions.

(***) Minimum permissible cross sections are provided, if the product is used below its rated power. In this case, ensure that the wire cross section is compliant with the duty cycle and current load.

NOTE: Only use cables with solid wires or rigid stranded wires.

Mechanical characteristics Output Terminals (U, V, W)

ATV950	Minimum (*)		Maximum	
	Permissible Cross Section (**)	Rated Tightening Torque	Permissible Cross Section	Rated Tightening Torque
	mm² (AWG)	N·m (lbf.in)	mm² (AWG)	N·m (lbf.in)
U07N4...U55N4	0.5 (20)	1.3 (11.5)	6 (10)	1.3 (11.5)
U75N4, D11N4	0.5 (20)	1.8 (15.6)	10 (8)	1.8 (15.6)
D15N4, D18N4, D22N4	0.5 (20)	3.5 (30.4)	16 (6)	3.5 (30.4)
U07N4E...U55N4E	0.5 (20)	1.8 (15.6)	6 (10)	1.3 (11.5)
U75N4E, D11N4E	0.5 (20)	1.8 (15.6)	10 (8)	4.5 (40)
D15N4E, D18N4E, D22N4E	0.5 (20)	3.5 (30.4)	16 (6)	3.5 (30.4)

(*) The mechanical characteristics concern power terminal only and do not take into account the cabling equipment (cable clamp, cable gland,...) that are designed for the rated conditions.

(**) Minimum permissible cross sections are provided, if the product is used below its rated power. In this case, ensure that the wire cross section is compliant with the duty cycle and current load.

NOTE: Only use cables with solid wires or rigid stranded wires.

Frame Size B

Electrical characteristics (*)

ATV950	Minimum Wire Cross Section at rated condition	
	Supply Terminals (L1, L2, L3) DC Bus Terminals (PA/+, PC/-) (**)	Output Terminals (U, V, W)
	mm² (AWG)	mm² (AWG)
D30N4•	25 (4)	25 (4)
D37N4•	25 (4)	35 (3)
D45N4•	35 (3)	35 (2)

(*) Minimum wire cross section to be applied when the product is used at rated power.

(**) Wire cross section in case of DC bus voltage supply.

Mechanical characteristics Supply Terminals (L1, L2, L3)

ATV950	Minimum (*)		Maximum	
	Permissible Cross Section (**)	Rated Tightening Torque	Permissible Cross Section	Rated Tightening Torque
	mm² (AWG)	N·m (lbf.in)	mm² (AWG)	N·m (lbf.in)
D30N4, D37N4, D45N4	16 (6)	12 (106.2)	50 (1)	12 (106.2)
D30N4E, D37N4E, D45N4E	10 (8)	22.6 (200)	95 (2)	22.6 (200)

(*) The mechanical characteristics concern power terminal only and do not take into account the cabling equipment (cable clamp, cable gland,...) that are designed for the rated conditions.

(**) Minimum permissible cross sections are provided, if the product is used below its rated power. In this case, ensure that the wire cross section is compliant with the duty cycle and current load.

NOTE: Only use cables with solid wires or rigid stranded wires.

Mechanical characteristics DC Bus Terminals (PA/+, PC/-) (*)

ATV950	Minimum (**)		Maximum	
	Permissible Cross Section (***)	Rated Tightening Torque	Permissible Cross Section	Rated Tightening Torque
	mm² (AWG)	N·m (lbf.in)	mm² (AWG)	N·m (lbf.in)
D30N4•, D37N4•, D45N4•	16 (6)	12 (106.2)	50 (1)	12 (106.2)

(*) Wire cross section in case of DC bus voltage supply.

(**) The mechanical characteristics concern power terminal only and do not take into account the cabling equipment (cable clamp, cable gland,...) that are designed for the rated conditions.

(***) Minimum permissible cross sections are provided, if the product is used below its rated power. In this case, ensure that the wire cross section is compliant with the duty cycle and current load.

NOTE: Only use cables with solid wires or rigid stranded wires.

Mechanical characteristics Output Terminals (U, V, W)

ATV950	Minimum (*)		Maximum	
	Permissible Cross Section (**)	Rated Tightening Torque	Permissible Cross Section	Rated Tightening Torque
	mm² (AWG)	N·m (lbf.in)	mm² (AWG)	N·m (lbf.in)
D30N4•, D37N4•, D45N4•	16 (6)	12 (106.2)	50 (1)	12 (106.2)

(*) The mechanical characteristics concern power terminal only and do not take into account the cabling equipment (cable clamp, cable gland,...) that are designed for the rated conditions.

(**) Minimum permissible cross sections are provided, if the product is used below its rated power. In this case, ensure that the wire cross section is compliant with the duty cycle and current load.

NOTE: Only use cables with solid wires or rigid stranded wires.

Frame Size C

Electrical characteristics (*)

ATV950	Minimum Wire Cross Section at rated condition		
	Supply Terminals (L1, L2, L3)	DC Bus Terminals (**) (PA/+, PC/-)	Output Terminals (U, V, W)
	mm² (AWG)	mm² (AWG)	mm² (AWG)
D55N4	50 (1)	50 (1)	70 (1/0)
D75N4	70 (2/0)	70 (1/0)	95 (3/0)
D90N4	95 (3/0)	95 (3/0)	120 (4/0)
D55N4E	70	50 (1)	70
D75N4E	95	70 (1/0)	95
D90N4E	95	95 (3/0)	120

(*) Minimum wire cross section to be applied when the product is used at rated power.

(**) Wire cross section in case of DC bus voltage supply.

Mechanical characteristics Supply Terminals (L1, L2, L3)

ATV950	Minimum (*)		Maximum	
	Permissible Cross Section (**)	Rated Tightening Torque	Permissible Cross Section	Rated Tightening Torque
	mm² (AWG)	N·m (lbf.in)	mm² (AWG)	N·m (lbf.in)
D55N4, D75N4, D90N4	16 (4)	25 (221.3)	120 (250MCM)	25 (221.3)
D55N4E, D75N4E, D90N4E	10 (8)	22.6 (200)	95 (2)	22.6 (200)

(*) The mechanical characteristics concern power terminal only and do not take into account the cabling equipment (cable clamp, cable gland,...) that are designed for the rated conditions.

(**) Minimum permissible cross sections are provided, if the product is used below its rated power. In this case, ensure that the wire cross section is compliant with the duty cycle and current load.

NOTE: Only use cables with solid wires or rigid stranded wires.

Mechanical characteristics DC Bus Terminals (PA/+, PC/-) (*)

ATV950	Minimum (**)		Maximum	
	Permissible Cross Section (***)	Rated Tightening Torque	Permissible Cross Section	Rated Tightening Torque
	mm² (AWG)	N·m (lbf.in)	mm² (AWG)	N·m (lbf.in)
D55N4•, D75N4•, D90N4•	16 (4)	25 (221.3)	120 (250MCM)	25 (221.3)

(*) Wire cross section in case of DC bus voltage supply.

(**) The mechanical characteristics concern power terminal only and do not take into account the cabling equipment (cable clamp, cable gland,...) that are designed for the rated conditions.

(***) Minimum permissible cross sections are provided, if the product is used below its rated power. In this case, ensure that the wire cross section is compliant with the duty cycle and current load.

NOTE: Only use cables with solid wires or rigid stranded wires.

Mechanical characteristics Output Terminals (U, V, W)

ATV950	Minimum (*)		Maximum	
	Permissible Cross Section (**)	Rated Tightening Torque	Permissible Cross Section	Rated Tightening Torque
	mm² (AWG)	N·m (lbf.in)	mm² (AWG)	N·m (lbf.in)
D55N4•, D75N4•, D90N4•	16 (4)	25 (221.3)	120 (250MCM)	25 (221.3)
(*) The mechanical characteristics concern power terminal only and do not take into account the cabling equipment (cable clamp, cable gland,...) that are designed for the rated conditions. **(**)** Minimum permissible cross sections are provided, if the product is used below its rated power. In this case, ensure that the wire cross section is compliant with the duty cycle and current load.				

NOTE: Only use cables with solid wires or rigid stranded wires.

Floor Standing Drives - Normal Duty

Electrical characteristics (*)

ATV930	Minimum Wire Cross Section at rated condition	
	Supply Terminals (L1, L2, L3)	Output Terminals (U, V, W)
	mm² (AWG)	mm² (AWG)
C11N4F	1 x (3 x 150 mm²) or 2 x (3 x 70 mm²)	1 x (3 x 120 mm²) or 2 x (3 x 70 mm²)
C13N4F	1 x (3 x 185 mm²) or 2 x (3 x 70 mm²)	1 x (3 x 150 mm²) or 2 x (3 x 70 mm²)
C16N4F	1 x (3 x 185 mm²) or 2 x (3 x 95 mm²)	1 x (3 x 185 mm²) or 2 x (3 x 95 mm²)
C20N4F	2 x (3 x 120 mm²) or 3 x (3 x 70 mm²)	2 x (3 x 120 mm²) or 3 x (3 x 70 mm²)
C25N4F	2 x (3 x 185 mm²) or 3 x (3 x 95 mm²)	2 x (3 x 150 mm²) or 3 x (3 x 95 mm²)
C31N4F	3 x (3 x 150 mm²) or 4 x (3 x 95 mm²)	2 x (3 x 185 mm²) or 4 x (3 x 120 mm²)
(*) Minimum wire cross section to be applied when the product is used at rated power.		

Mechanical characteristics

ATV930	Rated Tightening Torque
	Supply Terminals (L1, L2, L3) Output Terminals (U, V, W)
	N·m (lbf.in)
C11N4F...C31N4F	47 (415)

Floor Standing Drives - Heavy Duty

Electrical characteristics (*)

ATV930	Minimum Wire Cross Section at rated condition	
	Supply Terminals (L1, L2, L3)	Output Terminals (U, V, W)
	mm² (AWG)	mm² (AWG)
C11N4F	1 x (3 x 150 mm²) or 2 x (3 x 70 mm²)	1 x (3 x 150 mm²) or 2 x (3 x 70 mm²)
C13N4F	1 x (3 x 185 mm²) or 2 x (3 x 70 mm²)	1 x (3 x 150 mm²) or 2 x (3 x 70 mm²)
C16N4F	1 x (3 x 185 mm²) or 2 x (3 x 70 mm²)	1 x (3 x 150 mm²) or 2 x (3 x 70 mm²)
C20N4F	2 x (3 x 95 mm²)	1 x (3 x 185 mm²) or 2 x (3 x 95 mm²)
C25N4F	2 x (3 x 120 mm²) or 3 x (3 x 70 mm²)	2 x (3 x 120 mm²) or 3 x (3 x 70 mm²)
C31N4F	3 x (3 x 150 mm²) or 4 x (3 x 95 mm²)	2 x (3 x 185 mm²) or 4 x (3 x 120 mm²)
(*) Minimum wire cross section to be applied when the product is used at rated power.		

Mechanical characteristics

ATV930	Rated Tightening Torque
	Supply Terminals (L1, L2, L3) Output Terminals (U, V, W)
	N·m (lbf.in)
C11N4F...C31N4F	47 (415)

NOTE: Only use cables with solid wires or rigid stranded wires.

Wiring The Power Part

Access To The Terminals For Frame Sizes 1 to 3, IP21 Drives for 200...240 V, 380...480 V and 600 V Supply Mains

⚠⚠DANGER

HAZARD OF ELECTRIC SHOCK, EXPLOSION OR ARC FLASH

Read and understand the instructions in **Product Related Information** chapter before performing any procedure in this chapter.

Failure to follow these instructions will result in death or serious injury.

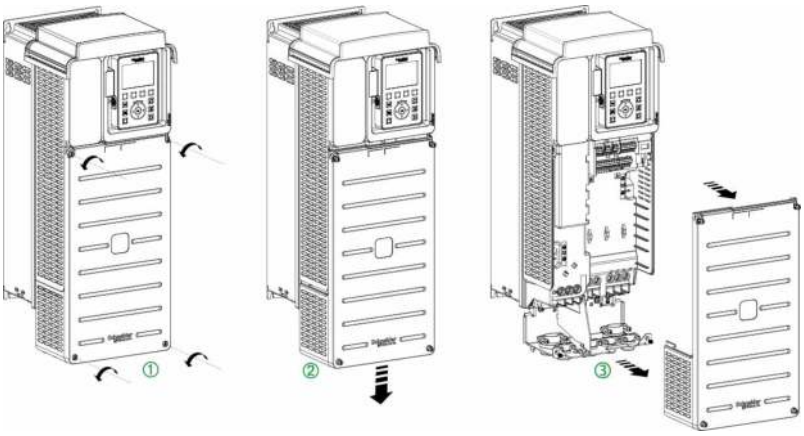

Apply the following instructions to access the terminals on **frame sizes 1 to 3** drives

Step	Action
1	Unscrew the 4 screws attaching the housing
2	Slide down the front cover
3	Remove the front cover
4	Refit the front cover on completion of wiring. Tighten the screws to 1.5 N•m / 13.3 lb-in.

Access To The Terminals For Frame Sizes 1 to 3, IP20 Drives for cabinet integration, 380...480 V Supply Mains

⚠⚠DANGER

HAZARD OF ELECTRIC SHOCK, EXPLOSION OR ARC FLASH

Read and understand the instructions in **Product Related Information** chapter before performing any procedure in this chapter.

Failure to follow these instructions will result in death or serious injury.

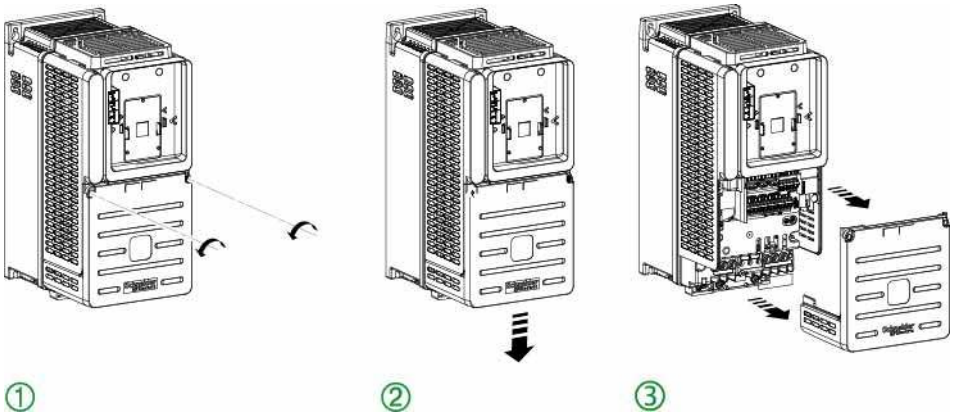

Apply the following instructions to access the terminals on **frame sizes 1 to 3** IP20 drives

Step	Action
1	Unscrew the 2 screws attaching the housing
2	Slide down the front cover
3	Remove the front cover
4	Refit the front cover on completion of wiring. Tighten the screws to 1.5 N•m / 13.3 lb-in.

Access To The Terminals For Frame Sizes 3S and 5S, for 600 V Supply Mains

⚠⚠DANGER

HAZARD OF ELECTRIC SHOCK, EXPLOSION OR ARC FLASH

Read and understand the instructions in **Product Related Information** chapter before performing any procedure in this chapter.

Failure to follow these instructions will result in death or serious injury.

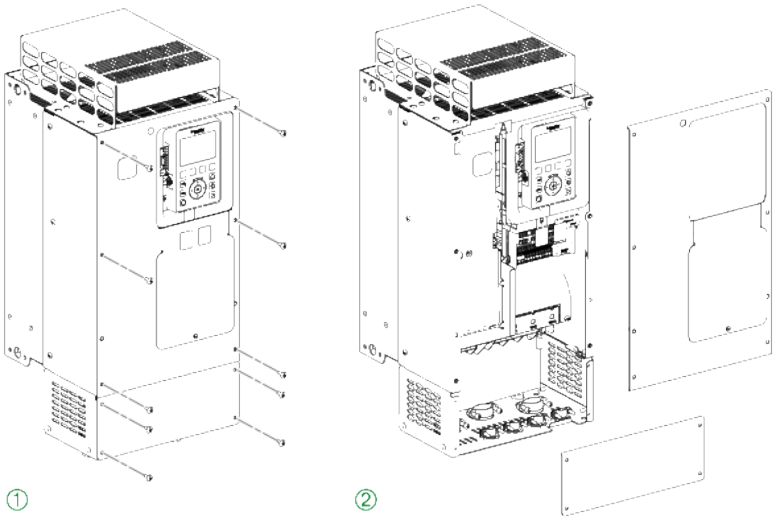

Apply the following instructions to access the terminals on **frame sizes 3S and 5S** drives

Step	Action
1	Unscrew the 10 screws attaching the housing
2	Remove the front covers
3	Refit the front cover on completion of wiring. Tighten the screws to 1.5 N•m / 13.3 lb-in.

Access To The Terminals For Frame Sizes 3Y and 5Y, for 500...690 V Supply Mains

DANGER

HAZARD OF ELECTRIC SHOCK, EXPLOSION OR ARC FLASH

Read and understand the instructions in **Product Related Information** chapter before performing any procedure in this chapter.

Failure to follow these instructions will result in death or serious injury.

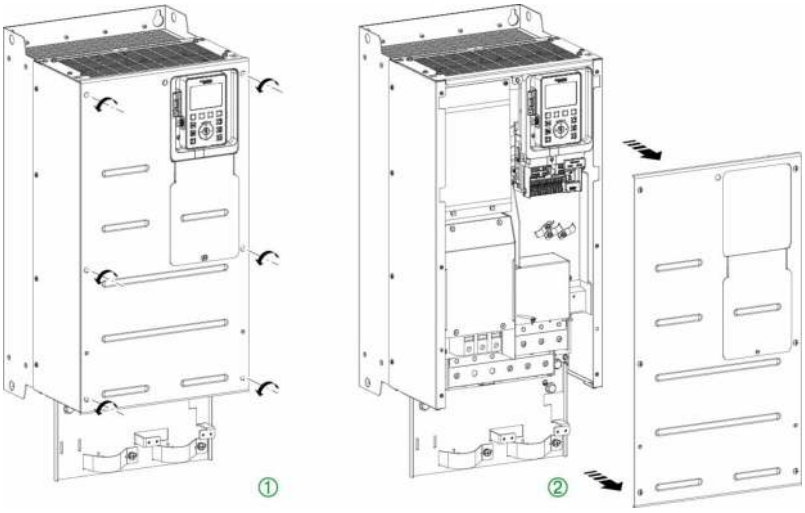

Apply the following instructions to access the terminals on **frame sizes 3Y and 5Y** drives

Step	Action
1	Unscrew the 6 screws attaching the housing
2	Remove the front cover
3	Refit the front cover on completion of wiring. Tighten the screws to 1.5 N•m / 13.3 lb-in.

Access To The Terminals For Frame Sizes 4 and 5, IP21 Drives

⚠⚠DANGER

HAZARD OF ELECTRIC SHOCK, EXPLOSION OR ARC FLASH

Read and understand the instructions in **Product Related Information** chapter before performing any procedure in this chapter.

Failure to follow these instructions will result in death or serious injury.

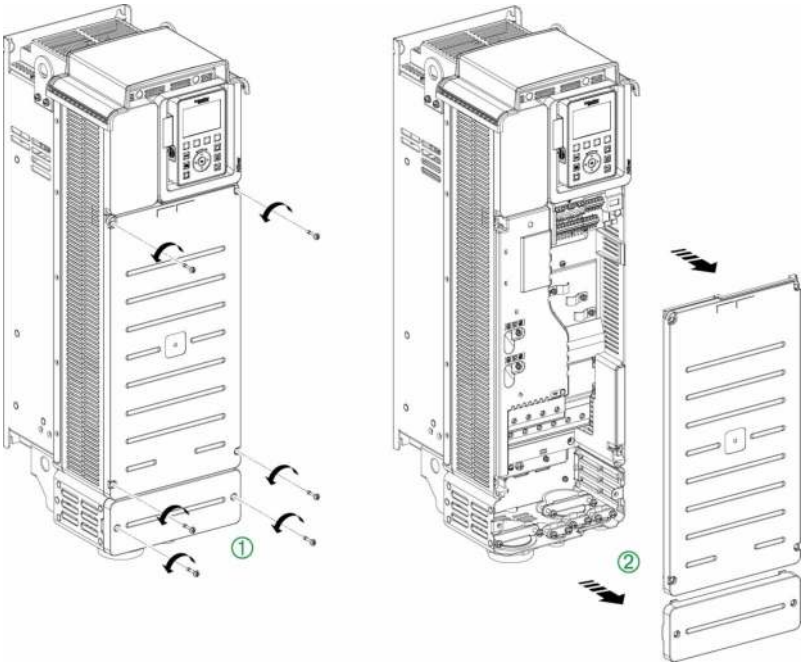

Apply the following instructions to access the terminals on **frame sizes 4 and 5** drives

Step	Action
1	Unscrew the 6 screws (frame size 4) ot the 8 screws (frame size 5) attaching the front and bottom covers
2	Remove the covers
3	On completion of wiring... • Refit the power terminal cover • Refit the front cover Tighten the front cover screws to... • 1.1 N•m / 9.7 lb-in for frame size 4 • 2.6 N•m / 23 lb-in for frame size 5

Access To The Terminals For Frame Sizes 4 and 5, Drives for cabinet integration, 380...480 V Supply Mains

⚠⚠DANGER

HAZARD OF ELECTRIC SHOCK, EXPLOSION OR ARC FLASH

Read and understand the instructions in **Product Related Information** chapter before performing any procedure in this chapter.

Failure to follow these instructions will result in death or serious injury.

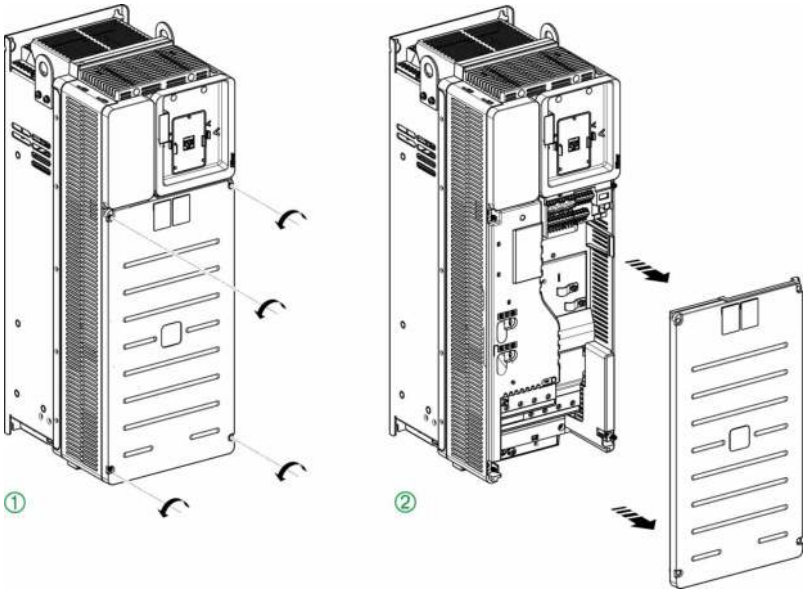

Apply the following instructions to access the terminals on **frame sizes 4 and 5** drives

Step	Action
1	Unscrew the 4 screws attaching the front cover
2	Remove the cover
3	On completion of wiring refit the front cover. Tighten the front cover screws to... • 1.1 N•m / 9.7 lb-in for frame size 4 • 2.6 N•m / 23 lb-in for frame size 5

Access To The Terminals - Frame Size 6

DANGER

HAZARD OF ELECTRIC SHOCK, EXPLOSION OR ARC FLASH

Read and understand the instructions in **Product Related Information** chapter before performing any procedure in this chapter.

Failure to follow these instructions will result in death or serious injury.

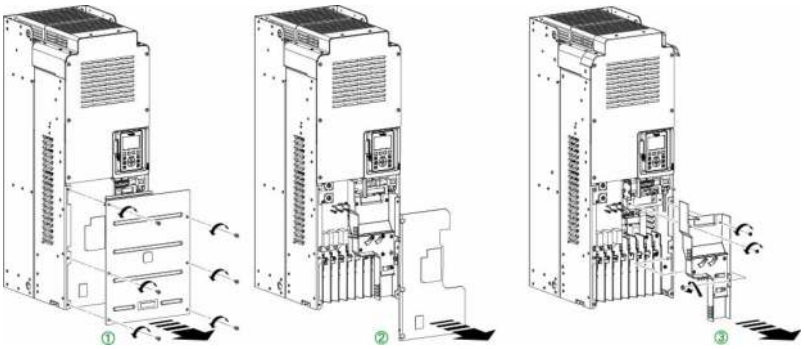

Apply the following instructions to access the terminals on **frame size 6** drives

Step	Action
1	Unscrew the 6 screws attaching the bottom front cover and remove it
2	Remove the terminal cover
3	Remove the cable duct
4	Refit the front cover on completion of wiring. Tighten the screws to 3.3 N•m / 29.3 lb-in.

Access To The Terminals - Frame Size 7

⚠⚠DANGER

HAZARD OF ELECTRIC SHOCK, EXPLOSION OR ARC FLASH

Read and understand the instructions in **Product Related Information** chapter before performing any procedure in this chapter.

Failure to follow these instructions will result in death or serious injury.

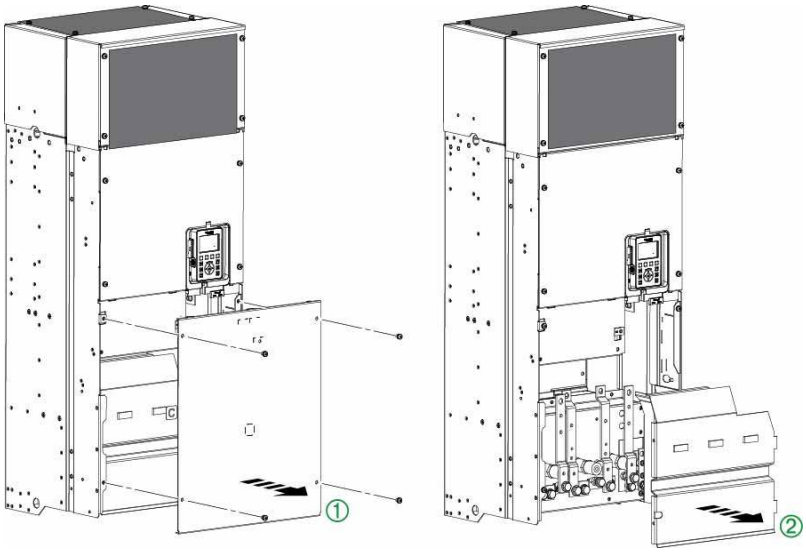

Apply the following instructions to access the terminals on **frame size 7** drives

Step	Action
1	Unscrew the 4 screws attaching the bottom front cover and remove it
2	Remove the terminal cover
3	Refit the front cover on completion of wiring. Tighten the screws to 4.2 N•m / 37.17 lb-in.

Access To The Terminals For Frame Size A

⚠⚠DANGER

HAZARD OF ELECTRIC SHOCK, EXPLOSION OR ARC FLASH

Read and understand the instructions in **Product Related Information** chapter before performing any procedure in this chapter.

Failure to follow these instructions will result in death or serious injury.

Apply the following instructions to access the terminals on **frame size A** drives

Step	Action
1	Unscrew the 4 captive screws attaching the housing
2	Remove the front cover
3	Attach it on the left or right side of the housing
4	Refit the front cover on completion of wiring. Tighten the screws to 1.5 N•m / 13.3 lb-in.

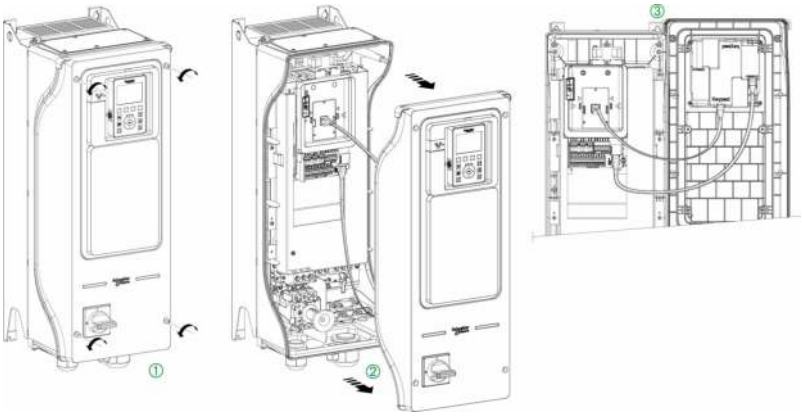

Access To The Terminals For Frame Sizes B and C

⚠⚠DANGER

HAZARD OF ELECTRIC SHOCK, EXPLOSION OR ARC FLASH

Read and understand the instructions in **Product Related Information** chapter before performing any procedure in this chapter.

Failure to follow these instructions will result in death or serious injury.

Apply the following instructions to access the terminals on **frame sizes B and C** drives

Step	Action
1	Unscrew the screw attaching the housing
2	Open the front cover
3	Refit the front cover on completion of wiring. Tighten the screws to 1.5 N•m / 13.3 lb-in.

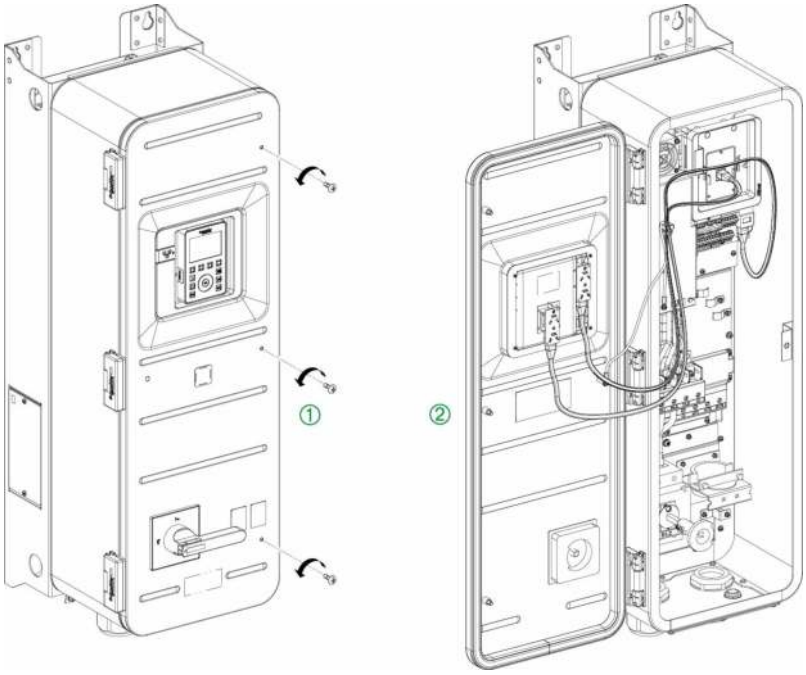

Access To The Terminals - Floor Standing Drives

DANGER

HAZARD OF ELECTRIC SHOCK, EXPLOSION OR ARC FLASH

Read and understand the instructions in **Product Related Information** chapter before performing any procedure in this chapter.

Failure to follow these instructions will result in death or serious injury.

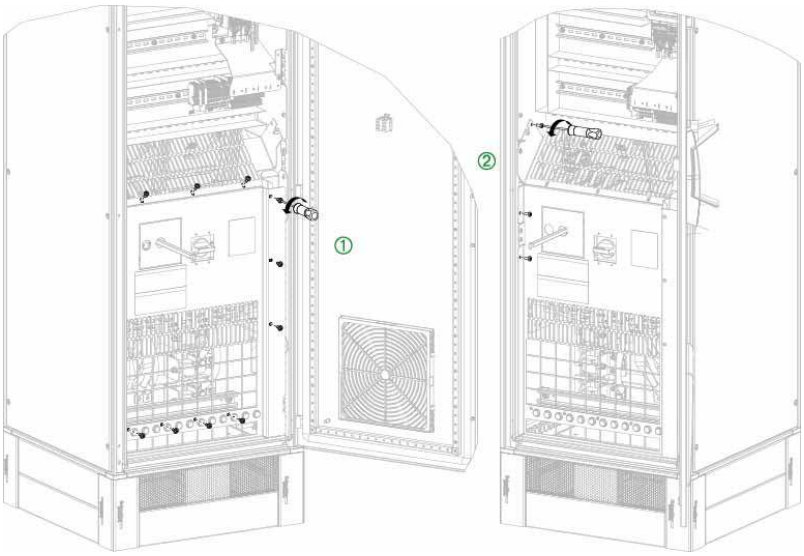

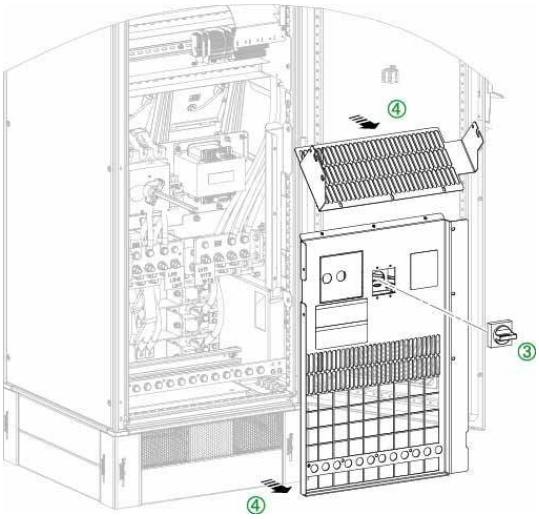

Apply the following instructions to access the terminals on **Floor Standing** drives

Step	Action
1	Open the enclosure. Unscrew the 9 front screws of both upper and lower covers
2	Unscrew the 3 side screws of both upper and lower covers
3	Remove the internal switch handle
4	Remove both upper and lower covers to access the power terminals.
5	On completion of wiring... • Refit both upper and lower covers • Tighten the screws to 5.5 N•m / 48.6 lb-in • Refit the internal switch handle

Frame Size 1 and Frame Size A Cable Path

Correspondence Table Between Frame Size A and Frame Size 1

Power Rating		Frame Size A Drives	Frame Size 1 Drives
kW	HP	Catalog Number	Catalog Number
0.75	1	ATV950U07N4•	ATV930U07N4
1.5	2	ATV950U15N4•	ATV930U15N4
2.2	3	ATV950U22N4•	ATV930U22N4
3	-	ATV950U30N4•	ATV930U30N4
4	5	ATV950U40N4•	ATV930U40N4
5.5	7 1/2	ATV950U55N4•	ATV930U55N4

Wire the power cables as shown below (example for wall mounting drives).

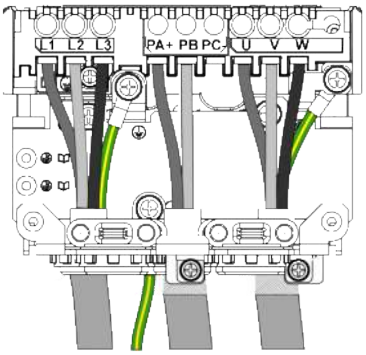

PA/+ and PB terminals are used to connect a braking resistor. Refer to the braking resistor instruction sheet NHA87388 available on www.se.com.

Frame Size 2 and Frame Size A Cable Path

Correspondence Table Between Frame Size A and Frame Size 2

Power Rating		Frame Size A Drives	Frame Size 2 Drives
kW	HP	Catalog Number	Catalog Number
7.5	10	ATV950U75N4•	ATV930U75N4
11	15	ATV950D11N4•	ATV930D11N4

Wire the power cables as shown below (example for wall mounting drives).

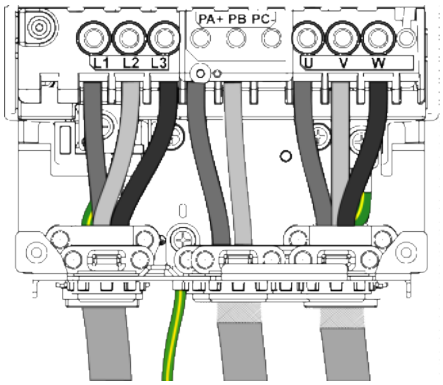

PA/+ and PB terminals are used to connect a braking resistor. Refer to the braking resistor instruction sheet NHA87388 available on www.se.com.

Frame Size 3 and Frame Size A Cable Path

Correspondence Table Between Frame Size A and Frame Size 3

Power Rating		Frame Size A Drives	Frame Size 3 Drives
kW	HP	Catalog Number	Catalog Number
15	20	ATV950D15N4•	ATV930D15N4
18.5	25	ATV950D18N4•	ATV930D18N4
22	30	ATV950D22N4•	ATV930D22N4

Wire the power cables as shown below (example for wall mounting drives).

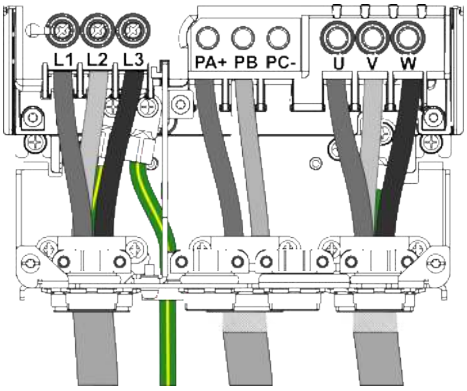

PA/+ and PB terminals are used to connect a braking resistor. Refer to the braking resistor instruction sheet NHA87388 available on www.se.com.

Frame Size 3S Cable Path

Wire the power cables as shown below.

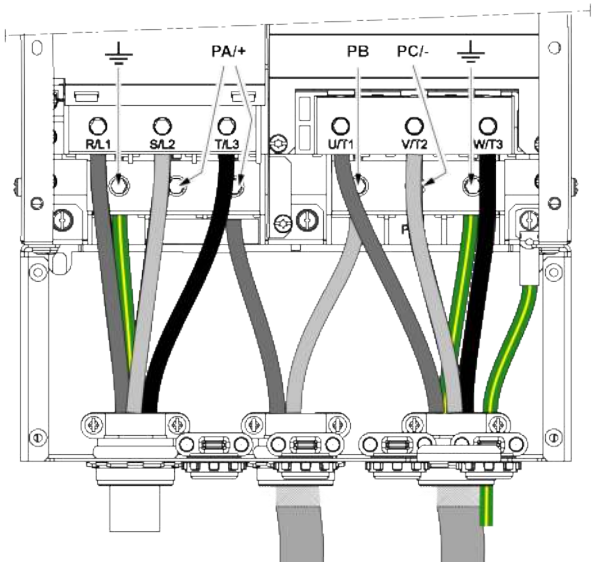

PA/+ and PB terminals are used to connect a braking resistor. Refer to the braking resistor instruction sheet NHA87388 available on www.se.com.

Frame Size 3Y Cable Path

NOTE: Due to accessible live parts on their lower part, these drives should be installed in enclosures or located behind enclosures or barriers, which comply at least with the requirements of IP2•, as per IEC61800-5-1.

Wire the power cables as shown below.

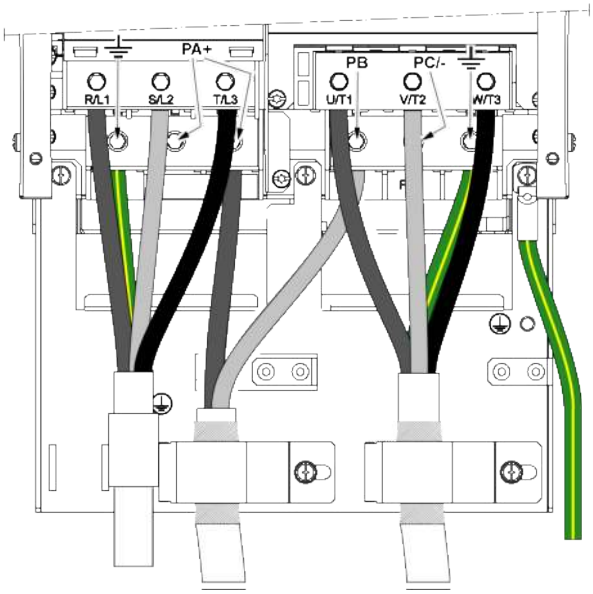

PA/+ and PB terminals are used to connect a braking resistor. Refer to the braking resistor instruction sheet NHA87388 available on www.se.com.

Frame Size 4 and Frame Size B Cable Path

Correspondence Table Between Frame Size B and Frame Size 4

Power Rating		Frame Size B Drives	Frame Size 4 Drives
kW	**HP**	**Catalog Number**	**Catalog Number**
30	40	ATV950D30N4•	ATV930D30N4
37	50	ATV950D37N4•	ATV930D37N4
45	60	ATV950D45N4•	ATV930D45N4

Wire the power cables as shown below (example for wall mounting drives).

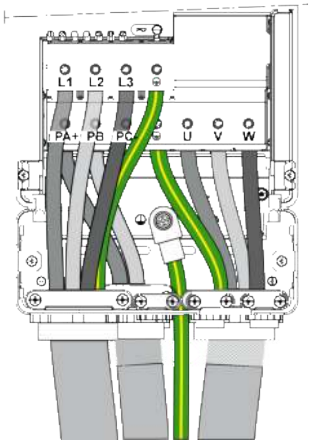

PA/+ and PB terminals are used to connect a braking resistor. Refer to the braking resistor instruction sheet NHA87388 available on www.se.com.

Frame Size 5 and Frame Size C Cable Path

Correspondence Table Between Frame Size C and Frame Size 5

Power Rating		Frame Size C Drives	Frame Size 5 Drives
kW	**HP**	**Catalog Number**	**Catalog Number**
55	75	ATV950D55N4•	ATV930D55N4
75	100	ATV950D75N4•	ATV930D75N4
90	125	ATV950D90N4•	ATV930D90N4

Wire the power cables as shown below (example for wall mounting drives).

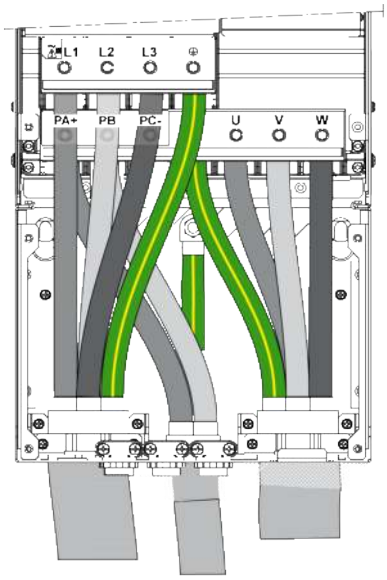

PA/+ and PB terminals are used to connect a braking resistor. Refer to the braking resistor instruction sheet NHA87388 available on www.se.com.

Frame Size 5S Cable Path

Wire the power cables as shown below.

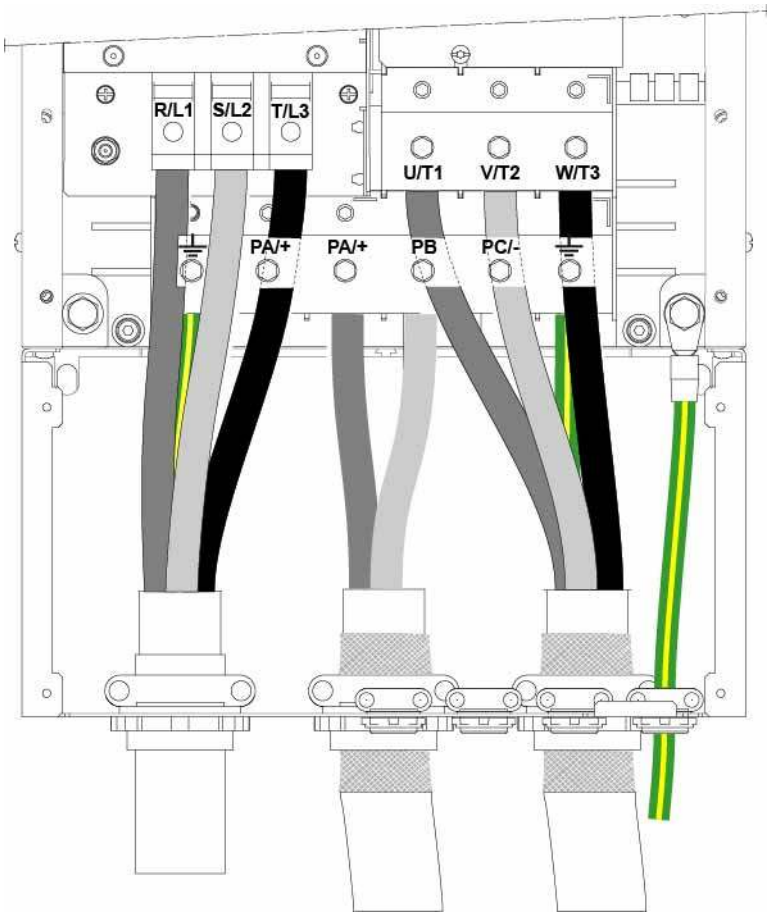

PA/+ and PB terminals are used to connect a braking resistor. Refer to the braking resistor instruction sheet NHA87388 available on www.se.com.

Frame Size 5Y Cable Path

NOTE: Due to accessible live parts on their lower part, these drives should be installed in enclosures or located behind enclosures or barriers, which comply at least with the requirements of IP2•, as per IEC61800-5-1.

Wire the power cables as shown below.

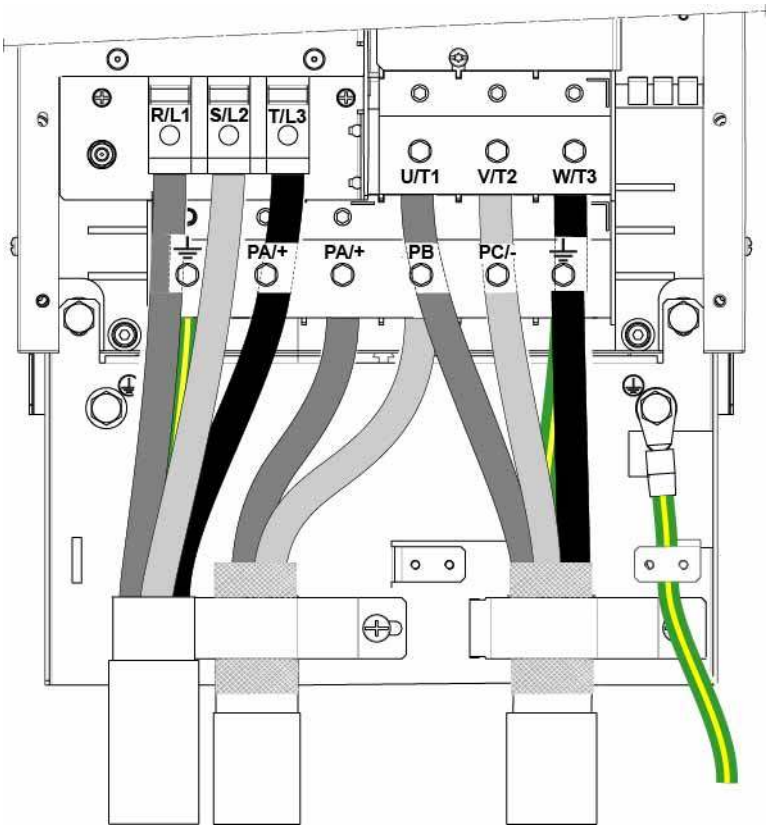

PA/+ and PB terminals are used to connect a braking resistor. Refer to the braking resistor instruction sheet NHA87388 available on www.se.com.

Frame Size 6 Cable Path

NOTE: Due to accessible live parts on their lower part, these drives should be installed in enclosures or located behind enclosures or barriers, which comply at least with the requirements of IP2•, as per IEC61800-5-1.

Use 1 or 2 connection cables per terminal, depending on the cable characteristics. Refer to standard IEC 60364-5-52 for cable selection. Permissible cable cross sections are given in the Power Terminals section, page 178.

For 1 cable connection, wire the power cables as shown below.

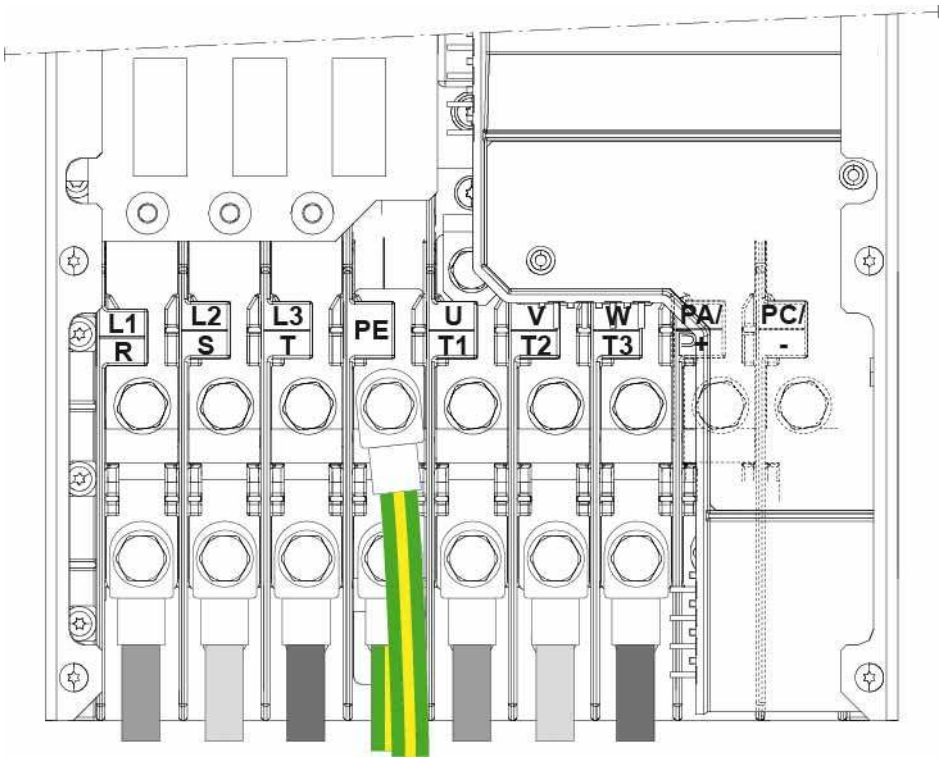

NOTE: PA/+ and PC/- terminals are used to connect the braking unit. Refer to the braking unit instruction sheet NVE16635 available on www.se.com.

NOTE: A conduit box is available as an option. It enables an IP21 degree of protection at the bottom side of the drive. See NHA52502 available on www.se.com.

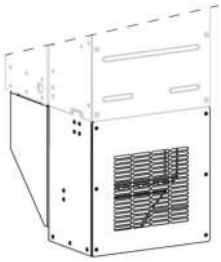

For 2 connection cable wiring:

Step	Action
1	Connect the first cable on the lower terminal
2	Connect the other cable on the upper terminal

Wire the power cables as shown below.

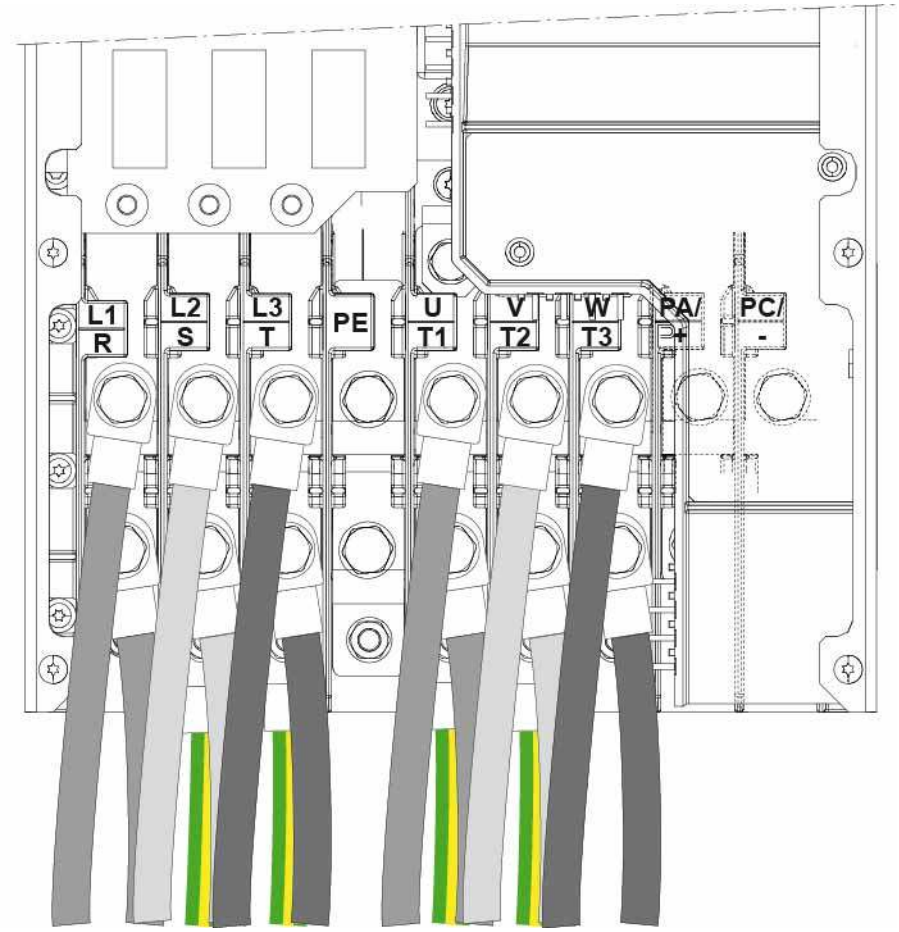

Frame Size 7A Cable Path

NOTE: Due to accessible live parts on their lower part, these drives should be installed in enclosures or located behind enclosures or barriers, which comply at least with the requirements of IP2•, as per IEC61800-5-1.

Refer to standard IEC 60364-5-52 for cable selection. Permissible cable cross sections are given in the Power Terminals section, page 178.

Wire the power cables as shown below:

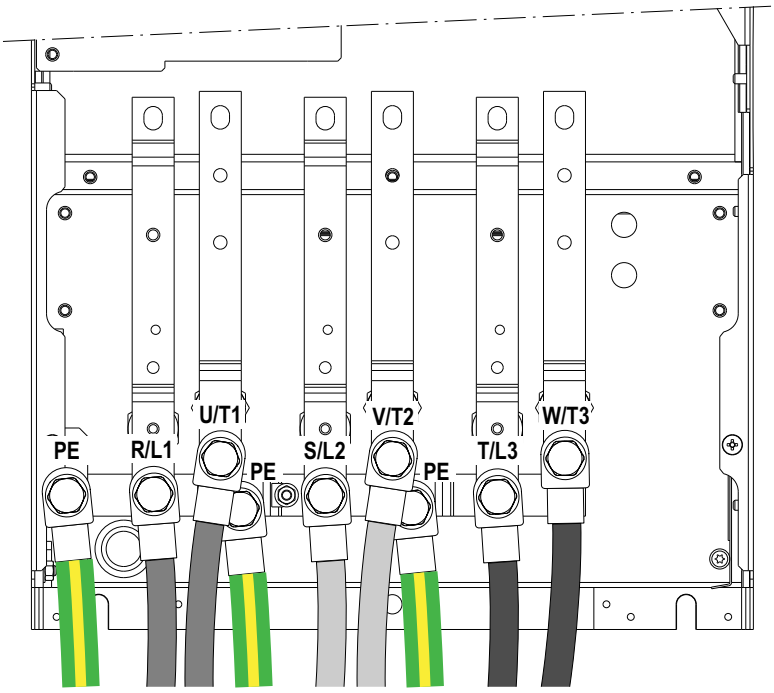

To connect the braking unit. Refer to the braking unit manual 1757084 available on www.se.com.

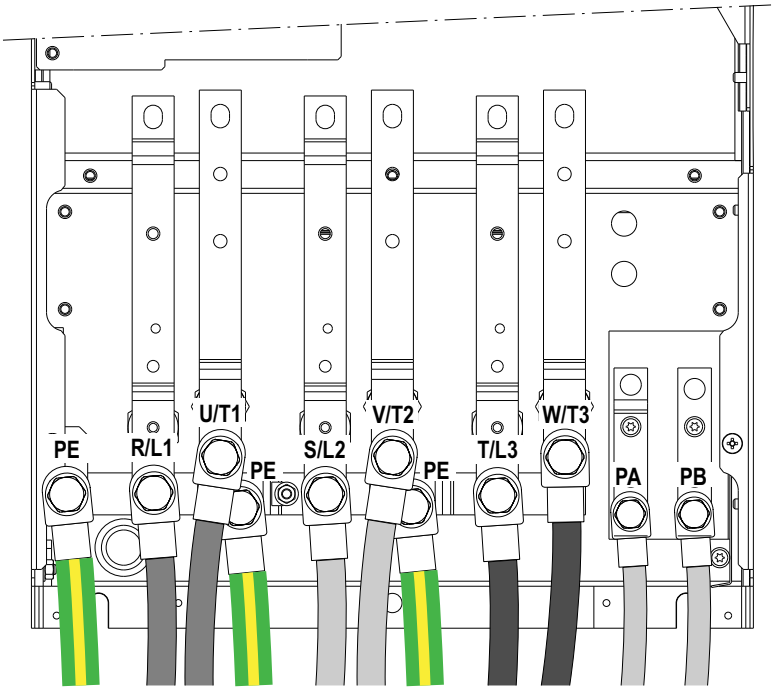

PA/+ and PB terminals are used to connect a braking resistor. Refer to the braking resistor instruction sheet NHA87388 available on www.se.com.

Cable wiring:

Step	Action
1	Connect the first cable on the lower terminal
2	Connect the other cable on the upper terminal

NOTE: Wiring of the DC chokes is described in the Installing the DC Choke section, page 147.

Frame Size 7B Cable Path

NOTE: Due to accessible live parts on their lower part, these drives should be installed in enclosures or located behind enclosures or barriers, which comply at least with the requirements of IP2•, as per IEC61800-5-1.

Refer to standard IEC 60364-5-52 for cable selection. Permissible cable cross sections are given in the Power Terminals section, page 178.

Wire the power cables as shown below.

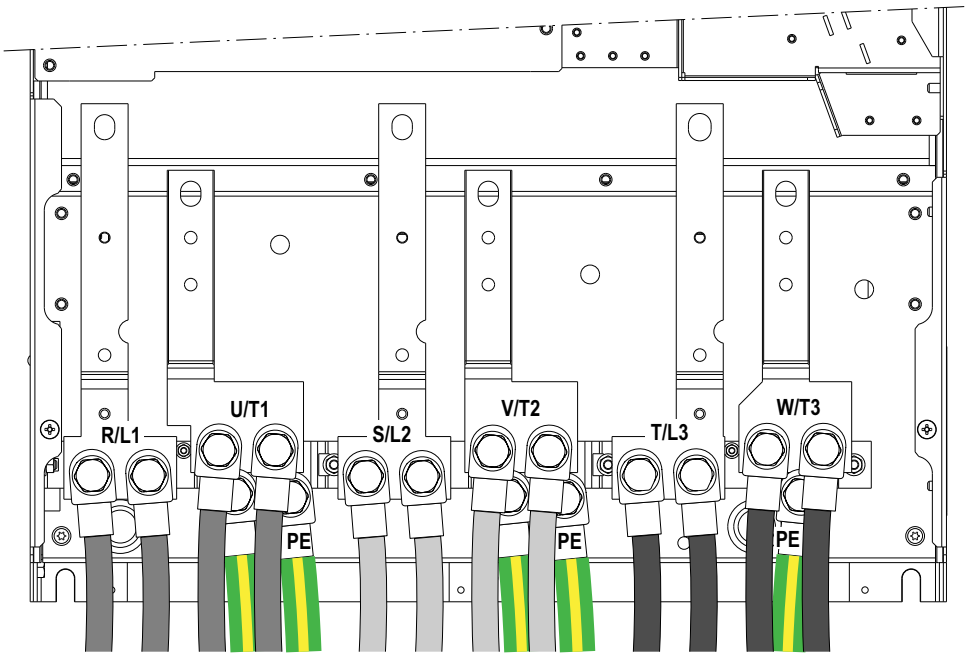

To connect the braking unit. Refer to the braking unit manual 1757084 available on www.se.com.

Cable wiring:

Step	Action
1	Connect the first cable on the lower terminal
2	Connect the other cable on the upper terminal

NOTE: Wiring of the DC chokes is described in the Installing the DC Choke section, page 147.

Frame Size 7A and 7B DC Bus terminals

The figure below shows where to find DC Bus terminals (PA/+, PC/-).

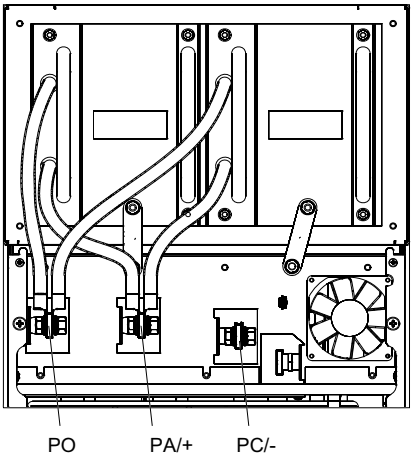

Connecting Fans For a Separate Power Supply on Frame Sizes 7A and 7B

Power consumed by the fans

ATV930 drive	Power consumed by the fans (VA)
C22N4•, C25N4•	1,100
C31N4•	2,200

In order to remove the link between the fans and power supply terminals R/L1, S/L2, T/L3 and relocate it at terminals R0, S0, T0. Cross the connectors X1 and X4 as indicated on the diagram below.

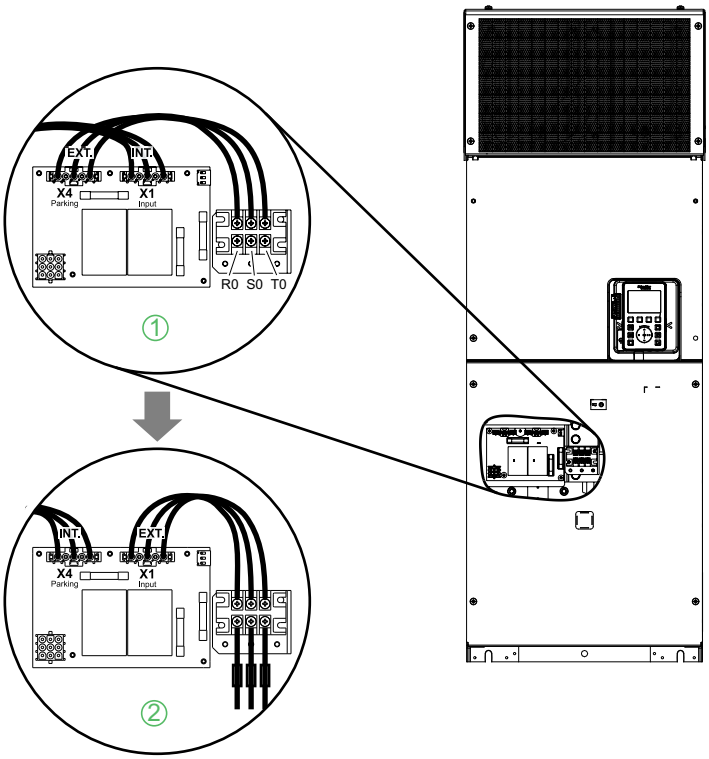

① Factory wiring: Fans powered internally by R/L1, S/L2, T/L3.

② Modification for fans powered externally by R0, S0, T0.

NOTE: The rated tightening torque on R0, S0, T0 terminals is 1.4 N.m / 12.4 lbf.in.

Floor Standing Drives - Wiring Procedure

Permissible cable cross sections and tightening torques are given in the Power Terminals section, page 178.

NOTE: The cable length from the bottom of the drive to the terminals is between 350 mm (13.8 in.) and 420 mm (16.6 in.), depending on the rank of the terminal.

Perform the following instructions to connect the power part:

Step	Action
1	Verify the input mains supply voltage. The drive transformer is factory set to suit a 380/400 Vac mains supply input voltage. If the supply mains voltage is between 415 and 440 Vac, disconnect P1 transformer terminal and connect the wire to the P2 terminal.
2	Connect the supply mains cable lugs to the power input terminals L1, L2, L3. Attach the PE cable lug to the Ground bar.
3	Connect the motor cable lugs to the power output terminals U, V, W. Attach the PE cable lug to the Ground bar.
4	Position the lower cable clamp on the insulated part of the supply mains cable and attach it to the lower rail. Position the upper cable clamp on the cable shielding of the motor cable and attach it to the upper rail. Position the lower cable clamp on the insulated part of the motor cable and attach it to the lower rail.

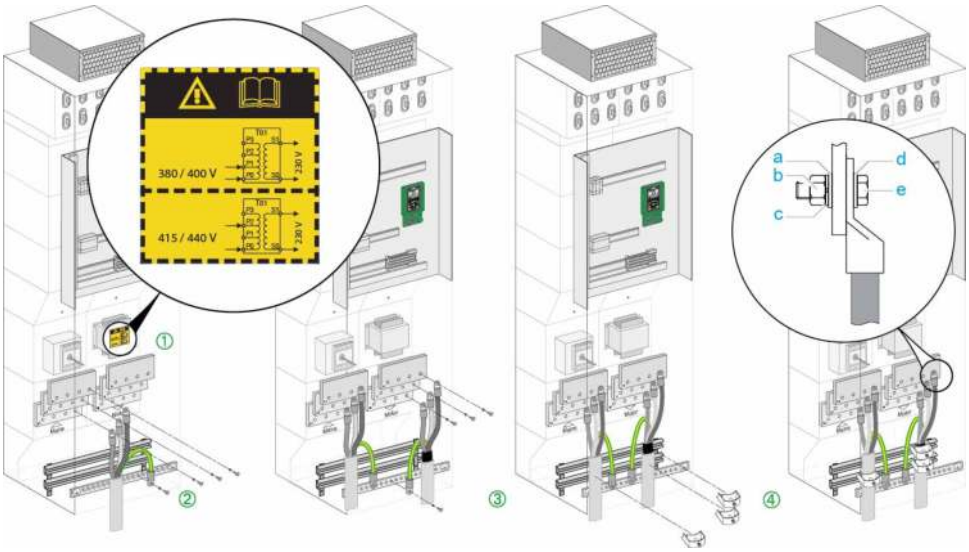

a flat washer

b nut

c spring washer

d flat washer

e M12 screw

Electromagnetic Compatibility

Limit Values

This product meets the EMC requirements according to the standard IEC 61800-3 if the measures described in this manual are implemented during installation.

If the selected composition (product itself, mains filter, other accessories and measures) does not meet the requirements of category C1, the following information applies as it appears in IEC 61800-3:

⚠ WARNING

RADIO INTERFERENCE

In a domestic environment this product may cause radio interference in which case supplementary mitigation measures may be required.

Failure to follow these instructions can result in death, serious injury, or equipment damage.

EMC requirements for the control cabinet

EMC measures	Objective
Use mounting plates with good electrical conductivity, connect large surface areas of metal parts, remove paint from contact areas.	Good conductivity due to large surface contact.
Ground the control cabinet, the control cabinet door and the mounting plate with ground straps or ground wires. The conductor cross section must be at least 10 mm^2 (AWG 8).	Reduces emissions.
Fit switching devices such as power contactors, relays or solenoid valves with interference suppression units or arc suppressors (for example, diodes, varistors, RC circuits).	Reduces mutual interference.
Install power components and control components separately.	
Install frame size 1 and 2 drives on grounded metal back plane.	Reduces emissions.

Shielded cables

EMC measures	Objective
Connect large surface areas of cable shields, use cable clamps and ground straps.	Reduces emissions.
Use cable clamps to connect a large surface area of the shields of all shielded cables to the mounting plate at the control cabinet entry.	
Ground shields of digital signal wires at both ends by connecting them to a large surface area or via conductive connector housings	Reduces interference affecting the signal wires, reduces emissions
Ground the shields of analog signal wires directly at the device (signal input); insulate the shield at the other cable end or ground it via a capacitor (for example, 10 nF, 100 V or higher.	Reduces ground loops due to low-frequency interference.
Use only shielded motor cables with copper braid and a coverage of at least 85%, ground a large surface area of the shield at both ends.	Diverts interference currents in a controlled way, reduces emissions.

Cable Installation

EMC measures	Objective
Do not route fieldbus cables and signal wires in a single cable duct together with lines with DC and AC voltages of more than 60 V. (Fieldbus cables, signal lines and analog lines may be in the same cable duct) Recommendation: Use separate cable ducts at least 20 cm (8 in.) apart.	Reduces mutual interference.
Keep cables as short as possible. Do not install unnecessary cable loops, use short cables from the central grounding point in the control cabinet to the external ground connection.	Reduces capacitive and inductive interference.
Use equipotential bonding conductors in the following cases: wide-area installations, different voltage supplies and installation across several buildings.	Reduces current in the cable shield, reduces emissions.
Use fine stranded equipotential bonding conductors.	Diverts high-frequency interference currents
If motor and machine are not conductively connected, for example by an insulated flange or a connection without surface contact, you must ground the motor with a ground strap or a ground wire. The conductor cross section must be at least 10 mm^2 (AWG 8).	Reduces emissions, increases immunity.
Use twisted pair for the DC supply. For digital and analog inputs use shielded twisted cables with a pitch of between 25...50 mm (1...2 in).	Reduces interference affecting the signal cables, reduces emissions.

Power Supply

EMC measures	Objective
Operate product on mains with grounded neutral point.	Enables effectiveness of mains filter.
Surge arrester if there is a risk of overvoltage.	Reduces the risk of damage caused by overvoltage.

Additional measures for EMC improvement

Depending on the application, the following measures can improve the EMC-dependent values:

EMC measures	Objective
Use mains chokes	Reduces mains harmonics, prolongs product service life.
Use external mains filters	Improves the EMC limit values.
Additional EMC measures, for example mounting in a closed control cabinet with 15 dB shielding attenuation of radiated interference	

NOTE: If using an additional input filter, it should be mounted as close as possible to the drive and connected directly to the supply mains via an unshielded cable.

Operation on an IT or Corner Grounded System

Definition

IT system: Isolated or impedance grounded neutral. Use a permanent insulation monitoring device compatible with nonlinear loads, such as an XM200 type or equivalent.

Corner grounded system: System with one phase grounded.

Operation

NOTICE
OVERVOLTAGE OR OVERHEATING If the drive is operated via an IT or corner grounded system, the integrated EMC filter must be disconnected as described in the present manual. **Failure to follow these instructions can result in equipment damage.**

Disconnecting The Built-in EMC Filter

Filter Disconnection

⚠⚠DANGER

HAZARD OF ELECTRIC SHOCK, EXPLOSION OR ARC FLASH

Read and understand the instructions in **Product Related Information** chapter before performing any procedure in this chapter.

Failure to follow these instructions will result in death or serious injury.

The drives have a built-in EMC filter. As a result they exhibit leakage current to ground. If the leakage current creates compatibility problems with your installation (residual current device or other), then you can reduce the leakage current by disconnecting the built-in filter as shown below. In this configuration the product does not meet the EMC requirements according to the standard IEC 61800-3.

Setting

Apply the following instructions to disconnect the built-in EMC filter.

Step	Action
1	Remove the front cover(s) , page 197
2	The screw(s) or switch is/are factory set to the ⏚ position, as shown on detail ①
3	For operation without the built-in EMC filter, remove the screw(s) from its/ their location or move the switch from its position and set it/them to the ⏚ position, as shown on detail ②
4	Refit the front cover(s)

NOTE:

- Use only the screw(s) supplied.
- Do not operate the drive with setting screw(s) removed.

Setting For Frame Size 1 Products

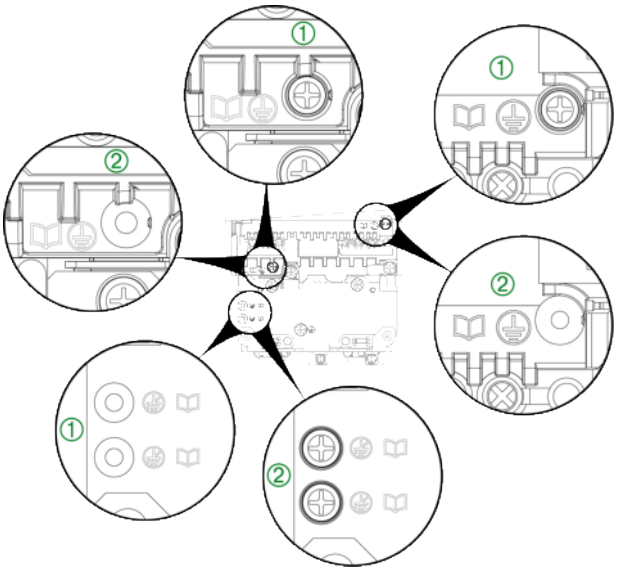

Tightening torque: 1.5 N.m

Setting For Frame Size 2 Products

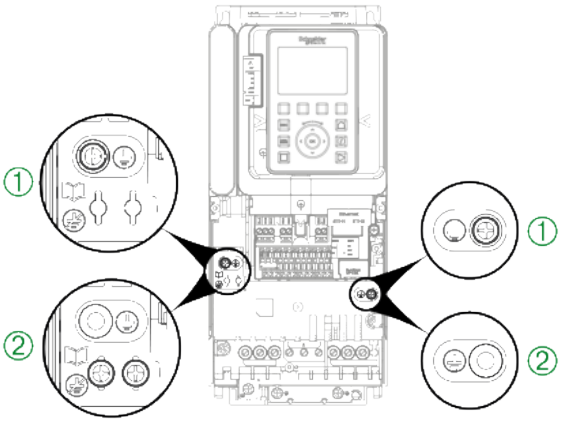

Tightening torque: 1.5 N.m

Setting For Frame Size 3 Products

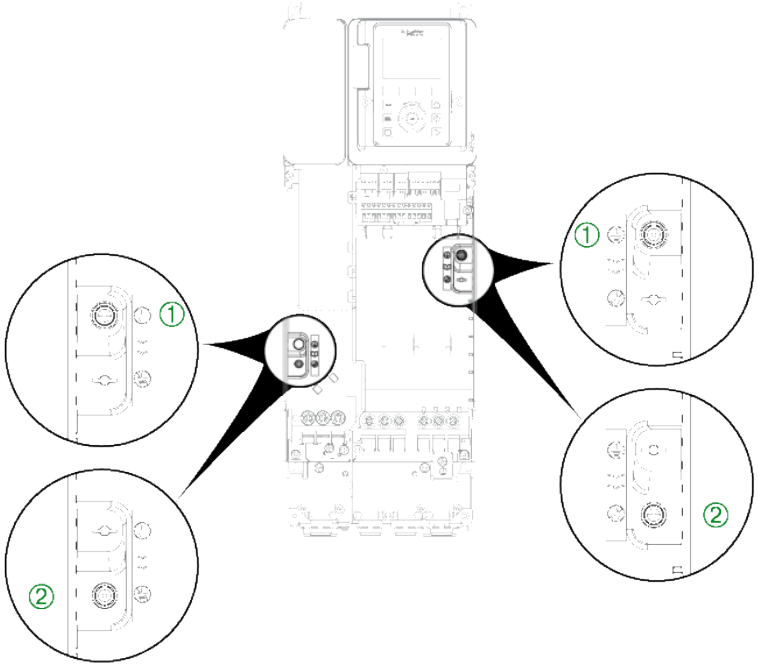

Tightening torque: 1.5 N.m

Setting For Frame Size 3S, Frame Size 3Y and Frame Size 4 Products, 200...240 V

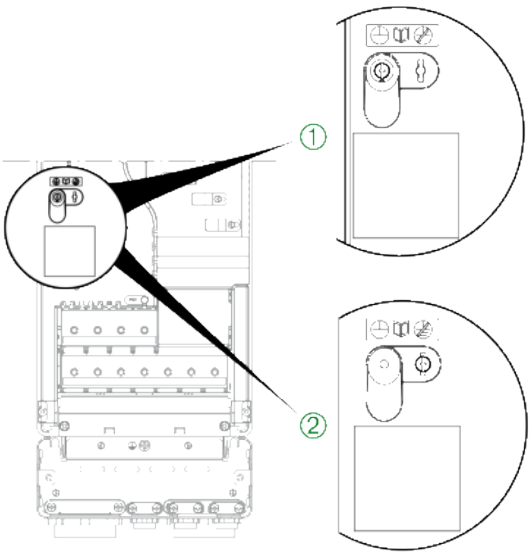

Tightening torque for Frame Size 3S and 3Y : 0.8 N.m

Tightening torque for Frame Size 4: 1.5 N.m

Setting For Frame Size 4 Products, 380...480V

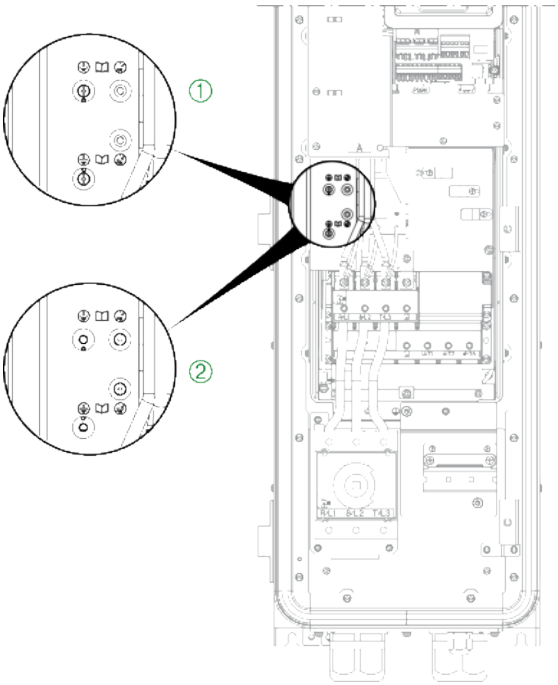

Tightening torque: 1.5 N.m

Setting For Frame Size 5 Products

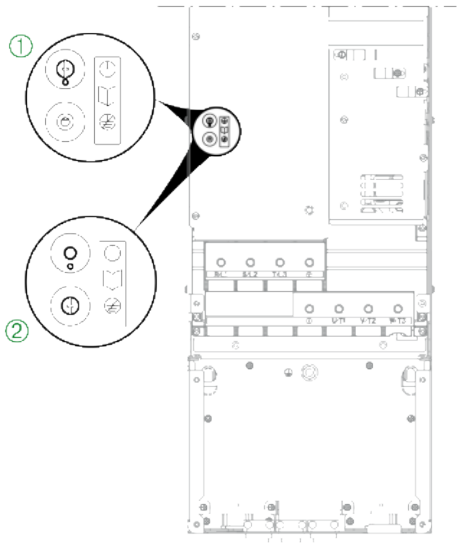

Tightening torque: 1.5 N.m

Setting For Frame Size 5S, Frame Size 5Y

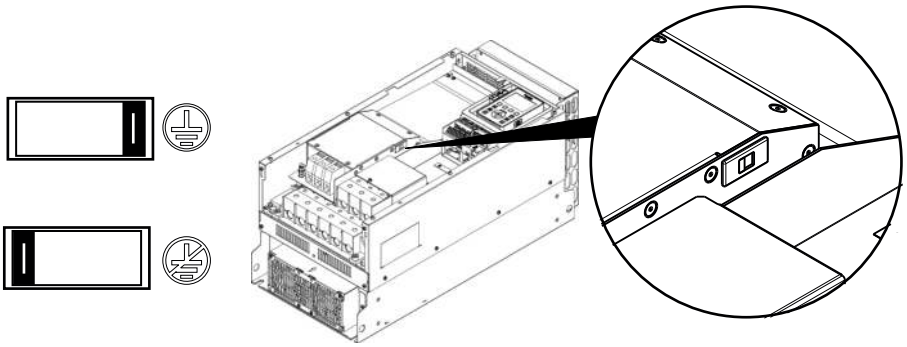

- ⏚: Normal (filter connected)
- ⏚: IT system (filter disconnected)

Setting For Frame Size 6 Products

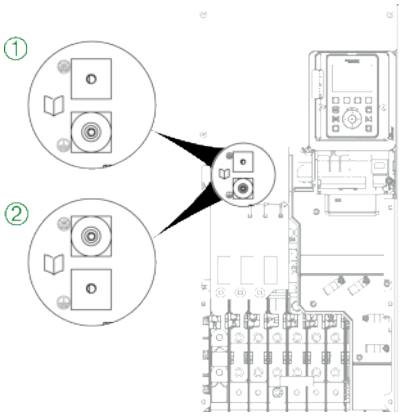

Tightening torque: 5.5 N.m

Setting For Frame Size 7A Products

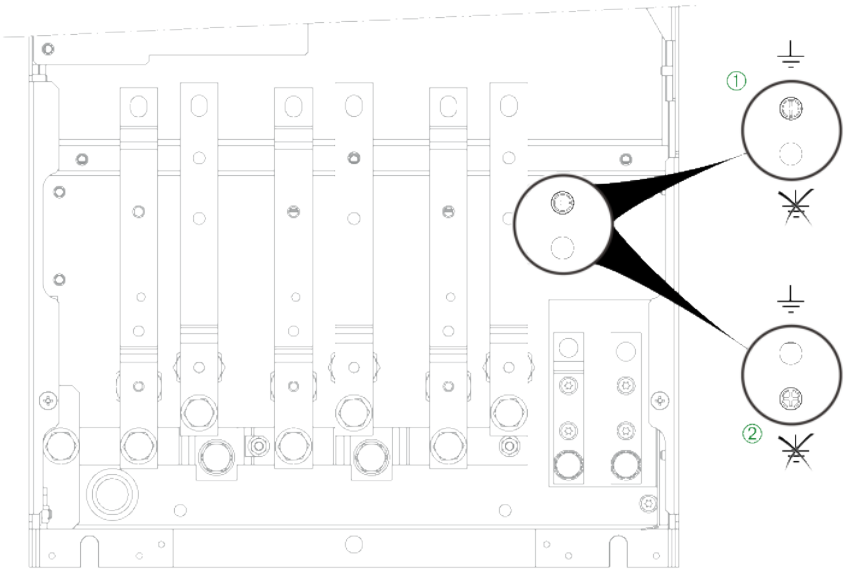

Tightening torque: 12 N.m

Setting For Frame Size 7B Products

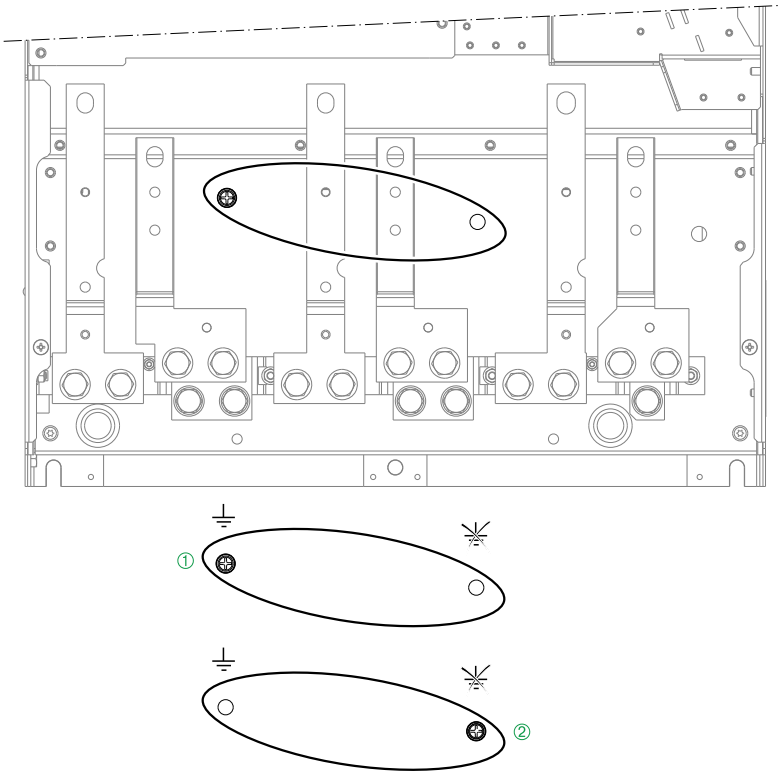

Tightening torque: 12 N.m

Setting For IP55 Frame Size A Products

ATV950U07N4(E)...U55N4(E)

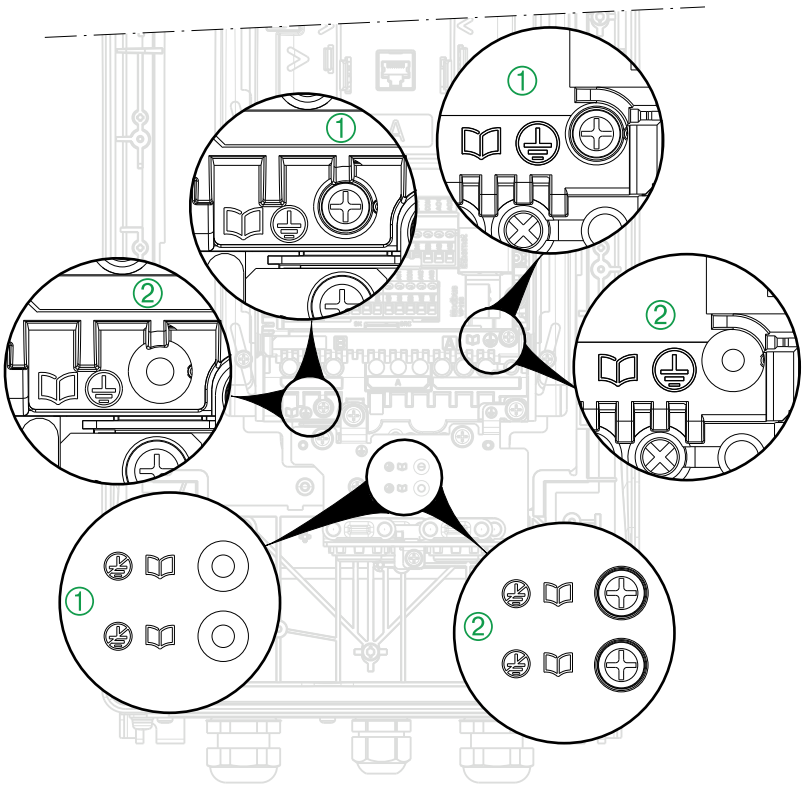

Tightening torque: 1.5 N.m

Setting For IP55 Frame Size A Products

ATV950U75N4(E)...D11N4(E)

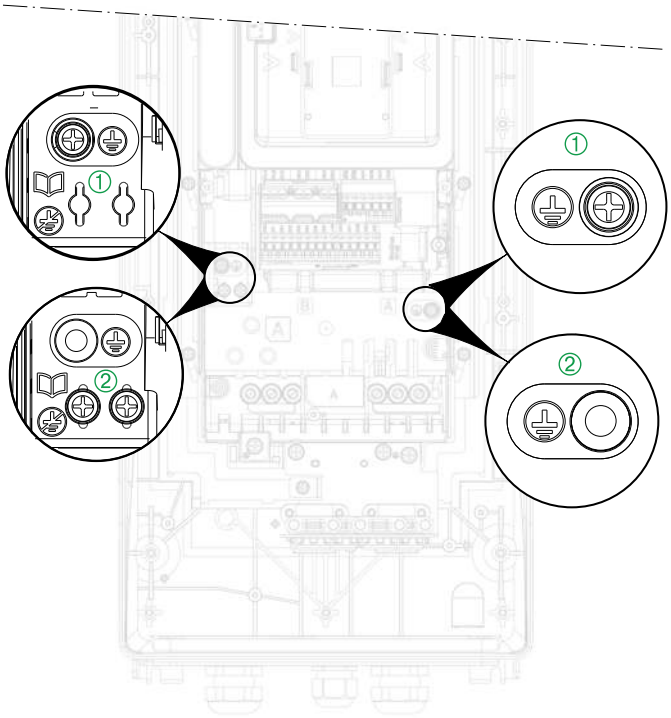

Tightening torque: 1.5 N.m

Setting For IP55 Frame Size A Products

ATV950D15N4(E)...D22N4(E)

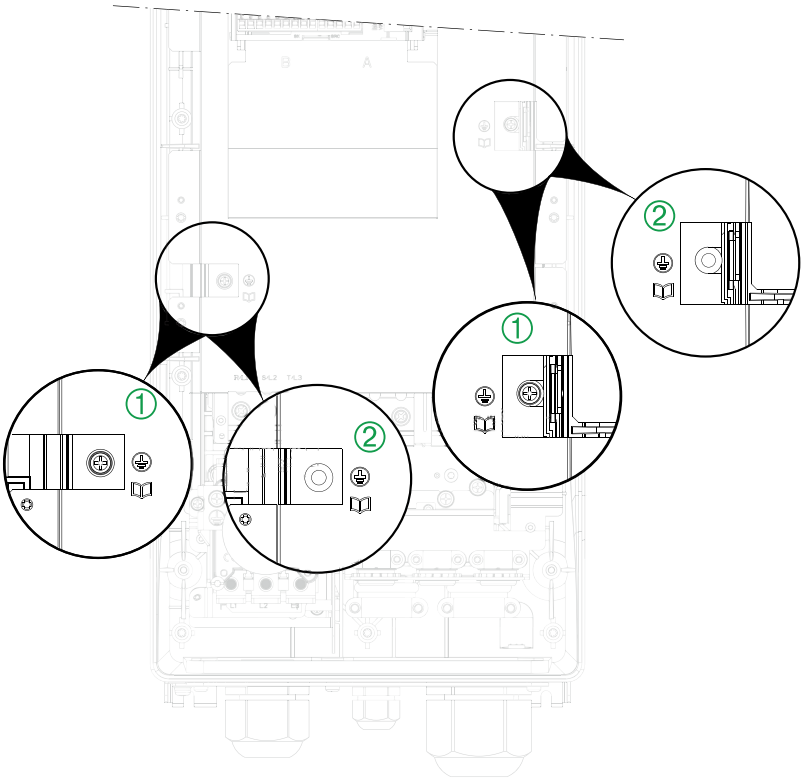

Tightening torque: 1.5 N.m

Setting For IP55 Frame Size B Products

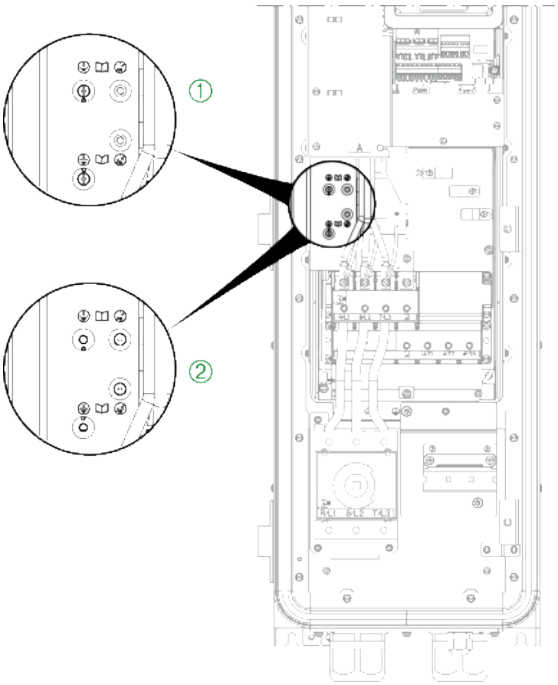

Tightening torque: 1.5 N.m

Setting For IP55 Frame Size C Products

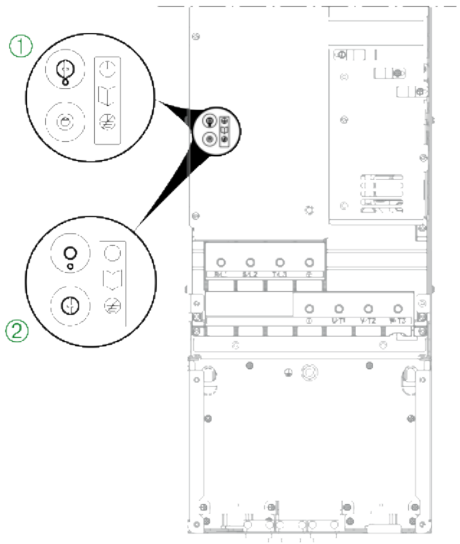

Tightening torque: 1.5 N.m

Setting For Floor Standing Products

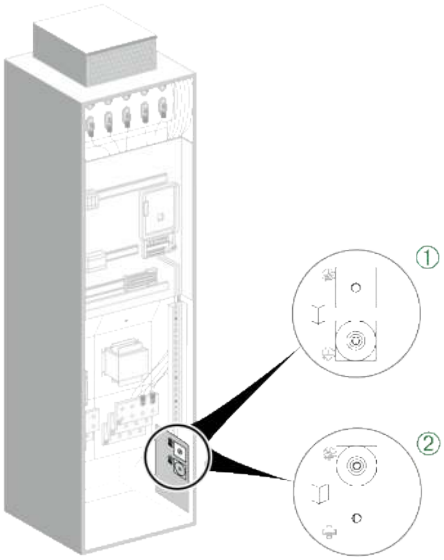

Tightening torque: 5.5 N.m

Arrangement and Characteristics of Control Block Terminals and Communication and I/O Ports

Terminal Arrangement

The control block terminals are the same for all drive frame sizes.

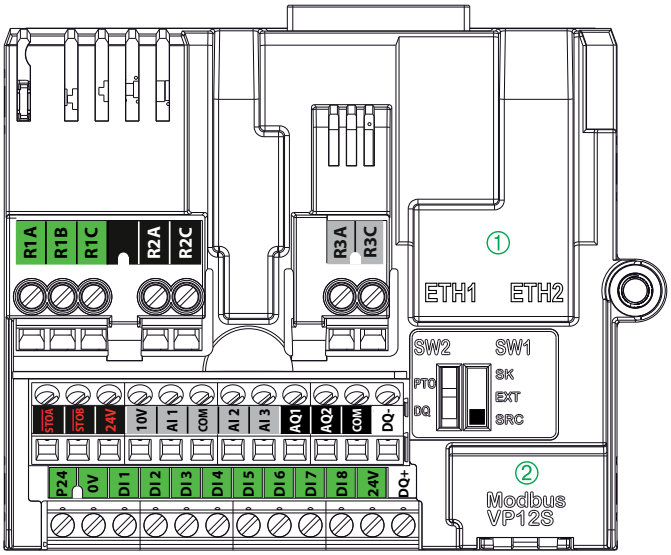

① Ethernet Modbus TCP, ② Serial Modbus

NOTE: Modbus VP12S: This is the standard Modbus serial link marking. VP•S means connector with power supply, where 12 stands for the 12 Vdc supply voltage.

Wiring Characteristics

⚠⚠DANGER

HAZARD OF FIRE OR ELECTRIC SHOCK

- Wire cross sections and tightening torques must comply with the specifications provided in this document.
- If you use flexible multi-wire cables for a connection with a voltage higher than 25 Vac, you must use ring type cable lugs or wire ferrules, depending on the wire gauge and the specified stripping length of the cable.

Failure to follow these instructions will result in death or serious injury.

NOTE: Control terminals can accept 1 or 2 wires.

Wire cross sections and tightening torques

Control Terminals	Relay Output Wire Cross Section		Other Wire Cross Section		Tightening Torque
	Minimum (1)	Maximum	Minimum (1)	Maximum	
	mm² (AWG)	mm² (AWG)	mm² (AWG)	mm² (AWG)	N•m (lb.in)
All terminals	0.75 (18)	1.5 (16)	0.5 (20)	1.5 (16)	0.5 (4.4)

(1) The value corresponds to the minimum permissible cross section of the terminal.

NOTE: Also refer to Control Terminal Electrical data, page 236 .

Control Block Ports

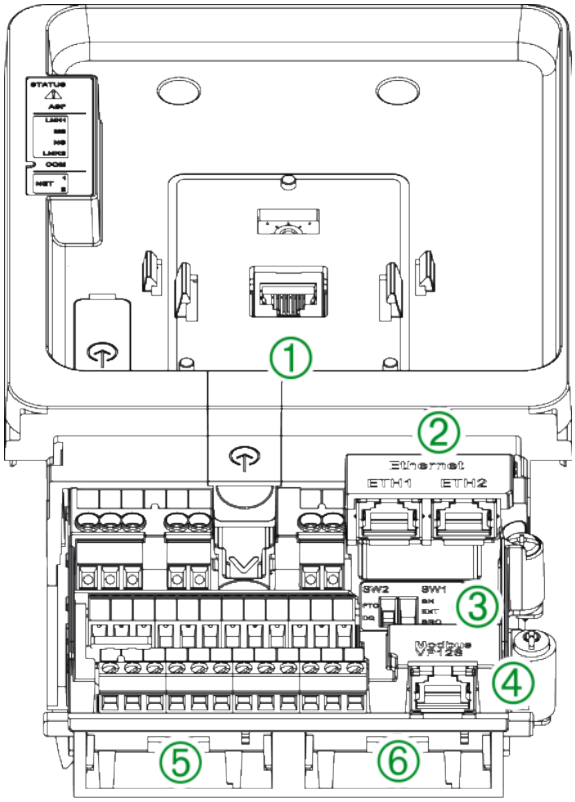

Legend

Marking	Description
①	RJ45 port for Graphic display terminal
②	RJ45 ports for Ethernet embedded
③	Sink-Ext-Source switch, page 172 PTO-DQ switch, page 175
④	RJ45 port for Modbus embedded
⑤	Slot B, for encoder interface, and I/O module
⑥	Slot A, for fieldbus and I/O modules

RJ45 Communication ports

The control block includes 4 RJ45 ports.

They allow to connect:

- A PC
  - Using a commissioning software (SoMove, SoMachine...), to configure and monitor the drive
  - To access the drive webserver
- A SCADA system
- A PLC system
- A Graphic Display terminal, using Modbus protocol
- A Modbus fieldbus

NOTE: Verify that RJ45 cable is not damaged prior to connect it to the product otherwise the power supply of the control could be lost.

NOTE: Do not plug Ethernet cable in Modbus plug or vice versa.

Control Terminals Electrical Data

Characteristics of Terminals

NOTE:

- For a description of the terminal arrangement, refer to Arrangement and Characteristics of Control Terminals and Communication And I/O Ports, page 233
- For factory setting I/O assignment, refer to the ATV900 Programming manual.
- For cable lengths, refer to the table given in the Wiring The control Part section , page 239.

Terminal	Description	I/O Type	Electrical characteristics
R1A	NO contact of relay R1	O	**Output Relay 1** • Minimum switching capacity: 5 mA for 24 Vdc • Maximum switching current on resistive load: 3 A for 250 Vac (OVC II) and 30 Vdc • Maximum switching current on inductive load (cos ϕ ≥0.4 and L/R ≤ 7 ms): 2 A for 250 Vac (OVC II) and 30 Vdc. Inductive load must be equipped with a voltage surge limitation device according to AC or DC operation with total energy dissipation greater than the inductive energy stored in the load. Refer to sections Output Relay with Inductive AC Loads , page 169 and Output Relay with Inductive DC Loads , page 170. • Refresh time: 1 ms ± 0.25 ms • Service life: 100,000 operations at maximum switching current
R1B	NC contact of relay R1	O	
R1C	Common point contact of relay R1	O	
R2A	NO contact of relay R2	O	**Output Relay 2** • Minimum switching capacity: 5 mA for 24 Vdc • Maximum switching current on resistive load: 5 A for 250 Vac (OVC II) and 3A for 30 Vdc • Maximum switching current on inductive load (cos ϕ ≥0.4 and L/R ≤ 7 ms): 2 A for 250 Vac (OVC II) and 30 Vdc. Inductive load must be equipped with a voltage surge limitation device according to AC or DC operation with total energy dissipation greater than the inductive energy stored in the load. Refer to sections Output Relay with Inductive AC Loads , page 169 and Output Relay with Inductive DC Loads , page 170. • Refresh time: 1 ms ± 0.25 ms • Service life: ◦ 100,000 operations at maximum switching current ◦ 1,000,000 operations at 0.5 A
R2C	Common point contact of relay R2	O	
R3A	NO contact of relay R3	O	**Output Relay 3** • Minimum switching capacity: 5 mA for 24 Vdc • Maximum switching current on resistive load: 5 A for 250 Vac (OVC II) and 3 A for 30 Vdc • Maximum switching current on inductive load (cos ϕ ≥0.4 and L/R ≤ 7 ms): 2 A for 250 Vac (OVC II) and 30 Vdc. Inductive load must be equipped with a voltage surge limitation device according to AC or DC operation with total energy dissipation greater than the inductive energy stored in the load. Refer to sections Output Relay with Inductive AC Loads , page 169 and Output Relay with Inductive DC Loads , page 170. • Refresh time: 1 ms ± 0.25 ms • Service life: ◦ 100,000 operations at maximum switching current ◦ 1,000,000 operations at 0.5 A
R3C	Common point contact of relay R3	O	
$\overline{\text{STOA}}$, $\overline{\text{STOB}}$	STO inputs	I	**Safety Function STO Inputs** Refer to the ATV900 Embedded Safety Function manual NHA80947 available on www.se.com

Terminal	Description	I/O Type	Electrical characteristics
24V	Output power supply for digital inputs and safety function STO inputs	O	Use only PELV standard power supply unit. • +24 Vdc • Tolerance: minimum 20.4 Vdc, maximum 27 Vdc • Current: maximum 200 mA for both 24 Vdc terminals • Terminal protected against overload and short-circuit • In Sink Ext position, this supply is powered by external PLC supply
10V	Output supply for Analog input	O	Internal supply for the analog inputs • 10.5 Vdc • Tolerance ± 5 % • Current: maximum 10 mA • Short circuit protected
AI1, AI3	Analog inputs and sensor inputs	I	Software-configurable V/A : voltage or current analog input • Voltage analog input 0...10 Vdc, impedance 31.5 kΩ, • Current analog input X-Y mA by programming X and Y from 0...20 mA, with impedance 250 Ω • Sampling time: 1 ms + 1 ms maximum • Resolution 12 bits • Accuracy: ± 0.6 % for a temperature variation of 60 °C (140 °F) • Linearity ± 0.15 % of maximum value Software-configurable thermal sensors or Water level sensor • **PT100** ◦ 1 thermal sensor mounted in series (configurable by software) (see General Wiring Diagrams, page 166) ◦ Thermal sensor current: 5 mA maximum ◦ Range –20...200 °C (–4...392 °F) ◦ Accuracy ± 4 °C (7.2 °F) for a temperature variation of 60 °C (140 °F). • **PT1000** ◦ 1 thermal sensor mounted in series (configurable by software) (see General Wiring Diagrams, page 166) ◦ Thermal sensor current: 1 mA ◦ Range –20...200 °C (–4...392 °F) ◦ Accuracy ± 4 °C (7.2 °F) for a temperature variation of 60 °C (140 °F). • **KTY84** ◦ 1 thermal sensor mounted in series (configurable by software) (see General Wiring Diagrams, page 166) ◦ Thermal sensor current: 1 mA ◦ Range –20...200 °C (–4...392 °F) ◦ Accuracy ± 4 °C (7.2 °F) for a temperature variation of 60 °C (140 °F). • **PTC** ◦ 1 thermal sensor or 3 thermal sensors or 6 thermal sensors mounted in series (configurable by software) (see General Wiring Diagrams, page 166) ◦ Thermal sensor current: 1 mA ◦ Nominal value: < 1.5 kΩ ◦ Overheat trigger threshold: 2.9 kΩ ± 0.2 kΩ ◦ Overheat reset threshold: 1.575 kΩ ± 75 Ω ◦ Low impedance detection threshold : 50 Ω -10 Ω / +20 Ω ◦ Open circuit threshold : 100 kΩ ± 10kΩ
COM	Analog I/O common	I/O	0 V for Analog outputs
AI2	Analog input	I	Voltage bipolar analog input –10...10 Vdc, impedance 31.5 kΩ • Sampling time: 1 ms + 1 ms maximum • Resolution 12 bits • Accuracy ± 0.6 % for a temperature variation of 60 °C (140 °F). • Linearity ± 0.15 % of maximum value
AQ1	Analog output	O	AQ: Analog output software-configurable for voltage or current • Voltage analog output 0...10 Vdc, minimum. Minimum load impedance 470 Ω,
AQ2	Analog output	O	

Terminal	Description	I/O Type	Electrical characteristics
			• Current analog output X-Y mA by programming X and Y from 0...20 mA, maximum load impedance 500 Ω • Sampling time: 5 ms + 1 ms maximum • Resolution 10 bits • Accuracy: ± 1 % for a temperature variation of 60 °C (140 °F) • Linearity ± 0.2 %
COM	Digital and analog output Common	I/O	0 V for analog outputs and logic output
DQ–	Digital output DQ1	O	Digital output configurable by switch • Insulated • Maximum voltage: 30 Vdc • Maximum current: 100 mA • Frequency range: 0...1 kHz • Positive/Negative logic is managed by user external wiring.
DQ+		O	
DQ+	Pulse output	O	Pulse train output configurable by switch • Open collector not insulated • Maximum voltage: 30 Vdc • Maximum current: 20 mA • Frequency range: 0...30 kHz
P24	External input supply	I	+24 Vdc external input supply • Tolerance: minimum 19 Vdc, maximum 30 Vdc • Maximum current: 0.8 A
0V	0 V	I/O	0 V of P24
DI1-DI8	Digital inputs	I	8 programmable logic inputs 24 Vdc, comply with IEC/EN 61131-2 logic type 1 • Positive logic (Source): State 0 if ≤ 5 Vdc or logic input not wired, state 1 if ≥ 11 Vdc • Negative logic (Sink):State 0 if ≥ 16 Vdc or logic input not wired, state 1 if ≤ 10 Vdc • Impedance 3.5 kΩ • Maximum voltage: 30 Vdc • Sampling time: 2 ms + 0.5 ms maximum Multiple assignment makes it possible to configure several functions on one input (example: DI1 assigned to forward and preset speed 2, DI3 assigned to reverse and preset speed 3).
DI7-DI8	Pulse inputs	I	Programmable Pulse input • Comply with level 1 PLC, IEC 65A-68 standard • State 0 if < 0.6 Vdc, state 1 if > 2.5 Vdc • Pulse counter 0...30 kHz • Frequency range: 0…30 kHz • Cyclic ratio: 50 % ± 10 % • Maximum input voltage 30 Vdc, < 10 mA • Sampling time: 5 ms + 1 ms maximum

Wiring The Control Part

Preliminary Instructions

⚠⚠DANGER

HAZARD OF ELECTRIC SHOCK, EXPLOSION OR ARC FLASH

Read and understand the instructions in **Product Related Information** chapter before performing any procedure in this chapter.

Failure to follow these instructions will result in death or serious injury.

⚠⚠DANGER

ELECTRIC SHOCK CAUSED BY INCORRECT POWER SUPPLY UNIT

The +24VDC supply voltage is connected with many exposed signal connections in the device.

- Use a power supply unit that meets the PELV (Protective Extra Low Voltage) requirements.

Failure to follow these instructions will result in death or serious injury.

⚠WARNING

INCORRECT WIRING

- Only PELV circuits are allowed to be connected on the control part (except relays R1, R2 and R3).

Failure to follow these instructions can result in death, serious injury, or equipment damage.

NOTICE

INCORRECT VOLTAGE

Supply the digital inputs with 24 Vdc only.

Failure to follow these instructions can result in equipment damage.

Control Cable Lengths

Control terminal Input/Output Cables		Maximum wires length depending on cable cross section (*)	
		1.5 mm² / AWG16	0.5 mm² / AWG20
Analog inputs AI1, AI3	voltage: 0 - 10 V	30 m / 98 ft	30 m / 98 ft
	current: 0 - 20 mA	3000 m / 9840 ft	1000 m / 3280 ft
	PT100	30 m / 98 ft	10 m / 32 ft
	PT1000	300 m / 984 ft	100 m / 328 ft
	KTY84	300 m / 984 ft	100 m / 328 ft
	PTC	300 m / 984 ft	100 m / 328 ft
Analog input AI2	voltage: 0 - 10 V	30 m / 98 ft	30 m / 98 ft
Output supply 10V		30 m / 98 ft	30 m / 98 ft
Analog outputs AQ1, AQ2	voltage: 0 - 10 V	30 m / 98 ft	10 m / 32 ft

Control terminal Input/Output Cables		Maximum wires length depending on cable cross section (*)	
		1.5 mm² / AWG16	0.5 mm² / AWG20
	current: 0 - 20 mA	3000 m / 9840 ft	1000 m / 3280 ft
Output power supply 24V	200 mA max.	300 m / 984 ft	100 m / 328 ft
Digital inputs DI1...DI8		3000 m / 9840 ft	1000 m / 3280 ft
Safe Torque Off inputs STOA, STOB		3000 m / 9840 ft	1000 m / 3280 ft
Digital output DQ +, DQ-	100 mA max.	600 m / 1968 ft	200 m / 656 ft
Control power supply input P24	24 V input	120 m / 390 ft	40 m / 130 ft
(*) Shorter cable lengths or smaller cable cross sections can be adjusted using linear interpolation with the values listed in the table. For example: maximum 10 m / 32 ft with 0.5 mm² / AWG20 and maximum 30 m / 98 ft with 1.5 mm² / AWG16 listed in the table, is equivalent to maximum 20 m / 65 ft with 1 mm² / AWG17.			

Optional Module Installation and Wiring

To help ensure correct wiring of the control part, apply the following instructions to install and connect a module to be wired

Step	Action
1	Insert the module in the slot A or B, page 234.
2	Insert the cable in the cabling plate, according to the outlined locations. The breakable cut out is used for fieldbus cables.
3	Connect the cable to the module

(Procedure applicable for wall mounting product)

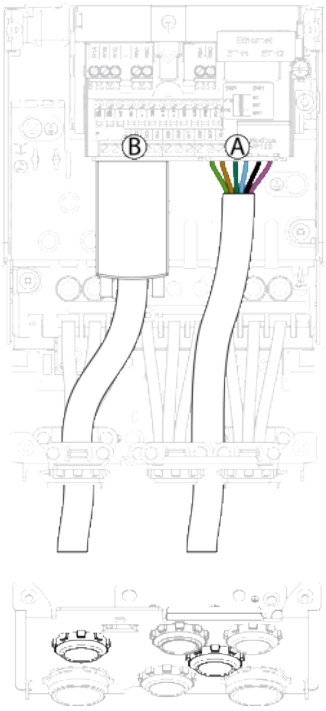

NOTE: Cabling plate shown is for frame size 2. Other cabling plates look slightly differs from this one.

NOTE: For Floor standing products route the option cables into the integrated control cable conduit.

I/O Relay Module Installation and Wiring

To help ensure correct wiring of the control part, apply the following instructions to install an I/O relay module

Step	Action
1	Insert the I/O relay module in an option slot
2	Push the module into its location and keep access to the module terminal screws
3	Insert the I/O cable in the cabling plate, according to the outlined location
4	Wire the I/O relay module
5	Push again the module to its final position.

(Procedure applicable for wall mounting product)

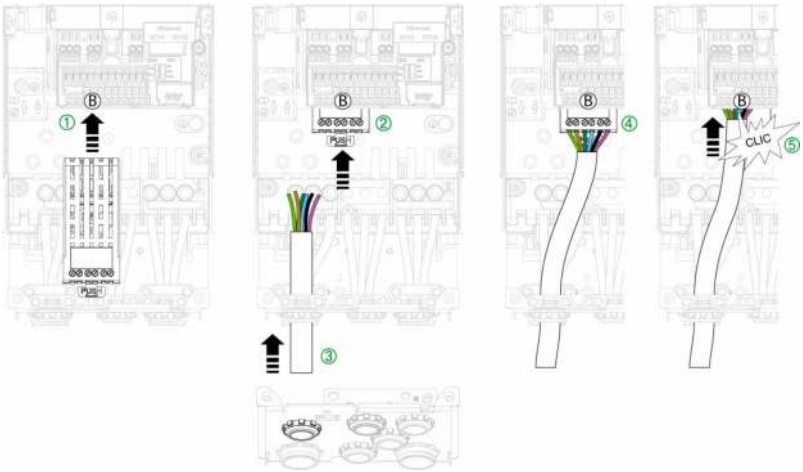

NOTE: Cabling plate shown is for frame size 2. Other cabling plates look slightly differs from this one.

NOTE: For Floor standing products route the option cables into the integrated control cable conduit.

Encoder Interface Module Installation and Wiring

To help ensure correct wiring of the control part, apply the following instructions to install the encoder interface module

Step	Action
1	Insert the encoder interface module in the slot B, page 234 and push it to its final position until you ear a “click” sound
2	Insert the cable in the cabling plate, according to the outlined location.
3	Wire the SUB-D connector
4	Plug the SUB-D connector on the option module

(Procedure applicable for wall mounting product)

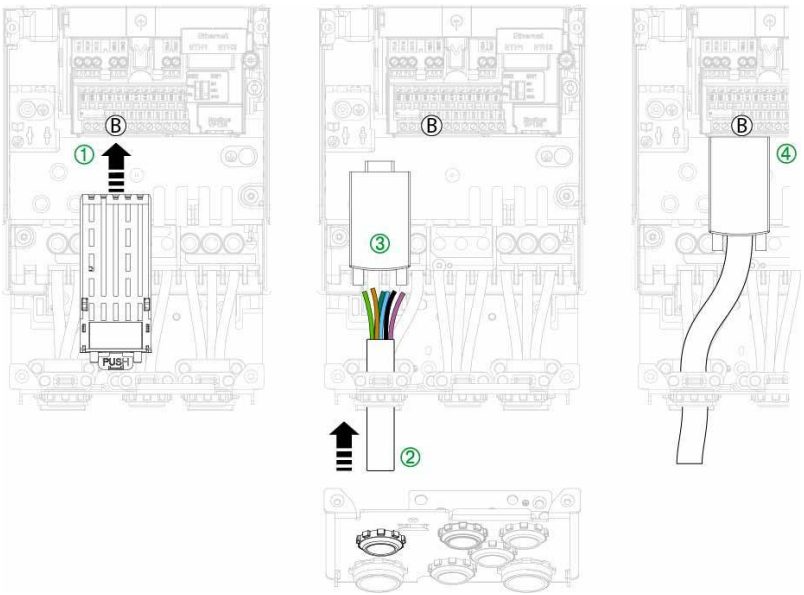

NOTE: Cabling plate shown is for frame size 2. Other cabling plates look slightly differs from this one.

NOTE: For Floor standing products route the option cables into the integrated control cable conduit.

Encoder Cable Shielding

To improve EMC performance:

- Connect the shielding to the encoder on the motor side.
- Ensure the shielding continuity of the cable between the drive and the encoder.
- On the drive side, perform the wiring of the optional digital encoder interface module as described on the figure below:

Example for drive frame sizes 1, 2, 3, 3S

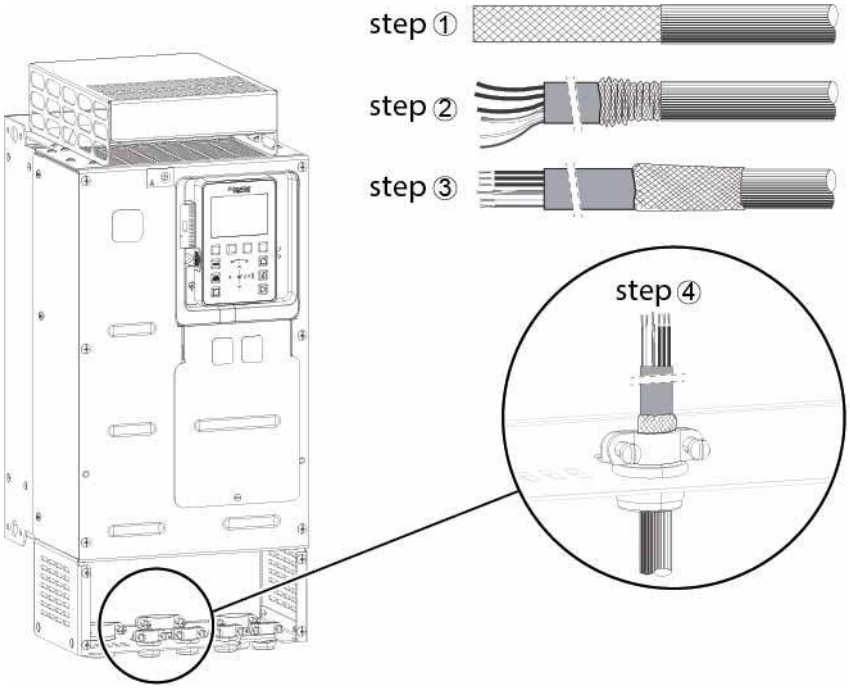

Example for drive frame sizes 4, 5, 5S, 5Y, 6, 7 and FSP

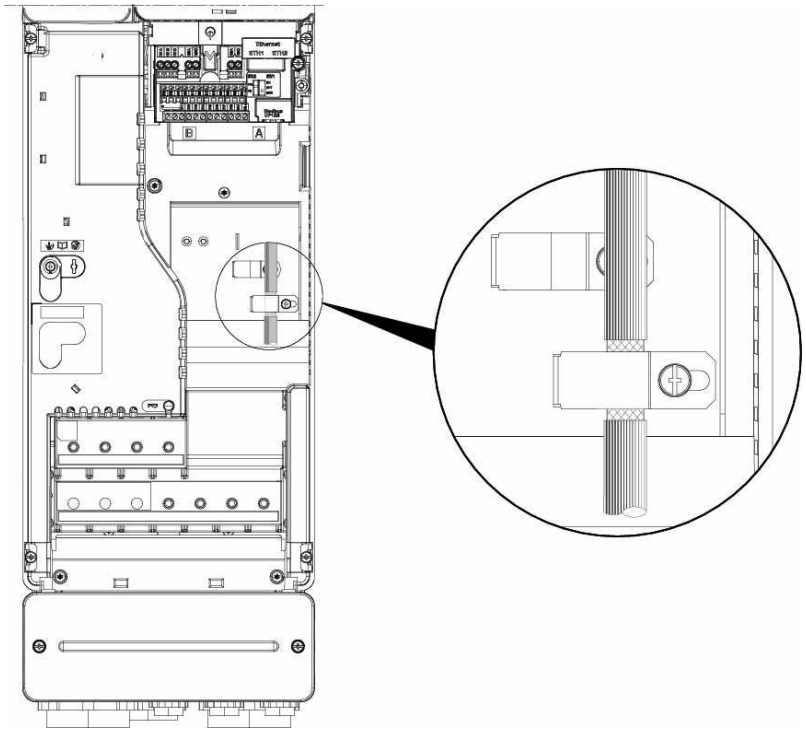

Example for drive frame size 3Y

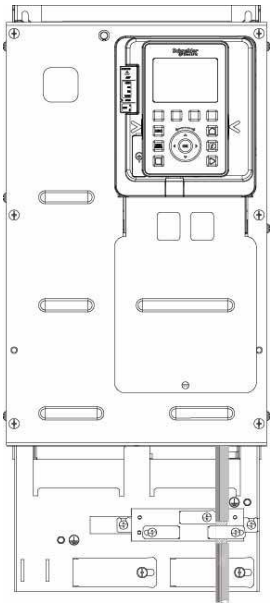

Special Case of PROFIBUS Fieldbus Module Installation and Wiring on Frame Size 1 Drives

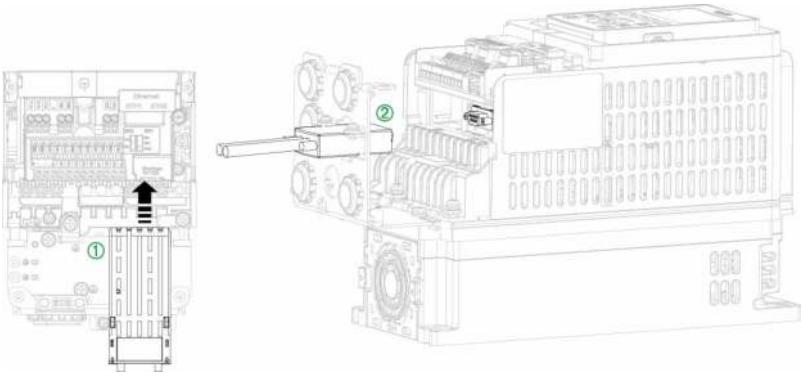

To help ensure correct wiring of the control part, apply the following instructions to install the PROFIBUS fieldbus module on Frame size 1 drives

Step	Action
1	Insert the module in its slot
2	Insert the SUB-D connector in the cut out of the cabling plate
3	Plug the SUB-D connector to the module

Control Block Wiring

To help ensure correct wiring of the control part, apply the following instructions to wire the control block terminals

Step	Action
1	Wire the P24, 0V, the digital inputs (DI1...DI8), the 24V and DQ+ terminals
2	Wire the safety outputs STOA, STOB, the 24V, the 10V, the analog inputs (AI1...AI3), the COM, the analog outputs (AQ1...AQ2), the COM and DQ- terminals
3	Wire the Relay outputs

(Procedure applicable for wall mounting product, for 200...240 V and 380...480 V Supply Mains)

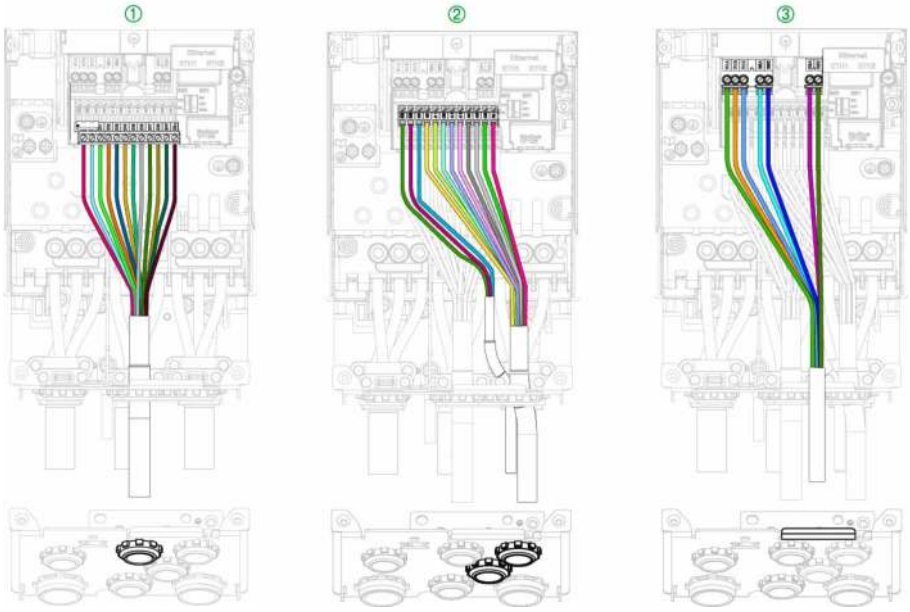

NOTE: Cabling plate shown is for frame size 2. Other cabling plates look slightly differs from this one.

NOTE: For Floor standing products route the control wires into the integrated control cable conduit.

(Procedure applicable for wall mounting product, for 600 V Supply Mains)

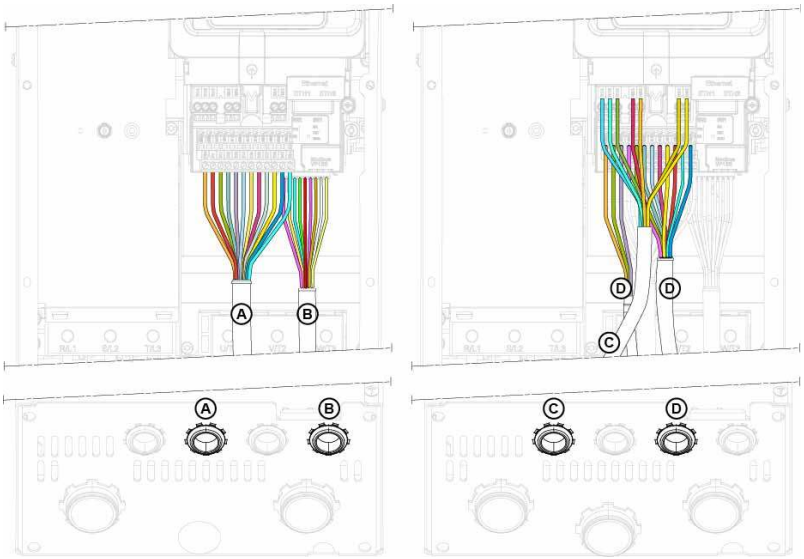

Ethernet Cable Path

(Wiring applicable for wall mounting product)

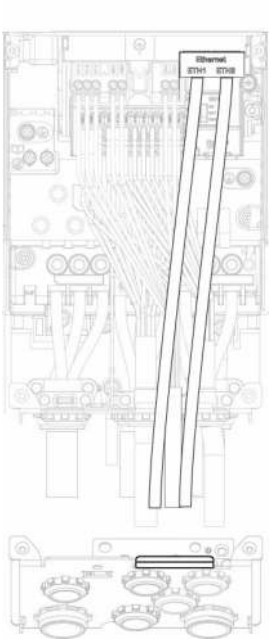

NOTE: Cabling plate shown is for frame size 2. Other cabling plates look slightly differs from this one.

NOTE: For Floor standing products route the control wires into the integrated control cable conduit.

Control Cables Path - Drives Without Conduit Box

Example: cable path for frame size 3Y for 500-690 V mains voltage

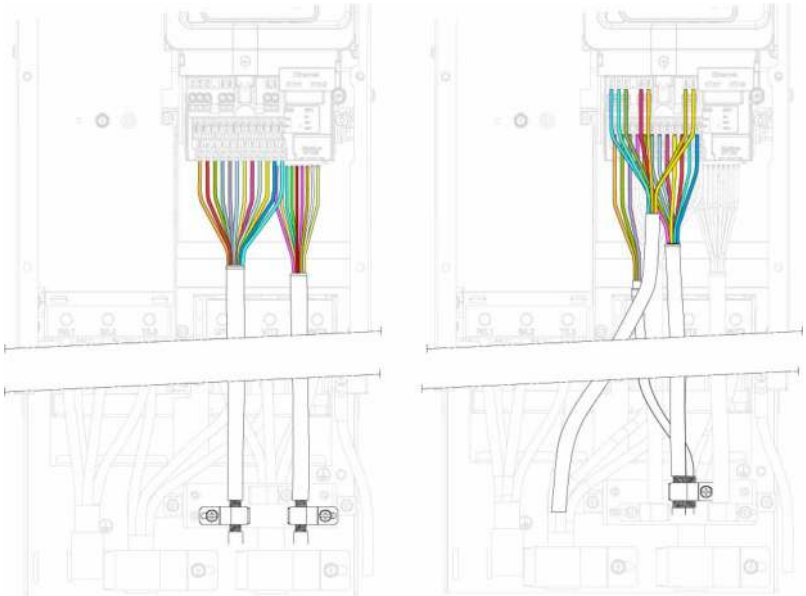

Example: cable path for frame size 5Y for 500-690 V mains voltage

Checking Installation

What's in This Part

Check List Before Switching On 249

Check List Before Switching On

The safety function STO (Safe Torque Off) does not remove power from the DC bus. The safety function STO only removes power to the motor. The DC bus voltage and the mains voltage to the drive are still present.

⚠⚠DANGER

HAZARD OF ELECTRIC SHOCK

- Do not use the safety function STO for any other purposes than its intended function.
- Use an appropriate switch, that is not part of the circuit of the safety function STO, to disconnect the product from the mains power.

Failure to follow these instructions will result in death or serious injury.

Unsuitable settings or unsuitable data or unsuitable wiring may trigger unintended movements, trigger signals, damage parts and disable monitoring functions.

⚠WARNING

UNANTICIPATED EQUIPMENT OPERATION

- Only start the system if there are no persons or obstructions in the zone of operation.
- Verify that a functioning emergency stop push-button is within reach of all persons involved in the operation.
- Do not operate the product with unknown settings or data.
- Verify that the wiring is appropriate for the settings.
- Never modify a parameter unless you fully understand the parameter and all effects of the modification.
- When commissioning, carefully run tests for all operating states, operating conditions and potential error situations.
- Anticipate movements in unintended directions or oscillation of the motor.

Failure to follow these instructions can result in death, serious injury, or equipment damage.

If the power stage is disabled unintentionally, for example as a result of power outage, errors or functions, there is a possibility that the motor is no longer decelerated in a controlled way.

⚠WARNING

UNANTICIPATED EQUIPMENT OPERATION

Verify that movements without braking effect does not result in unsafe conditions.

Failure to follow these instructions can result in death, serious injury, or equipment damage.

Mechanical Installation

Verify the mechanical installation of the entire drive system:

Step	Action	✓
1	Does the installation meet the specified distance requirements?	
2	Did you tighten all fastening screws to the specified tightening torque?	

Electrical installation

Verify the electrical connections and the cabling:

Step	Action	✓
1	Did you connect all protective ground conductors?	
2	The correct tightening of the screws may be altered during assembly and wiring phases of the drive. Verify and adjust the tightening of all terminal screws to the specified nominal torque.	
3	Do all fuses and circuit breaker have the correct rating; are the fuses of the specified type? Refer to the information provided in the Altivar Process ATV900 Getting Started Annex (SCCR), catalog number: NHA61583 for UL/CSA compliance and also in the catalog for IEC compliance.	
4	Did you connect or insulate all wires at the cable ends?	
5	Did you properly separate and insulate the control and power wiring?	
6	Did you properly connect and install all cables and connectors?	
7	Did you properly connect the signal wires?	
8	Are the required shield connections EMC-compliant?	
9	Did you take all measures for EMC compliance?	
10	On floor standing products, verify that internal circuit breaker is closed.	

Covers And Seals

Verify that all devices, doors and covers of cabinet are properly installed to meet the required degree of protection.

Maintenance

What's in This Part

Scheduled Servicing....252
Long-term Storage....254
Decommissioning....255
Additional Support....256

Scheduled Servicing

Servicing

⚠⚠DANGER

HAZARD OF ELECTRIC SHOCK, EXPLOSION OR ARC FLASH

Read and understand the instructions in **Product Related Information** chapter before performing any procedure in this chapter.

Failure to follow these instructions will result in death or serious injury.

The temperature of the products described in this manual may exceed 80 °C (176 °F) during operation.

⚠WARNING

HOT SURFACES

- Ensure that any contact with hot surfaces is avoided.
- Do not allow flammable or heat-sensitive parts in the immediate vicinity of hot surfaces.
- Verify that the product has sufficiently cooled down before handling it.
- Verify that the heat dissipation is sufficient by performing a test run under maximum load conditions.

Failure to follow these instructions can result in death, serious injury, or equipment damage.

⚠WARNING

INSUFFICIENT MAINTENANCE

Verify that the maintenance activities described below are performed at the specified intervals.

Failure to follow these instructions can result in death, serious injury, or equipment damage.

Adherence to the environmental conditions must be ensured during operation of the device. In addition, during maintenance, verify and, if appropriate, correct all factors that may have an impact on the environmental conditions.

Maintenance Activities

	Part concerned	Activity	Interval (1)
Overall condition	All parts such as housing, HMI, control block, connections, etc.	Perform a visual inspection	At least every year
Corrosion	Terminals, connectors, screws, EMC plate	Inspect and clean if required	
Dust	Terminals, fans, cabinet air inlets and air outlets, air filters of cabinet	Inspect and clean if required	
	Drives filter mats Floor standing	Inspect	At least every year
		Change	At least every 4 years
Cooling	Wall mounting drives fan	Verify the fan operation	At least every year
		Replace the fan, see catalog and the instructions sheets on www.se.com.	After 3 to 5 years, depending on the operating conditions
	Floor standing drives fan for power part and enclosure door fan	Replace the fans, see catalog and the instructions sheets on www.se.com.	Every 35000 operating hours or every 6 years
Fastening	All screws for electrical and mechanical connections	Verify tightening torques	At least every year
(1) Maximum maintenance intervals from the date of commissioning. Reduce the intervals between maintenance to adapt maintenance to the environmental conditions, the operating conditions of the drive, and to any other factor that may influence the operation and/ or maintenance requirements of the drive.			

NOTE: The fan operation depends on the drive thermal state. The drive may be running and the fan not.

Fans may continue to run for a certain period of time even after power to the product has been disconnected.

⚠WARNING

RUNNING FANS

Verify that fans have come to a complete standstill before handling them.

Failure to follow these instructions can result in death, serious injury, or equipment damage.

Diagnostic And Troubleshooting

Refer to the ATV900 Programming manual available on www.se.com.

Spares and repairs

Serviceable products:

Please refer to your Customer Care Center on www.se.com/CCC.

Long-term Storage

Capacitor Reforming

If the drive was not connected to mains for an extended period of time, the capacitors must be restored to their full performance before the motor is started.

NOTICE

REDUCED CAPACITOR PERFORMANCE

- Apply mains voltage to the drive for one hour before starting the motor if the drive has not been connected to mains for the specified periods of time.(1)
- Verify that no Run command can be applied before the period of one hour has elapsed.
- Verify the date of manufacture if the drive is commissioned for the first time and run the specified procedure if the date of manufacture is more than 12 months in the past.

Failure to follow these instructions can result in equipment damage.

(1) Period of time:

- 12 months at a maximum storage temperature of +50°C (+122°F)
- 24 months at a maximum storage temperature of +45°C (+113°F)
- 36 months at a maximum storage temperature of +40°C (+104°F)

If the specified procedure cannot be performed without a Run command because of internal mains contactor control, perform this procedure with the power stage enabled, but the motor being at a standstill so that there is no appreciable mains current in the capacitors.

Decommissioning

Uninstall the Product

Observe the following procedure when uninstalling the product.

- Switch off all supply voltage. Verify that no voltages are present - refer to the Verifying the Absence of Voltage, page 17.
- Remove all connection cables.
- Uninstall the product.

End of Life

The components of the product consist of different materials which can be recycled and which must be disposed of separately.

- Dispose of the packaging in compliance with all applicable regulations.
- Dispose of the product in compliance with all applicable regulations.

Refer to the Environmental Data Program for information and documents on environmental protection such as EoLI (End of Life instruction).

Additional Support

Customer Care Center

For additional support, you can contact our Customer Care Center on:

www.se.com/CCC.

Glossary

A

Abbreviations:

Req. = Required

Opt. = Optional

AC:

Alternating Current

Adjustment parameter: A parameter always accessible as **[Access Level]**.

C

Configuration Parameter: A parameter affects by the operating states of the machine as**[Motor Nom Current]**.

D

DC:

Direct Current

E

ELV:

Extra-Low Voltage. For more information: IEC 60449

Error :

Discrepancy between a detected (computed, measured, or signaled) value or condition and the specified or theoretically correct value or condition.

F

Factory setting:

Machine status in factory settings when the product was shipped.

Fault Reset:

A function used to restore the drive to an operational state after a detected error is cleared by removing the cause of the error so that the error is no longer active.

Fault:

Fault is an operating state. If the monitoring functions detect an error, a transition to this operating state is triggered, depending on the error class. A "Fault reset" is required to exit this operating state after the cause of the detected error has been removed. Further information can be found in the pertinent standards such as IEC 61800-7, ODVA Common Industrial Protocol (CIP).

G

GP:

General-Purpose

L

L/R:

Time constant equal to the quotient of inductance value (L) over the resistance value (R).

N

NC contact:

Normally Closed contact

NO contact:

Normally Open contact

O

OEM:

Original Equipment Manufacturer

OVCII:

Overvoltage Category II, according IEC 61800-5-1

P

PA/+:

DC bus terminal

PC/-:

DC bus terminal

PELV:

Protective Extra Low Voltage, low voltage with isolation. For more information: IEC 60364-4-41.

PLC:

Programmable logic controller.

Power stage:

The power stage controls the motor. The power stage generates current for controlling the motor.

PTC:

Positive Temperature Coefficient. PTC thermistor probes integrated in the motor or application to measure its temperature

PWM:

Pulse Width Modulation.

R

REACh:

Registration, Evaluation, Authorisation and restriction of Chemicals regulation

RoHS:

Restriction of Hazardous Substances

S

SCPD:

Short-Circuit Protective Device

STO:

Safe Torque Off: No power that could cause torque or force is supplied to the motor

T

TVS Diode:

Transient Voltage Suppression Diode

V

VHP:

Very High Horse Power (> 800 kW)

VSD:

Variable Speed Drive

W

Warning:

If the term is used outside the context of safety instructions, a warning alerts to a potential error that was detected by a monitoring function. A warning does not cause a transition of the operating state.

Schneider Electric
35 rue Joseph Monier
92500 Rueil Malmaison
France

+ 33 (0) 1 41 29 70 00

www.se.com

As standards, specifications, and design change from time to time, please ask for confirmation of the information given in this publication.

© 2017 – 2025 Schneider Electric. All rights reserved.

NHA80932.11 – 06/2025