Product data sheet

Specifications

Variable Speed Drive, Altivar Process ATV900, ATV930, 130kW, 400 to 480V, without braking unit, IP00 [TAA, BABA]

ATV930C13N4CUS

Product availability: Stock - Normally stocked in distribution facility

Main

Range of Product	Altivar Process ATV900
Product Specific Application	Process for industrial
Product or Component Type	Variable speed drive
Variant	Without braking chopper Standard version
Device Application	Industrial Application
Product destination	Synchronous motors Asynchronous motors
Phase	3 phase
Mounting Mode	Wall mount
Continuous output current	250 A 2.5 kHz normal duty 211 A 2.5 kHz heavy duty
Communication Port Protocol	Modbus TCP EtherNet/IP Modbus serial
option module	Slot A communication module Profibus DP V1 Slot A communication module PROFINET Slot A communication module DeviceNet Slot A communication module EtherCAT Slot A communication module CANopen daisy chain RJ45 Slot A communication module CANopen SUB-D 9 Slot A communication module CANopen screw terminals Slot A/slot B/slot C digital and analog I/O extension module Slot A/slot B/slot C output relay extension module Slot B 5/12 V digital encoder interface module Slot B analog encoder interface module Slot B resolver encoder interface module communication module Ethernet Powerlink
[Us] rated supply voltage	380...480 V - 15...10 %
[Us] rated supply voltage	380...480 V
Relative symmetric mains voltage tolerance	10 %
Relative symmetric network frequency tolerance	5 %
nominal output current	250.0 A
Motor power kW	132.0 kW normal duty 110.0 kW heavy duty
EMC filter	Integrated With EMC plate option
IP degree of protection	IP21
Degree of protection	UL type 1

Price is “List Price” and may be subject to a trade discount – check with your local distributor or retailer for actual price.

Disclaimer: This documentation is not intended as a substitute for and is not to be used for determining suitability or reliability of these products for specific user applications

Complementary

Electrical connection	Control screw terminal 0.5...1.5 mm² 20 AWG...16 AWG Line side screw terminal 2 x 70...3 x 120 mm² 2/0 AWG...300 kcmil Motor screw terminal 2 x 70...3 x 120 mm² 2/0 AWG...300 kcmil DC bus screw terminal 2 x 95...3 x 120 mm² 2/0 AWG...300 kcmil
Transmission Rate	10/100 Mbit/s Ethernet IP/Modbus TCP 4.8, 9.6, 19.2, 38.4 kbit/s Modbus serial
Exchange mode	Half duplex, full duplex, autonegotiation Ethernet IP/Modbus TCP
Data format	8 bits, configurable odd, even or no parity Modbus serial
Type of polarization	No impedance Modbus serial
Number of addresses	1…247 Modbus serial
Supply	External supply for digital inputs 24 V DC 19…30 V), <1.25 mA overload and short-circuit protection Internal supply for reference potentiometer (1 to 10 kOhm) 10.5 V DC +/- 5 %, <10 mA overload and short-circuit protection Internal supply for digital inputs and STO 24 V DC 21…27 V), <200 mA overload and short-circuit protection
Local signalling	Local diagnostic: 3 LED (mono/dual colour) Embedded communication status: 5 LED (dual colour) Communication module status: 2 LED (dual colour) Presence of voltage: 1 LED (red)
Input compatibility	DI1...DI8 discrete input level 1 PLC IEC 61131-2 DI7, DI8 pulse input level 1 PLC IEC 65A-68 STOA, STOB discrete input level 1 PLC IEC 61131-2
Discrete input logic	Positive logic (source) DI1...DI8), < 5 V, > 11 V Negative logic (sink) DI1...DI8), > 16 V, < 10 V Positive logic (source) DI7, DI8), < 0.6 V, > 2.5 V Positive logic (source) STOA, STOB), < 5 V, > 11 V
Sampling duration	2 ms +/- 0.5 ms DI1...DI8) - discrete input 5 ms +/- 1 ms DI7, DI8) - pulse input 1 ms +/- 1 ms AI1, AI2, AI3) - analog input 5 ms +/- 1 ms AQ1, AQ2) - analog output
Accuracy	+/- 0.6 % AI1, AI2, AI3 for a temperature variation 60 °C analog input +/- 1 % AQ1, AQ2 for a temperature variation 60 °C analog output
Linearity error	AI1, AI2, AI3 +/- 0.15 % of maximum value analog input AQ1, AQ2 +/- 0.2 % analog output
Refresh time	Relay output R1, R2, R3)5 ms +/- 0.5 ms)
Isolation	Between power and control terminals
Discrete input number	10
Discrete input type	DI1...DI8 programmable, 24 V DC <= 30 V)3.5 kOhm DI7, DI8 programmable as pulse input 0…30 kHz, 24 V DC <= 30 V) STOA, STOB safe torque off, 24 V DC <= 30 V)> 2.2 kOhm
Discrete output number	2
Discrete output type	Logic output DQ+ 0…1 kHz <= 30 V DC 100 mA Programmable as pulse output DQ+ 0…30 kHz <= 30 V DC 20 mA Logic output DQ- 0…1 kHz <= 30 V DC 100 mA
Analogue input number	3
Analogue input type	AI1, AI2, AI3 software-configurable voltage 0...10 V DC 30 kOhm 12 bits AI1, AI2, AI3 software-configurable current 0...20 mA/4...20 mA 250 Ohm 12 bits
Analogue output number	2
Analogue output type	Software-configurable voltage AQ1, AQ2 0...10 V DC 470 Ohm 10 bits Software-configurable current AQ1, AQ2 0...20 mA 500 Ohm 10 bits
Relay output number	3

Relay output type	Configurable relay logic R1 fault relay NO/NC 100000 cycles Configurable relay logic R2 sequence relay NO 1000000 cycles Configurable relay logic R3 sequence relay NO 1000000 cycles
Maximum switching current	Relay output R1 resistive, cos phi = 1 3 A 250 V AC Relay output R1 resistive, cos phi = 1 3 A 30 V DC Relay output R1 inductive, cos phi = 0.4 7 ms 2 A 250 V AC Relay output R1 inductive, cos phi = 0.4 7 ms 2 A 30 V DC Relay output R2, R3 resistive, cos phi = 1 5 A 250 V AC Relay output R2, R3 resistive, cos phi = 1 5 A 30 V DC Relay output R2, R3 inductive, cos phi = 0.4 7 ms 2 A 250 V AC Relay output R2, R3 inductive, cos phi = 0.4 7 ms 2 A 30 V DC
Minimum switching current	Relay output R1, R2, R3 5 mA 24 V DC
Discrete input logic	16 preset speeds
Physical interface	Ethernet 2-wire RS 485
Connector Type	2 RJ45 1 RJ45
Method of access	Slave Modbus TCP
Transmission Rate	10, 100 Mbits 4.8 kbps 9600 bit/s 19200 bit/s
Transmission frame	RTU
Number of addresses	1…247
Data format	8 bits, configurable odd, even or no parity
Type of polarization	No impedance
4 quadrant operation possible	False
Asynchronous motor control profile	Variable torque standard Optimized torque mode Constant torque standard
Synchronous motor control profile	Permanent magnet motor Synchronous reluctance motor
Maximum output frequency	599 Hz
Acceleration and deceleration ramps	Linear adjustable separately from 0.01...9999 s
Motor slip compensation	Adjustable Automatic whatever the load Can be suppressed Not available in permanent magnet motor law
Switching frequency	1...8 kHz adjustable 2.5...8 kHz with derating factor
Nominal switching frequency	2.5 kHz
Braking to standstill	By DC injection
Brake chopper integrated	False
Line current	237.0 A 380 V normal duty) 201.0 A 380 V heavy duty) 213.0 A 480 V normal duty) 165.0 A 480 V heavy duty)
Maximum Input Current per Phase	237.0 A
Maximum output voltage	480.0 V
Apparent power	161.4 kVA 480 V normal duty) 121.8 kVA 480 V heavy duty)
Maximum transient current	300 A 60 s normal duty) 317 A 60 s heavy duty)

Network Frequency	50-60 Hz
Prospective line Isc	50 kA
Base load current at high overload	211.0 A
Base load current at low overload	250.0 A
Power dissipation in W	Forced convection 2999 W 380 V 2.5 kHz Natural convection 358 W 380 V 2.5 kHz
With safety function Safely Limited Speed (SLS)	True
With safety function Safe brake management (SBC/SBT)	True
With safety function Safe Operating Stop (SOS)	False
With safety function Safe Position (SP)	False
With safety function Safe programmable logic	False
With safety function Safe Speed Monitor (SSM)	False
With safety function Safe Stop 1 (SS1)	True
With sft fct Safe Stop 2 (SS2)	False
With safety function Safe torque off (STO)	True
With safety function Safely Limited Position (SLP)	False
With safety function Safe Direction (SDI)	False
Protection type	Thermal protection motor Safe torque off motor Motor phase break motor Thermal protection drive Safe torque off drive Overheating drive Overcurrent between output phases and earth drive Overload of output voltage drive Short-circuit protection drive Motor phase break drive Overvoltages on the DC bus drive Line supply overvoltage drive Line supply undervoltage drive Line supply phase loss drive Overspeed drive Break on the control circuit drive
Quantity per Set	1
Width	12.6 in (320 mm)
Height	33.5 in (852 mm)
Depth	15.5 in (393 mm)
Product Weight	180.8 lb(US) (82 kg)

Environment

Insulation resistance	> 1 MOhm 500 V DC for 1 minute to earth
Noise level	69.9 dB 86/188/EEC
Vibration resistance	1.5 mm peak to peak (f= 2…13 Hz) conforming to IEC 60068-2-6 1 gn (f= 13…200 Hz) conforming to IEC 60068-2-6
Shock resistance	15 gn 11 ms IEC 60068-2-27
Environmental characteristic	Chemical pollution resistance class 3C3 IEC 60721-3-3 Dust pollution resistance class 3S3 IEC 60721-3-3
Relative humidity	5…95 % without condensation IEC 60068-2-3

Ambient air temperature for operation	5…122 °F (-15…50 °C) (without derating) 122…140 °F (50…60 °C) (with derating factor)
Operating altitude	<= 3280.84 ft (1000 m) without derating 1000...4800 m with current derating 1 % per 100 m
Operating position	Vertical +/- 10 degree
Product Certifications	CSA TÜV UL
Marking	CE
Standards	UL 508C IEC 61800-3 IEC 61800-5-1 IEC 61000-3-12 IEC 60721-3 IEC 61508 IEC 13849-1
Maximum THDI	<48 % full load IEC 61000-3-12
Assembly style	Enclosed
Electromagnetic compatibility	Electrostatic discharge immunity test level 3 conforming to IEC 61000-4-2 Radiated radio-frequency electromagnetic field immunity test level 3 conforming to IEC 61000-4-3 Electrical fast transient/burst immunity test level 4 conforming to IEC 61000-4-4 1.2/50 µs - 8/20 µs surge immunity test level 3 conforming to IEC 61000-4-5 Conducted radio-frequency immunity test level 3 conforming to IEC 61000-4-6
Environmental class (during operation)	Class 3C3 according to IEC 60721-3-3 Class 3S3 according to IEC 60721-3-3
Maximum acceleration under shock impact (during operation)	150 m/s² at 11 ms
Maximum acceleration under vibrational stress (during operation)	10 m/s² at 13...200 Hz
Maximum deflection under vibratory load (during operation)	1.5 mm at 2...13 Hz
Permitted relative humidity (during operation)	Class 3K5 according to EN 60721-3
Volume of cooling air	158506.07 Gal/hr(US) (600 m3/h)
Overvoltage category	III
Regulation loop	Adjustable PID regulator
Noise level	69.9 dB
Pollution degree	2
Ambient air transport temperature	-40…158 °F (-40…70 °C)
Ambient Air Temperature for Storage	-40…158 °F (-40…70 °C)

Ordering and shipping details

Category	US1CP4E22277
Discount Schedule	CP4E
GTIN	3606487208204
Returnability	Yes
Country of origin	US

Packing Units

Unit Type of Package 1	PCE
Nbr. of units in pkg.	1

Package 1 Height	26.0 in (66 cm)
Package 1 Width	18.9 in (48 cm)
Package 1 Length	40.6 in (103 cm)
Package weight(Lbs)	197.5 lb(US) (89.6 kg)

Compliance

Compliance	TAA Compliant BABA Compliant BAA Compliant via COTS

Environmental Data

Schneider Electric aims to achieve Net Zero status by 2050 through supply chain partnerships, lower impact materials, and circularity via our ongoing “Use Better, Use Longer, Use Again” campaign to extend product lifetimes and recyclability.

Environmental Data explained

How we assess product sustainability

Environmental footprint

Total lifecycle Carbon footprint	**39 369 kg CO2 eq.**
Carbon footprint of the manufacturing phase [A1 to A3]	**708 kg CO2 eq.**
Carbon footprint of the distribution phase [A4]	**18 kg CO2 eq.**
Carbon footprint of the installation phase [A5]	**23 kg CO2 eq.**
Carbon footprint of the use phase [B2, B3, B4, B6]	**38 509 kg CO2 eq.**
Carbon footprint of the end-of-life phase [C1 to C4]	**111 kg CO2 eq.**
Environmental Disclosure	Product Environmental Profile

Use Better

Materials and Substances

Average percentage of recycled plastic content	**1 %**
Average percentage of ASI certified metals	**27 %**
Packaging made with recycled cardboard	**Yes**
Packaging without single use plastic	**No**
SCIP Number	**3a1ae1b7-96ff-4a20-9804-40393f13630f**
EU RoHS Directive	Compliant By Exemption
REACh Regulation	Reference contains Substances of Very High Concern above the threshold
California proposition 65	**WARNING: This product can expose you to chemicals including: Lead and lead compounds, which is known to the State of California to cause cancer and birth defects or other reproductive harm. For more information go to www.P65Warnings.ca.gov**

Use Longer

Lifetime extension

Repair	**No**

Use Again

Repack and remanufacture

Recyclability potential, in %	**82**
Circularity Profile	End of Life Information
Removable battery	**Yes**
Take-back	**No**

Dimensions Drawings

Dimensions

Right and Front View

mm
in.

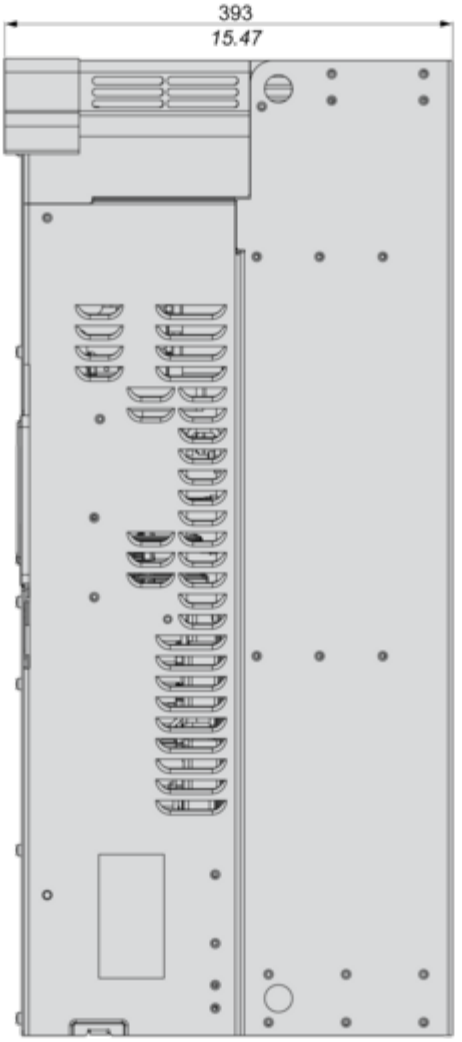

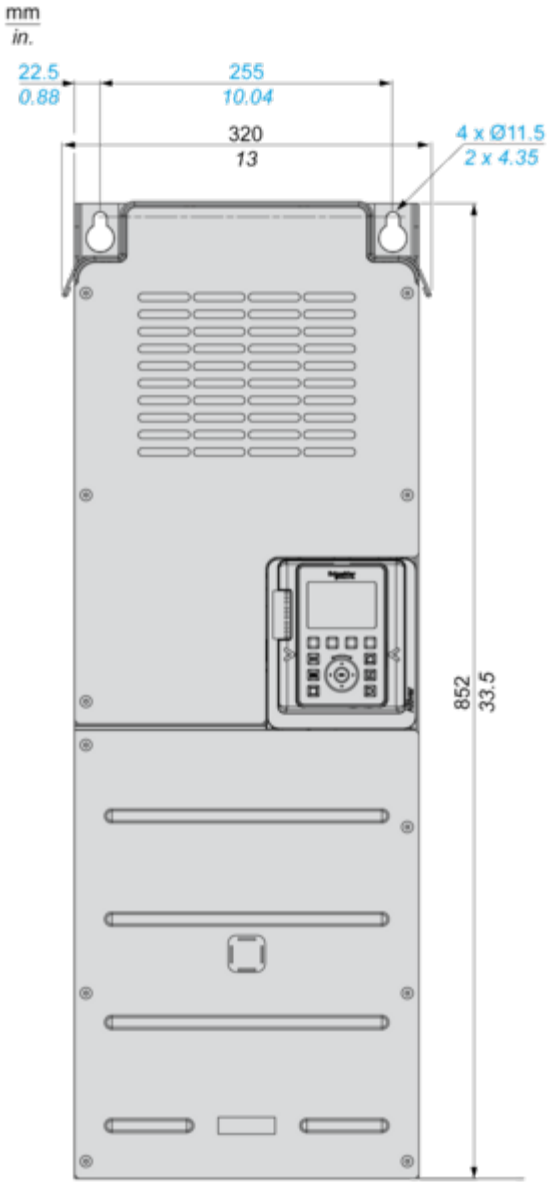

Drives with Lower Conduit Box Sold Separately

Rear, Front and Left View

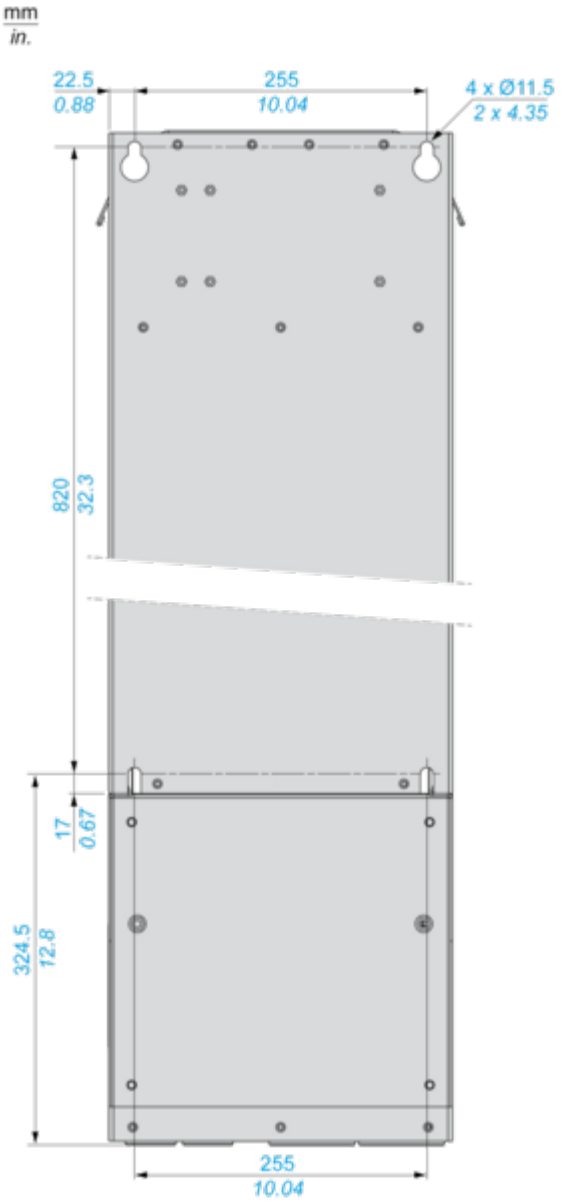
mm
in.
22.5
0.88
255
10.04
4 x Ø11.5
2 x 4.35
820
32.3
17
0.67
324.5
12.8
255
10.04

mm
in.

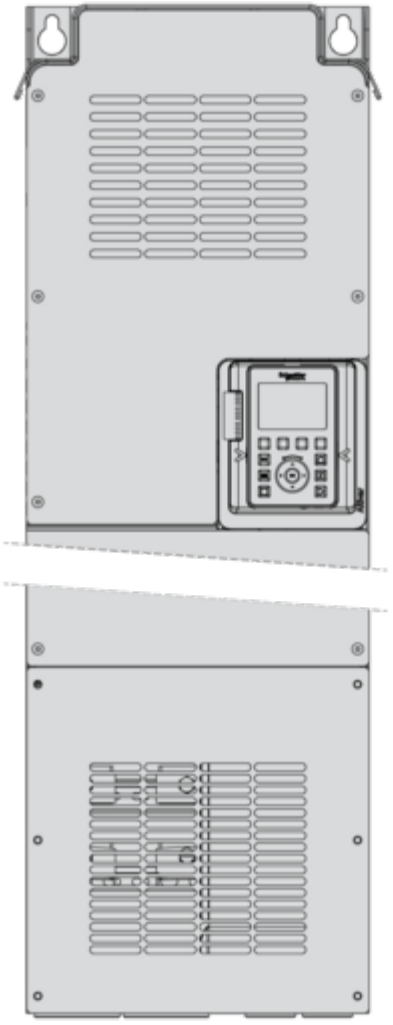

mm
in.

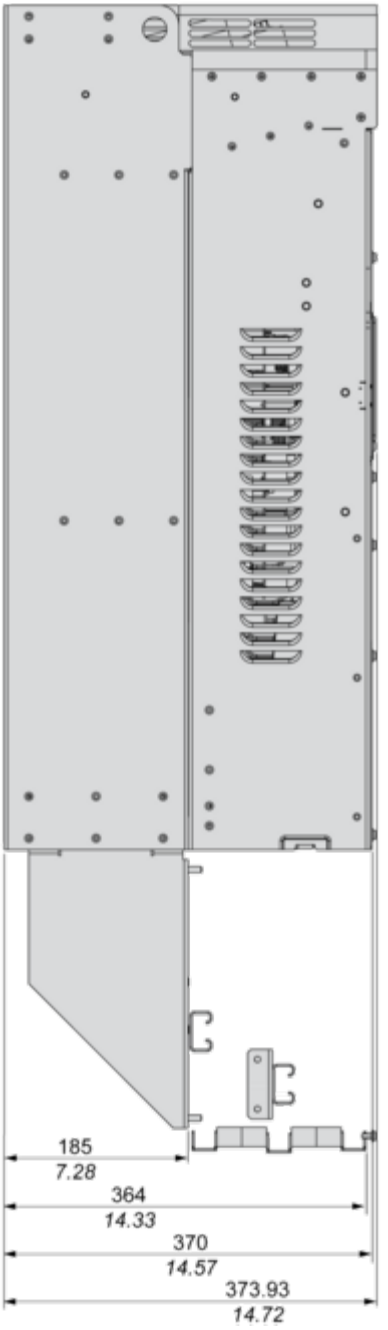

Mounting and Clearance

Clearances

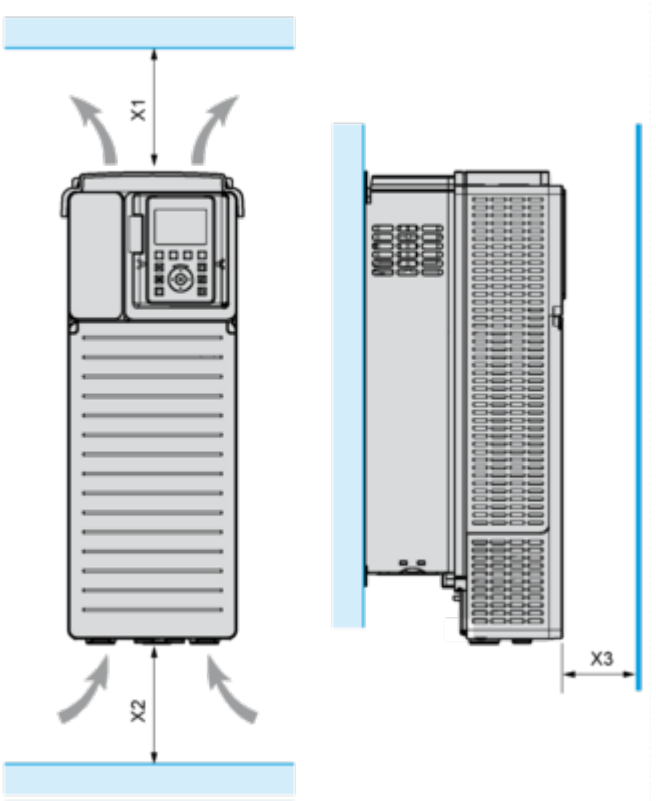

X1	X2	X3
≥ 250 mm (10 in.)	≥ 250 mm (10 in.)	≥ 100 mm (3.94 in.)

- Mount the device in a vertical position (±10°). This is required for cooling the device.
- Do not mount the device close to heat sources.
- Leave sufficient free space so that the air required for cooling purposes can circulate from the bottom to the top of the drive.

Mounting Types

Mounting Type A: Individual IP21

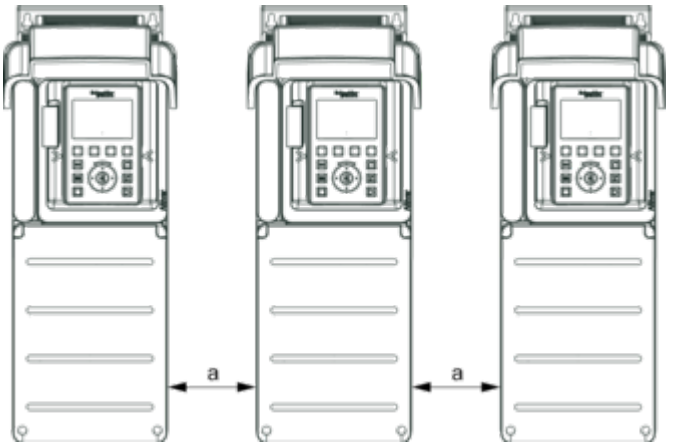

a ≥ = 110 mm (4.33 in.)

Mounting Type B: Side by Side IP20 , Only possible at ambient temperature lower than 40 °C (104 °F)

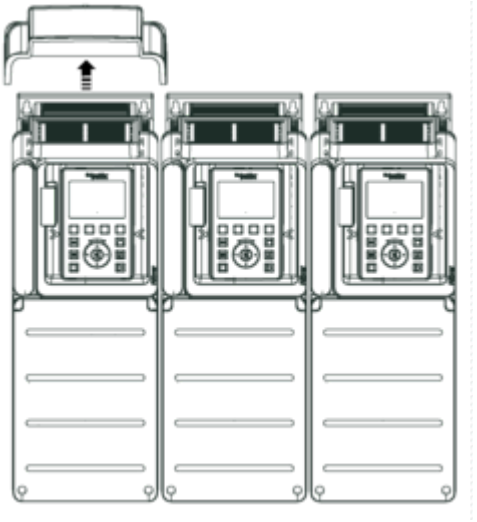

Mounting Type C: Individual IP20

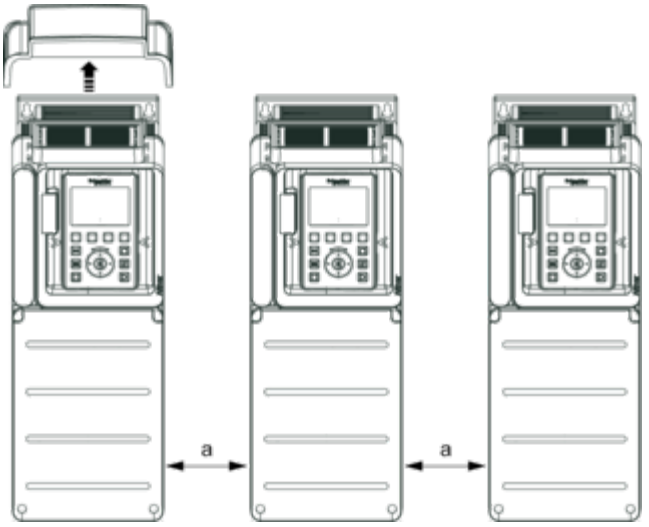

a ≥ = 110 mm (4.33 in.)

Connections and Schema

Three-Phase Power Supply with Upstream Breaking via Line Contactor

Connection diagrams conforming to standards EN 954-1 category 1 and IEC/EN 61508 capacity SIL1, stopping category 0 in accordance with standard IEC/EN 60204-1

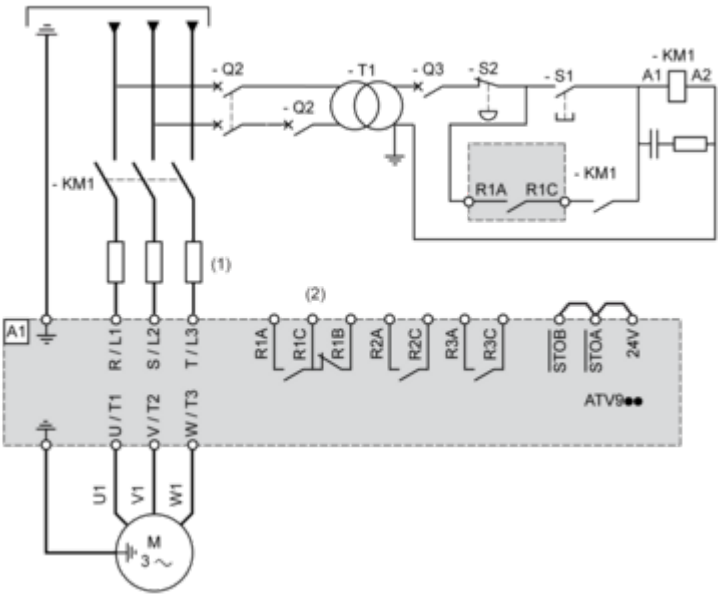

(1) Line choke if used
(2) Use relay R1 set to operating state Fault to switch Off the product once an error is detected.
A1 : Drive
KM1 : Line Contactor
Q2, Q3 : Circuit breakers
S1, S2 : Pushbuttons
T1 : Transformer for control part

Three-Phase Power Supply with Downstream Breaking via Contactor

Connection diagrams conforming to standards EN 954-1 category 1 and IEC/EN 61508 capacity SIL1, stopping category 0 in accordance with standard IEC/EN 60204-1

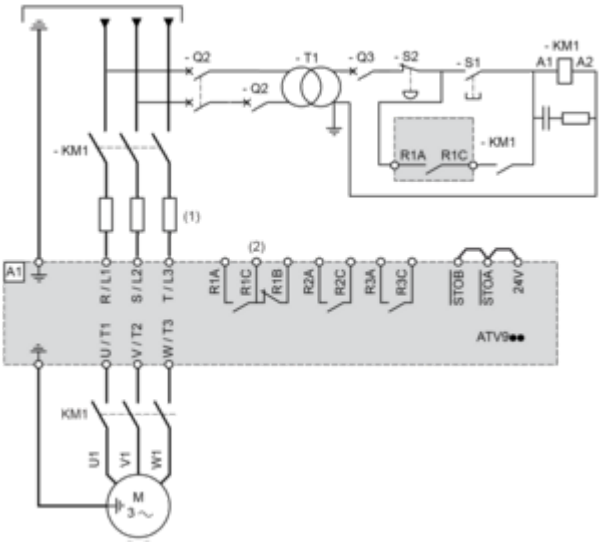

(1) Line choke if used
(2) Use relay R1 set to operating state Fault to switch Off the product once an error is detected.
A1 : Drive
KM1 : Contactor

Control Block Wiring Diagram

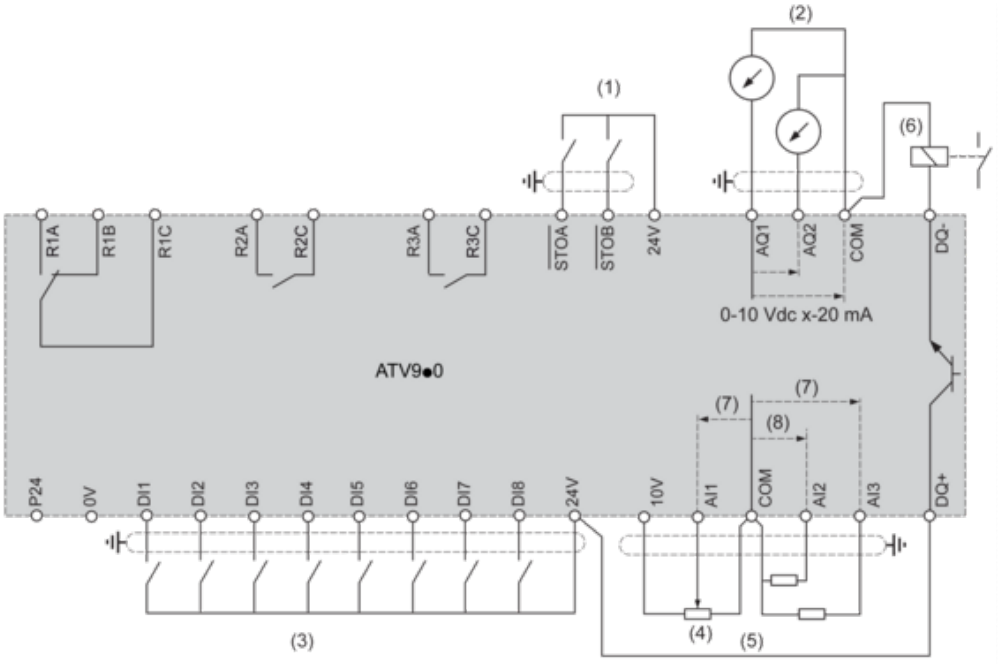

(1) Safe Torque Off
(2) Analog Output
(3) Digital Input
(4) Reference potentiometer
(5) Analog Input
(6) Digital Output
(7) 0-10 Vdc, x-20 mA
(8) 0-10 Vdc, -10 Vdc...+10 Vdc
R1A, R1B, R1C : Fault relay
R2A, R2C : Sequence relay
R3A, R3C : Sequence relay

Sensor Connection

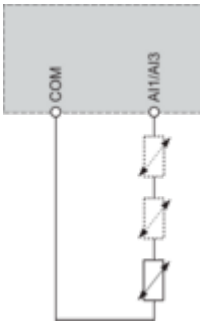

It is possible to connect either 1 or 3 sensors on terminals AI1 or AI3

Sink / Source Switch Configuration

The switch is used to adapt the operation of the logic inputs to the technology of the programmable controller outputs.

- Set the switch to Source (factory setting) if using PLC outputs with PNP transistors.
- Set the switch to Ext if using PLC outputs with NPN transistors.

Switch Set to SRC (Source) Position Using the Output Power Supply for the Digital Inputs

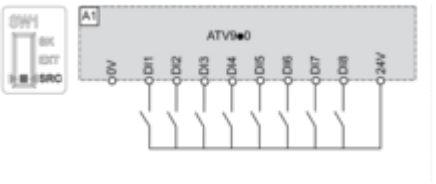

Switch Set to SRC (Source) Position and Use of an External Power Supply for the DIs

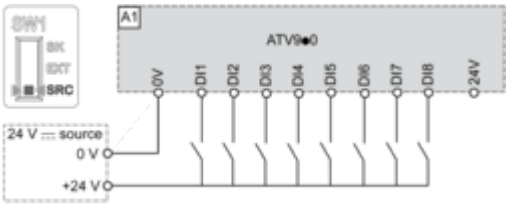

Switch Set to SK (Sink) Position Using the Output Power Supply for the Digital Inputs

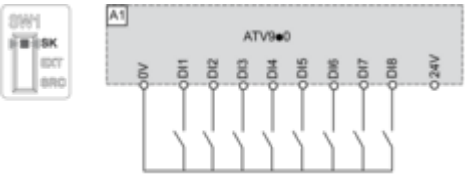

Switch Set to EXT Position Using an External Power Supply for the DIs

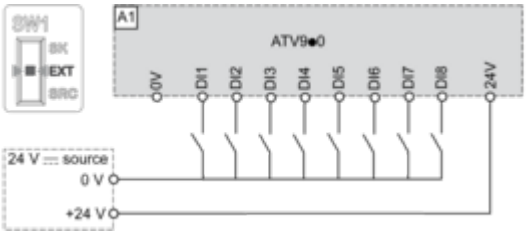

Performance Curves

Derating Curves

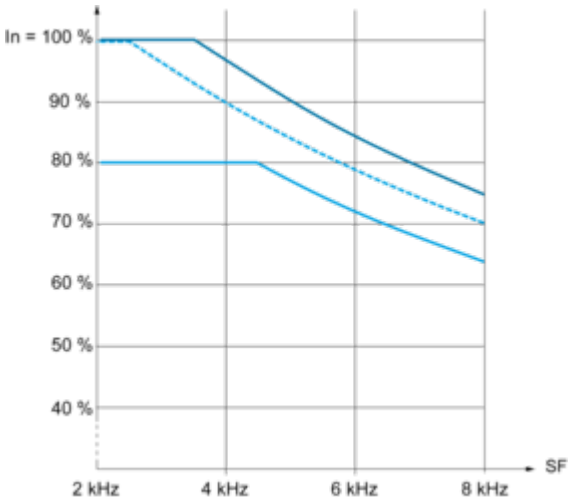

40 °C (104 °F) - Mounting type A, B and C
50 °C (122 °F) - Mounting type A and C
60 °C (140 °F) - Mounting type C
In : Nominal Drive Current
SF : Switching Frequency

Image of product / Alternate images
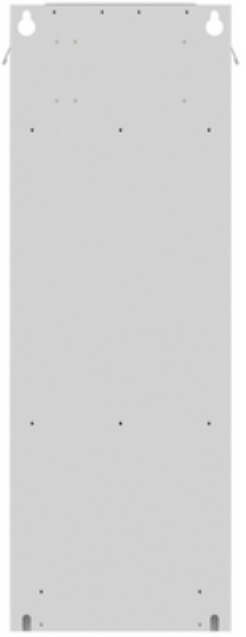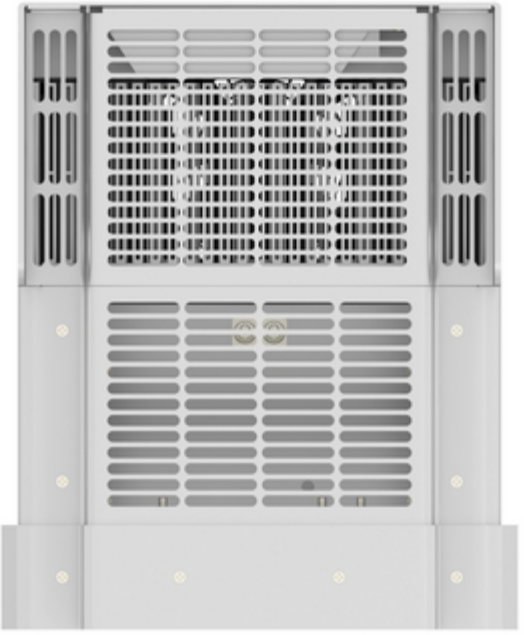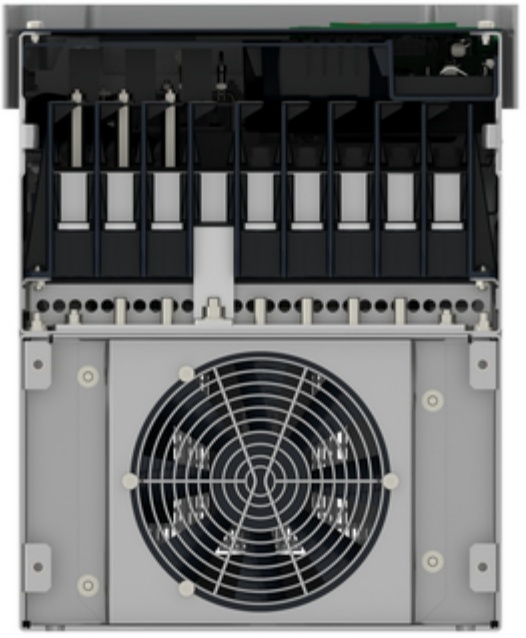
Alternative