Product data sheet

Specifications

Variable Speed Drive, Altivar Process ATV600, ATV630, 75kW, 100hp, 200 to 240V, IP00

ATV630D75M3

Product availability: Stock - Normally stocked in distribution facility

Main

Range of Product	Altivar Process ATV600
Product Specific Application	Process and utilities
Product or Component Type	Variable speed drive
Variant	Standard version
Device short name	ATV630
Mounting Mode	Wall mount
Communication Port Protocol	Modbus serial Ethernet Modbus TCP
[Us] rated supply voltage	200...240 V - 15...10 %
[Us] rated supply voltage	200...240 V
Relative symmetric mains voltage tolerance	10 %
Relative symmetric network frequency tolerance	5 %
nominal output current	282.0 A
IP degree of protection	IP21
Product destination	Asynchronous motors Synchronous motors
EMC filter	Without EMC filter
IP degree of protection	IP00IEC 61800-5-1 IP00IEC 60529 IP21 with kit VW3A9704)IEC 61800-5-1 IP21 with kit VW3A9704)IEC 60529
Type of cooling	Forced convection
Supply frequency	50...60 Hz - 5...5 %
Motor power kW	75 kW normal duty) 55 kW heavy duty)
Maximum Horse Power Rating	100 hp normal duty 75 hp heavy duty
Line current	256 A 200 V normal duty) 215 A 240 V normal duty) 189 A 200 V heavy duty) 161 A 240 V heavy duty)
Continuous output current	211 A 2.5 kHz heavy duty 282 A 2.5 kHz normal duty
Speed drive output frequency	0.1…500 Hz
Safety function	STO (safe torque off) SIL 3

Price is “List Price” and may be subject to a trade discount – check with your local distributor or retailer for actual price.

Disclaimer: This documentation is not intended as a substitute for and is not to be used for determining suitability or reliability of these products for specific user applications

Option card	Slot A communication module, Profibus DP V1 Slot A communication module, PROFINET Slot A communication module, DeviceNet Slot A communication module, Modbus TCP/EtherNet/IP Slot A communication module, CANopen daisy chain RJ45 Slot A communication module, CANopen SUB-D 9 Slot A communication module, CANopen screw terminals Slot A/slot B digital and analog I/O extension module Slot A/slot B output relay extension module Slot A communication module, Ethernet IP/Modbus TCP/MD-Link communication module, BACnet MS/TP communication module, Ethernet Powerlink

Complementary

Discrete input number	8
Discrete input type	DI7, DI8 programmable as pulse input 0…30 kHz, 24 V DC <= 30 V)
Discrete input logic	16 preset speeds
Discrete output number	0
Discrete output type	Relay outputs R1A, R1B, R1C 250 V AC 3000 mA Relay outputs R1A, R1B, R1C 30 V DC 3000 mA Relay outputs R2A, R2C 250 V AC 5000 mA Relay outputs R2A, R2C 30 V DC 5000 mA Relay outputs R3A, R3C 250 V AC 5000 mA Relay outputs R3A, R3C 30 V DC 5000 mA
Analogue input number	3
Analogue input type	AI1, AI2, AI3 software-configurable voltage 0...10 V DC 31.5 kOhm 12 bits AI1, AI2, AI3 software-configurable current 0...20 mA 250 Ohm 12 bits AI2 voltage analog input - 10...10 V DC 31.5 kOhm 12 bits
Analogue output number	2
Analogue output type	Software-configurable voltage AQ1, AQ2 0...10 V DC 470 Ohm 10 bits Software-configurable current AQ1, AQ2 0...20 mA 10 bits Software-configurable current DQ-, DQ+ 30 V DC Software-configurable current DQ-, DQ+ 100 mA
Relay output number	3
Relay output type	Configurable relay logic R1 fault relay NO/NC 100000 cycles Configurable relay logic R2 sequence relay NO 100000 cycles Configurable relay logic R3 sequence relay NO 100000 cycles
Maximum switching current	Relay output R1, R2, R3 resistive, cos phi = 1 3 A 250 V AC Relay output R1, R2, R3 resistive, cos phi = 1 3 A 30 V DC Relay output R1, R2, R3 inductive, cos phi = 0.4 7 ms 2 A 250 V AC Relay output R1, R2, R3 inductive, cos phi = 0.4 7 ms 2 A 30 V DC
Minimum switching current	Relay output R1, R2, R3 5 mA 24 V DC
Phase	3 phase
Physical interface	Ethernet 2-wire RS 485
Method of access	Slave Modbus TCP
Transmission Rate	10, 100 Mbits 4800 bps, 9600 bps, 19200 bps, 38.4 Kbps
Transmission frame	RTU
Output voltage	<= power supply voltage
Permissible temporary current boost	1.1 x In 60 s normal duty) 1.5 x In 60 s heavy duty)
Data format	8 bits, configurable odd, even or no parity
Type of polarization	No impedance
Frequency resolution	Display unit 0.1 Hz Analog input 0.012/50 Hz

Electrical connection	Control removable screw terminals 0.5...1.5 mm² AWG 20...AWG 16 Line side screw terminal 2 x 95...3 x 120 mm² 2 x AWG 3/0...2 x 300 kcmil Motor screw terminal 2 x 95...3 x 120 mm² 2 x AWG 3/0...2 x 300 kcmil
Connector type	RJ45 on the remote graphic terminal)Ethernet/Modbus TCP RJ45 on the remote graphic terminal)Modbus serial
Exchange mode	Half duplex, full duplex, autonegotiation Ethernet/Modbus TCP
Number of addresses	1…247 Modbus serial
Supply	External supply for digital inputs 24 V DC 19…30 V), <1.25 mA overload and short-circuit protection Internal supply for reference potentiometer (1 to 10 kOhm) 10.5 V DC +/- 5 %, <10 mA overload and short-circuit protection Internal supply for digital inputs and STO 24 V DC 21…27 V), <200 mA overload and short-circuit protection
Local signalling	3 LEDs for local diagnostic 3 LEDs (dual colour) for embedded communication status 4 LEDs (dual colour) for communication module status 1 LED (red) for presence of voltage
Input compatibility	DI1...DI6 discrete input level 1 PLC IEC 61131-2 DI5, DI6 discrete input level 1 PLC IEC 65A-68 STOA, STOB discrete input level 1 PLC IEC 61131-2
Discrete input logic	Positive logic (source) DI1...DI8), < 5 V, > 11 V Negative logic (sink) DI1...DI8), > 16 V, < 10 V
Sampling duration	2 ms +/- 0.5 ms DI1...DI4) - discrete input 5 ms +/- 1 ms DI5, DI6) - discrete input 5 ms +/- 0.1 ms AI1, AI2, AI3) - analog input 10 ms +/- 1 ms AO1) - analog output
Accuracy	+/- 0.6 % AI1, AI2, AI3 for a temperature variation 60 °C analog input +/- 1 % AO1, AO2 for a temperature variation 60 °C analog output
Linearity error	AI1, AI2, AI3 +/- 0.15 % of maximum value analog input AO1, AO2 +/- 0.2 % analog output
Refresh time	Relay output R1, R2, R3)5 ms +/- 0.5 ms)
Isolation	Between power and control terminals
Discrete and process manufacturing	Building - HVAC compressor centrifugal Food and beverage processing other application Mining mineral and metal fan Mining mineral and metal pump Oil and gas fan Water and waste water other application Building - HVAC screw compressor Food and beverage processing pump Food and beverage processing fan Food and beverage processing atomization Oil and gas electro submersible pump (ESP) Oil and gas water injection pump Oil and gas jet fuel pump Oil and gas compressor for refinery Water and waste water centrifuge pump Water and waste water positive displacement pump Water and waste water electro submersible pump (ESP) Water and waste water screw pump Water and waste water lobe compressor Water and waste water screw compressor Water and waste water compressor centrifugal Water and waste water fan Water and waste water conveyor Water and waste water mixer
Power range	55…100 kW 200…240 V 3 phase
Enclosure mounting	Wall mounted
4 quadrant operation possible	False
Asynchronous motor control profile	Constant torque standard Optimized torque mode Variable torque standard

Synchronous motor control profile	Permanent magnet motor Synchronous reluctance motor
Maximum output frequency	500 kHz
Acceleration and deceleration ramps	Linear adjustable separately from 0.01...9999 s
Motor slip compensation	Adjustable Can be suppressed Not available in permanent magnet motor law Automatic whatever the load
Switching frequency	2.5...8 kHz with derating factor 2...8 kHz adjustable
Nominal switching frequency	2.5 kHz
Braking to standstill	By DC injection
Brake chopper integrated	False
Maximum Input Current per Phase	256.0 A
Maximum output voltage	240.0 V
Apparent power	83.7 kVA 240 V normal duty) 61.1 kVA 240 V heavy duty)
Maximum transient current	310.2 A 60 s normal duty) 316.5 A 60 s heavy duty)
Network Frequency	50-60 Hz
Prospective line Isc	50 kA
Base load current at high overload	211.0 A
Base load current at low overload	282.0 A
With safety function Safely Limited Speed (SLS)	False
With safety function Safe brake management (SBC/SBT)	False
With safety function Safe Operating Stop (SOS)	False
With safety function Safe Position (SP)	False
With safety function Safe programmable logic	False
With safety function Safe Speed Monitor (SSM)	False
With safety function Safe Stop 1 (SS1)	False
With sft fct Safe Stop 2 (SS2)	False
With safety function Safe torque off (STO)	True
With safety function Safely Limited Position (SLP)	False
With safety function Safe Direction (SDI)	False
Protection type	Thermal protection motor Safe torque off motor Motor phase break motor Thermal protection drive Safe torque off drive Overheating drive Overcurrent between output phases and earth drive Overload of output voltage drive Short-circuit protection drive Motor phase break drive Overvoltages on the DC bus drive Line supply overvoltage drive Line supply undervoltage drive Line supply phase loss drive Overspeed drive Break on the control circuit drive

Quantity per Set	1
Width	12.6 in (320 mm)
Height	33.5 in (852 mm)
Depth	15.4 in (390 mm)
Product Weight	185.2 lb(US) (84 kg)

Environment

Insulation resistance	> 1 MOhm 500 V DC for 1 minute to earth
Noise level	69.9 dB 86/188/EEC
Pollution degree	2 IEC 61800-5-1
Vibration resistance	1.5 mm peak to peak (f= 2…13 Hz) conforming to IEC 60068-2-6 1 gn (f= 13…200 Hz) conforming to IEC 60068-2-6
Shock resistance	15 gn 11 ms IEC 60068-2-27
Relative humidity	5…95 % without condensation IEC 60068-2-3
Ambient air temperature for operation	5…122 °F (-15…50 °C) (without derating) 122…140 °F (50…60 °C) (with derating factor)
Operating altitude	<= 3280.84 ft (1000 m) without derating 1000...4800 m with current derating 1 % per 100 m
Operating position	Vertical +/- 10 degree
Product Certifications	UL DNV-GL TÜV CSA ATEX zone 2/22 ATEX INERIS
Marking	CE
Standards	UL 508C IEC 61800-3 IEC 61800-3 environment 1 category C2 EN/IEC 61800-3 environment 2 category C3 IEC 61800-5-1 IEC 61000-3-12 IEC 60721-3 IEC 61508 IEC 13849-1
Maximum THDI	<48 % full load IEC 61000-3-12
Electromagnetic compatibility	Electrostatic discharge immunity test level 3 conforming to IEC 61000-4-2 Radiated radio-frequency electromagnetic field immunity test level 3 conforming to IEC 61000-4-3 Electrical fast transient/burst immunity test level 4 conforming to IEC 61000-4-4 1.2/50 µs - 8/20 µs surge immunity test level 3 conforming to IEC 61000-4-5 Conducted radio-frequency immunity test level 3 conforming to IEC 61000-4-6
Environmental class (during operation)	Class 3C3 according to IEC 60721-3-3 Class 3S3 according to IEC 60721-3-3
Maximum acceleration under shock impact (during operation)	60 m/s² at 11 ms
Maximum acceleration under vibrational stress (during operation)	10 m/s² at 13...200 Hz
Maximum deflection under vibratory load (during operation)	1.5 mm at 2...13 Hz
Permitted relative humidity (during operation)	Class 3K5 according to EN 60721-3
Volume of cooling air	158506.07 Gal/hr(US) (600 m3/h)
Overvoltage category	III
Regulation loop	Adjustable PID regulator

Noise level	69.9 dB
Pollution degree	2
Ambient air transport temperature	-40…158 °F (-40…70 °C)
Ambient Air Temperature for Storage	-40…158 °F (-40…70 °C)

Ordering and shipping details

Category	US1CP4E22207
Discount Schedule	CP4E
GTIN	3606480701559
Returnability	Yes
Country of origin	IN

Packing Units

Unit Type of Package 1	PCE
Nbr. of units in pkg.	1
Package 1 Height	25.5 in (64.8 cm)
Package 1 Width	18.3 in (46.5 cm)
Package 1 Length	40.4 in (102.5 cm)
Package weight(Lbs)	308.6 lb(US) (140.0 kg)

Contractual warranty

Warranty (in months)	18

Environmental Data

Schneider Electric aims to achieve Net Zero status by 2050 through supply chain partnerships, lower impact materials, and circularity via our ongoing “Use Better, Use Longer, Use Again” campaign to extend product lifetimes and recyclability.

Environmental Data explained

How we assess product sustainability

Environmental footprint

Total lifecycle Carbon footprint	**31 576 kg CO2 eq.**
Carbon footprint of the manufacturing phase [A1 to A3]	**708 kg CO2 eq.**
Carbon footprint of the distribution phase [A4]	**18 kg CO2 eq.**
Carbon footprint of the installation phase [A5]	**23 kg CO2 eq.**
Carbon footprint of the use phase [B2, B3, B4, B6]	**30 716 kg CO2 eq.**
Carbon footprint of the end-of-life phase [C1 to C4]	**111 kg CO2 eq.**
Environmental Disclosure	**Product Environmental Profile**

Use Better

Materials and Substances

Packaging made with recycled cardboard	**Yes**
Packaging without single use plastic	**No**
SCIP Number	**3a1ae1b7-96ff-4a20-9804-40393f13630f**
EU RoHS Directive	**Compliant By Exemption**
REACh Regulation	**Reference contains Substances of Very High Concern above the threshold**
California proposition 65	**WARNING: This product can expose you to chemicals including: Lead and lead compounds, which is known to the State of California to cause cancer and birth defects or other reproductive harm. For more information go to www.P65Warnings.ca.gov**

Energy efficiency

Product contributes to saved and avoided emissions	**Yes**

Use Longer

Lifetime extension

Repair	**No**

Use Again

Repack and remanufacture

Recyclability potential, in %	**82**
Circularity Profile	**End of Life Information**
Removable battery	**Yes**

Take-back	**No**
WEEE Label	**The product must be disposed on European Union markets following specific waste collection and never end up in rubbish bins.**

Dimensions Drawings

Dimensions

Drives with IP21 Top Cover

Right and Front Views

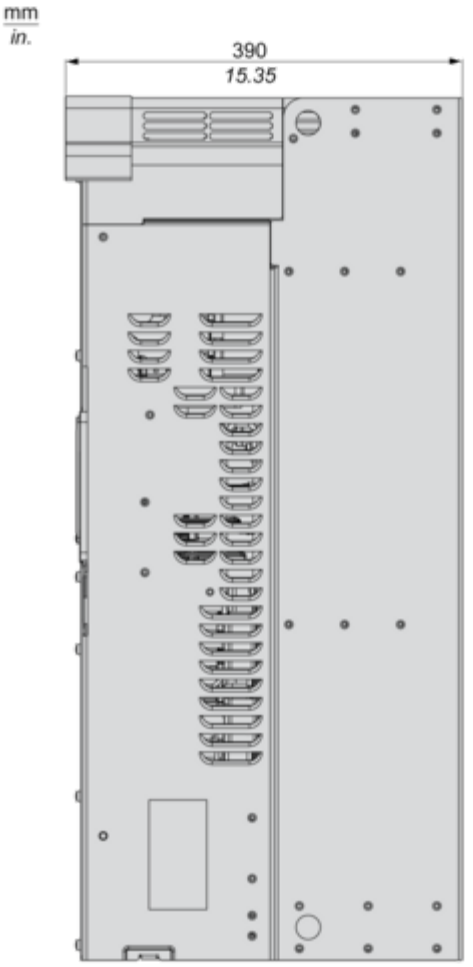
mm
in.
390
15.35

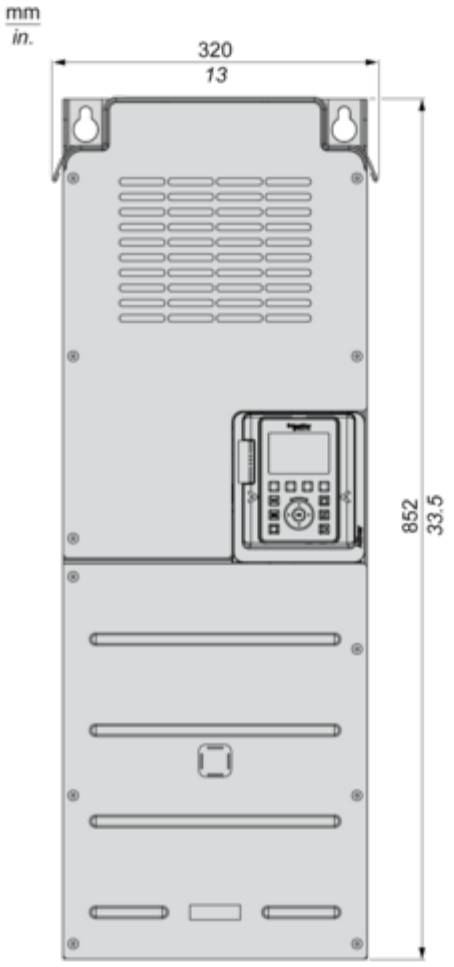

Drives Without IP21 Top Cover

Right and Front Views

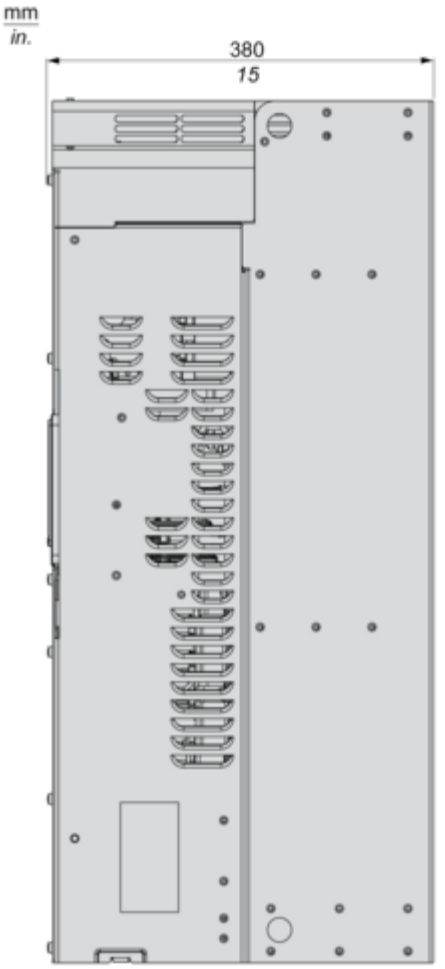
mm
in.
380
15

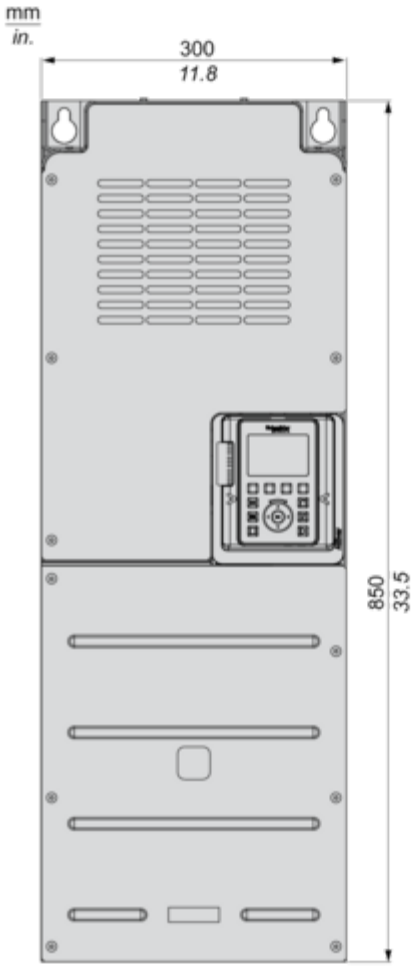

Drives with Lower Conduit Box Sold Separately

Rear, Front and Left Views

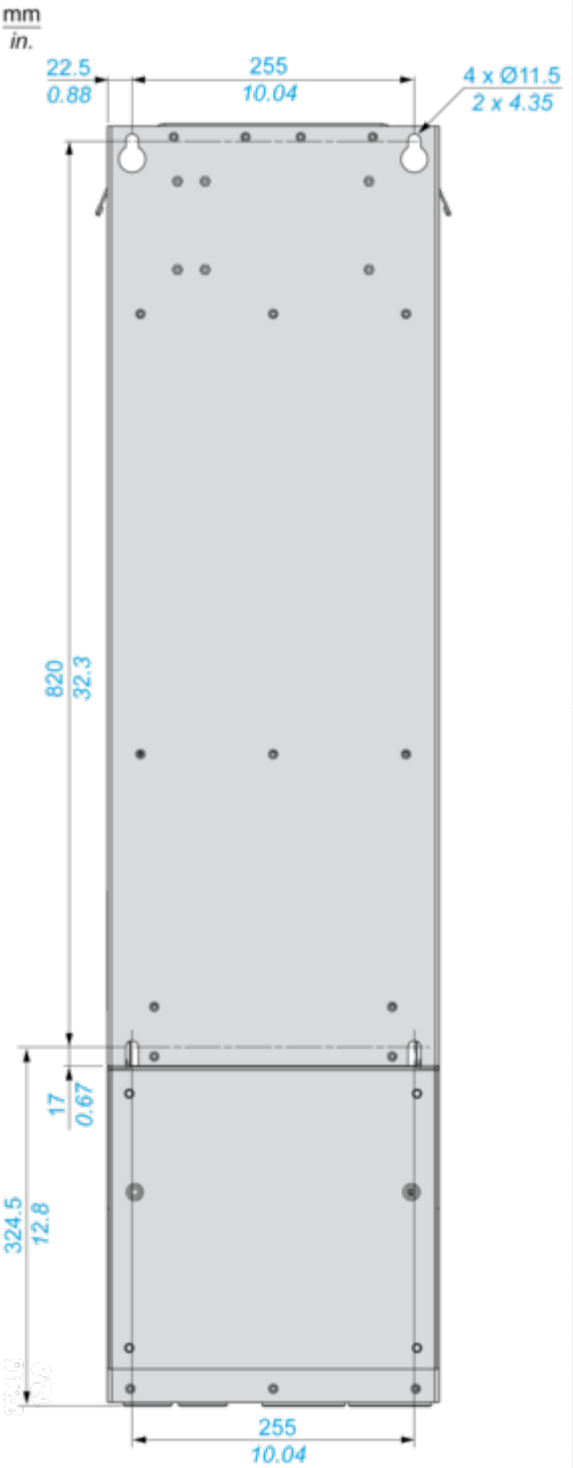
mm
in.
22.5
0.88
255
10.04
4 x Ø11.5
2 x 4.35
820
32.3
17
0.67
324.5
12.8
255
10.04

mm
in.

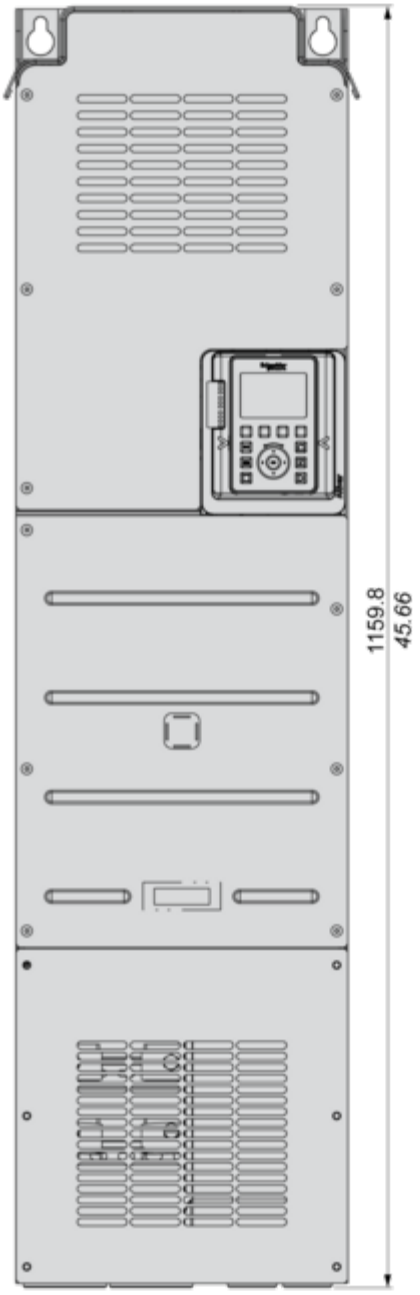

mm
in.

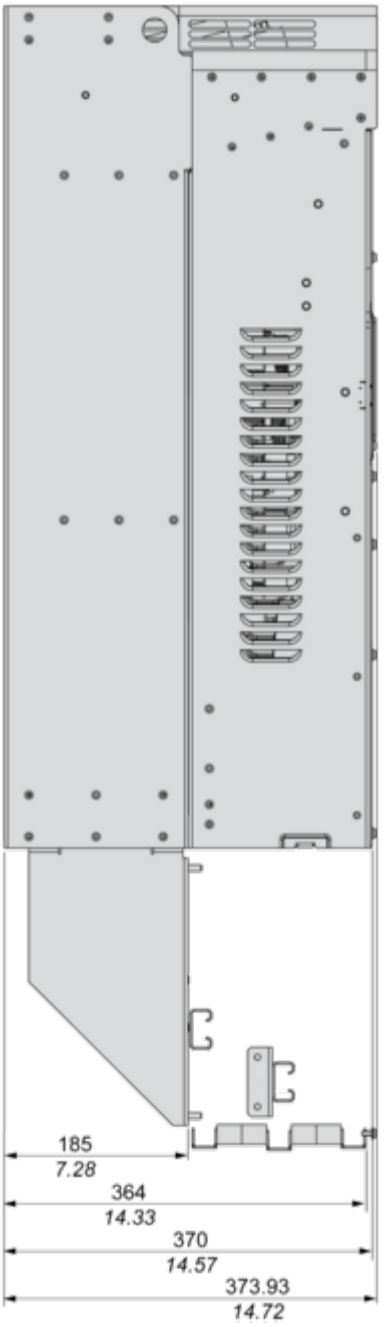

Mounting and Clearance

Clearances

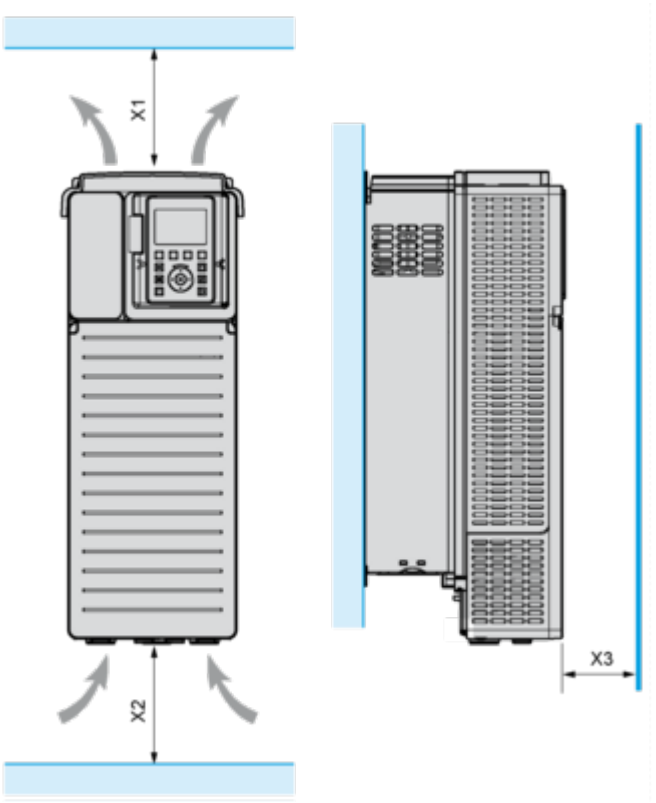

X1	X2	X3
≥ 250 mm (10 in.)	≥ 250 mm (10 in.)	≥ 100 mm (3.94 in.)

Mounting Types

Mounting Type A: Individual IP21

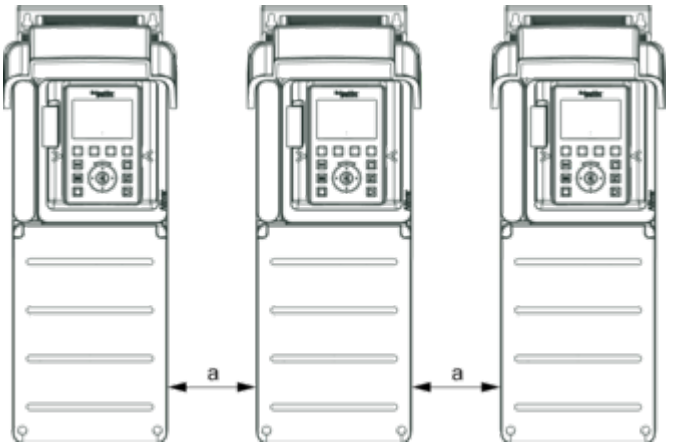

a ≥ = 110 mm (4.33 in.)

Mounting Type B: Side by Side IP20 , Only possible at ambient temperature lower than 40 °C (104 °F)

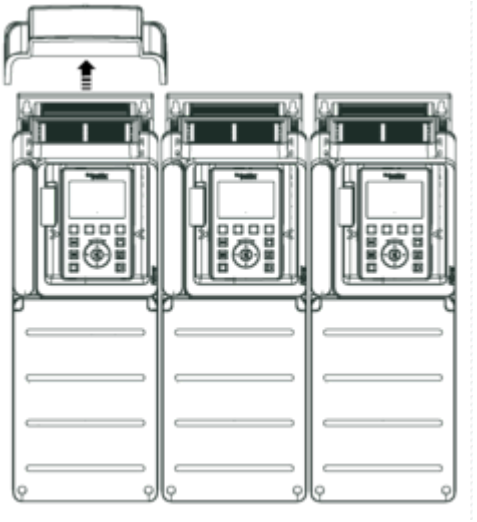

Mounting Type C: Individual IP20

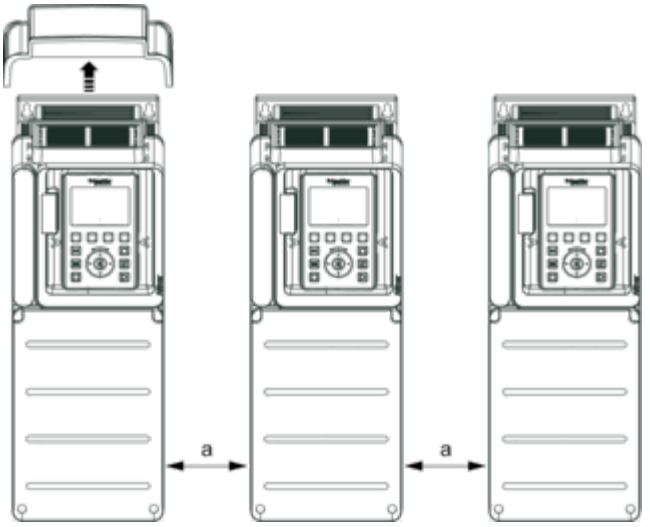

a ≥ = 110 mm (4.33 in.)

Connections and Schema

Three-Phase Power Supply with Upstream Breaking via Line Contactor

Connection diagrams conforming to standards EN 954-1 category 1 and IEC/EN 61508 capacity SIL1, stopping category 0 in accordance with standard IEC/EN 60204-1

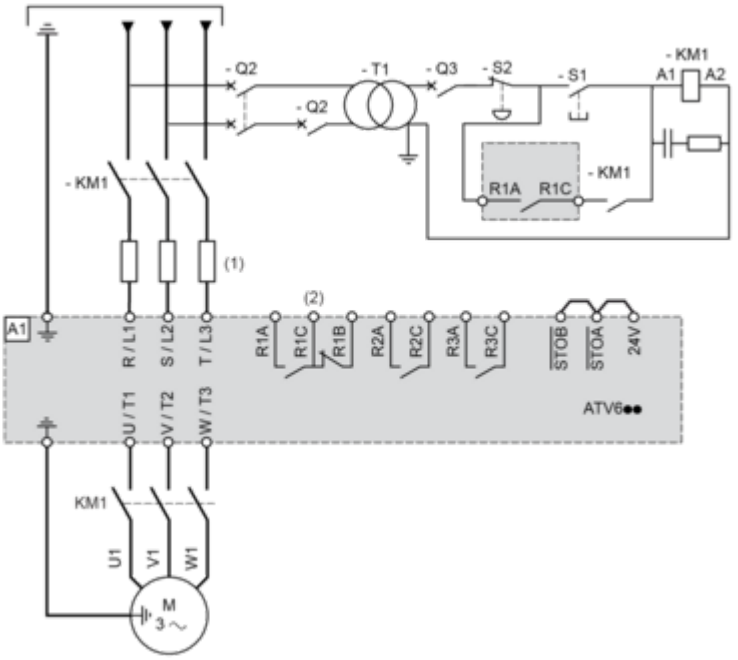

(1) Line choke if used
(2) Use relay R1 set to operating state Fault to switch Off the product once an error is detected.
A1 : Drive
KM1 : Line Contactor
Q2, Q3 : Circuit breakers
S1, S2 : Pushbuttons
T1 : Transformer for control part

Three-Phase Power Supply with Downstream Breaking via Contactor

Connection diagrams conforming to standards EN 954-1 category 1 and IEC/EN 61508 capacity SIL1, stopping category 0 in accordance with standard IEC/EN 60204-1

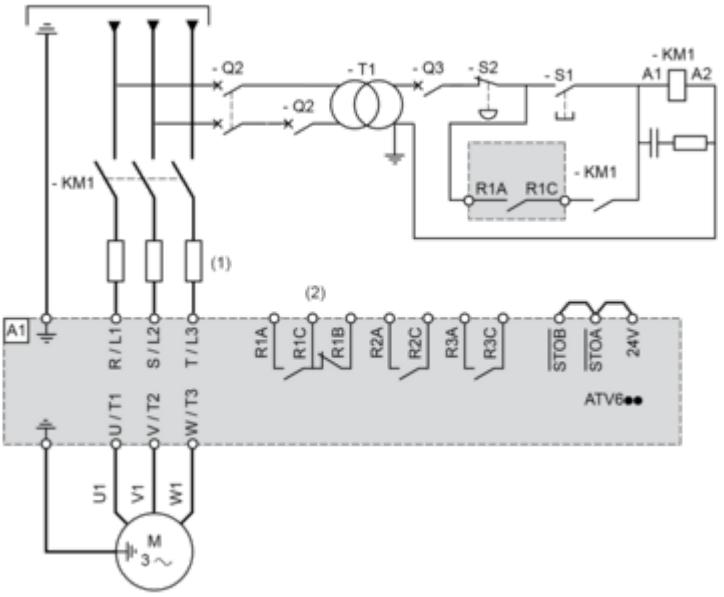

(1) Line choke if used
(2) Use relay R1 set to operating state Fault to switch Off the product once an error is detected.
A1 : Drive
KM1 : Contactor

Control Block Wiring Diagram

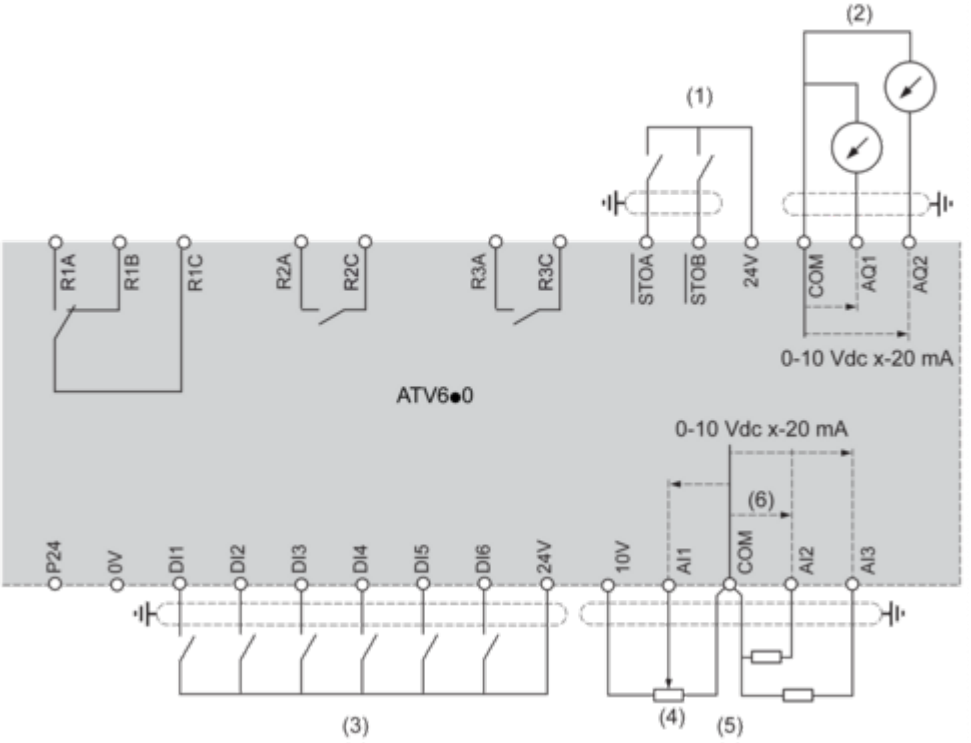

(1) Safe Torque Off
(2) Analog Output
(3) Digital Input
(4) Reference potentiometer
(5) Analog Input
R1A, R1B, R1C : Fault relay
R2A, R2C : Sequence relay
R3A, R3C : Sequence relay

Sensor Connection

It is possible to connect either 1 or 3 sensors on terminals AI2 or AI3.

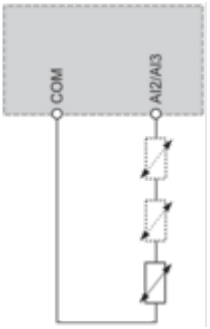

Sink / Source Switch Configuration

The switch is used to adapt the operation of the logic inputs to the technology of the programmable controller outputs.

- Set the switch to Source (factory setting) if using PLC outputs with PNP transistors.
- Set the switch to Ext if using PLC outputs with NPN transistors.

Switch Set to SRC (Source) Position Using the Output Power Supply for the Digital Inputs

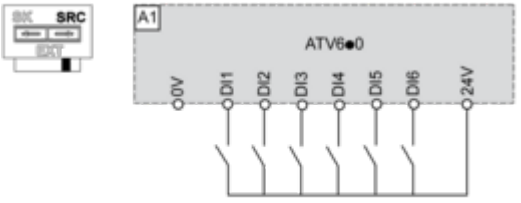

Switch Set to SRC (Source) Position and Use of an External Power Supply for the DIs

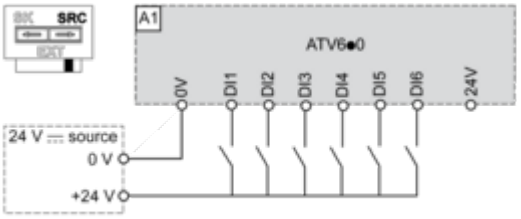

Switch Set to SK (Sink) Position Using the Output Power Supply for the Digital Inputs

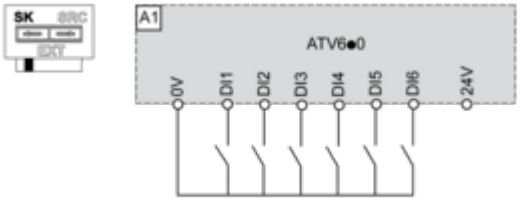

Switch Set to EXT Position Using an External Power Supply for the DIs

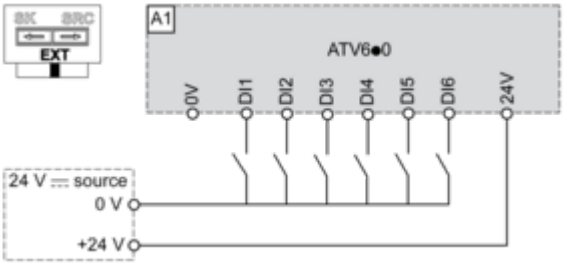

Performance Curves

Derating Curves

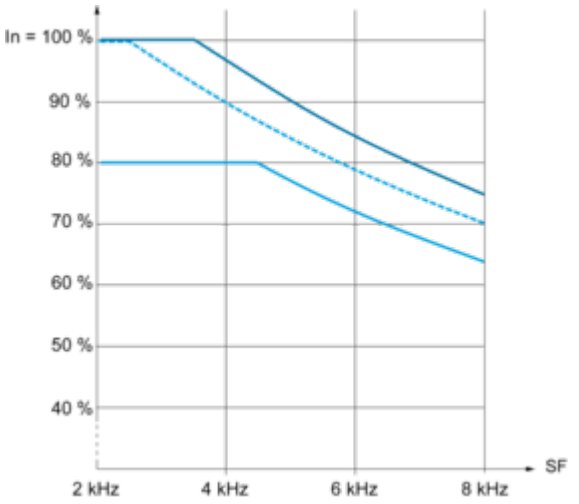

40 °C (104 °F) - Mounting type A, B and C
50 °C (122 °F) - Mounting type A and C
60 °C (140 °F) - Mounting type C
In : Nominal Drive Current
SF : Switching Frequency

Technical Illustration

Dimensions

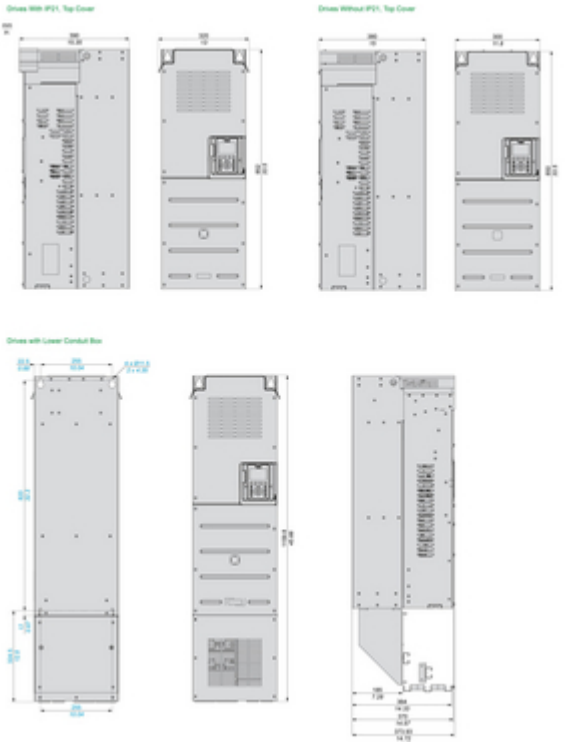

Image of product / Alternate images

Alternative