Product data sheet

Specifications

Soft starter, Altistart 480, 140A, 208 to 690V AC, control supply 110 to 230V AC

ATS480C14Y

Product availability: Stock - Normally stocked in distribution facility

Main

Range of Product	Altivar Soft Starter ATS480
Product or Component Type	Soft starter
Product destination	Asynchronous motors
Product Specific Application	Process and infrastructures
Device short name	ATS480
Phase	3 phase
Utilisation category	AC-3A AC-53A
Ue power supply voltage	208...690 V - 15...10 %
power supply frequency	50...60 Hz - 20...20 %
[Ie] rated operational current	Normal duty 140.0 A 104 °F (40 °C))
rated current in heavy duty	110.0 A at 104 °F (40 °C) heavy duty
Torque control	True
IP Degree of Protection	IP00
Motor power kW	37.0 kW 230 V in the motor supply line normal duty 30.0 kW 230 V in the motor supply line heavy duty 75.0 kW 400 V in the motor supply line normal duty 55.0 kW 400 V in the motor supply line heavy duty 75.0 kW 440 V in the motor supply line normal duty 55.0 kW 440 V in the motor supply line heavy duty 90.0 kW 500 V in the motor supply line normal duty 75.0 kW 500 V in the motor supply line heavy duty 90.0 kW 525 V in the motor supply line normal duty 75.0 kW 525 V in the motor supply line heavy duty 110.0 kW 660 V in the motor supply line normal duty 90.0 kW 660 V in the motor supply line heavy duty 110.0 kW 690 V in the motor supply line normal duty 90.0 kW 690 V in the motor supply line heavy duty 75.0 kW 230 V to the motor delta terminals normal duty 55.0 kW 230 V to the motor delta terminals heavy duty 110.0 kW 400 V to the motor delta terminals normal duty 90.0 kW 400 V to the motor delta terminals heavy duty
Maximum Horse Power Rating	40.0 hp 208 V normal duty 30.0 hp 208 V heavy duty 50.0 hp 230 V normal duty 40.0 hp 230 V heavy duty 100.0 hp 460 V normal duty 75.0 hp 460 V heavy duty 125.0 hp 575 V normal duty 100.0 hp 575 V heavy duty
Option card	Communication module Profibus DP V1 Communication module Modbus TCP/EtherNet/IP Communication module CANopen daisy chain Communication module CANopen Sub-D Communication module CANopen open style Communication module PROFINET

Price is “List Price” and may be subject to a trade discount – check with your local distributor or retailer for actual price.

Disclaimer: This documentation is not intended as a substitute for and is not to be used for determining suitability or reliability of these products for specific user applications

Complementary

Device connection	In the motor supply line To the motor delta terminals
[Us] control circuit voltage	110...230 V AC 50/60 Hz - 15...10 %
Apparent power	0.09 kVA
Integrated motor overload protection	True
motor thermal protection class	Class 10E
Protection type	Phase failure line Integrated thermal protection motor Thermal protection starter Current overload motor Underload motor Excessive starting time, locked rotor motor Motor phase loss motor Line supply phase loss line Line supply phase loss motor Thermal protection motor
current limiting %In (5 x Ie maximum)	150…700 %
[In] Rated current pwr loss specifctn	140.0 A
Power loss static current independent	25.0 W
Power loss per device current dependent	366.0 W
Standards	IEC 60947-4-2 UL 60947-4-2 IEC 60664-1
Product Certifications	CE cULus CCC UKCA RCM EAC DNV ABS BV CCS
Marking	CE CCC UKCA EAC RCM CULus
[Uc] control circuit voltage	24 V DC
Discrete input number	4
Discrete input type	STOP) logic inputs, 3500 Ohm RUN) logic inputs, 3500 Ohm DI3) programmable as logic input, 3500 Ohm DI4) programmable as logic input, 3500 Ohm
Input compatibility	STOP discrete input level 1 PLC IEC 61131-2 RUN discrete input level 1 PLC IEC 61131-2 DI3 discrete input level 1 PLC IEC 61131-2 DI4 discrete input level 1 PLC IEC 61131-2
Discrete input logic	Programmable digital input < 5 V
Relay output number	3
Relay output type	Relay outputs R1A 1 NO Relay outputs R1B 1 NO Relay outputs RIC NO/NC programmable
Minimum switching current	100 mA 12 V DC relay outputs

Maximum switching current	Relay outputs 2 A 250 V AC Relay outputs 2 A 30 V DC Relay outputs
Discrete output number	2
Discrete output type	DQ1) programmable digital output <= 30 V DQ2) programmable digital output <= 30 V
Output compatibility	Open collector level 1 PLC IEC 65A-68
Analogue input number	1
Analogue input type	AI1/PTC PTC/Pt 100 temperature probe PTC2 PTC/Pt 100 temperature probe PTC3 PTC/Pt 100 temperature probe
Analogue output number	1
Analogue output type	Current output AQ1 0...20 mA or 0...10 V 500 Ohm
Communication Port Protocol	Modbus serial
Connector Type	1 RJ45
Communication data link	Serial
Physical interface	2-wire RS 485
Transmission Rate	1200...256000 bit/s
Transmission frame	RTU
Data format	8 bits, configurable odd, even or no parity
Type of polarization	No impedance Modbus serial
Number of addresses	0…227 Modbus serial
Method of access	Slave Modbus serial
Function Available	External bypass control Pre-heating Smoke extraction Multi-motor cascade Second motor set User management Ports and services hardening Security event logging Cybersecure firmware update Single direction
Display screen available	True
Operating position	Vertical +/- 10 degree
Height	13.4 in (340.0 mm)
Width	7.9 in (200.0 mm)
Depth	10.7 in (272.0 mm)
Product Weight	27.3 lb(US) (12.4 kg)

Environment

Electromagnetic compatibility	Conducted and radiated emissions level A conforming to IEC 60947-4-2 Conducted and radiated emissions with bypass level B conforming to IEC 60947-4-2 Damped oscillating waves level 3 conforming to IEC 61000-4-12 Electrostatic discharge level 3 conforming to IEC 61000-4-11 Immunity to electrical transients level 4 conforming to IEC 61000-4-4 Immunity to radiated radio-electrical interference level 3 conforming to IEC 61000-4-3 Voltage/current impulse level 3 conforming to IEC 61000-4-5
Pollution degree	Level 3
[Uimp] rated impulse withstand voltage	6 kV

[Ui] Rated Insulation Voltage	690 V
Environmental class (during operation)	Class 3C3 according to IEC 60721-3-3 Class 3S2 according to IEC 60721-3-3
Relative humidity	0…95 % without condensation or dripping water IEC 60068-2-3
Ambient air temperature for operation	104…140 °F (40…60 °C) (with current derating of 2 % per °C) 5…104 °F (-15…40 °C) (without derating)
Ambient Air Temperature for Storage	-13…158 °F (-25…70 °C)
Operating altitude	<= 3280.84 ft (1000 m) without derating > 3280.84...13123.36 ft (> 1000...4000 m) with current derating 1 % per 100 m
Maximum deflection under vibratory load (during operation)	1.5 mm at 2...13 Hz
Maximum deflection under vibratory load (during storage)	1.75 mm at 2...9 Hz
Maximum deflection under vibratory load (during transport)	1.75 mm at 2...9 Hz
Maximum acceleration under vibrational stress (during operation)	10 m/s² at 13...200 Hz
Maximum acceleration under vibratory load (during storage)	15 m/s² at 200...500 Hz 10 m/s² at 9...200 Hz
Maximum acceleration under vibratory load (during transport)	15 m/s² at 200...500 Hz 10 m/s² at 9...200 Hz
Maximum acceleration under shock impact (during operation)	150 m/s² at 11 ms
Maximum acceleration under shock load (during storage)	100 m/s² at 11 ms
Maximum acceleration under shock load (during transport)	100 m/s² at 11 ms

Ordering and shipping details

Category	US1CP1G22588
Discount Schedule	CP1G
GTIN	3606481089083
Returnability	Yes
Country of origin	ID

Packing Units

Unit Type of Package 1	PCE
Nbr. of units in pkg.	1
Package 1 Height	16.9 in (43.0 cm)
Package 1 Width	12.6 in (32.0 cm)
Package 1 Length	17.9 in (45.5 cm)
Package weight(Lbs)	31.716 lb(US) (14.386 kg)
Unit Type of Package 2	S06
Number of Units in Package 2	2
Package 2 Height	29.5 in (75.0 cm)
Package 2 Width	23.6 in (60.0 cm)
Package 2 Length	31.5 in (80.0 cm)
Package 2 Weight	92.098 lb(US) (41.775 kg)

Contractual warranty

Warranty (in months)	18

Environmental Data

Schneider Electric aims to achieve Net Zero status by 2050 through supply chain partnerships, lower impact materials, and circularity via our ongoing “Use Better, Use Longer, Use Again” campaign to extend product lifetimes and recyclability.

Environmental Data explained

How we assess product sustainability

Environmental footprint

Total lifecycle Carbon footprint	**10 245 kg CO2 eq.**
Carbon footprint of the manufacturing phase [A1 to A3]	**442 kg CO2 eq.**
Carbon footprint of the distribution phase [A4]	**2 kg CO2 eq.**
Carbon footprint of the installation phase [A5]	**0.1 kg CO2 eq.**
Carbon footprint of the use phase [B2, B3, B4, B6]	**9 799 kg CO2 eq.**
Carbon footprint of the end-of-life phase [C1 to C4]	**2 kg CO2 eq.**
Environmental Disclosure	**Product Environmental Profile**

Use Better

Materials and Substances

Packaging made with recycled cardboard	**Yes**
Packaging without single use plastic	**No**
SCIP Number	**235fade3-9149-48f1-bcbb-f7f8456807da**
EU RoHS Directive	**Compliant By Exemption**
REACh Regulation	**Reference contains Substances of Very High Concern above the threshold**
California proposition 65	**WARNING: This product can expose you to chemicals including: Lead and lead compounds, which is known to the State of California to cause cancer and birth defects or other reproductive harm. For more information go to www.P65Warnings.ca.gov**

Use Longer

Lifetime extension

Repair	**No**

Use Again

Repack and remanufacture

Circularity Profile	**End of Life Information**
Removable battery	**Yes**
Take-back	**No**
WEEE Label	**The product must be disposed on European Union markets following specific waste collection and never end up in rubbish bins.**

Dimensions Drawings

Dimensions

Front, Side and Rear View

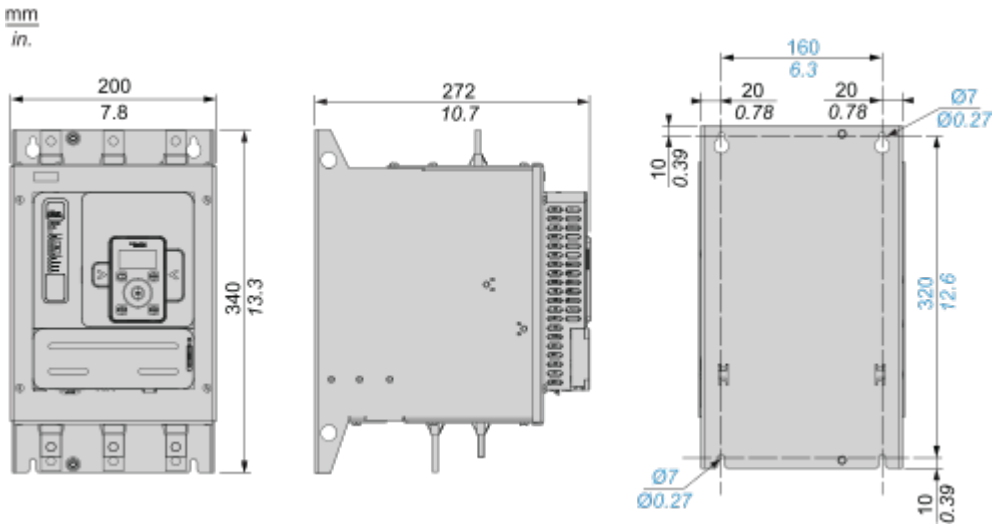

Connections and Schema

Power Connections

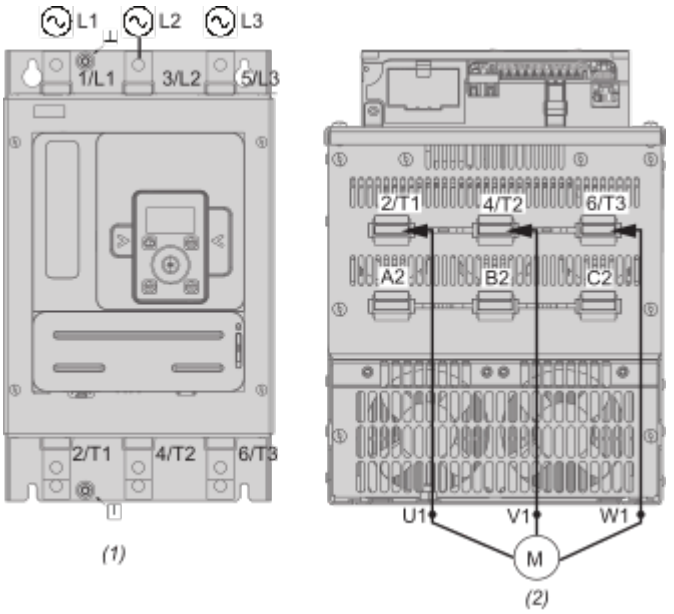

(1) : Mains side
(2) : Motor side
1/L1, 3/L2, 5/L3 : Mains supply inputs
2/T1, 4/T2, 6/T3 : Outputs to motor
A2, B2, C2 : Soft starter bypass

Connection in line, with line contactor, no bypass, type 1 or 2 coordination, non - reversing, 2-wire or 3-wire control

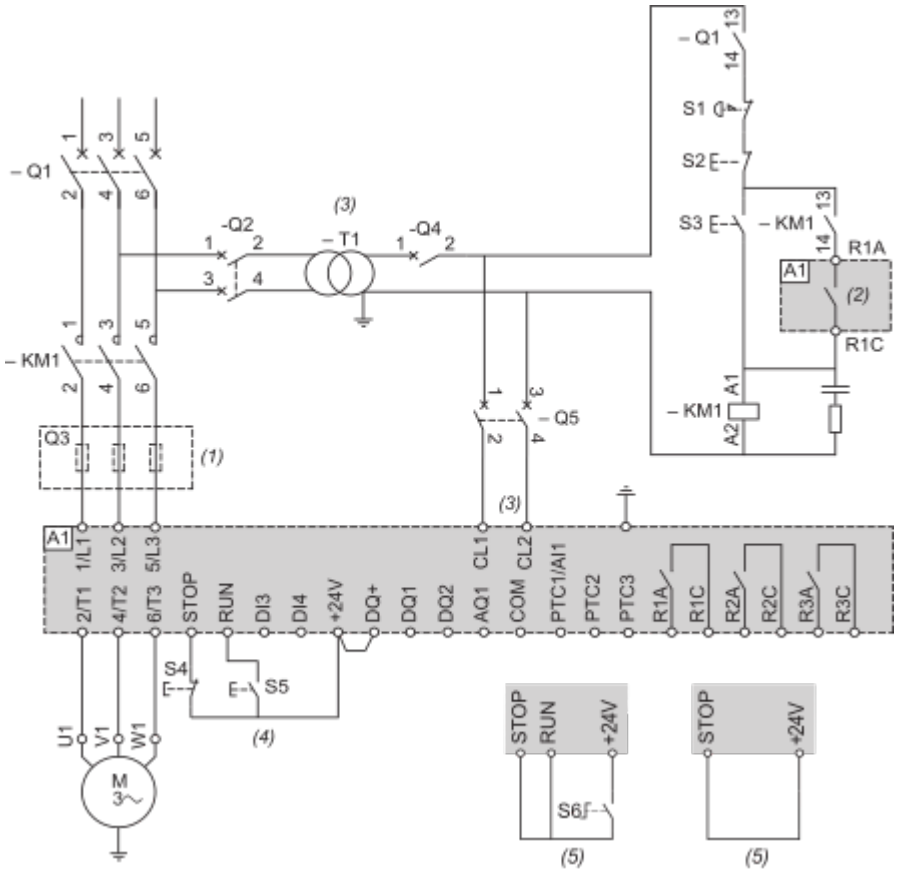

(1) : Installation of additional fast-acting fuses to upgrade to type 2 coordination according to IEC 60947–4–2.
(2) : Take into account the electrical characteristics of the relays (Control Terminal Characteristics).
(3) : The transformer must supply 110...230 VAC +10% — 15%, 50/60Hz.
(4) : RUN and STOP Management (3-wire control).
(5) : RUN and STOP Management (2-wire control).

Connection in line, with line and bypass contactor, freewheel or controlled stop, type 1 or 2 coordination, non reversing, 2-wire or 3-wire

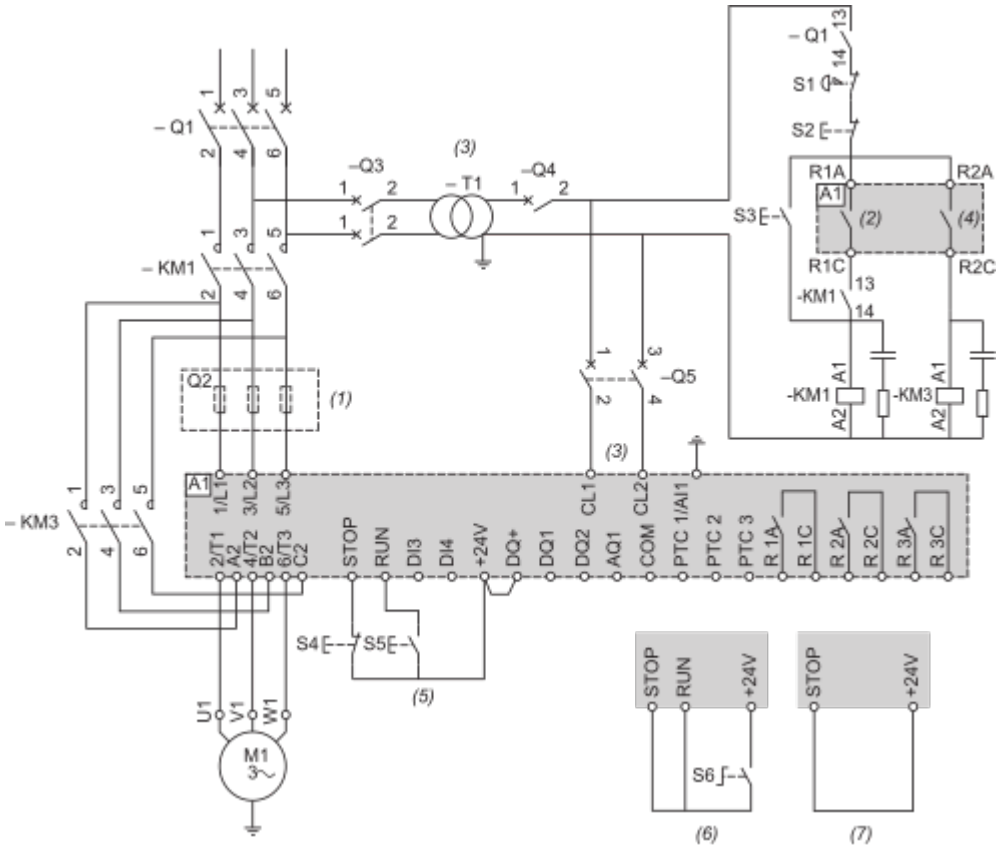

(1) : Installation of additional fast-acting fuses to upgrade to type 2 coordination according to IEC 60947–4–2.
(2) : Take into account the electrical characteristics of the relays (Control Terminal Characteristics).
(3) : The transformer must supply 110...230 VAC +10% – 15%, 50/60Hz.
(4) : Take into account the electrical characteristics of the relays, especially when connecting to high rating contactor (Control Terminal Characteristics).
(5) : RUN and STOP Management (3-wire control).
(6) : RUN and STOP Management (2-wire control).
(7) : PC or PLC control

Connection inside the delta, with line and bypass contactor, type 1 and 2 coordination, non reversing, 2 wire or 3 wire

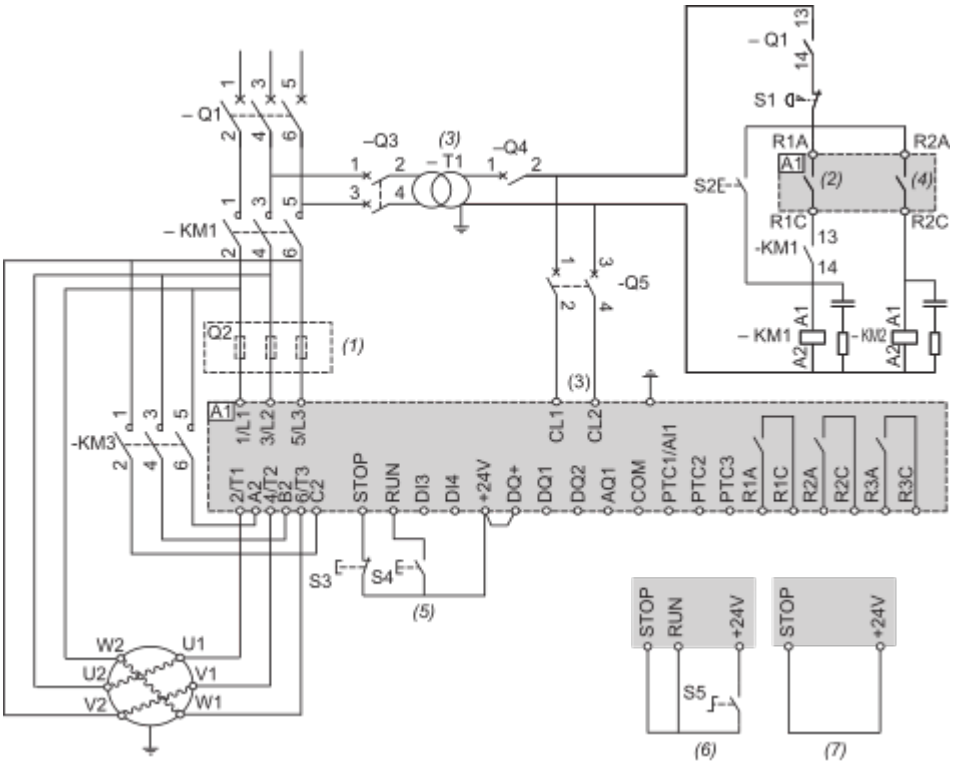

(1) : Installation of additional fast-acting fuses to upgrade to type 2 coordination according to IEC 60947–4–2.
(2) : Take into account the electrical characteristics of the relays (Control Terminal Characteristics).
(3) : The transformer must supply 110...230 VAC +10% – 15%, 50/60Hz.
(4) : Take into account the electrical characteristics of the relays, especially when connecting to high rating contactor (Control Terminal Characteristics).
(5) : RUN and STOP Management (3-wire control).
(6) : RUN and STOP Management (2-wire control).
(7) : PC or PLC control

Control block wiring diagram

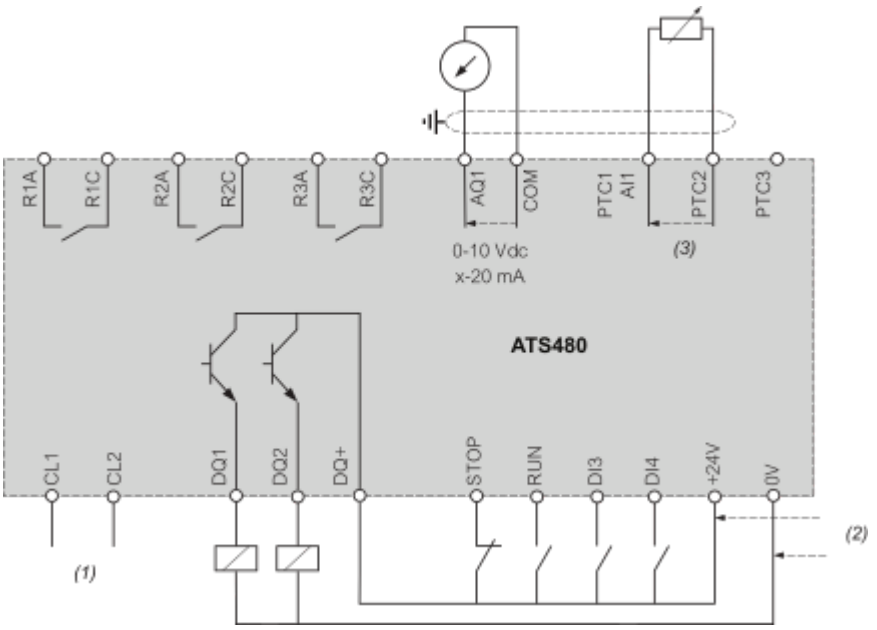

(1) : Control power supply 110-230 VAC
(2) : External supply 24 VDC
(3) : 2 Wires PTC/PT100
R1A, R1C, R3A, R3C : Sequence relay
R2A, R2C : End of start
STOP, RUN, DI3, DI4 : Digital inputs
AQ1 : Analogue output
PTC1/AI1, PTC2, PTC3 : PTC or PT100 connection
DQ1, DQ2, DQ+ : Digital outputs

Mounting and Clearance

Mounting Position

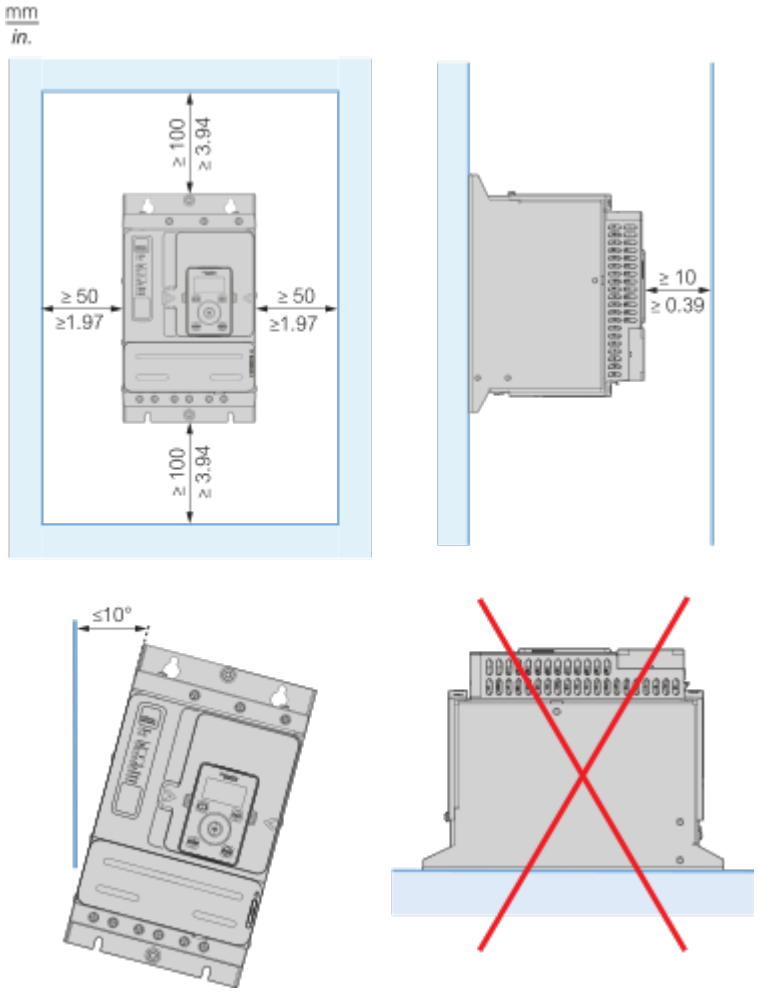

Technical Illustration

Dimensions

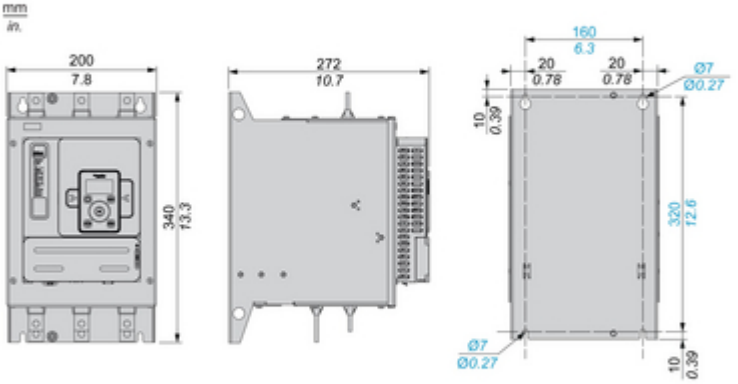

Technical Illustration

Wiring diagram

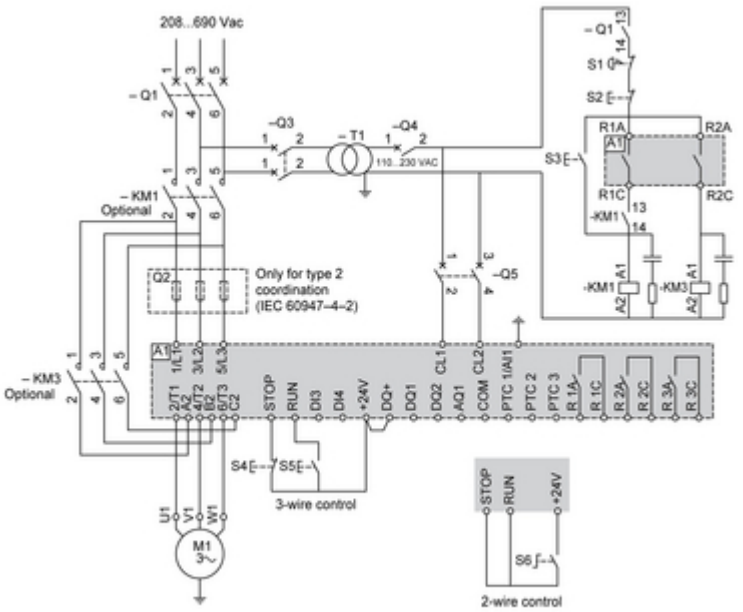

Image of product / Alternate images

Alternative

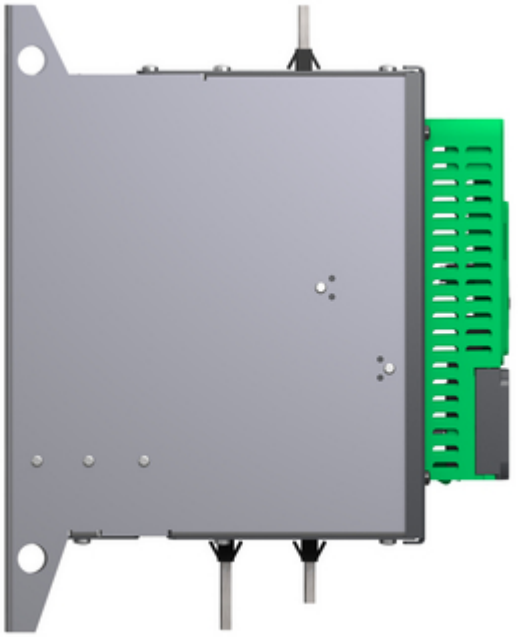

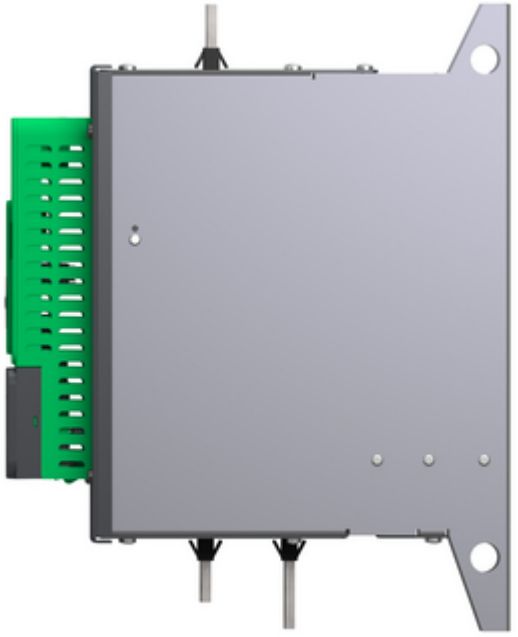

1/L1
3/L2
5/L3
Schneider Electric

1/L1
3/L2
5/L3
Schneider Electric

2/T1
4/T2
6/T3
A2
B2
C2

1/L1
3/L2
5/L3

1/L1
3/L2
5/L3
Schneider Electric
2/T1
4/T2
6/T3