Product data sheet

Specifications

Variable speed drive, Altivar HVAC ATH200, ATH230, 0.37kW, 0.5hp, 200 to 240V, 3 phase, IP20

ATH230U04M3

Product availability: Stock - Normally stocked in distribution facility

Main

Range of Product	Altivar HVAC ATH200
Product Specific Application	HVAC
Product or Component Type	Variable speed drive
Variant	Standard version
Device short name	ATH230
Product destination	Asynchronous motors Synchronous motors
Mounting Mode	Cabinet mount
IP Degree of Protection	IP20
Phase	3 phase
[Us] rated supply voltage	200...240 V - 15...10 %
Relative symmetric mains voltage tolerance	10 %
Supply frequency	50...60 Hz - 5...5 %
Relative symmetric network frequency tolerance	5 %
nominal output current	3.3 A
Maximum transient current	3.7 A
Motor power kW	0.37 kW
Maximum Horse Power Rating	0.5 hp
Safety Function	STO (safe torque off)
Safety level	SIL 3 IEC 61508 PL = e ISO 13849-1
EMC filter	Without EMC filter
Communication port protocol	Modbus serial BACnet MS/TP
Option card	Communication module BACnet IP

Complementary

Apparent power	1.2 kVA at 240 V
Power dissipation in W	27 W
Discrete input number	7
Discrete input type	STO safe torque off, 24 V DC1.5 kOhm DI1...DI6 logic inputs, 24 V DC 30 V) DI5 programmable as pulse input 0…30 kHz, 24 V DC 30 V)

Price is “List Price” and may be subject to a trade discount – check with your local distributor or retailer for actual price.

Disclaimer: This documentation is not intended as a substitute for and is not to be used for determining suitability or reliability of these products for specific user applications

Discrete input logic	Positive logic (source) Negative logic (sink)
[Us] rated supply voltage	24 V DC
Discrete output number	1
Discrete output type	Open collector DQ+ 0…1 kHz 30 V DC 100 mA Open collector DQ- 0…1 kHz 30 V DC 100 mA
Analogue input number	3
Analogue input type	AI1 voltage 0...10 V DC 30 kOhm 10 bits AI2 bipolar differential voltage +/- 10 V DC 30 kOhm 10 bits AI3 current 0...20 mA (or 4-20 mA, x-20 mA, 20-x mA or other patterns by configuration) 250 Ohm 10 bits
Analogue output number	1
Analogue output type	Software-configurable current AQ1 0...20 mA 800 Ohm 10 bits Software-configurable voltage AQ1 0...10 V DC 470 Ohm 10 bits
Relay output number	2
Relay output type	Configurable relay logic R1A 1 NO 100000 cycles Configurable relay logic R1B 1 NC 100000 cycles Configurable relay logic R1C Configurable relay logic R2A 1 NO 100000 cycles Configurable relay logic R2C
Maximum switching current	Relay output R1A, R1B, R1C resistive, cos phi = 1 3 A 250 V AC Relay output R1A, R1B, R1C resistive, cos phi = 1 3 A 30 V DC Relay output R1A, R1B, R1C, R2A, R2C inductive, cos phi = 0.4 7 ms 2 A 250 V AC Relay output R1A, R1B, R1C, R2A, R2C inductive, cos phi = 0.4 7 ms 2 A 30 V DC Relay output R2A, R2C resistive, cos phi = 1 5 A 250 V AC Relay output R2A, R2C resistive, cos phi = 1 5 A 30 V DC
Minimum switching current	Relay output R1A, R1B, R1C, R2A, R2C 5 mA 24 V DC
Physical interface	2-wire RS 485
Connector Type	RJ45
Method of access	Server Modbus serial Subordinate BACnet MS/TP
Transmission Rate	4800 bps, 9600 bps, 19200 bps, 38.4 Kbps 9.6, 19.2, 38.4, 76.8 kbit/s
Transmission frame	RTU MS/TP
Number of addresses	0…247 0…127
Data format	8 bits, configurable odd, even or no parity 1or 2 stop
Type of polarization	No impedance
Line current	3.6 A 200 V 3.0 A 240 V
Prospective line Isc	5 kA
Output frequency	0.599 kHz
Output voltage	<= power supply voltage
Switching frequency	2...16 kHz adjustable 4...16 kHz with derating
nominal switching frequency	4 kHz
4 quadrant operation possible	True
Asynchronous motor control profile	Voltage/frequency ratio, 5 points Flux vector control with sensor, standard Voltage/frequency ratio - Energy Saving, quadratic U/f Flux vector control without sensor - Energy Saving Voltage/frequency ratio, 2 points

Synchronous motor control profile	Vector control without sensor
Acceleration and deceleration ramps	Linear U S CUS Ramp switching Acceleration/deceleration ramp adaptation Acceleration/deceleration automatic stop with DC injection
Motor slip compensation	Automatic whatever the load Adjustable 0...300 % Not available in voltage/frequency ratio (2 or 5 points)
Braking to standstill	By DC injection
Brake chopper integrated	True
Standards	IEC 61800-5-1 IEC 61800-3 UL 508C IEC 61800-3 environments 1 category C2 IEC 61800-3 environments 2 category C3 IEC 60721-3 IEC 61508 IEC 13849-1
Product certifications	CULus CE UKCA KC EAC ATEX RCM
Marking	CULus CE UKCA KC EAC ATEX RCM
With safety function Safe torque off (STO)	True
Protection type	Line supply phase loss drive Motor phase loss motor Line supply overvoltage and undervoltage drive Overheating protection drive Overload motor With PTC probes motor Short-circuit between motor phases drive Overcurrent between output phases and earth drive
Width	2.8 in (72 mm)
Height	5.6 in (143 mm)
Depth	5.04 in (128 mm)
Product Weight	2.0 lb(US) (0.9 kg)
Function Available	Fire mode Run permissive PID controller Additional PID Damper control Underload detection for broken belt

Environment

Pollution degree	2
Operating altitude	<= 3280.84 ft (1000 m) without derating 3280.84...9842.52 ft (1000...3000 m) with current derating 1 % per 100 m
Operating position	Vertical +/- 10 degree

Electromagnetic compatibility	Electrostatic discharge immunity test level 3 conforming to IEC 61000-4-2 Radiated radio-frequency electromagnetic field immunity test level 3 conforming to IEC 61000-4-3 Electrical fast transient/burst immunity test level 4 conforming to IEC 61000-4-4 1.2/50 µs - 8/20 µs surge immunity test level 3 conforming to IEC 61000-4-5 Conducted radio-frequency immunity test level 3 conforming to IEC 61000-4-6 Voltage dips and interruptions immunity test conforming to IEC 61000-4-11
Environmental class (during operation)	Class 3C3 according to IEC 60721-3-3 Class 3S2 according to IEC 60721-3-3
Maximum acceleration under shock impact (during operation)	150 m/s² at 11 ms
Maximum acceleration under vibrational stress (during operation)	10 m/s² at 13...200 Hz
Relative humidity	5…95 % without condensation or dripping water EN/IEC 60068-2-3
Overvoltage category	III
Ambient air transport temperature	-13…158 °F (-25…70 °C)
Ambient air temperature for operation	14…122 °F (-10…50 °C) without derating 122…140 °F (50…60 °C) with derating factor
Ambient Air Temperature for Storage	-13…158 °F (-25…70 °C)

Ordering and shipping details

Category	US1CP4D22200
Discount Schedule	CP4D
GTIN	3606487882305
Returnability	Yes
Country of origin	ID

Packing Units

Unit Type of Package 1	PCE
Nbr. of units in pkg.	1
Package 1 Height	4.528 in (11.500 cm)
Package 1 Width	7.283 in (18.500 cm)
Package 1 Length	7.480 in (19.000 cm)
Package weight(Lbs)	2.482 lb(US) (1.126 kg)
Unit Type of Package 2	P06
Number of Units in Package 2	45
Package 2 Height	29.528 in (75.000 cm)
Package 2 Width	23.622 in (60.000 cm)
Package 2 Length	31.496 in (80.000 cm)
Package 2 Weight	140.368 lb(US) (63.670 kg)

Contractual warranty

Warranty (in months)	18

Environmental Data

Schneider Electric aims to achieve Net Zero status by 2050 through supply chain partnerships, lower impact materials, and circularity via our ongoing “Use Better, Use Longer, Use Again” campaign to extend product lifetimes and recyclability.

Environmental Data explained

How we assess product sustainability

Environmental footprint

Total lifecycle Carbon footprint	**504 kg CO2 eq.**
Carbon footprint of the manufacturing phase [A1 to A3]	**26 kg CO2 eq.**
Carbon footprint of the distribution phase [A4]	**0.1 kg CO2 eq.**
Carbon footprint of the installation phase [A5]	**0.8 kg CO2 eq.**
Carbon footprint of the use phase [B2, B3, B4, B6]	**476 kg CO2 eq.**
Carbon footprint of the end-of-life phase [C1 to C4]	**1 kg CO2 eq.**
Environmental Disclosure	**Product Environmental Profile**

Use Better

Materials and Substances

Packaging made with recycled cardboard	**Yes**
Packaging without single use plastic	**Yes**
SCIP Number	**54d9b8a2-f08e-417d-86c3-640171f02af0**
EU RoHS Directive	**Compliant By Exemption**
REACh Regulation	**Reference contains Substances of Very High Concern above the threshold**
California proposition 65	**WARNING: This product can expose you to chemicals including: Lead and lead compounds, which is known to the State of California to cause cancer and birth defects or other reproductive harm. For more information go to www.P65Warnings.ca.gov**

Use Longer

Lifetime extension

Repair	**No**

Use Again

Repack and remanufacture

Recyclability potential, in %	**56**
Circularity Profile	**End of Life Information**
Take-back	**No**
WEEE Label	**The product must be disposed on European Union markets following specific waste collection and never end up in rubbish bins.**

Dimensions Drawings

Dimensions

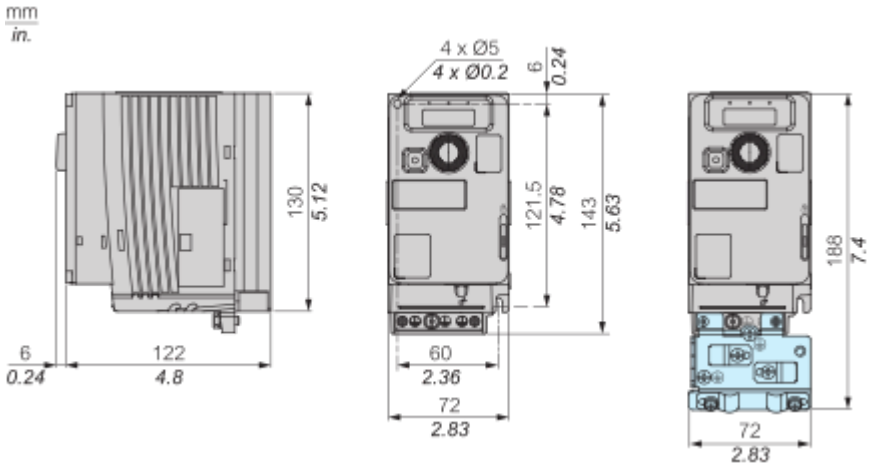

Mounting and Clearance

Clearances and Mounting Position

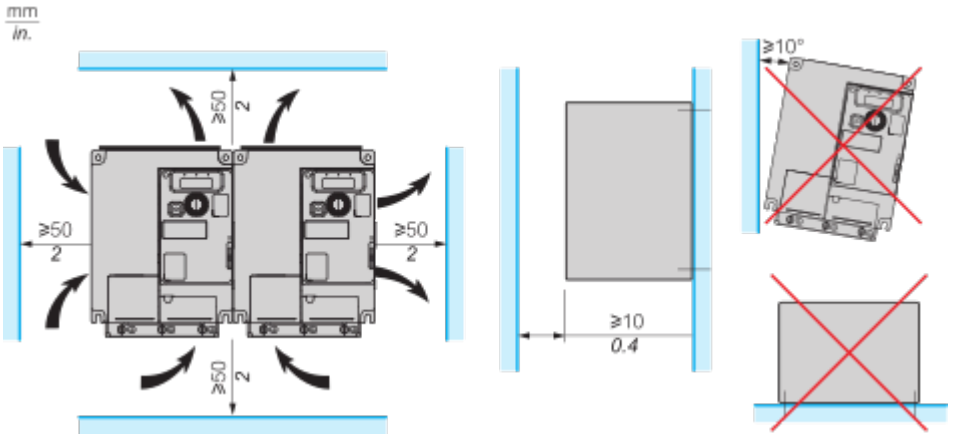

Mounting Type A: Individual with Ventilation Cover

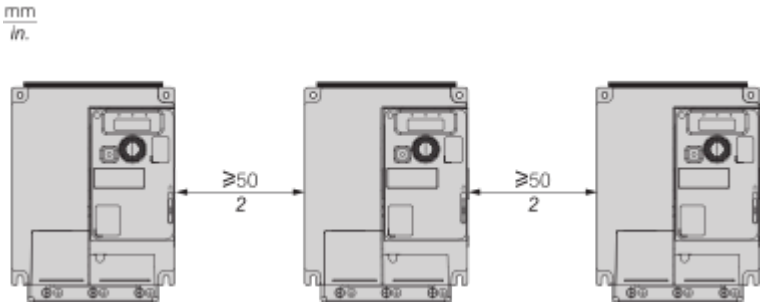

Mounting Type B: Side by Side, Ventilation Cover Removed

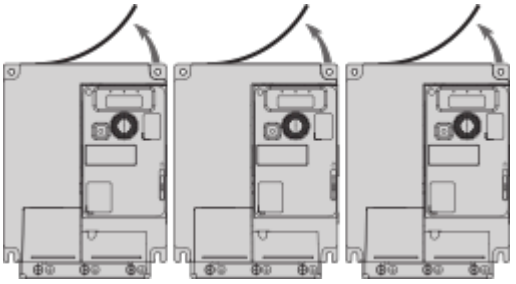

Mounting Type C: Individual, Ventilation Cover Removed

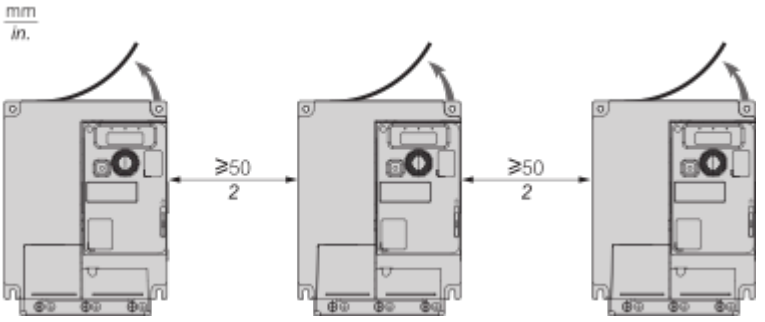

Connections and Schema

Control Block Wiring Diagram

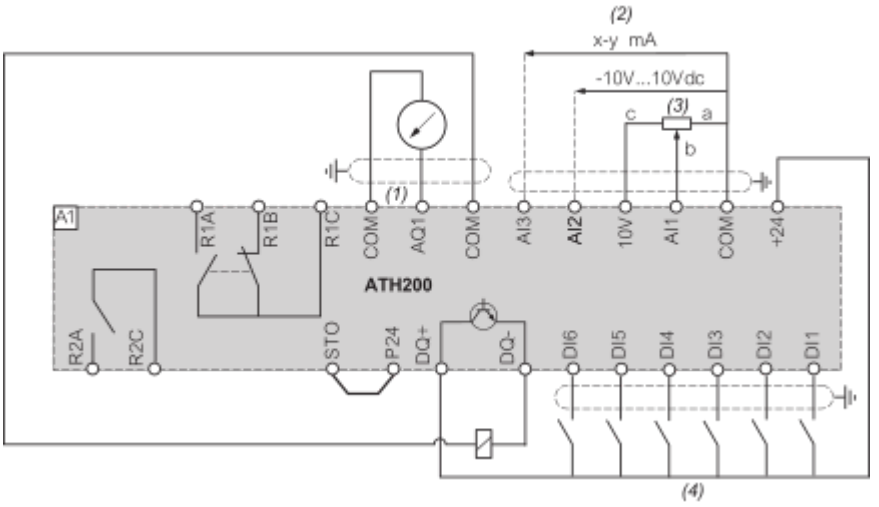

(1) : Analog output
(2) : Analog inputs
(3) : Potentiometer SZ1RV1202 (2.2 kΩ) or similar (10 kΩ maximum)
(4) : Digital Inputs

Single or Three-phase Power Supply - Diagram With Line Contactor

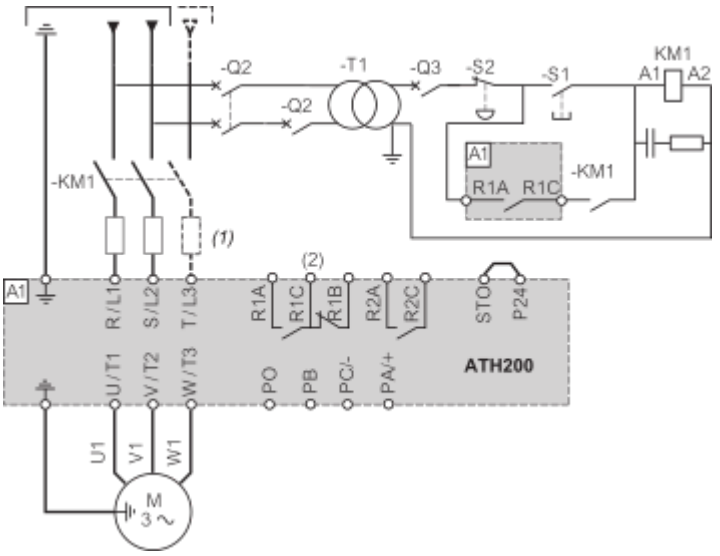

(1) : Line choke (if used)
(2) : Use relay output R1 set to operating state Fault to switch Off the product once an error is detected

Single or Three-phase Power Supply - Diagram With Downstream Contactor

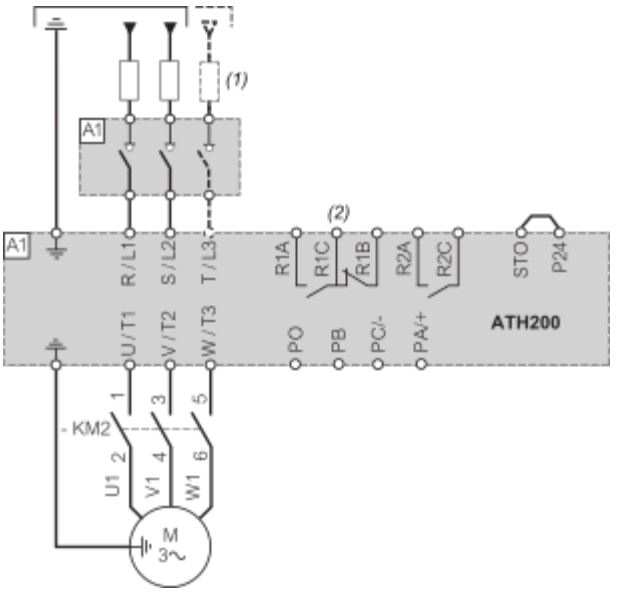

(1) : Line choke (if used)
(2) : Use relay output R1 set to operating state Fault to switch Off the product once an error is detected

Sensor Connection

It is possible to connect either 1 sensor on terminals AI2 or AI3 or DI6.

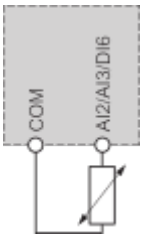

Performance Curves

Derating Curves

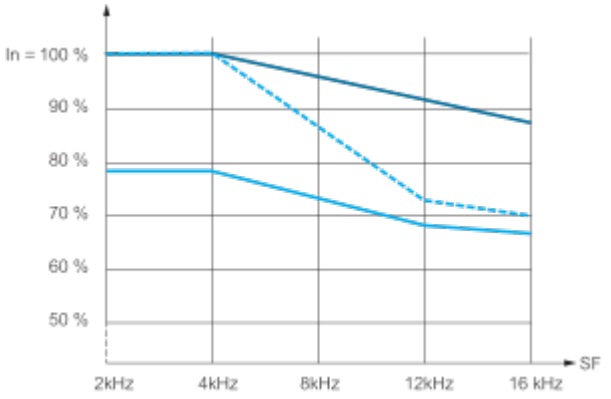

40 °C (104 °F) - Mounting type A, B and C
50 °C (122 °F) - Mounting type C
60 °C (140 °F) - Mounting type C
In : Nominal Drive Current
SF : Switching Frequency

Technical Illustration

Dimensions

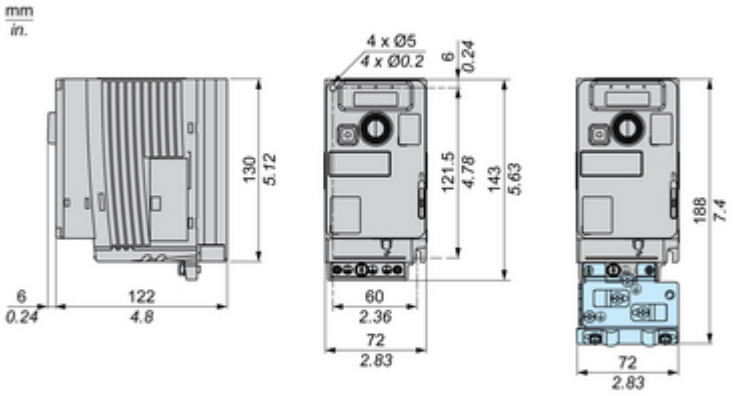

Technical Illustration

Wiring diagram

Single phase or Three phase power supply

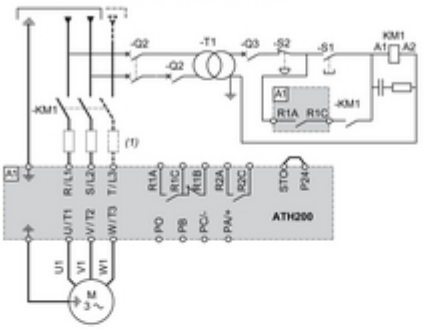

(1) Line choke (if used)

Control Block Wiring Diagram

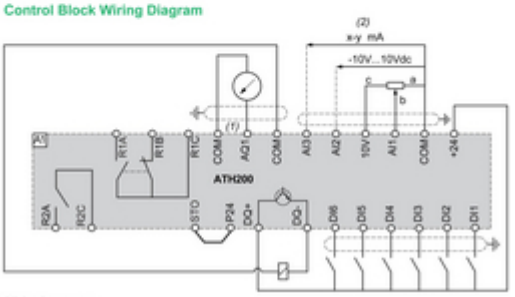

(1) Analog output
(2) Analog inputs

Offer Marketing Illustration

Product benefits / Features

Offer Marketing Illustration

Product benefits / Features

Technical illustration

Product Installation

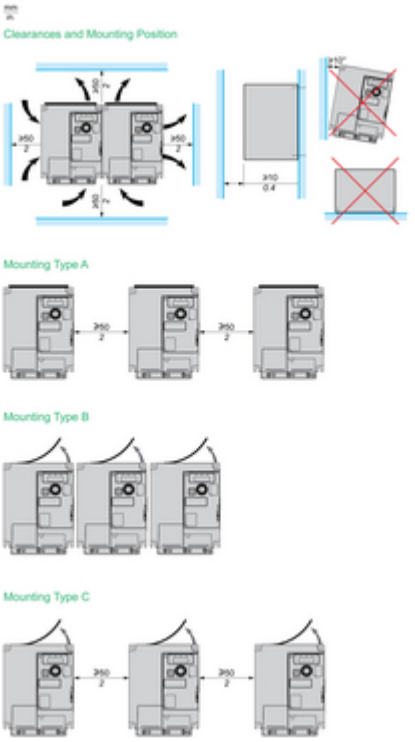

Image of product / Alternate images

Alternative

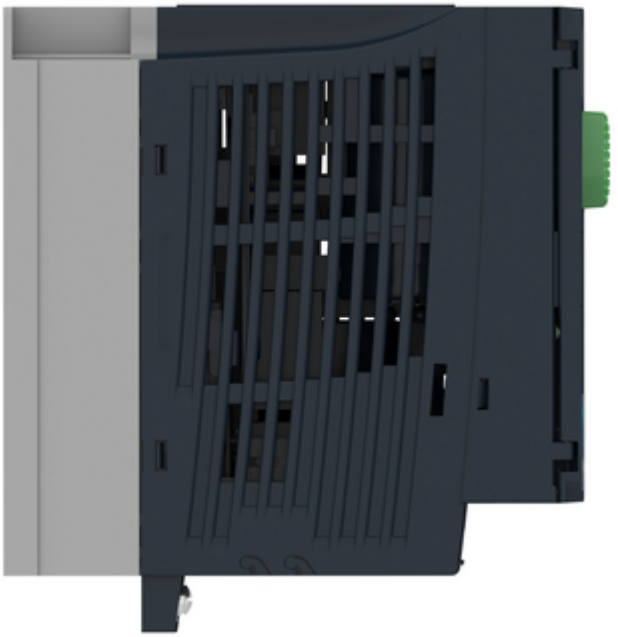

Ref
Mon
Conf
Value
Unit
ESC
Altivar
HVAC
Schneider
Electric
Schneider
Electric