Catalog | October 2022

Modicon ABE7 / ABE9

Telefast Pre-wired system

Modicon ABE7 IP20 connection sub-bases

Modicon ABE9 IP67 passive splitter boxes

www.se.com

Life Is On | Schneider Electric

Modicon

Discover Modicon

Edge control for Industrial IoT

Modicon IIoT-native edge controllers manage complex interfaces across assets and devices or directly into the cloud, with embedded functional safety and cybersecurity. Modicon provides performance and scalability for a wide range of industrial applications up to high-performance multi-axis machines and high-available redundant processes.

Explore our offer

- Modicon HVAC Controllers
- Modicon PLC
- Modicon Motion Controllers
- Modicon PAC
- Modicon I/O
- Modicon Networking
- Modicon Power Supply
- Modicon Wiring
- Modicon Safety

Life Is On | Schneider Electric

Quick access to product information

Get technical information about your product

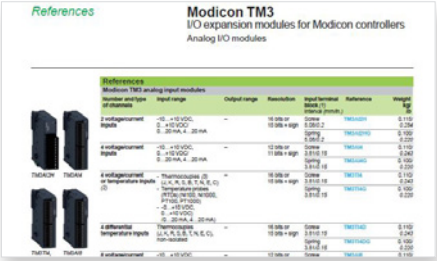

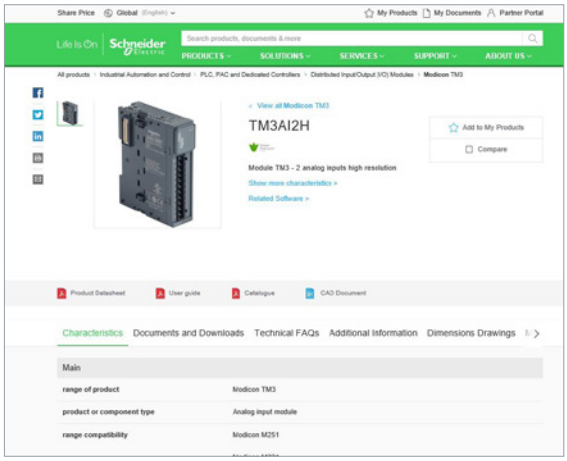

Each commercial reference presented in a catalog contains a hyperlink. Click on it to obtain the technical information of the product:

- Characteristics, Dimensions and drawings, Mounting and clearance, Connections and schemas, Performance curves
- Product image, Instruction sheet, User guide, Product certifications, End of life manual

Find your catalog

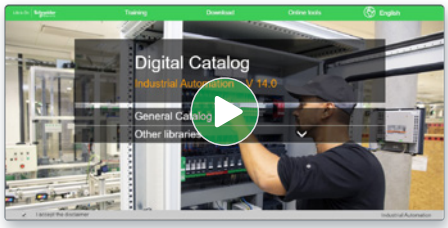

> With just 3 clicks, you can access the Industrial Automation and Control catalogs, in both English and French

> Consult digital automation catalogs at Digi-Cat Online

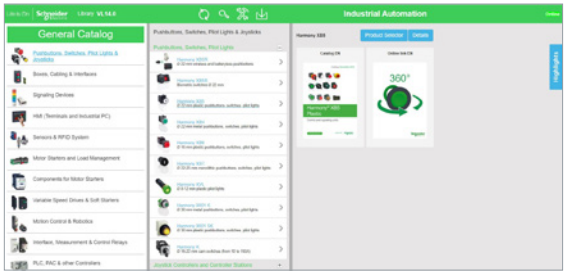

- Up-to-date catalogs
- Embedded product selectors,360° pictures
- Optimized search by commercial references

Select your training

> Find the right Training for your needs on our Global website

> Locate the training center with the selector tool, using this link

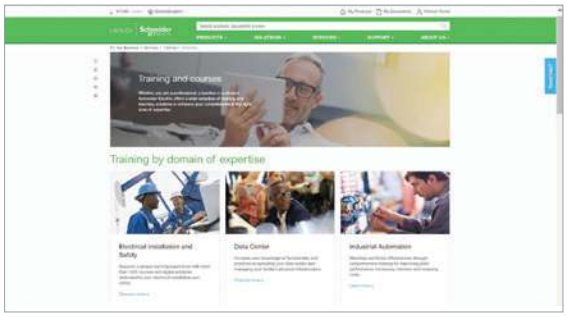

Life Is On | Schneider Electric

General content

Telefast Pre-wired System

■ **Modicon ABE7 connection sub-bases (IP 20) for**
- > **Modicon M221 Book logic controllers,**
- > **Modicon TM3 I/O expansion modules,**
- > **Modicon X80 I/O expansion modules,**
- > **Modicon Premium automation platforms,**
- > **Modicon Quantum automation platforms,**
- > **Modicon TSX Micro Compact/modular PLC**
- > **Modicon STB (Distributed I/O solution)**

□ Presentation ..... page 2

□ Selection guides of connection sub-bases:
- Discrete inputs or outputs, Outputs for solid state and/or electromechanical relays sub-bases ..... page 10
- Discrete outputs sub-bases ..... page 12
- Analog and application-specific sub-bases ..... page 14

□ References
- Passive connection sub-bases for discrete signals ..... page 16
- Adapter sub-bases with fixed relays and removable terminal blocks ... page 17
- Adapter sub-bases with plug-in relays ..... page 18
- Connection sub-bases for counter and analog channels ..... page 19
- Cordsets for connection ..... page 20
- Cabled connectors for Modicon Quantum I/O modules ..... page 21
- Accessories ..... page 22
- Plug-in solid state/electromechanical relays ..... page 23

□ Combinations
- sub-bases for Modicon M221 logic controllers and Modicon TM3 modules ..... page 24
- sub-bases for Modicon X80 I/O modules ..... page 26
- sub-bases for Modicon Premium platform ..... page 30
- sub-bases for Modicon Quantum platform ..... page 34
- sub-bases for TSX Micro PLC ..... page 36
- sub-bases for Modicon STB I/O modules ..... page 38

■ **Modicon ABE9 IP 67 passive splitter boxes (IP 67)**

□ Selection guide ..... page 40

□ Presentation ..... page 42

□ Description ..... page 42

□ References ..... page 43

■ **Index**

□ Product reference index ..... page 44

Telefast Pre-wired System

Modicon ABE7 connection sub-bases

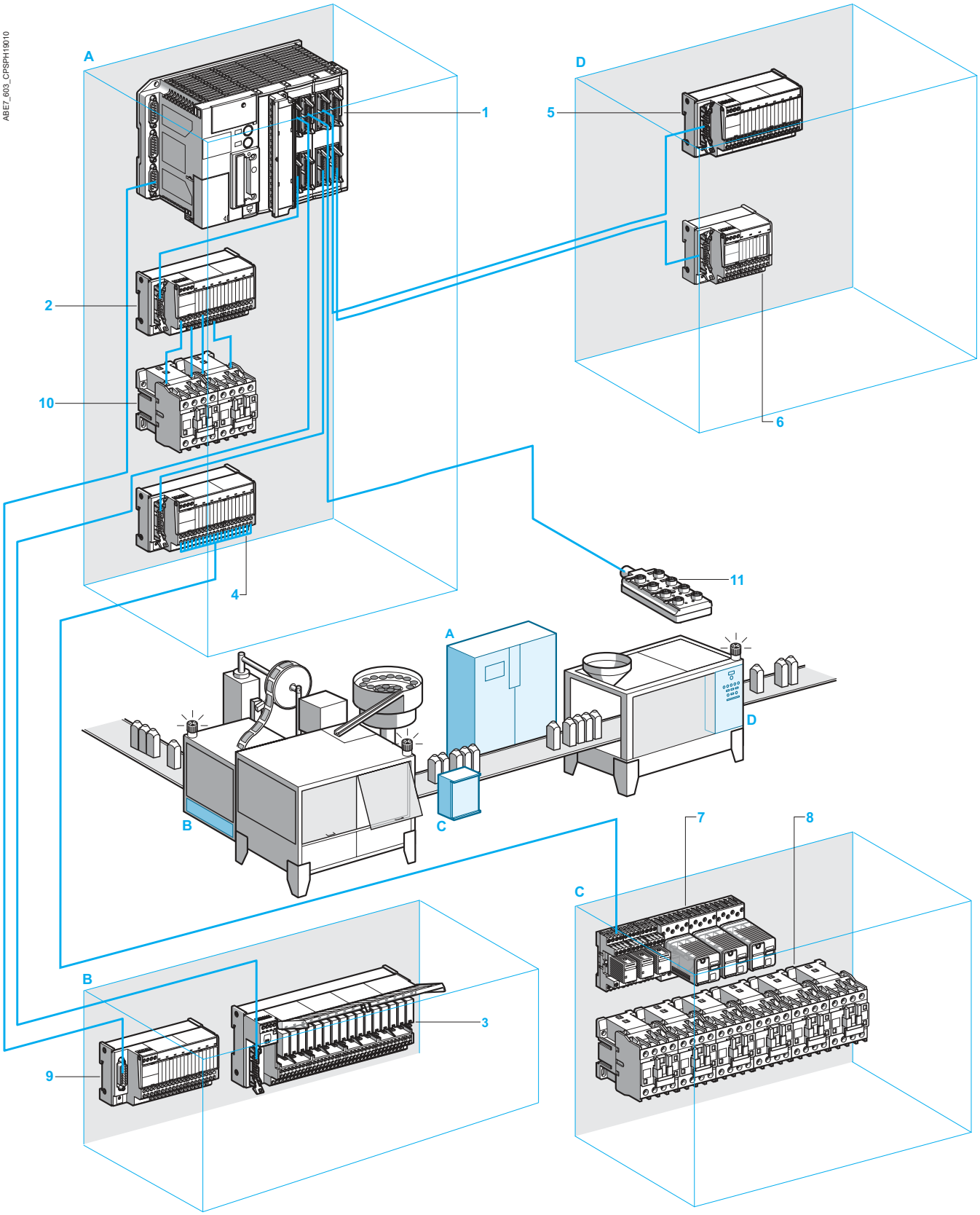

Selection guide
pages 10 to 15

References
pages 16

Telefast Pre-wired System
Modicon ABE7 connection sub-bases

General presentation

Telefast Pre-wired system is a set of products for rapid connection of I/O modules (24 V ⎓ discrete, analog, and counter) to operative parts. It acts as a substitute for screw terminal blocks, remotely locating and partly eliminating the single-wire connection.
The Telefast system only connects to channels that have HE 10 and SUB-D connectors or to standard terminal blocks with a cabled connector. It consists of connecting cables and interface sub-bases.
The relay and connection functions, with or without polarity distribution, considerably reduce wiring time and eliminate the risk of error.

Connections between the PLC and the operative part

Connection between the PLC and Telefast sub-bases

Telefast sub-bases connect directly via cables to all discrete I/O modules equipped with HE 10 connectors 1.
I/O modules not equipped with HE 10 connectors are connected to Telefast sub-bases by means of a cabled connector, which consists of a cable with conductors (AWG 22/0.34 mm^2 c.s.a.) connected to the standard terminal block at one end and to the HE 10 connectors at the other. These cabled connectors are available in 3 m *(9.84 ft)* lengths.

Connection between Telefast sub-bases and the operative part

The Telefast range is suitable for several types of connection found in control system devices.

■ **Connection of I/O located in the PLC cabinet A or nearby B**
Some sub-bases 2 enable two wires (signal and common) or three wires (signal, 24 V, 0 V) to be connected directly from sensors or preactuators 10 when these are installed in the same enclosure or very close by. They effectively eliminate all intermediate terminal blocks.
Other versions offer the possibility of adapting the voltage or current via plug-in relay sub-bases 3, or of connecting analog signals 9.
In cases where size is of prime importance D, fixed relay sub-bases **ABE7R16S111** 5 (125 mm/*4.92 in*. long) and passive sub-bases **ABE7H16R50** 6 (84 mm/*3.31 in.* long) reduce the required surface area by about 50% compared with standard products.

■ **Connection of I/O located outside the PLC cabinet C**
These sub-bases 4 fulfill the same function as traditional terminal blocks and connect connector leads from sensors or preactuators 7, 8.

■ **IP67 dust and damp-proof connections for enclosures** and **cabinets**
8-channel versions offer, in addition, the possibility of directly connecting **Modicon ABE9** dust and damp proof splitter boxes (see page 42) 11 for 8 sensors.

Telefast Pre-wired System
Modicon ABE7 connection sub-bases

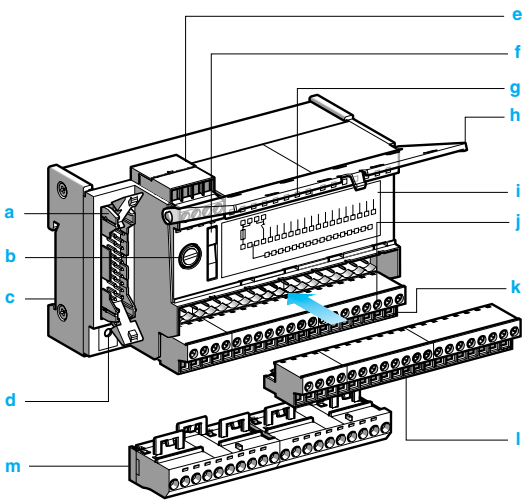

Description of a Telefast® connection sub-base

All connection sub-bases in the Telefast family have a standardized design and offer the common functions described below. Some of these functions are optional*.

- **a** 20-way HE10 connector
- **b** 24 V ⎓ power supply circuit fuse
- **c** DIN rail mounting
- **d** 24 V ⎓ display LED
- **e** 24 V ⎓ power supply terminal block *(1)*
- **f** Blade type isolator on 0 V ⎓
- **g** Channel indication LED*
- **h** User label-holder/cover
- **i** Wiring diagram
- **j** Test point test for ∅ 2.3 mm *(0.09 in.)* plug
- **k** Upper terminal block *(1)*
- **l** Lower terminal block *(1)*, offset by ½ step*
- **m** Additional snap-on terminal block equipped with 20 screw or spring terminals*

(1) Removable screw or spring type, according to reference, at 5.08 mm (0.2 in.) intervals.

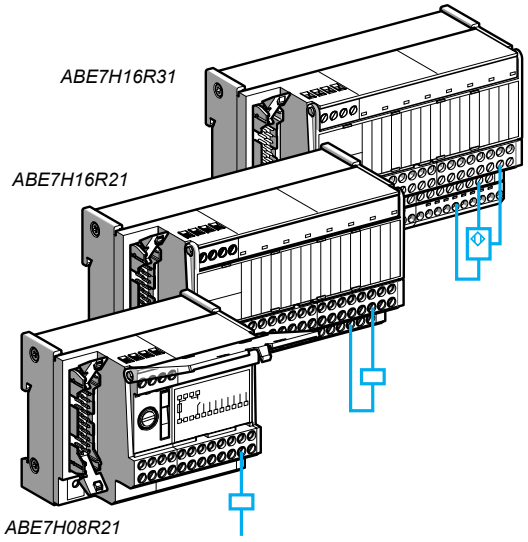

Passive connection sub-bases

Designed to simplify I/O connection to a PLC within a control panel, the range of passive sub-bases has the same functions as traditional terminal blocks to which they add, depending on the models: compact size, connection of proximity sensor commons (3-wire and type 2), LED indication, protected and isolated channels.
For high sales volume products, screw or spring connections are available (references ending with E).

Terminal block sub-bases

ABE7H16R11, **ABE7H16R10**: These products can be used to connect inputs or outputs. The commons are made on the device and brought into the sub-base by a single wire. The output terminals are on a single row.
The signal state for each channel can be indicated via an LED (**R11**) or not (**R10**). An ABE7BV20 terminal block can be added.

ABE7H20E000, **ABE7H20E100**, **ABE7H20E200**: These **economy** products are supplied with a direct connection cable for TSX Micro, Premium, or other PLCs using splitter sub-bases (**H20E**). The cable is available in various lengths. The output terminals are on 2 rows.

Compact sub-bases

ABE7H16R50: These products fulfill the same functions as the sub-bases above but they are almost half the size.
The output terminals are on 2 rows.

ABE7H16C10 and **ABE7H16C11**: These are **miniature** products. The signal state for each channel can be indicated via an LED (**C11**) or not (**C10**). The output terminals are on a single row. An ABE7BV20 terminal block can be added.

Universal sub-bases

ABE7H08R21 and **ABE7H16R20**: These sub-bases are used to connect I/O and all the commons.
The potential (0 V or 24 V ⎓), distributed over the row of screw terminals that allow the commons to be connected, is selected via a jumper. Both wires from the sensor or actuator can be connected to the sub-base. The output terminals are on 2 rows.
The signal state for each channel can be indicated via an LED (**R21**) or not (**R20**).

ABE7H16C21: This is a **miniature** product. The signal state for each channel can be indicated via an LED.

Selection guide
pages 10 to 15

References
pages 16

Passive connection sub-bases (continued)

Sub-bases for 2-wire sensors

ABE7H16R23: This product is identical to the **ABE7H16R21** sub-base but, in addition, enables connection of 2-wire type 2 sensors on TSX Micro and Premium PLCs, and numerical controllers (NUM). The output terminals are on 2 rows.

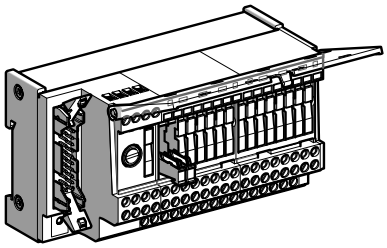

ABE7H16S21

Sub-bases for 3-wire sensors

ABE7H16R31: The 24 V and 0 V ⎓ signals are brought into the sub-base for each channel. The output terminals are on 3 rows. This function can also be achieved by adding an **ABE7BV20** to **ABE7H16R21** and **ABE7H16R20** sub-bases.
The signal state for each channel can be indicated via an LED.

ABE7H16C31: These are **miniature** products. They also enable connection of inputs equipped with 3-wire proximity sensors. The output terminals are on 3 rows.

Sub-base with isolator for each channel

ABE7H16S21: This product has the same function as the **ABE7H16R21** universal sub-base.
It also has a blade isolator for each channel.

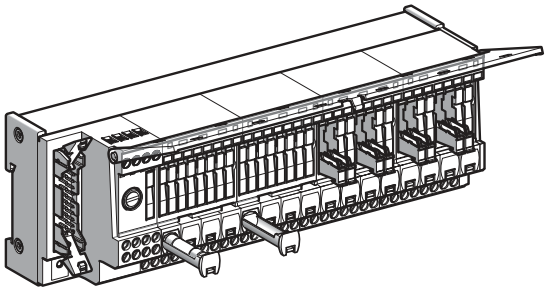

ABE7H16S43

Sub-bases with isolator and protection for each channel

ABE7H16S43: These products are used exclusively for connecting 24 V ⎓ **inputs**. Both wires are brought to the screw terminals on a single row.
Each channel has 2 blade isolators, attached together, to isolate the signal and its 24 V ⎓ power supply.
The 24 V ⎓ power supply to each channel is protected by a 5 x 20 fuse. A red LED indicates if the fuse has blown.
ABE7H16F43: These products are designed for connecting 24 V ⎓ **outputs**.
Both wires are brought to the screw terminals on a single row.
Each channel has 2 blade isolators, attached together, to isolate the signal and its 0 V common.

Electromechanical relay output sub-bases

Relay output sub-bases are designed to adapt both current and voltage signals. They also have the following functions, depending on the model: various contact combinations (1 NO, 1 C/O, 2 C/O), common potentials, channel protection by 5 x 20 fuse.
There are 3 ranges of sub-bases: fixed relay, plug-in relay, and high-performance.
For high sales volume products, screw or spring connections are available (references ending with E).

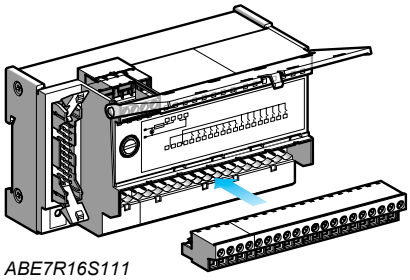

ABE7R16S111

Sub-bases with ixed relays and removable terminal blocks

ABE7R08S210, **ABE7R16S210**, and **ABE7R16S212** : These products are equipped with a fixed relay with integral NO contact, 10 mm *(0.394 in.)* wide. Their 5 A Ith characteristic must be derated according to the duty cycles used and the number of operations required.
They are available in 8- and 16-channel module formats. All the terminal blocks are removable.

ABE7R08S111 and **ABE7R16S111**: Almost 50% smaller than the standard sub-bases, these products have a fixed relay with integral NO contact, 5 mm *(0.197 in.)* wide. Their 2 A Ith characteristic must be derated according to the duty cycles used and the number of operations required. They are available in 8- and 16-channel module formats. All the terminal blocks are removable.

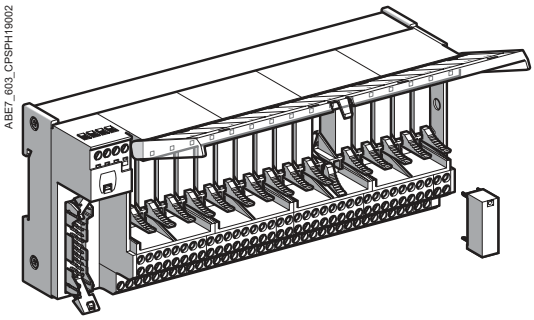

ABE7R16T2●●

Electromechanical relay output sub-bases (continued)

Plug-in relay sub-bases

ABE7P16T210, **ABE7P16T230**, **ABE7P16T214**, **ABE7P16T215**, **ABE7R16T210**, **ABE7R16T212**, and **ABE7R16T230:** These products may or may not be equipped with plug-in relays, with integral NO or C/O contact, 10 mm *(0.394 in.)* wide. Their 5 A Ith characteristic must be derated according to the duty cycles used and the number of operations required. They are available as 16-channel modules only.

It is possible to combine **ABR7S21** and **ABR7S23** electromechanical relays and **ABS7SC2E** and **ABS7SA2M** solid state relays on the same sub-base. Some sub-bases, not equipped with relays, are offered with 5 x 20 fuse protection for each channel.

ABE7P16T111, **ABE7R16T111**, and **ABE7R16M111**: These **miniature** products use plug-in relays, 5 mm *(0.197 in.)* wide, with integral NO contact, rated up to 5 A. products are pre-equipped with relays (**R**) or not (**P**). They can accept both electromechanical and solid state relays.
The **ABE7R16M111** sub-base offers two connection methods, which make it possible to connect both inputs and outputs and obtain 8 inputs (passive connection) and 8 outputs (active relay connection). The signal state for each channel can be indicated via an LED. The terminals are on one row and the commons are brought in in groups of 4. The sub-base is supplied with a relay extractor; this accessory is also available as a spare part.

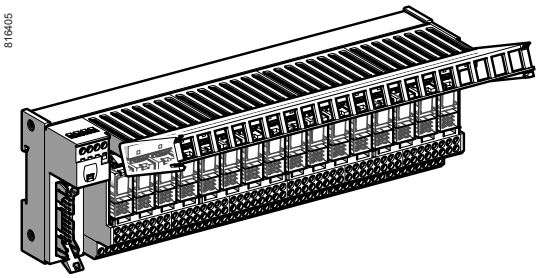

ABE7R16T3●●

High-performance sub-bases for plug-in relays

ABE7P16T330, **ABE7P16T334**, **ABE7P16T318**, **ABE7R16T330**, and **ABE7R16T370**: These products may or may not be equipped with plug-in relays, with integral 1 C/O or 2 C/O contacts, 12 mm *(0.472 in.)* wide. Their 8 A Ith characteristic must be derated according to the duty cycles used and the number of operations required.
The relays are equipped with reinforced Faston type clips for easy attachment.

They are available in 8- and 16-channel module formats. It is possible to combine **ABR7S33** electromechanical relays, **ABS7SC3E** solid state relays **ABS7SA3M**, and the **ABE7ACC21** continuity block on the same sub-base. Some sub-bases, not equipped with relays, are offered with 5 x 20 fuse protection and isolation for each channel.

Connections

These relay sub-bases can be connected according to three possible schemes: volt-free, contact common, and common on both poles.

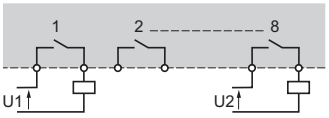

Volt-free

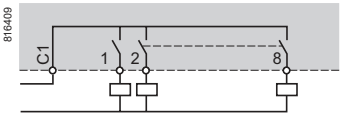

Common contact

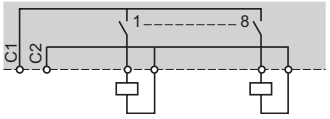

Common on both poles

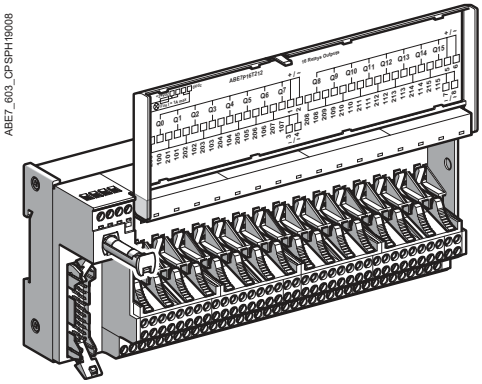

ABE7P16T215

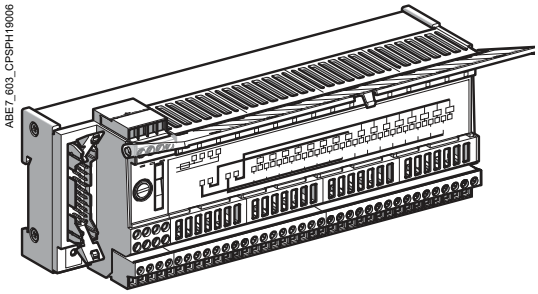

ABE7S16E2B1

Solid state input or output sub-bases

Solid state input or output sub-bases are designed to adapt both current and voltage signals. They can be used to interface either inputs or outputs. Their technology enables high-speed signal switching, while maintaining a high level of electrical durability. For high sales volume products, screw or spring connections are available (references ending with E).

Input adapter sub-bases

ABE7S16E2B1, **ABE7S16E2E0**, **ABE7S16E2F0**, and **ABE7S16E2M0** sub-bases equipped with solid state channels: These sub-bases enable sensors with different voltages to be connected (24 V ⎓ to 230 V ∿ depending on the reference).
These products provide electrical isolation for the various power supply inputs.
They are available as 16-channel modules only and the terminal blocks are removable.

ABE7P16F310 and **ABE7P16F312** sub-bases for plug-in solid state relays: These sub-bases enable sensors with different voltages to be connected (24 V ⎓ to 230 V ∿), either on each channel or on each group of 8 channels.
They are available as 16-channel modules only.
The solid state relays are available separately. It is also possible to equip the sub-bases with electromechanical relays (please contact our Customer Care Center).

Output adapter sub-bases

ABE7S16S2B0 and **ABE7S16S1B2**: These sub-bases enable actuators to be connected at 24 V ⎓. The outputs are not isolated. The output current is either 0.5 or 2 A per channel depending on the products.
The occurrence of overloads or short-circuits on the outputs can be transmitted to the PLC to be managed by program. These “fault signal” functions can only be used with TSX Micro and Premium PLCs, or with any other PLCs that have protected outputs.
They are available in 8- and 16-channel module formats, and the terminal blocks are removable.

Plug-in solid state relays
ABS7S plug-in relays are not available mounted directly on the sub-bases. They have to be ordered separately.
These relays are available for two power levels:
5 V ⎓ to 240 V ∿/0.5 A, 10 mm *(0.394 in.)* wide. These are for mounting on **ABE7P16T210**, **BE7P16T230**, **ABE7P16T214**, and **ABE7P16T215 sub-bases.** 5 V ⎓ to 240 V ∿ /1.5 and 2 A, 12 mm *(0.472 in.)* wide. These are for mounting on **ABE7P16T330**, **ABE7P16T334**, and **ABE7P16T318** sub-bases.
It is possible to combine electromechanical relays, solid state relays, and continuity blocks on the same sub-base.
They are available as 16-channel modules only.

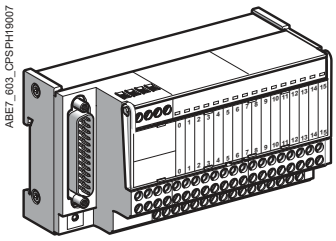

ABE7CPA02

Analog sub-bases and special functions

Analog signals are connected on the following products:

■ **ABE7CPA01** sub-base for counter modules in the TSX Micro and Premium ranges. This also communicates with the Altivar 18 variable speed drive.
■ **ABE7CPA02** sub-base for connection and distribution of 8 channels over screw terminals while maintaining shielding continuity.
■ **ABE7CPA21** sub-base with identical functions to the previous sub-base for the 4 analog output channels.
■ **ABE7CPA03** sub-base, which can also supply 2 or 4-wire sensors, channel by channel, with 24 V ⎓ protected voltage and current limiting at 25 mA. It also ensures continuity of the current loops when the 25-way SUB-D connector is unplugged.
■ **ABE7CPA31** sub-base for distribution and isolation of the 24 V ⎓ power supply required for the 8 analog input channels while maintaining isolation between channels of the TSXAEY810 module. All channels are self-limited to 25 mA.

Accessories for connection sub-bases

The Modicon Telefast pre-wired system offers a range of accessories to simplify the installation of equipment and to enable full use of all features offered by the connection sub-bases.

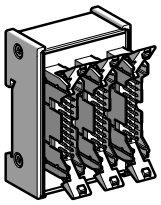
ABE7ACC02

Cable connections to the PLC

Cables

■ Only **ABFH20H100** and **ABFH20H200** cables, made from rolled ribbon cable and HE 10 insulation piercing connectors, are truly universal. Owing to their small size, they can be connected to any I/O modules or terminal blocks equipped with 20-way HE 10 connectors. They are available in lengths of 0.5 to 5 m *(1.64 to 16.4 ft)*, but the user can create custom cables up to a maximum length of 30 m *(98.43 ft)* using additional cable and HE 10 connectors.
■ **TSXCDP053**, **TSXCDP103**, **TSXCDP203**, and **TSXCDP303** molded cables are only used with the TSX Micro and Premium ranges. They are multicore cables and have a high quality finish.

Splitter sub-bases

When module configuration and signal distribution are not compatible, the Telefast system can use **ABE7ACC02**, **ABE7ACC10**, **ABE7ACC11**, and **ABE7ACC21** splitter sub-bases:
□ 16 channels (2 x 8) for all 16-channel outputs
□ 24 channels (3 x 8) for DST2472 modules
□ 32 channels (2 x 16) for NUM inputs
□ 24 channels (3 x 8) for NUM outputs
Other sub-bases enable I/O redundancy on 2 input modules in parallel (**ABE7ACC11**) or on 2 output modules in parallel (**ABE7ACC10**).

Selection guide
pages 10 to 15

References
pages 16

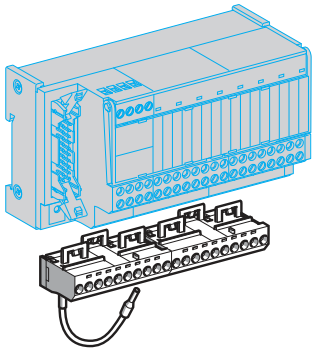

ABE7BV20

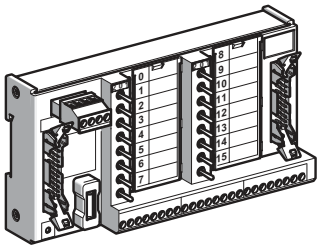

ABE7TES160

Accessories for connection sub-bases (continued)

Cabling accessories

Cable gland assembly
Using the cable gland assembly enables 3 cables to run outside the enclosure without the addition of a series connection.
ABE7BV10 and **ABE7BV20 add-on terminal blocks**
With 8 and 16 channels, these products give wider connection options: common, shielding, etc.

Other accessories

Plug-in continuity blocks
Available in 10 and 12 mm *(0.39 and 0.47 in.)* widths, the blocks are mounted on **ABE7P16T111**, **ABE7P16T210**, **ABE7P16T230**, **ABE7P16T214**, **ABE7P16T215**, **ABE7P16T330**, **ABE7P16T334**, and **ABE7P16T318** relay sub-bases in place of **ABR7** and **ABS7** relays. They make use of the sub-base functions to connect the channel without the need to adapt the channel using a relay.

ABE7TES160 simulator sub-base
This can be used to force or inhibit the discrete I/O.

5 x 20 fuses
References for all fuses can be found under accessories.

Label marking software
This produces finished labels for channels, simplifying installation and reducing the risk of error during maintenance by marking the labels according to the sub-base mounting. The program runs under Windows.

Sub-base/plug-in output relay combinations

Relays for ABE7●16T●●● sub-bases	Relay width 10 mm *(0.39 in.)*				Relay width 5 mm *(0.2 in.)*	
Relay	ABR7S21	ABR7S23	ABS7SA2M	ABS7SC2E	ABR7S11	ABS7SC1B
Function	Relay 1 NO	Relay 1 C/O	Output 230 V ∿ - 0.5 A	Output 48 V ⎓ - 0.5 A	Relay 1 NO	Output 24 V ⎓ - 2 A
Sub-bases/modules						
ABE7P16T210, ABE7R16T210	■		■	■		
ABE7P16T111, ABE7R16T111, ABE7R16M111					■	■
ABE7R16T212	■		■	■		
ABE7P16T214	■		■	■		
ABE7P16T215	■		■	■		
ABE7R16T230		■	■	■		

12.5 mm width relay for ABE7●16T3●● sub-bases					
Relay	ABR7S33	ABS7SA3M	ABS7SC3E	ABS7SC3BA	ABE7ACC21 *(1)*
Function	Relay 1 C/O	Output 230 V ∿ - 1.5 A	Output 48 V ⎓ - 1.5 A	Output 24 V ⎓ - 2 A Protected	Continuity 0.5 A
Sub-bases/modules					
ABE7P16T318	■	■	■		■
ABE7P16T330, ABE7R16T330	■	■	■	■	■
ABE7P16T334	■	■	■	■	■
ABE7R16T370		■			

■ Compatible

(1) Product mounted on ABE7P16F310/ABE7P16F312 plug-in input sub-bases

Telefast Pre-wired System

Modicon ABE7 connection sub-bases

Discrete input and/or output sub-bases - IP20

Applications	Discrete inputs or outputs					Outputs for solid state and/or electromechanical relays
	Optimum "Economy"	Optimum "Miniature"	Universal			Optimum and Universal
Compatibility □ Direct	□ Modicon X80 I/O expansion modules (see page 26) □ Modicon Premium automation platforms (see page 30) □ Modicon TSX Micro compact/modular PLCs (see page 36)	□ Modicon M221 Book logic controllers (see page 24) □ Modicon TM3 I/O expansion modules (see page 24) □ Modicon X80 I/O modules (see page 26) □ Modicon Premium automation platforms (see page 30) □ Modicon TSX Micro compact/modular PLCs (see page 36) □ Modicon STB (distributed I/O solution) (see page 38)				□ Modicon M221 Book logic controllers (see page 24) □ Modicon TM3 I/O expansion modules (see page 24) □ Modicon X80 I/O modules (see page 26) □ Modicon Premium automation platforms (see page 30) □ Modicon TSX Micro compact/modular PLCs (see page 36)
□ Indirect	□ Via Modicon X80 I/O modules: - Modicon 340 automation platforms - Modicon 580 automation platforms	□ Via Modicon TM3 I/O expansion modules: - Modicon M241 logic controllers - Modicon M251 logic controllers □ Via Modicon X80 I/O modules: - Modicon 340 automation platforms - Modicon 580 automation platforms - Modicon Quantum automation platforms				□ Via Modicon TM3 I/O expansion modules: - Modicon M241 logic controllers - Modicon M251 logic controllers □ Via Modicon X80 I/O modules: - Modicon 340 automation platforms - Modicon 580 automation platforms - Modicon Quantum automation platforms
Sub-base type	Passive connection sub-bases					Plug-in electromechanical or solid state relays
Equipped with relays	–					Yes
Control voltage	24 V ⎓					24 V ⎓
Output voltage	24 V ⎓					24V ⎓ (solid state) 5... 24 V ⎓, 230 V ∿ (electromechanical)
Output current per channel	0.5 A					5 A (th)
Modularity	16 channels		8-12-16 channels			16 channels 8 passive inputs 8 relay outputs
No. of terminals per channel	1	1 to 3	1	2		1
Type of connection terminals	Signal	Signal, common (configurable as 24 V or 0 V ⎓)	Signal	Signal, common (configurable as 24 V or 0 V ⎓)		1 NO contact and common, 4 output channels 2 input connection points
Connectors	20-way HE10 connector					20-way HE10 connectors
Terminal block – Removable	No		No			No
Terminal block – Terminal type	Screw					Screw
Additional or optional function	Economy version available in kit form (sub-base plus cordset)	Miniature sub-bases	Compact size	Type 2 input *(1)*	Isolator	Miniature sub-base - Common per group of 4 channels Synergy with Tego Power and Micro PLC
Type of device	**ABE7H20E000**	**ABE7H16C10** **ABE7H16C11** **ABE7H16C21** **ABE7H16C31**	**ABE7H16R50**	**ABE7H08R21** **ABE7H16R20** **ABE7H16R21** **ABE7H16R23**	**ABE7H16S21**	**ABE7R16M111**
Page	16		16			18

(1) For Modicon TSX Micro and Modicon Premium PLCs.

Telefast Pre-wired System

Modicon ABE7 connection sub-bases

Discrete input and/or output sub-bases - IP20

Applications	Discrete outputs				Discrete outputs				Discrete inputs or outputs			
	Optimum	Universal	Optimum	Universal	Universal				Universal			
Compatibility □ Direct	□ Modicon M221 Book logic controllers (see page 24) □ Modicon TM3 I/O expansion modules (see page 24) □ Modicon X80 I/O modules (see page 26) □ Modicon Premium automation platforms (see page 30) □ Modicon TSX Micro compact/modular PLCs (see page 36) □ Modicon STB (distributed I/O solution) (see page 38)				□ Modicon M221 Book logic controllers (see page 24) □ Modicon TM3 I/O expansion modules (see page 24) □ Modicon X80 I/O modules (see page 26) □ Modicon Premium automation platforms (see page 30) □ Modicon TSX Micro compact/modular PLCs (see page 36) □ Modicon STB (distributed I/O solution) (see page 38)							
□ Indirect	□ Via Modicon TM3 I/O expansion modules: - Modicon M241 logic controllers - Modicon M251 logic controllers □ Via Modicon X80 I/O modules: - Modicon 340 automation platforms - Modicon 580 automation platforms - Modicon Quantum automation platforms				□ Via Modicon TM3 I/O expansion modules: - Modicon M241 logic controllers - Modicon M251 logic controllers □ Via Modicon X80 I/O modules: - Modicon 340 automation platforms - Modicon 580 automation platforms - Modicon Quantum automation platforms							
Relay sub-base	Electromechanical, fixed		Electromechanical or solid state		Electromechanical, plug-in		Solid state, fixed	–	–		Solid state, plug-in	
Equipped with relays	Yes		Yes	No	Yes		Yes	–	–		Yes	No
Control voltage	24 V ⎓				24 V ⎓						From 24 V ⎓ to 230 V ∿	From 5 V TTL to 230 V ∿
Output voltage	5 V...30 V ⎓ 230 V ∿	5 V...48 V ⎓ 230 V ∿	24 V ⎓ (solid state) 5 V...24 V ⎓, 230 V ∿ (electromechanical)	5 V...150 V ⎓ 230 V ∿	5 V...150 V ⎓ 230 V ∿		24 V ⎓					
Output current per channel	2 A (th)	5 A (th)	2 A (solid state) 6 A (electromechanical)	0.5 to 10 A (depending on relay)	5 A (th)	8 A (th)	0.5 to 2 A	125 mA	0.5 A	125 mA	12 mA	
Modularity	8-16 channels		16 channels	8 or 16 channels	16 channels							
No. of terminals per channel	1	2	1	2 to 3	2 to 3	2 to 6	2		3	2		
Type of connection terminals	1 NO contact	1 NO contact and common	1 NO contact	Signal, polarities	1 C/O contact or 1 NO contact and common	1 C/O contact or 2 NO contacts and common	Signal and 0 V		24 V and 0 V ⎓ signal	Signal can be isolated, protected common	Signal	Signal and common
Connectors	20-way HE 10 connector				20-way HE 10 connector							
Terminal block Removable	Yes	Yes	No	No	No		Yes	No	No		Yes	No
Terminal type	Screw or spring		Screw		Screw		Screw or spring		Screw		Screw or spring	
Additional or optional function	Volt-free or common per group of 8 channels		Miniature sub-bases Common per group of 4 channels	Isolator and fuse	Volt-free or common per group of: 8 channels	4 channels	Fault signal	Isolator and fuse (indicator)	3-wire proximity sensor	Isolator and fuse (indicator)	–	
Type of device	**ABE7R08S111** **ABE7R16S111**	**ABE7R08S210** **ABE7R16S210** **ABE7R16S212**	**ABE7R16T111**	**ABE7P16T111**	**ABE7P16T210** **ABE7P16T230** **ABE7P16T214** **ABE7P16T215** **ABE7P16T330** **ABE7P16T334** **ABE7P16T318**	**ABE7R16T210** **ABE7R16T212** **ABE7R16T230**	**ABE7R16T330** **ABE7R16T370**	**ABE7S16S2B0** **ABE7S16S1B2**	**ABE7H16F43**	**ABE7H16R31**	**ABE7H16S43**	**ABE7S16E2E1** **ABE7S16E2E0** **ABE7S16E2F0** **ABE7S16E2M0**	**ABE7P16F310** **ABE7P16F312**
Page	17		18		18		17	16			17	18

Telefast Pre-wired System

Modicon ABE7 connection sub-bases

Analog and application-specific sub-bases - IP20

Applications	Analog signals and special functions					Analog signals and special functions	
Compatibility	Modicon TSX Micro: - TSX3722 - TSXCTZ●A	Modicon Premium: - TSXCTY●A - TSXCAY●1	Modicon Premium: - TSXASY800 - TSXAEY1600 - TSXA●Y800 Modicon X80 I/O platforms: - BMXAMI0800 - BMXAMI0810 - BMXAMO0802 Modicon Quantum: - 140AVI03000 - 140ACI03000 - 140ACI04000 - 140ACO13000	Modicon Premium: - TSXASY410 - TSXAEY420 Modicon X80 I/O platforms: - BMXAMO0210 - BMXAMO0410 - BMEAHO0412 Modicon Quantum: - 140AVO02000 - 140ACO02000	Modicon X80 I/O platforms: - BMXAMI0410 - BMXAMI0410 - BMXART0414 - BMXART0814 Modicon Premium: - TSXAEY1614	Modicon Premium: - TSXAEY800 - TSXAEY1600 Modicon Quantum: - 140AVI03000 - 140ACI03000 - 140ACI04000	Modicon Premium: - TSXAEY810 Modicon X80 I/O platforms: - BMXAMI0800 - BMXAMI0810 - BMEAHI0812 *(1)* Modicon Quantum: - 140AVI03000 - 140ACI03000 - 140ACI04000
Type of signal	Counter inputs and analog I/O	Counter inputs Axis control Position control	Analog inputs Current/Voltage Pt 100	Analog inputs Current Voltage	Analog inputs	Analog inputs Current Voltage Pt 100	Isolated analog inputs
Functions	Passive connection, point-to-point with shield continuity				Direct connection of 4 thermocouples with cold junction compensation Provision and distribution of isolated power supplies	Distribution of sensor power supplies by limiter (25 mA)	Distribution of isolated sensor power supplies by converter
Modularity	1 counter channel or 8 analog inputs + 2 analog outputs	8 channels	4 channels		4 channels	8 channels	8 channels
Control voltage	24 V ⎓				–	24 V ⎓	
Output voltage	24 V ⎓				–	24 V ⎓	
Output current per channel	25 mA				–	25 mA	
No. of terminals per channel	2	2 or 4	2 or 4		2 or 4	2 or 4	
Type of connector	15-way SUB-D + 9-way SUB-D	25-way SUB-D			25-way SUB-D	25-way SUB-D	25-way SUB-D
Fuse terminal block Removable	No	No			No	No	No
Fuse terminal block Terminal type	Screw	Screw			Screw	Screw	Screw or spring
Type of device	**ABE7CPA01**	**ABE7CPA02**	**ABE7CPA21**		**ABE7CPA412** **ABE7CPA410**	**ABE7CPA03**	**ABE7CPA31** **ABE7CPA31E**
Page	19					19	

(1) BMEAHI0812 is only supplied with ABE7CPA31.

Telefast Pre-wired System

Modicon ABE7 connection sub-bases

Passive connection sub-bases for discrete signals

ABE7H20E000

ABE7H20E100
ABE7H20E200

ABE7H34E100
ABE7H34E200

ABE7H08R21

ABE7H16R●●

ABE7H16S43

ABE7H16F43

Optimum "Economy" sub-base

Function	No. of channels	No. of terminals per channel	No. of terminals on row number	For PLCs	Length of PLC connection cable m/ft	Type of connection	Reference	Weight kg/*lb*
Input or output	16	1	2	□ Modicon M221 □ TSX Micro □ Modicon Premium □ Modicon X80 I/O modules □ Modicon M340	–	Screw	ABE7H20E000	–

Kits (Optimum Economy sub-base + cordset)

Kit contents	Compatibility	Reference	Weight kg/*lb*
1x 16-channel Economy sub-base (type ABE7H20E000) and 1 cordset (type ABFH20H100, length 1 m/3.28 ft)	□ TSX Micro □ Modicon Premium	ABE7H20E100	0.330 *0.728*
1x 16-channel Economy sub-base (type ABE7H20E000) and 1 cordset (type ABFH20H200, length 2 m/6.56 ft)	□ TSX Micro □ Modicon Premium	ABE7H20E200	0.410 *0.904*
2x 16-channel Economy sub-bases (type ABE7H20E000) and 1 Y-cordset (type ABFH34M100, length 1 m/*3.28 ft*)	□ Modicon X80 I/O modules □ Modicon M340	ABE7H34E100	0.582 *1.283*
2x 16-channel "Economy" sub-bases (type ABE7H20E000) and 1 Y-cordset (type ABFH34M200, length 2 m/*6.56 ft*)	□ Modicon X80 I/O modules □ Modicon M340	ABE7H34E200	0.725 *1.598*

Optimum "miniature" sub-bases

Function	No. of channels	No. of terminals per channel	No. of terminals on row number	LED per channel	Polarity distribution	Type of connection	Reference	Weight kg/*lb*
Input or output	16	1	1	No	No	Screw	ABE7H16C10	0.160 *0.353*
				Yes	No	Screw	ABE7H16C11	0.160 *0.353*
		2	2	Yes	0 or 24 V	Screw	ABE7H16C21	0.205 *0.452*
		3	3	Yes	0 or 24 V	Screw	ABE7H16C31	0.260 *0.573*

Universal sub-bases

Function	No. of channels	No. of terminals per channel	No. of terminals on row number	LED per channel	Polarity distribution	Isolator (S) Fuse (F) per channel	Type of connection	Reference	Weight kg/*lb*
Input or output	8	2	2	Yes	0 or 24 V	–	Screw	ABE7H08R21	0.218 *0.481*
	16	1	1	No	No	–	Screw	ABE7H16R10	0.274 *0.604*
				Yes	No	–	Screw	ABE7H16R11	0.274 *0.604*
			2	No	No	–	Screw	ABE7H16R50	0.196 *0.432*
		2	2	No	0 or 24 V	–	Screw	ABE7H16R20	0.300 *0.661*
				Yes	0 or 24 V	–	Screw	ABE7H16R21	0.300 *0.661*
						S	Screw	ABE7H16S21	0.375 *0.827*
		3	3	Yes	0 or 24 V	–	Screw	ABE7H16R31	0.346 *0.763*
Type 2 input *(1)*	16	2	2	Yes	0 or 24 V	–	Screw	ABE7H16R23	0.320 *0.705*
Input	16	2	1	Yes	24 V	S, F *(2)*	Screw	ABE7H16S43	0.640 *1.411*
Output	16	2	1	Yes	0 V	S, F *(2)*	Screw	ABE7H16F43	0.640 *1.411*

(1) For TSX Micro, Modicon Premium.
(2) With LED to indicate blown fuse.

Telefast Pre-wired System

Modicon ABE7 connection sub-bases

Adapter sub-bases with fixed relays

ABE7S16E2●●

ABE7S16S●●

ABE7R08S21●

Adapter sub-bases with fixed relays and removable terminal blocks

Universal input sub-bases with solid state relays

Number of channels	Number of terminals per channel	Isolation of PLC/ Operative part	Voltage	Type of connection	Reference	Weight kg/*lb*
16	2	Yes	24 V ⎓	Screw	ABE7S16E2B1	0.370 *0.816*
			48 V ⎓	Screw	ABE7S16E2E1	0.370 *0.816*
			48 V ∿	Screw	ABE7S16E2E0	0.386 *0.851*
			110 V ∿	Screw	ABE7S16E2F0	0.397 *0.875*
			230 V ∿	Screw	ABE7S16E2M0	0.407 *0.897*

Universal output sub-bases with solid state relays

Number of channels	Isolation of PLC/ Operative part	Output voltage	Output current	Fault detection signal *(1)*	Type of connection	Reference	Weight kg/*lb*
16	No	24 V ⎓	0.5 A	Yes *(2)*	Screw	ABE7S16S2B0	0.405 *0.893*
				No	Screw	ABE7S16S1B2	0.400 *0.882*

Optimum and Universal output sub-bases with electromechanical relays

Number of channels	Number of contacts	Output current	Polarity distribution/ operative part	Type of connection	Reference	Weight kg/*lb*
8	1 NO	2 A	Contact common per group of 4 channels	Screw	ABE7R08S111	0.252 *0.556*
	1 NO	5 A	Volt-free	Screw	ABE7R08S210	0.448 *0.988*
16	1 NO	2 A	Contact common per group of 8 channels	Screw	ABE7R16S111	0.405 *0.893*
	1 NO	5 A	Volt-free	Screw	ABE7R16S210	0.405 *0.893*
			Common per group of 8 channels on both poles	Screw	ABE7R16S212	0.400 *0.882*

(1) A fault on a sub-base output Qn will set PLC output Qn to safety mode, which will be detected by the PLC.
(2) Can only be used with modules with protected outputs.

Telefast Pre-wired System

Modicon ABE7 connection sub-bases

Adapter sub-bases with plug-in relays

ABE7P16F31●

ABE7R16M111

ABE7R16T210

ABE7P16T111

ABE7P16●●●●

Adapter sub-bases with plug-in relays *(1)*

Universal input sub-bases for solid state relays, supplied without relays

No. of channels	Number of terminals per channel	For relay type	Isolation of PLC/ Operative part	Input connection	Type of connection	Reference	Weight kg/*lb*
16	2	ABS7E ABR7 ABS7S33E	Yes	Volt-free	Screw	ABE7P16F310	0.850 *1.874*
				Polarity distribution	Screw	ABE7P16F312	0.850 *1.874*

Optimum and Universal output sub-bases, supplied with electromechanical relays *(2)*

No. of channels	Relay width	Relay type supplied	Number and type of contacts	Polarity distribution/operative part	Reference	Weight kg/*lb*
16	5 mm *0.197 in.*	ABR7S11	1 NO	Contact common per group of 4 channels	ABE7R16T111	0.600 *1.323*
				Contact common per group of 4 output channels + 2 common input terminals	ABE7R16M111 *(3)*	0.600 *1.323*
	10 mm *0.394 in.*	ABR7S21	1 NO	Volt-free	ABE7R16T210	0.735 *1.620*
				Common on both poles *(3)*	ABE7R16T212	0.730 *1.609*
		ABR7S23	1 C/O	Volt-free	ABE7R16T230	0.775 *1.709*
	12 mm *0.472 in.*	ABR7S33	1 C/O	Volt-free	ABE7R16T330	1.300 *2.866*
		ABR7S37	2 C/O	Volt-free	ABE7R16T370	1.300 *2.866*

Optimum and Universal output sub-bases for solid state relays and/or electromechanical relays *(1)*

No. of channels	Relay width	For relay type	Isolator per channel	Fuse per channel	Polarity distribution/ operative part	Type of connection	Reference	Weight kg/*lb*
16	5 mm *0.197 in.*	ABR7S11 ABS7SC1B	No	No	Contact common per group of 4 channels	Screw	ABE7P16T111	0.550 *1.213*
	10 mm *0.394 in.*	ABR7S2● ABS7SA2● ABS7SC2●	No	No	Volt-free	Screw	ABE7P16T210 *(4)*	0.615 *1.356*
							ABE7P16T230 *(4)*	0.655 *1.444*
				Yes	Volt-free	Screw	ABE7P16T214	0.675 *1.488*
				Yes	Common on both poles *(5)*	Screw	ABE7P16T215	0.670 *1.477*
16	12 mm *0.472 in.*	ABR7S33 ABS7A3● ABS7SC3●● ABE7ACC21	No	No	Volt-free	Screw	ABE7P16T330	0.900 *1.984*
		ABR7S33 ABS7SA3M ABS7SC3E ABE7ACC21	No	Yes	Volt-free	Screw	ABE7P16T334	0.900 *1.984*
			Yes	Yes	Common on both poles *(5)*	Screw	ABE7P16T318	1.000 *2.205*

(1) Not equipped with relays.
(2) The sub-bases are supplied as standard with electromechanical relays, all or some of which can be replaced by solid state relays of the same width (it is possible to combine these different technologies on a single sub-base).
(3) Two connection methods are available, enabling inputs and outputs to be connected to the same sub-base at the same time.
(4) For use with ABR7S21 relay for ABE7P16T210 sub-base and ABR7S23 relay for ABE7P16T230 sub-base.
(5) Per group of 8 channels.

Telefast Pre-wired System

Modicon ABE7 connection sub-bases

Connection sub-bases for counter and analog channels

ABE7CPA01

ABE7CPA11

ABE7CPA21/410/412

Connection sub-bases for counter and analog channels

Functions	For platforms	Compatible modules	Type of connection on Telefast end	Type of connection	Reference	Weight kg/*lb*
Counter and analog, axis control, position control	TSX Micro Modicon Premium	TSX3722 TSXCTZ●A TSXCTY●A TSXCAY●1	15-way SUB-D	Screw	**ABE7CPA01**	0.300 *0.661*
Distribution of 4 thermocouples	Modicon X80 I/O	BMXART0414 BMXART0814	25-way SUB-D	Screw	**ABE7CPA412**	0.180 *0.397*
Passive distribution of 8 analog I/O channels on screw terminals, with shield continuity	Modicon Premium	TSXASY800 TSXAEY1600 TSXA●Y800	25-way SUB-D	Screw	**ABE7CPA02**	0.290 *0.639*
	Modicon X80 I/O	BMXAMI0800 BMXAMI0810 BMEAHI0812 BMXAMO0802				
	Modicon Quantum	140AVI03000 140ACI03000 140ACI04000 140ACO13000				
Provision and distribution of protected isolated power supplies for 4 analog input channels	Modicon M340	BMXAMI0410	25-way SUB-D	Screw	**ABE7CPA410**	0.180 *0.397*
Distribution of 4 analog output channels	Modicon Premium	TSXASY410 TSXAEY420	25-way SUB-D	Screw	**ABE7CPA21**	0.210 *0.463*
	Modicon X80 I/O	BMXAMO0210 BMXAMO0410 BMEAHO0412				
	Modicon Quantum	140AVO02000 140ACO02000				
Distribution and supply of 8 analog input channels (with limitation of each current loop)	Modicon Premium	TSXAEY800 TSXAEY1600	25-way SUB-D	Screw	**ABE7CPA03**	0.330 *0.728*
	Modicon Quantum	140AVI03000 140ACI03000 140ACI04000				
Distribution and supply of 8 analog input channels isolated from one another with 25 mA limitation per channel	Modicon Premium	TSXAEY810	25-way SUB-D	Screw	**ABE7CPA31**	0.410 *0.904*
	Modicon X80 I/O	BMXAMI0800 BMXAMI0810 BMEAHI0812 *(1)*		Spring	**ABE7CPA31E**	0.410 *0.904*
	Modicon Quantum	140AVI03000 140ACI03000 140ACI04000				

(1) The BMEAHI0812 module is not compatible with the ABE7CPA31E connection sub-base.

Telefast Pre-wired System

Modicon ABE7 connection sub-bases

Cordsets

ABFH20H●●●

Cordsets for connection between TSX Micro, Modicon Premium, and sub-bases

Description	Compatibility	Cross-section Gauge	Connector type	Length m/*ft*	Reference	Weight kg/*lb*
Cordsets equipped with an HE10 (20-way) connector at each end	TSX Micro or Modicon Premium and ABE7H20E000 sub-base	AWG 28/0.08 mm²	HE10 - HE10	1/*3.281*	ABFH20H100	–
				2/*6.562*	ABFH20H200	–
				3/*9.843*	ABFH20H301	–
				10/*32.81*	ABFH20H1000	–

ABFH34M●00

Cordsets for connection between Modicon X80 and Modicon M340 I/O and sub-bases

Description	Compatibility	Cross-section Gauge	Connection type	Length m/*ft*	Reference	Weight kg/*lb*
Y-cordsets equipped with one 40-way FCN connector and two HE10 20-way connectors	Modicon X80 or Modicon M340 I/O modules and ABE7H20E000 sub-base	AWG 28/0.08 mm²	FCN 40-way - 2x HE10	1 / *3.281*	ABFH34M100	–
				2/*6.562*	ABFH34M200	–

ABFT20E●●●

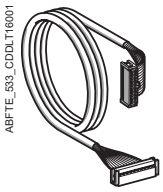

ABFTE20●P●00

TWDFCW●0K

Cordsets for connection between M221 controllers, Modicon TM3 expansion modules, and sub-bases

Description	Compatibility	Cross-section	Connection type	Length m/*ft*	Reference	Weight kg/*lb*
Cordsets for digital inputs	TM3DI16K, TM3DI32K TM3DQ16TK, TM3DQ32TK TM3DQ16UK, TM3DQ32UK	AWG 28/0.08 mm²	HE10 - HE10	0.5 / *1.64*	ABFT20E050	0.060 *0.132*
				1 / *3.281*	ABFT20E100	0.080 *0.176*
				2/*6.56*	ABFT20E200	0.140 *0.308*
	TM221M32TK, TM221ME32TK, TM3DI16K, TM3DI32K	AWG 28/0.08 mm²	HE10 - HE10	1 /*3.281*	ABFTE20EP100	–
				2/*6.562*	ABFTE20EP200	–
				3/*9.843*	ABFTE20EP300	–
Cordsets for digital outputs	TM221M32TK, TM221ME32TK, TM3DQ16TK, TM3DQ32TK	AWG 28/0.08 mm²	HE10 - HE10	1/*3.28*	ABFTE20SP100	–
				2/*6.56*	ABFTE20SP200	–
				3/*9.843*	ABFTE20SP300	–
Cordsets for digital I/O	TM221M32TK, TM221ME32TK, TM3DI16K, TM3DI32K, TM3DQ16TK, TM3DQ32TK	AWG 22/0.035 mm²	HE10 - Flying leads	3/*9.84*	TWDFCW30K	0.405 *0.893*
				5/*16.4*	TWDFCW50K	0.670 *1.477*

Telefast Pre-wired System

Modicon ABE7 connection sub-bases

Cabled connectors for Modicon Quantum I/O modules

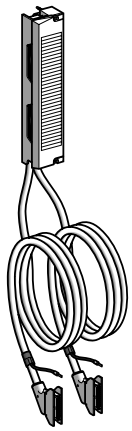

ABFM32H●●1

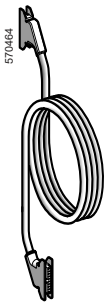

TSXCDP●03

Cabled connectors for Modicon Quantum I/O modules

Type of signal	I/O modules	Connector type	Gauge AWG	Cross-section mm²	Length m/*ft*	No. of channels	Reference	Weight kg/*lb*
Relay inputs and outputs	140DDI353 140DDI853 140DDO353	2 x 20-way HE 10	22	0.324	3/ *9.843*	2 x 16	**ABFM32H300**	1.150 *2.535*
0.5 A outputs	140DDO353	2 x 20-way HE 10 + external power supply	22	0.324	3/ *9.843*	2 x 16	**ABFM32H301**	1.150 *2.535*
Inputs or outputs (96 channels)	140DDI36400 140DDO36400	2 x 20-way HE 10	22	0.324	0.5/*1.640*	6 x 16	**TSXCDP053**	0.085 *0.187*
					1/ *3.281*	6 x 16	**TSXCDP103**	0.150 *0.331*
					2/ *6.562*	6 x 16	**TSXCDP203**	0.280 *0.617*
					3/ *9.843*	6 x 16	**TSXCDP303**	0.410 *0.904*
					5/ *16.404*	6 x 16	**TSXCDP503**	0.670 *1.477*
Analog inputs	140AVI03000 140ACI03000	1 x 25-way SUB-D	24	0.22	2/ *6.562*	8	**ABFM08S201**	0.600 *1.323*

(1) The BMEAHI0812 module is not compatible with the ABE7CPA31E connection sub-base.

Telefast Pre-wired System

Modicon ABE7 connection sub-bases

Accessories

816483

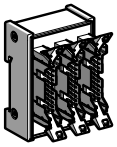

ABE7ACC02

ABC6HE20F

816481

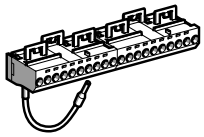

ABE7BV20

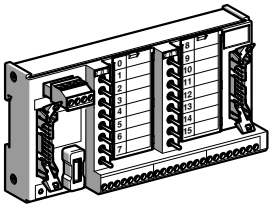

ABE7TES160

816479

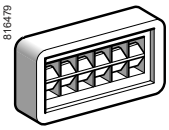

AR1SB3

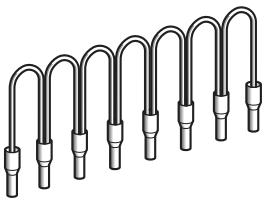

ABEC08R●●●

Accessories					
Description	**No. of channels**	**Characteristics**	**Order in multiples of**	**Unit reference**	**Weight kg/*lb***
Splitter sub-base	16	16 as 2 x 8 channels	1	ABE7ACC02	0.075 *0.165*
HE10 connector	20	20 female channels	1	ABC6HE20F	0.075 *0.165*
Redundant output sub-base	16	16 as 2 x 16 channels	1	ABE7ACC10	0.075 *0.165*
Redundant input sub-base	16	16 as 2 x 16 channels	1	ABE7ACC11	0.075 *0.165*
Plug-in continuity blocks	–	Width 12 mm *0.472 in.*	4	ABE7ACC21	0.010 *0.022*
Additional snap-on terminal blocks (shunted terminals)	8	10 screw terminals	5	ABE7BV10	0.030 *0.066*
	16	20 screw terminals	5	ABE7BV20	0.060 *0.132*
I/O simulator sub-base	16	For display, forcing, inhibition, continuity	1	ABE7TES160	0.010 *0.022*
Self-adhesive marker tag holder	–	For 6 characters	50	AR1SB3	0.010 *0.022*
Quick-blow fuses 5 x 20, 250 V, UL	–	0.125 A	10	ABE7FU012	0.010 *0.022*
		0.315 A	10	ABE7FU030	0.010 *0.022*
		0.5 A	10	ABE7FU050	0.010 *0.022*
		1 A	10	ABE7FU100	0.010 *0.022*
		2 A	10	ABE7FU200	0.010 *0.022*
		4 A	10	ABE7FU400	0.010 *0.022*
		6.3 A	10	ABE7FU630	0.010 *0.022*

Commoning link accessories					
Description	**For common**	**Color**	**Distance between cable ends**	**Reference**	**Weight kg/*lb***
Commoning links Modularity 8 x 1 mm²	∼	Red	2 cm *0.787 in.*	ABFC08R02R	0.010 *0.022*
	⎓	Blue	2 cm *0.787 in.*	ABFC08R02B	0.010 *0.022*

Telefast Pre-wired System

Modicon ABE7 connection sub-bases

Plug-in solid state relays
Plug-in electromechanical relays

ABS7SC1B

ABS7SC2E

ABS7SA2M

ABS7EC3B2
ABS7EC3E2
ABS7EA3E5
ABS7EA3F5
ABS7EA3M5

ABS7SC3BA
ABS7SC3E

ABS7SA3M

ABR7S11
ABR7S21

ABR7S23
ABR7S33

Plug-in solid state relays

Relay width	Functions	Input circuit		Output circuit		Unit reference Order in multiples of 4	Weight kg/*lb*
		Current	Nominal voltage	Current	Nominal voltage *(1)*		
5 mm *0.197 in.*	Output	⎓	24 V	2 A	24 V ⎓	ABS7SC1B	0.010 *0.022*
10 mm *0.394 in.*	Output	⎓	24 V	0.5 A	5…48 V ⎓	ABS7SC2E	0.016 *0.035*
					24…240 V ∿	ABS7SA2M	0.016 *0.035*
12 mm *0.472 in.*	Input	⎓	24 V	–	24 V ⎓	ABS7EA3B5	0.014 *0.031*
			24 V Type 2	–	24 V ⎓	ABS7EC3B2	0.014 *0.031*
			48 V Type 2	–	24 V ⎓	ABS7EC3E2	0.014 *0.031*
		∿ 50 Hz	48 V	–	24 V ⎓	ABS7EA3E5	0.014 *0.031*
		∿ 60 Hz	110…130 V	–	24 V ⎓	ABS7EA3F5	0.014 *0.031*
		∿ 50 Hz	230…240 V	–	24 V ⎓	ABS7EA3M5	0.014 *0.031*
	Output	⎓	24 V	2 A Self-protected	24 V ⎓	ABS7SC3BA	0.016 *0.035*
				1.5 A	5…48 V ⎓	ABS7SC3E	0.016 *0.035*
				1.5 A	24…240 V ∿	ABS7SA3M	0.016 *0.035*

Plug-in electromechanical relays

Relay width	Control voltage	Output current *(1)*	Number of contacts	Order in multiples of	Unit reference	Weight kg/*lb*
5 mm *0.197 in.*	24 V ⎓	5 A (Ith)	1 NO	4	ABR7S11	0.005 *0.011*
10 mm *0.394 in.*	24 V ⎓	5 A (Ith)	1 NO	4	ABR7S21	0.008 *0.018*
			1 C/O	4	ABR7S23	0.008 *0.018*
12 mm *0.472 in.*	2 V ⎓	10 A (Ith)	1 C/O	4	ABR7S33	0.017 *0.037*

Accessory for relays

Description	Reference	Weight kg/*lb*
Extractor for 5 mm *(0.197 in.)* miniature relay	ABE7ACC12	0.010 *0.022*

(1) In DC mode (⎓), nominal voltage varies from 5 to 48 V. In AC mode (∿), nominal voltage varies between 24 and 240 V.

Telefast Pre-wired System

Modicon ABE7 connection sub-bases

Connection sub-bases for M221 Book logic controllers and Modicon TM3 expansion modules

Telefast pre-wired system with Modicon ABE7

For 32-channel Modicon M221 Book logic controller and Modicon TM3 digital I/O expansion modules

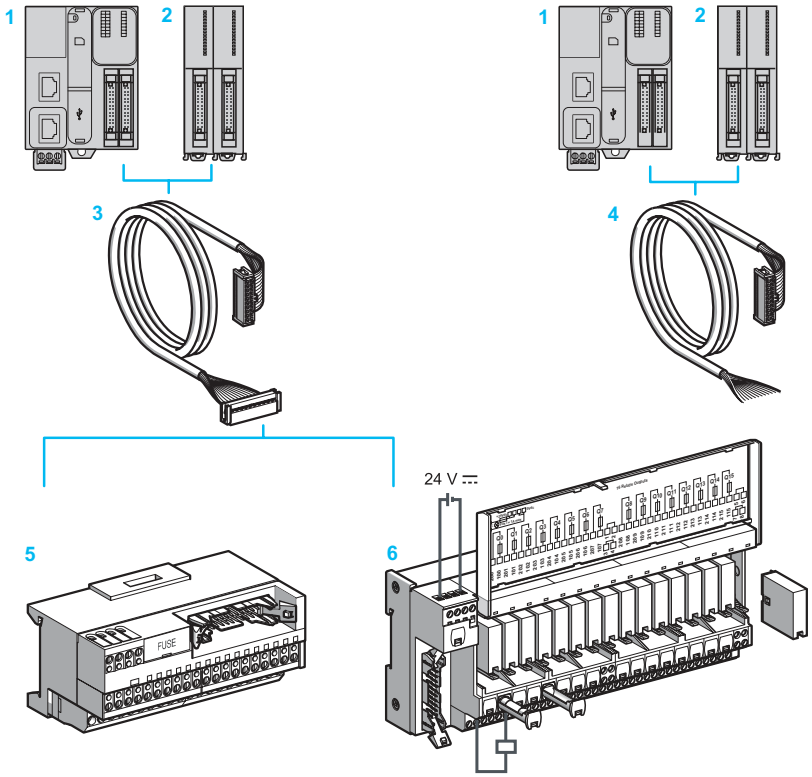

Possible combinations:

- ☐ (1 or 2) + 3 + (5 or 6)
- ☐ (1 or 2) + 4

1 32-channel Modicon M221 Book logic controllers (TM221M32TK, TM221ME32TK), equipped with HE 10 connectors
2 Digital I/O modules (TM3D●●●●K) with 16 or 32 I/O, equipped with HE10 connectors
3 **ABFTE20●●●** cordsets with one HE 10 connector at each end
4 TWDFCW●●● cordsets, equipped with an HE 10 connector at one end and flying leads at the other end for direct connections to sensors, preactuators and terminal blocks
5 Optimum "miniature" sub-bases
6 16-channel sub-base for expansion modules

Combinations

Combinations of Modicon ABE7 sub-bases with M221 Book logic controllers and Modicon TM3 expansion modules

Modicon Telefast sub-bases		Modicon M221 Book logic controllers		Modicon TM3 I/O expansion modules		
		TM221M32TK, TM221ME32TK		TM3DI16K, TM3DI32K	TM3DQ16TK, TM3DQ32TK	TM3DQ16UK, TM3DQ32UK
Type	Reference	Inputs	Outputs (Source)	Inputs	Outputs (Source)	Outputs (Sink)
Passive sub-base	ABE7H20E000					
	ABE7H16C10					
	ABE7H16C11					
	ABE7H16C21					
	ABE7H16C31					
Electromechanical relay output sub-bases	ABE7R16S111					
	ABE7R16T111					
Empty sub-base for solid state or electromechanical relay	ABE7P16T111					

Compatible with inputs. For use with cordsets ABFTE20EP100, ABFTE20EP200, and ABFTE20EP300 (1)

Compatible with outputs. For use with cordsets ABFTE20SP100, ABFTE20SP200, and ABFTE20SP300 (1)

Not compatible

(1) Available lengths: 1, 2, and 3 m (3.28, 6.56, and 9.84 ft)

Selection guide
pages 10 to 15

References
pages 16 to 21

Telefast Pre-wired System

Modicon ABE7 connection sub-bases

Connection sub-bases for M221 Book logic controllers and Modicon TM3 expansion modules

Combinations

Combinations of Modicon ABE7 sub-bases with M221/M241/M251 logic controllers and Modicon TM3 expansion modules

Modicon Telefast sub-bases		Connection via Modicon TM3 I/O expansion modules		
		TM3DI16K, TM3DI32K	TM3DQ16TK, TM3DQ32TK	TM3DQ16UK, TM3DQ32UK
Type	Reference	Inputs	Outputs (Source)	Outputs (Sink)
Passive sub-base	ABE7H16C10			
	ABE7H16C11			
	ABE7H16C21			
	ABE7H16C31			
	ABE7H16F43			
	ABE7H16R10			
	ABE7H16R11			
	ABE7H16R20			
	ABE7H16R21			
	ABE7H16R31			
	ABE7H16R50			
	ABE7H16S21			
	ABE7H16S43			
	ABE7H20E000			
Solid state relay input sub-base	ABE7P16F310			
	ABE7P16F312			
Output sub-base for solid state and/or electromechanical relays	ABE7P16T111			
	ABE7P16T210			
	ABE7P16T214			
	ABE7P16T215			
	ABE7P16T318			
	ABE7P16T330			
	ABE7P16T334			
Electromechanical relay output sub-bases	ABE7R16S111			
	ABE7R16S210			
	ABE7R16S212			
	ABE7R16T111			
	ABE7R16T210			
	ABE7R16T212			
	ABE7R16T230			
	ABE7R16T330			
	ABE7R16T370			
Solid state relay input sub-base	ABE7S16E2B1			
	ABE7S16E2E0			
	ABE7S16E2E1			
	ABE7S16E2F0			
	ABE7S16E2M0			
	ABE7S16S1B2			
	ABE7S16S2B0			

Compatible with inputs. For use with cordsets ABFTE20EP100, ABFTE20EP200, and ABFTE20EP300 (1)

Compatible with outputs. For use with cordsets ABFTE20SP100, ABFTE20SP200, and ABFTE20SP300 (1)

Not compatible

(1) Available lengths: 1, 2, and 3 m (3.28, 6.56, and 9.84 ft)

Telefast Pre-wired System

Modicon ABE7 connection sub-bases

Connection sub-bases for Modicon X80 I/O modules

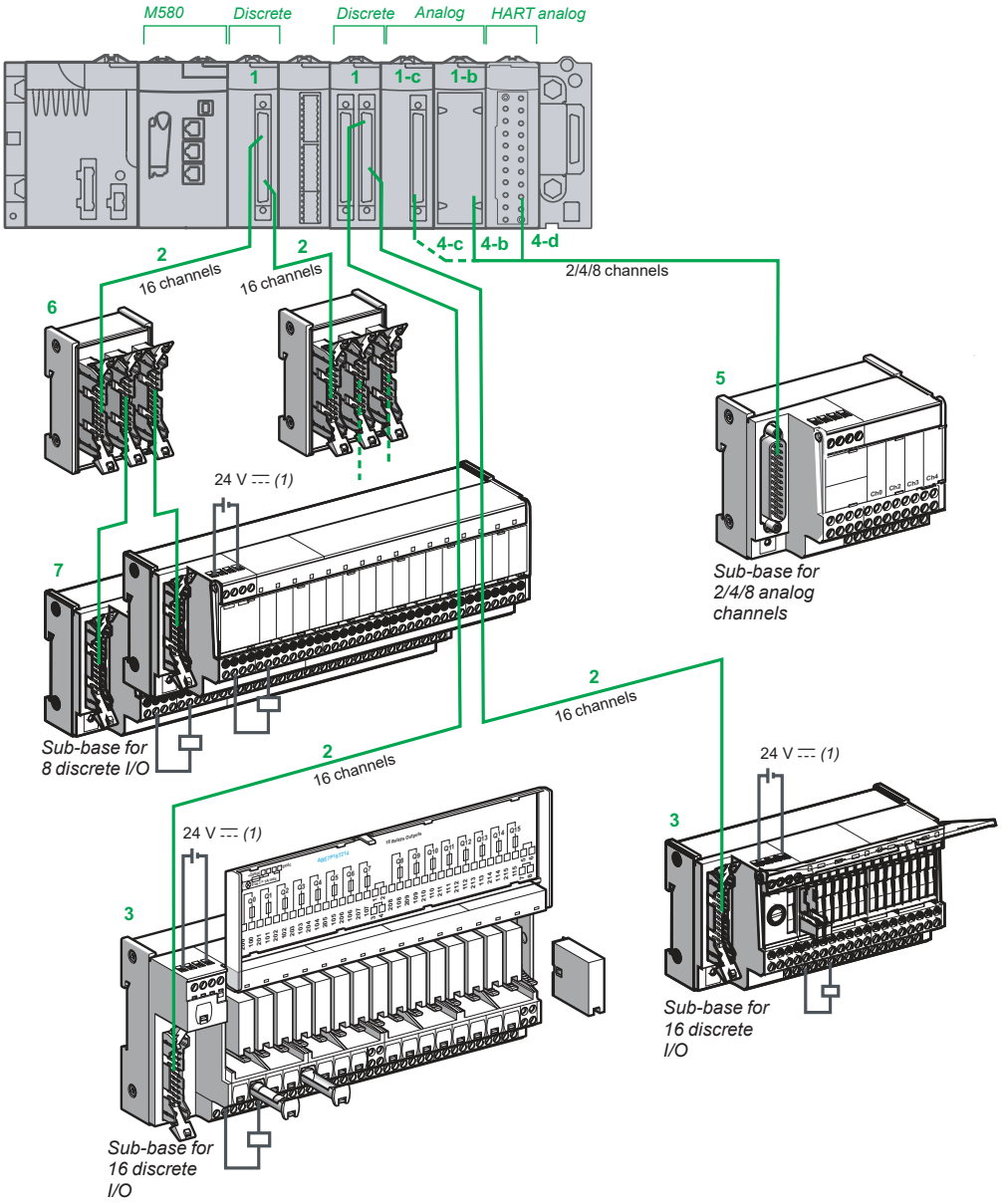

(1) The 24 V ⎓ power supply is connected using Modicon Telefast ABE7 sub-bases only. The 0 V ⎓ connections must be equipotential.

Presentation

I/O modules on the Modicon X80 platform

1 Discrete input modules BMXDDI●●02K, discrete output modules BMXDDO●●02K, and discrete mixed I/O modules (BMXDDM3202K) equipped with one or two 40-way FCN connectors. The modularity of each module (●●) is 32 or 64 channels.

- **1-b** Analog input or output modules:
  - Analog inputs: **BMXAMI0410** (4 channels), **BMXAMI0800** (4 channels), and **BMXAMI0810** (8 channels)
  - Analog outputs: **BMXAMO0210** (2 channels), **BMXAMO0410** (4 channels), and **BMXAMO0802** (8 channels)
- **1-c** Analog input modules **BMXART0414** (4 channels) and **BMXART0814** (8 channels)
- **1-d** HART analog I/O modules **BMEAHI0812** (8 channels) and **BMEAHO0412** (4 channels)

2 Two types of cordset are available depending on the type of discrete module connected to the sub-base (for combinations, see page 28). These cordsets are available in 0.5, 1, 2, 3, 5, or 10 m/*1.64*, *3.28*, *6.56*, *9.84*, *16.4*, and *32.81 ft* lengths:
- **BMXFCC●●●1** cordsets with 20-wire sheath (*AWG22*) equipped with one 40-way FCN connector on the module end and one HE10 molded connector on the Telefast sub-base end
- **BMXFCC●●●3** cordsets with two 20-wire sheaths (*AWG22*) equipped with one common 40-way FCN connector on the module end and two HE10 molded connectors on the Telefast sub-base end

3 16 channel Modicon Telefast ABE7 Optimum or Universal passive connection sub-bases or adapter sub-bases

4 Four types of cordset are available depending on the type of analog module connected to the sub-base (for combinations, see page 29)

- **4-b** : Connection to analog module with 20-way or 28-way removable terminal block:
  - **BMXFCA●●0** cordsets with a 20-way removable terminal block on the module end and a 25-way SUB-D connector on the Telefast sub-base end. Cordsets available in 1.5 or 3 m/*4.92 or 9.84 ft* lengths.
  - **BMXFTA●●2** cordsets with a 20-way terminal block on the module end and a 25-way SUB-D connector on the Telefast sub-base end. Cordsets available in 1.5 or 3 m/*4.92 or 9.84 ft* lengths.
  - **BMXFTA●●0** cordsets with a 28-way terminal block on the module end and a 25-way SUB-D connector on the Telefast sub-base end. Cordsets available in 1.5 or 3 m/*4.92 or 9.84 ft* lengths.
- **4-c**: Connection to analog module with 40-way FCN connector:
  - **BMXFCA●●2** cordsets with a 40-way FCN connector on the module end and a 25-way SUB-D connector on the Telefast sub-base end. Cordsets available in 1.5 or 3 m/*4.92 or 9.84 ft* lengths.
- **4-d**: Connection to HART analog input module:
  - **BMXFTA1522/3022** cordsets with a 20-way removable terminal block at the module end and a 25-way SUB-D connector at the Telefast sub-base end. Cordsets available in 1.5 or 3 m/*4.92 or 9.84 ft* lengths. Connection to HART analog input module:
  - **BMXFCA●●0** (see description in section **4-b**)

5 Modicon Telefast ABE7CPA analog and application-specific connection sub-bases (for combinations, see pages 29):
- **ABE7CPA410** allows connection on a screw terminal block of 4 current/voltage inputs, with provision and distribution of 4 isolated protected power supplies for the current loop inputs.
- **ABE7CPA412** allows connection on a screw terminal block of 4 thermocouple inputs, with supply of cold-junction compensation for these inputs.
- **ABE7CPA21** allows connection on a screw terminal block of 4 current/voltage outputs.
- **ABE7CPA02** allows connection on a screw terminal block of 8 current/voltage I/O.
- **ABE7CPA03** allows connection on a screw terminal block of 8 inputs, with provision and distribution of the power supply (with limitation of each current loop) for the current/voltage outputs of the **BMXAMO0210** analog module.
- **ABE7CPA31** and **ABE7CPA31E** allow connection on a screw terminal block (ABE7CPA31) or a spring-type terminal block (ABE7CPA31E) of 8 inputs, with provision and distribution of the power supply (limited to 25 mA per input).

6 **ABE7ACC02 sub-base for splitting 16 into 2 x 8 channels**, allowing connection of 8 channels

7 8-channel Modicon Telefast ABE7 Optimum or Universal passive connection sub-bases or adapter sub-bases

Telefast Pre-wired System

Modicon ABE7 connection sub-bases

Connection sub-bases for Modicon X80 I/O modules

Combinations of discrete inputs/outputs on the Modicon X80 platform with ABE7 sub-bases

(Items 1…7), see Presentation on page 26

		Discrete I/O modules for Modicon X80 platform				
		Reference for 24 V ⎓ discrete I/O modules (item 1)				
		Inputs		Outputs		I/O
		2 x 16 I	4 x 16 I	2 x 16 Q	4 x 16 Q	1 x 16 I, 1 x 16 Q
		BMXDDI3202K	BMXDDI6402K	BMXDDO3202K	BMXDDO6402K	BMXDDM3202K
Required cordsets						
Preassembled cordsets (connectors at both ends)	**BMXFCC●●1, BMXFCC●●3 (item 2)** *(1)*	Yes	Yes	Yes	Yes	No
	BMXFCC●●3 (item 2) *(1)*	No	No	No	No	Yes
	Quantities to be ordered	1	2	1	2	1
Passive connection sub-bases						
Optimum 16 channels (item 3)	ABE7H34E100, ABE7H34E200 "Economy" *(2)*					
	ABE7H16C10, ABE7H16C11, ABE7H16C21, ABE7H16C31 "Miniature"					
Universal 8 channels (item 7)	ABE7H08R21	*(3)*	*(3)*	*(3)*	*(3)*	*(3)*
Universal 16 channels (item 3)	ABE7H16R10, ABE7H16R11					
	ABE7H16R50					
	ABE7H16R20, ABE7H16R21, ABE7H16S21, ABE7H16R23					
	ABE7H16S21					
	ABE7H16S31					
	ABE7H16R23					
	ABE7H16S43					
	ABE7H16F43					
Input adapter sub-bases with solid state relays						
Universal 16 channels (item 3)	ABE7S16E2B1, ABE7S16E2E1, ABE7S16E2E0, ABE7S16E2F0, ABE7S16E2M0 Fixed solid state relays, removable terminal blocks					
	ABE7P16F310, ABE7P16F312 Plug-in solid state relays					
Output adapter sub-bases with fixed relays, removable terminal blocks						
Optimum & Universal 8 channels (item 7)	ABE7R08S111, ABE7R08S210 Electromechanical relays			*(3)*	*(3)*	*(3)*
Optimum & Universal 16 channels (item 3)	ABE7S16S2B0, ABE7S16S1B2 Solid state relays					
	ABE7R16S111, ABE7R16S210, ABE7R16S212 Electromechanical relays					
Output adapter sub-bases with plug-in relays						
Optimum & Universal 16 channels (item 3)	ABE7R16T111, ABE7R16T210, ABE7R16T212, ABE7R16T230, ABE7R16T330, ABE7R16T370 Electromechanical relays					
	ABE7P16T111, ABE7P16T210, ABE7P16T230, ABE7P16T214, ABE7P16T215, ABE7P16T330, ABE7P16T334, ABE7P16T318 Solid state and/or electromechanical relays					
Sub-bases for analog I/O						
4 channels (item 5)	ABE7CPA410					
	ABE7CPA412					
2 channels (item 5)	ABE7CPA21					
8 channels (item 5)	ABE7CPA02					
	ABE7CPA03					
	ABE7CPA31, ABE7CPA31E					

Compatible
Not compatible

(1) References for cordsets: to be completed, please refer to our "Modicon X80 I/O Platform" offer for Modicon M340, Modicon M580, and Modicon Quantum.
(2) ABE7H34E100 kit: ABE7H20E000 Optimum "Economy" sub-base + ABFH34M100 cordset (1 m/3.28 ft) included. ABE7H34E200 kit: ABE7H20E000 Optimum "Economy" sub-base + ABFH34M200 cordset (2 m/6.56 ft) included.
(3) Using splitter sub-base **6 ABE7ACC02**, *which allows 16 channels to be split into 2 x 8 channels.*

Selection guide pages 10 to 15
References pages 16 to 21

Schneider Electric

Telefast Pre-wired System

Modicon ABE7 connection sub-bases

Connection sub-bases for Modicon X80 I/O modules

Combinations of analog inputs/outputs on the Modicon X80 platform with ABE7 sub-bases

(Items 1…7), see Presentation on page 26		Analog I/O modules for Modicon X80 platform									
		Reference for analog I/O modules (items 1-b, 1-c, and 1-d)									
		Inputs						Outputs			
		4 I	4 I	2 x 4 I	8 I	8 I	8 I	2 Q	4 Q	8 Q	4 Q
		BMXAMI0410	BMXART0414	BMXART0814	BMXAMI0800	BMXAMI0810	BMEAHI0812	BMXAMO0210	BMXAMO0410	BMXAMO0802	BMEAHO0412
Required cordsets											
Preassembled cordsets (connectors at both ends)	**BMXFCA●●0 (item 4-b)** *(1)*	Yes	No	No	No	No	No	Yes	Yes	No	Yes
	BMXFCA●●2 (item 4-c) *(1)*	No	Yes	Yes	No	No	No	No	No	No	No
	BMXFTA●●0 (item 4-c) *(1)*	No	No	No	Yes	Yes	No	No	No	No	No
	BMXFTA●●2 (item 4-c) *(1)*	No	No	No	No	No	No	No	No	Yes	No
	BMXFTA●●22 (item 4-d) *(1)*	No	No	No	No	No	Yes	No	No	No	No
	Quantities to be ordered	1	1	2	1	1	1	1	1	1	1
Passive connection sub-bases											
Optimum 16 channels (item 3)	**ABE7H16C●● "Miniature"**										
Universal 8 channels (item 7)	**ABE7H08R21**										
Universal 16 channels (item 3)	**ABE7H16R1●●**										
	ABE7H16R50										
	ABE7H16R2●●										
	ABE7H16S21										
	ABE7H16S31										
	ABE7H16R23										
	ABE7H16S43										
	ABE7H16F43										
Input adapter sub-bases with solid state relays											
Universal 16 channels (item 3)	**ABE7S16E2●●●** Fixed solid state relays, removable terminal blocks										
	ABE7P16F310, **ABE7P16F312** Plug-in solid state relays										
Output adapter sub-bases with fixed relays, removable terminal blocks											
Optimum & Universal 8 channels (item 7)	**ABE7R08S111**, **ABE7R08S210** Electromechanical relays										
Optimum & Universal 16 channels (item 3)	**ABE7S16S●B●●** Solid state relays										
	ABE7R16S111●, **ABE7R16S210**, **ABE7R16S212** Electromechanical relays										
Output adapter sub-bases with plug-in relays											
Optimum & Universal 16 channels (item 3)	**ABE7R16T●●●**, **ABE7R16M111** Electromechanical relays										
	ABE7P16T●●● Solid state and/or electromechanical relays										
Sub-bases for analog I/O											
4 channels (item 5)	ABE7CPA410	■									
	ABE7CPA412		■	■							
2 channels (item 5)	ABE7CPA21							■	■		■
8 channels (item 5)	ABE7CPA02				■	■	■			■	
	ABE7CPA03				■						
	ABE7CPA31				■	■	■				
	ABE7CPA31E				■	■					

■	Compatible
	Not compatible

(1) References for cordsets: to be completed, please refer to our "Modicon X80 I/O Platform" offer for Modicon M340, Modicon M580, and Modicon Quantum.

Telefast Pre-wired System

Modicon ABE7 connection sub-bases

Connection sub-bases for Modicon Premium platform

Information retained for the Modicon Premium range no longer commercially available

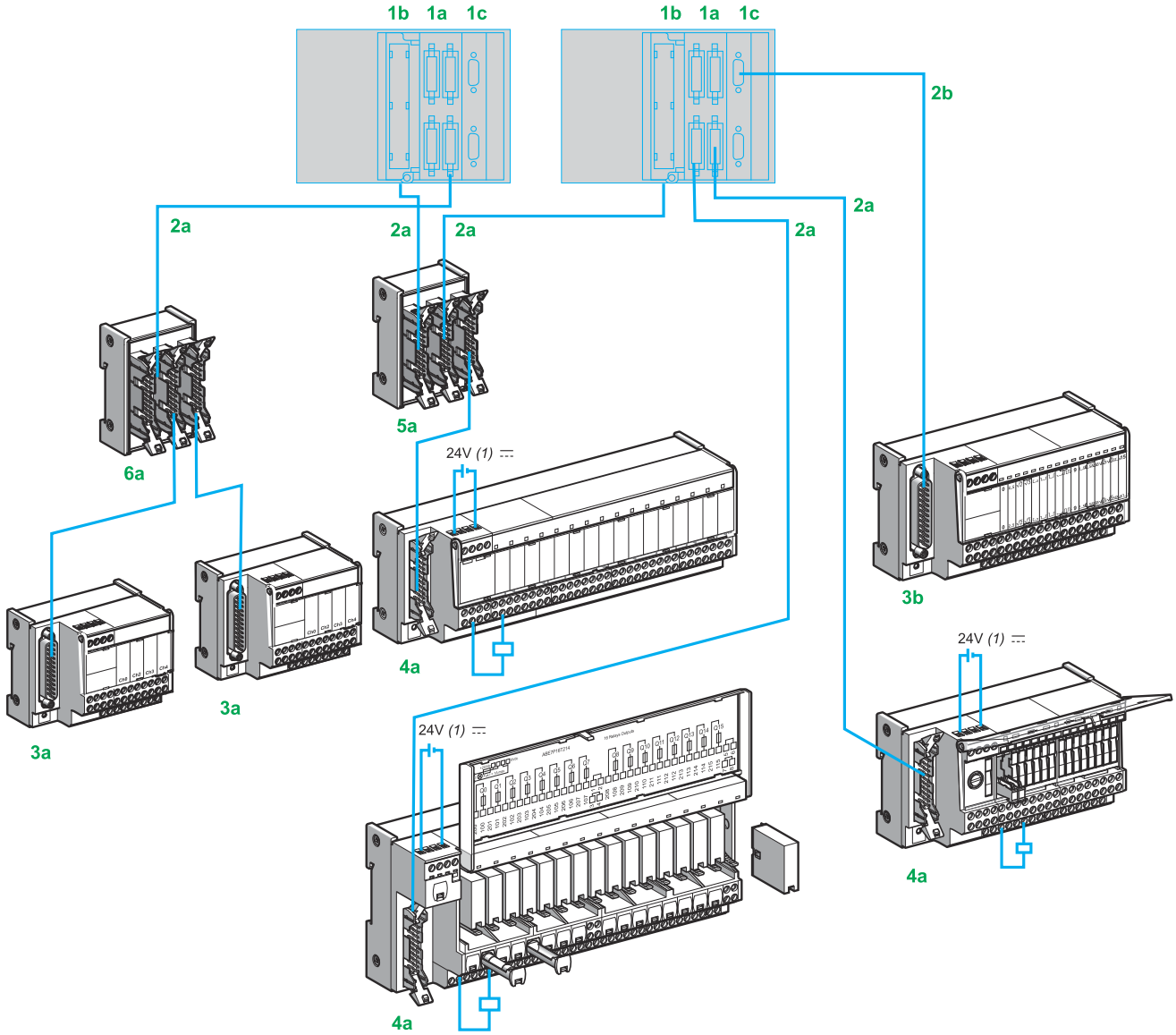

1a Discrete I/O modules equipped with HE 10 connectors
1b Analog I/O modules, equipped with 25-way SUB-D connectors
1c Application-specific modules equipped with screw terminals
2a A single type of cordset equipped with 20-way HE 10 connectors, for 8, 12, or 16-channel modularity. The HE 10 connectors can be molded, **TSXCDP●●●** (AWG 22), or insulation piercing, **ABFH20H●●●** (AWG 28). These cordsets are available in various lengths. They use AWG 28 (0.08 mm^2) for connecting input and output sub-bases rated 100 mA directly, as well as sub-bases with relays. Adapter **ABE7ACC02** allows connection of sub-bases with 8-channel modularity.
2b All analog signals are connected with a **TSXCAP030/100** preassembled cordset equipped with 25-way SUB-D connectors, to provide shielding continuity.
3a 8-channel Modicon Telefast ABE7 sub-bases
3b Sub-bases dedicated to counter and analog channels:
- **ABE7CPA02** for connecting current, voltage, or PT100 inputs on a screw terminal block
- **ABE7CPA03** with 4-20 mA sensor loop power supply and 25 mA/channel limiter
- **ABE7CPA21** for connecting output modules with 4 analog channels on a screw terminal block
- **ABE7CPA31** with the 4-20 mA sensor loop isolated power supply for 8 input channels isolated from one another

4a 16-channel Modicon Telefast ABE7 sub-bases
5a Splitter sub-bases for connecting discrete I/O in parallel from a Modicon Telefast ABE7 sub-base on 2 different PLCs:
- **ABE7ACC10** for output redundancy
- **ABE7ACC11** for input redundancy

6a **ABE7CPA01** sub-base dedicated to connecting axis control and counter inputs on a terminal block

(1) The 24 V ⎓ power supply is connected using Telefast sub-bases only. The 0 V ⎓ connections must be equipotential.

Telefast Pre-wired System

Modicon ABE7 connection sub-bases

Connection sub-bases for Modicon Premium platform

Information retained for the Modicon Premium range no longer commercially available

Combinations of discrete I/O on the Modicon Premium platform with ABE7 sub-bases

(For item numbers, see Presentation on page 30)

		Discrete I/O modules for Modicon Premium					
		Reference for 24 V ⎓ discrete I/O modules (item 1a)					
		Inputs			Outputs	Inputs/outputs	
		4 x 16 I 2 x 16 I	2 x 16 I	1 x 16 I	4 x 16 Q 2 x 16 Q	1 x 16 I	1 x 12 Q
		TSXDEY64D2K TSXDEY32D2K	TSXDEY32DK	TSXDEY16FK	TSXDSY64T2K TSXDSY32T2K	TSXDMY28FK TSXDMY28RFK	
Required cordsets							
Pre-formed cables (at both ends)	TSXCDP053, TSXCDP103, TSXCDP203, TSXCDP303, TSXCDP503 (item 2a) see page 21	Yes	Yes	Yes	Yes	Yes	Yes
	ABFH20H100, ABFH20H200 (item 2a) see page 20	Yes	Yes	Yes	Yes	Yes	Yes
Passive connection sub-bases							
Universal 8 channels (item 3a)	ABE7H08R21	*(1)*		*(1)*	*(1)*	*(1)*	
Universal 16 channels (item 4a)	ABE7H08R21, ABE7H16R10, ABE7H16R11, ABE7H16R50, ABE7H16R20, ABE7H16R21, ABE7H16S21, ABE7H16R31, ABE7H16R23		ABE7H16R20				
	ABE7H16C10, ABE7H16C11, ABE7H16C21, ABE7H16C31		ABE7H16R20				
	ABE7H20E, ABE7H20E100, ABE7H20E200 *(2)*		ABE7H 16R20				
	ABE7H16S21						
	ABE7H16R23						
	ABE7H16F43						
	ABE7H16S43						
Input adapter sub-bases with solid state relays							
Universal 16 channels (item 4a)	ABE7S16E2B1, ABE7S16E2E1, ABE7S16E2E0, ABE7S16E2F0, ABE7S16E2M0 Fixed solid state relays, removable terminal blocks						
	ABE7P16F310, ABE7P16F312 Plug-in solid state relays						
Output adapter sub-bases with fixed relays, removable terminal blocks							
Optimum & Universal 8 channels (item 3a)	ABE7R08S111, ABE7R08S210 Electromechanical relays				*(1)*		
Optimum & Universal 16 channels (item 4a)	ABE7S16S2B0, ABE7S16S1B2 Solid state relays						
	ABE7R16S111, ABE7R16S210, ABE7R16S212 Electromechanical relays						
Output adapter sub-bases with plug-in relays							
Optimum & Universal 16 channels (item 4a)	ABE7R16T111, ABE7R16T210, ABE7R16T212, ABE7R16T230, ABE7R16T330, ABE7R16T370 Electromechanical relays						
	ABE7P16T111, ABE7P16T210, ABE7P16T230, ABE7P16T214, ABE7P16T215, ABE7P16T330, ABE7P16T334, ABE7P16T318 Solid state and/or electromechanical relays						

Compatible
Not compatible

(1) Using splitter sub-base ABE7ACC02, which allows 16 channels to be split into 2 x 8 channels.
(2) ABE7H20E100 and ABE7H20E200 Economy sub-bases including cordset.

Telefast Pre-wired System

Modicon ABE7 connection sub-bases

Connection sub-bases for Modicon Premium platform

Information retained for the Modicon Premium range no longer commercially available

Combinations of analog I/O on the Modicon Premium platform with ABE7 sub-bases

(For item numbers, see Presentation on page 30)

		Analog I/O modules for Modicon Premium						
		Reference for analog I/O modules (item 1b)						
		Inputs				Outputs		Thermocouple inputs
		2 x 8 I	8 I	8 I	4 I	4 Q	8 Q	2 x 8 I
		TSXAEY1600	TSXAEY800	TSXAEY810	TSXAEY420	TSXASY410	TSXASY800	TSXAEY1614
Required cordsets								
Pre-formed cables (at both ends)	**TSXCAP●●0** (item 2b)	Yes	Yes	Yes	Yes	*(2)*	Yes	Yes
Passive connection sub-bases								
Universal 8 channels (item 3a)	**ABE7H08R21**							
Universal 16 channels (item 4a)	**ABE7H16R●●**							
	ABE7H16C●●							
	ABE7H20E●●● *(1)*							
	ABE7H16S21							
	ABE7H16R23							
	ABE7H16F43							
	ABE7H16S43							
Input adapter sub-bases with solid state relays								
Universal 16 channels (item 4a)	**ABE7S16E2●●** Fixed solid state relays, removable terminal blocks							
	ABE7P16F3●● Plug-in solid state relays							
Output adapter sub-bases with fixed relays, removable terminal blocks								
Optimum & Universal 8 channels (item 3a)	**ABE7R08S111, ABE7R08S210** Electromechanical relays							
Optimum & Universal 16 channels (item 4a)	**ABE7S16S●●●** Solid state relays							
	ABE7R16S●●● Electromechanical relays							
Output adapter sub-bases with plug-in relays								
Optimum & Universal 16 channels (item 4a)	**ABE7R16T●●●** Electromechanical relays							
	ABE7P16T●●● Solid state and/or electromechanical relays							
Sub-bases for analog channels								
ABE7CPA01 (item 6a)								
ABE7CPA02 (item 3b)								
ABE7CPA21 (item 3b)					*(2)*			
ABE7CPA03 (item 3b)					*(3)*			
ABE7CPA31 (item 3b)								

Compatible
Not compatible

(1) ABE7H20E100 and ABE7H20E200 Economy sub-bases including cordset.
(2) ABFY25S200 cabled connector equipped with TSXBLY01 terminal block.
(3) Only the first 4 channels are balanced.

Telefast Pre-wired System

Modicon ABE7 connection sub-bases

Connection sub-bases for Modicon Premium platform

Information retained for the Modicon Premium range no longer commercially available

Combinations of application-specific I/O on the Modicon Premium platform with ABE7 sub-bases

(For item numbers, see Presentation on page 30)

		Application-specific I/O modules for Modicon Premium					
		Reference for application-specific I/O modules (item 1c)					
		Axis control		Counter		High-speed counter	
		Speed reference	Auxiliary inputs	Auxiliary inputs	Counter	Auxiliary inputs	Counter
		TSXCAY●1, TSXCFY●A		TSXCTY●A		TSXCTY2C	
Required cordsets							
Pre-formed cables (at both ends)	**TSXCAP030** (item 2b)	Yes	No	No	Yes	No	Yes
	TSXCDP053, TSXCDP103, TSXCDP203, TSXCDP303, TSXCDP503 (item 2a)	No	Yes	Yes	No	Yes	No
Passive connection sub-bases							
Universal 8 channels (item 3a)	**ABE7H08R21**			*(1)*			
Universal 16 channels (item 4a)	**ABE7H16R20, ABE7H16R21, ABE7H16S21, ABE7H16R31, ABE7H16R23**		ABE7H16R20	ABE7H16R20 *(2)*		ABE7H16R20 *(2)*	
	ABE7H16C10, ABE7H16C11, ABE7H16C21, ABE7H16C31		ABE7H16R20	ABE7H16R20 *(2)*			
	ABE7H20E, ABE7H20E100, ABE7H20E200 *(2)*		ABE7H16R20	ABE7H16R20 *(2)*			
	ABE7H16S21						
	ABE7H16R23						
	ABE7H16F43						
	ABE7H16S43						
Input adapter sub-bases with solid state relays							
Universal 16 channels (item 5)	**ABE7S16E2●●** Fixed solid state relays, removable terminal blocks						
	ABE7P16F3●● Plug-in solid state relays						
Output adapter sub-bases with fixed relays, removable terminal blocks							
Optimum & Universal 8 channels (item 3a)	**ABE7R08S111, ABE7R08S210** Electromechanical relays						
Optimum & Universal 16 channels (item 4a)	**ABE7S16S●●●** Solid state relays						
	ABE7R16S●●● Electromechanical relays						
Output adapter sub-bases with plug-in relays							
Optimum & Universal 16 channels (item 4a)	**ABE7R16T●●●** Electromechanical relays						
	ABE7P16T●●● Solid state and/or electromechanical relays						
Sub-bases for counter channels							
ABE7CPA01 (item 6a)							
ABE7CPA02 (item 3b)							
ABE7CPA21 (item 3b)							
ABE7CPA03 (item 3b)							
ABE7CPA31 (item 3b)							

Compatible
Not compatible

(1) 1-channel connection
(2) 2-channel connection
(2) ABE7H20E100 and ABE7H20E200 Economy sub-bases including cordset
(3) Compatible with module **TSXCAY●1** *only.*

Telefast Pre-wired System

Modicon ABE7 connection sub-bases

Connection sub-bases for I/O modules for Modicon Quantum platforms

Information retained for the Modicon Quantum range no longer commercially available

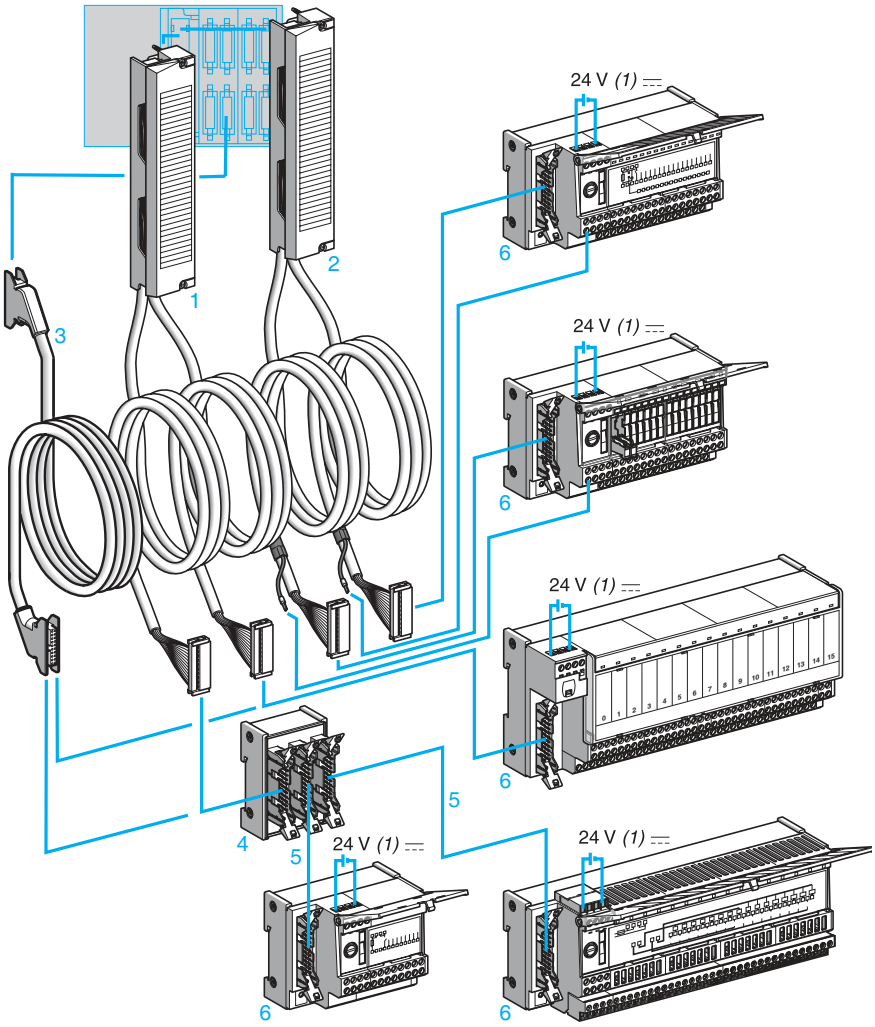

1-2 Cabled connectors combining a standard screw terminal block, two multicore (AWG 22) cables and two 20-way HE 10 connectors. Two types of cabled connector are available:
- ABFM32H300 1 cabled connectors for I/O modules (32 channels) on the Modicon Quantum platform, with 2 HE 10 connectors each integrating 16 channels
- ABFM32H301 2 cabled connector I/O modules (32 channels) on the Modicon Quantum platform, with 2 HE 10 connectors each integrating 16 channels and an external power supply with a direct connection to the terminal marked *(1)* on the sub-bases 6

3 Cordsets (AWG 22) equipped with a 20-way HE 10 connector **TSXCDP053/●03** for 96-channel I/O modules (connected on six 20-way HE 10 connectors)

4 **ABE7ACC02** splitter box (16 to 2 x 8 channels) for use with 8-channel sub-bases

5 A single type of cordset equipped with 20-way HE 10 connectors, irrespective of the 8 or 16-channel modularity. The HE 10 connectors can be molded **TSXCDP●●●** or insulation piercing **ABFH20H●●●**.

6 8- and 16-channel connection sub-bases from the Modicon ABE 7 range

(1) The 24 V ⎓ power supply for the Quantum I/O modules must only be connected via Telefast ABE7 sub-bases. The 0 V ⎓ connections must be equipotential.

Selection guide
pages 10 to 15

References
pages 16 to 21

Telefast Pre-wired System

Modicon ABE7 connection sub-bases

Connection sub-bases for I/O modules for Modicon Quantum platforms

Information retained for the Modicon Quantum range no longer commercially available

Quantum I/O modules									
	24 V ⎓ discrete I/O					**Analog I/O**			
	Inputs	Outputs		Inputs	Outputs	Inputs	Outputs		
	32 I	32 Q		96 I	96 Q	8 I	4 Q		8 Q
	140DDI35300 140DDI85300	140DDO35300		140DDI36400	140DDO36400	140AVI03000 140ACI03000	140AVO02000	140ACO02000	140ACO13000
Cabled connectors	ABFM32H300		ABFM32H301	–		ABFM08S201	–	–	–
Cordsets	–			TSXCDP053, TSXCDP103, TSXCDP203, TSXCDP303, TSXCDP503		–			
Passive sub-bases									
8 channels ABE7H08R21	(1)			(1)					
16 channels ABE7H16R10, ABE7H16R11, ABE7H16R50, ABE7H16R20, ABE7H16R21, ABE7H16R31 ABE7H16C10, ABE7H16C11, ABE7H16C21, ABE7H16C31									
ABE7H16S21									
ABE7H16R23	(2)								
ABE7H16F43									
ABE7H16S43	(3)								
Input adapter sub-bases									
16 channels ABE7S16E2B1, ABE7P16F310, ABE7P16F312									
Output adapter sub-bases									
8 channels ABE7R08S111, ABE7R08S210		(1)			(1)				
16 channels ABE7R16S111, ABE7R16S210, ABE7R16S212									
ABE7R16T111, ABE7R16T210, ABE7R16T212, ABE7R16T230, ABE7R16T330, ABE7R16T370 ABE7P16T111, ABE7P16T210, ABE7P16T230, ABE7P16T214, ABE7P16T215, ABE7P16T330, ABE7P16T334, ABE7P16T318									
ABE7S16S2B0, ABE7S16S1B2									
Sub-bases for analog I/O									
4 channels ABE7CPA21									
8 channels ABE7CPA02									
ABE7CPA03									
ABE7CPA31									

ABFM32H300, ABFM32H301 cabled connectors

TSXCDP053, TSXCDP103, TSXCDP203, TSXCDP303, TSXCDP503 cordsets

***Note**: For harsh environments, **Modicon ABE9** IP67 passive splitter boxes can be used in combination with I/O modules on the Modicon Quantum platform. Main characteristics:*
- 8/16 I/O channels
- Connection of 1 to 16 sensors/actuators
- M12 I/O connectors
- Connection to the PLC by connector or multicore cable
- IP67 degree of protection
- Plastic case
See pages 40 and 42.

(1) With the ABE7ACC02 splitter sub-base (16 channels as 2 x 8)
(2) With 140DDI35300 module only
(3) With 140DDI85300 module only

Information retained for after-sales service

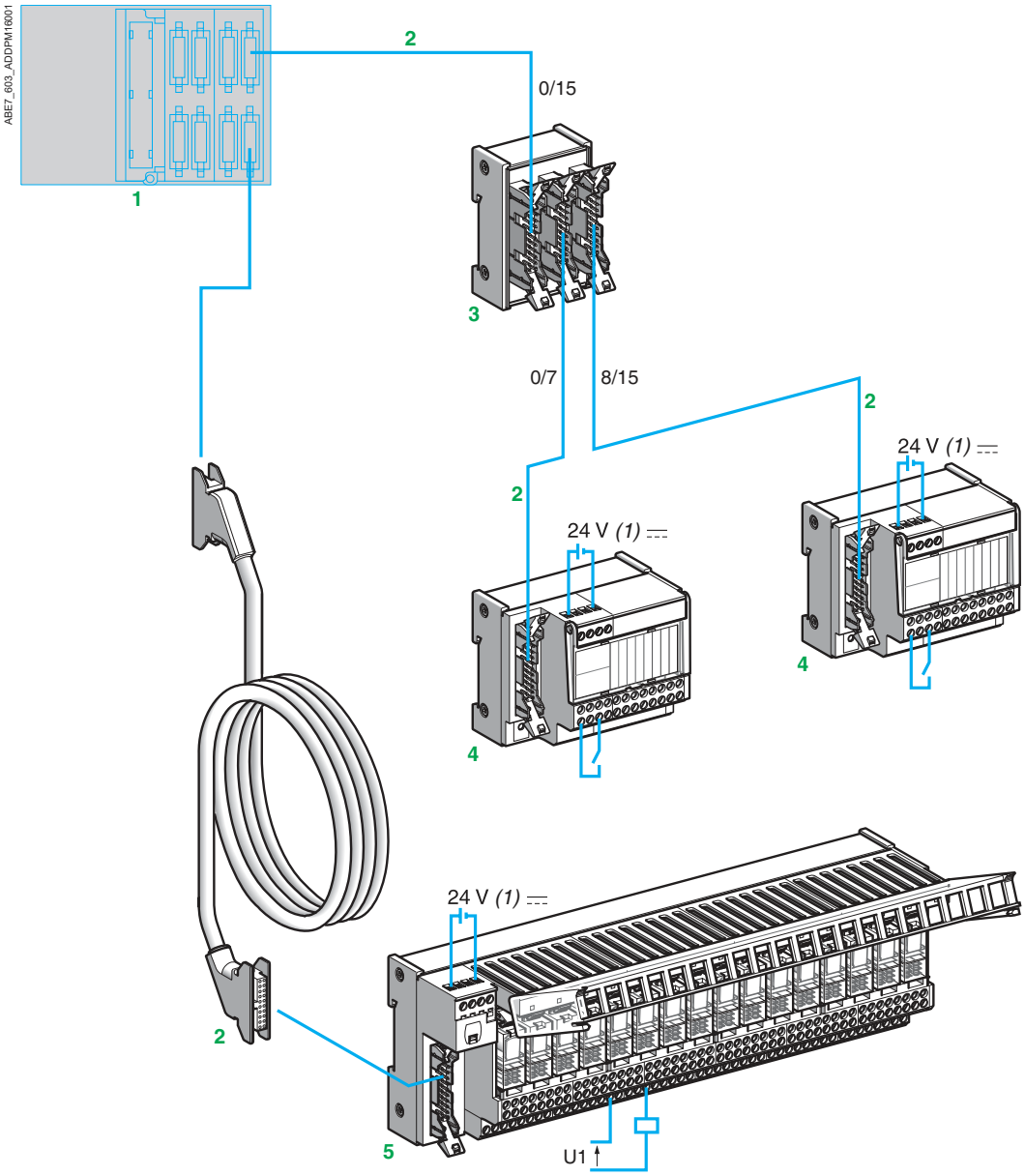

1 I/O modules equipped with HE 10 connectors. Available in modules of 8, 12, 28, and 64 I/O.
2 A single type of cordset equipped with 20-way HE 10 connectors, irrespective of the 8-, 12-, or 16-channel modularity. The HE 10 connectors can be molded (TSXCDP●●●) or insulation piercing (ABFH20H●●●). These cordsets are available in 0.5 m/*1.64 ft*, 1 m/*3.28 ft*, 2 m/*6.56 ft*, 3 m/*9.84 ft*, and 5 m/*16.4 ft* lengths. They use AWG 28 (0.08 mm²) for connecting inputs and relay sub-bases, and AWG 22 (0.324 mm²) for direct connection of 0.5 A outputs of 8 and 28 I/O modules.
3 16 channels may be split into 2 x 8 channels using splitter sub-base ABE7ACC02.
4-5 8-channel and 16-channel sub-bases respectively.

(1) The 24 V ⎓ power supply is connected using Telefast sub-bases only. The 0 V ⎓ connections must be equipotential.

Selection guide
pages 10 to 15

References
pages 16 to 21

Telefast Pre-wired System

Modicon ABE7 connection sub-bases

Connection sub-bases for TSX Micro PLCs

Information retained for after-sales service

Combinations

I/O modules for TSX Micro PLCs

		24 V ⎓ discrete							Counter		Analog and counter
		I/O					Inputs	Outputs	Auxiliary inputs	Counter	
		8 I + 8 Q	1 x 16 I	1 x 12 Q	2 x 16 I	2 x 16 Q	1 x 12 I	1 x 8 Q	–	–	–
Integrated in the PLCs		–	TSX3710128DTK1		TSX3710164DTK1		–	–	–	–	TSX3722001
		–	–	–	–	–	–	–	–	–	TSX3722011
With modules		TSX DMZ16DTK	TSX DMZ28DTK		TSX DMZ64DTK		TSX DEZ12D2K	TSX DSZ08T2K	TSX CTZ1A	TSX CTZ1A	–
		–	–	–	–	–	–	–	TSX CTZ1A	TSX CTZ1A	–
Connection sub-bases											
8 channels	ABE7H08R21		*(1)*		*(1)*	*(1)*		■			
16 channels	ABE7H16R20, ABE7H16R21, ABE7H16S21, ABE7H16R31, ABE7H16R23 ABE7H16C10, ABE7H16C11, ABE7H16C21, ABE7H16C31 ABE7H20E, ABE7H20E100, ABE7H20E200 *(2)*		■		■	■			ABE 7H16R20 *(3)*		
	ABE7H16S21		■		■	■					
	ABE7H16R23		■		■						
	ABE7H16F43					■					
	ABE7H16S43		■		■						
Input adapter sub-bases											
16 channels	ABE7S16E2B1, ABE7S16E2E1, ABE7S16E2E0, ABE7S16E2F0, ABE7S16E2M0		■		■		*(4)*				
	ABE7P16F310, ABE7P16F312		■		■		*(4)*				
Input and output adapter sub-bases											
16 channels 8 I + 8 Q	ABE7R16M111		■								
Output adapter sub-bases											
8 channels	ABE7R08S111, ABE7R08S210					*(1)*		■			
16 channels	ABE7S16S2B0, ABE7S16S1B2					■					
	ABE7R16S111, ABE7R16S210, ABE7R16S212			*(5)*		■					
	ABE7R16T111, ABE7R16T210, ABE7R16T212, ABE7R16T230, ABE7R16T330, ABE7R16T370			*(5)*		■					
	ABE7P16T111, ABE7P16T210, ABE7P16T230, ABE7P16T214, ABE7P16T215, ABE7P16T330, ABE7P16T334, ABE7P16T318			*(5)*		■					
Sub-bases for analog/counter I/O											
	ABE7CPA01									■	■
	ABE7CPA11										
	ABE7CPA02										
	ABE7CPA03										

(1) Using splitter sub-base ABE7ACC02, which allows 16 channels to be split into 2 x 8 channels.
(2) ABE7H20E100 and ABE7H20E200 Economy sub-bases including cordset.
(3) With TSXCTZ2A module, to be used with sub-bases with no LED.
(4) The last four channels are not used.
(5) The last four channels are not used and remain at state 1.

■ Preassembled cordsets

Telefast Pre-wired System

Modicon ABE7 connection sub-bases

Connection sub-bases for Modicon STB (distributed I/O solution)

Presentation *(1)*

Using the Telefast connector or adapter system rationalizes and simplifies electrical enclosure wiring.
Far less space is required in the enclosure and the Modicon ABE7 sub-base replaces the connection terminals at the bottom of the enclosure.
The Telefast wiring system is particularly suitable for applications requiring:

- 48 V ⎓ and 48 V ∿ I/O
- A large number of 115 V ∿ and 230 V ∿ I/O
- A large number of relay outputs

Connection of Modicon STB I/O modules to the Telefast system differs according to the type of module:

- **STBDDI3725** and **STBDDO3705** 16-channel digital I/O modules: connection via Telefast HE 10 connectors and their associated Telefast cables. These connection components must be ordered separately (see description below and combinations on page 39).
- Other Modicon STB digital and analog I/O modules: connection via screw or spring-type 5/6-way removable connectors, supplied with the I/O modules and the associated pre-wired cables. The latter must be ordered separately (see below).

Description *(1)*

STBDDI3725 and STBDDO3705 16-channel digital I/O modules

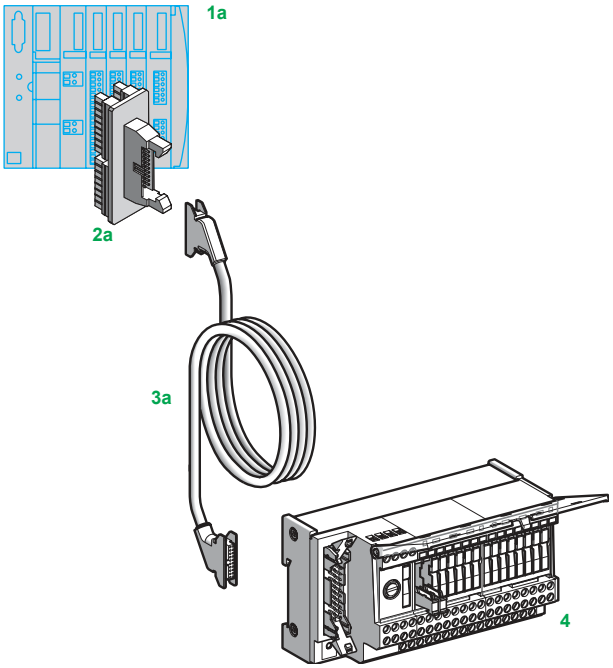

1a Modicon STB I/O island incorporating a STBDDI3725 or STBDDO3705 module with 16 I/O
2a STBXTS5●10 (DDI) or STBXTS6●90 (DDO) HE10 connector
3a TSXCDP●02 or TSXCDP●03 connection cable equipped with two 20-way HE10 connectors
4 Modicon ABE7 connection or adapter sub-base (see compatibility table on page 39)

Other Modicon STB digital and analog I/O modules

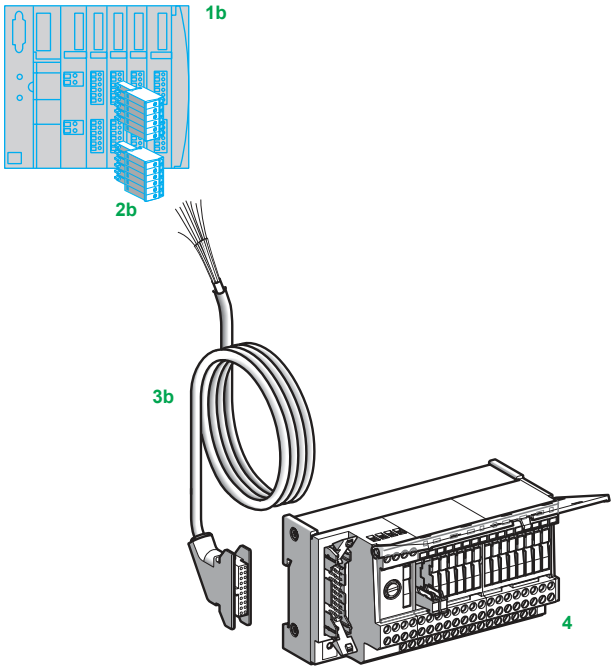

1b Modicon STB I/O island incorporating a digital I/O module STBDDI/DDO●●●●K (except for 16-channel modules) or an STBAVI/ACI/ART/AVO/ACO●●●●K analog I/O module
2b Screw or spring-type 5/6-way removable connectors, supplied with the STB I/O module
3b TSXCDP301/501/1001 pre-wired cable (3, 5, or 10 m/*9.84, 16.4, or 32.81 ft*), with HE10 connector at one end and flying leads at the other end (cross-section 0.324 mm², AWG24)
4 Modicon ABE7 connection or adapter sub-base

Redundancy solution for Modicon STB I/O *(1)*

Two Modicon STB I/O modules of the same type, located in two separate islands, can be connected to a single Telefast pre-wired sub-base (I/O redundancy). This configuration is used, for example, in the context of a Premium Hot Standby architecture (please refer to our “Modicon Premium automation platform” catalog).
Digital I/O modules are connected via an **ABE7ACC11** (inputs) or **ABE7ACC10** (outputs) redundancy sub-base and the same connectors and cables or ribbon cables used for single connections.
STB analog I/O modules are connected via JM Concept JK 3000 N2 (inputs) and GK 3000 D1 (outputs) analog I/O multiplexers.

(1) If you require any more information on the Telefast pre-wired system, please contact our Customer Care Center.

Telefast Pre-wired System

Modicon ABE7 connection sub-bases

Connection sub-bases for Modicon STB (distributed I/O solution)

Combinations of STB modules with 16 digital I/O and Modicon ABE7 sub-bases *(1) (2)*

Modicon ABE7 sub-bases (Item 4)		STBDDI3725 (item 1a)	STBDDO3705 (item 1a)	Ribbon cables (item 3a)	Cables (item 3a)
		Associated STBXTS●●●● connector (item 2a)			
Passive connection sub-bases (16-channel)					
Universal	ABE7H16R10, ABE7H16R11, ABE7H16R50, ABE7H16R20, ABE7H16R21, ABE7H16R31, ABE7H16R23	STBXTS6510	STBXTS6610	TSXCDP102, TSXCDP202, TSXCDP302 (100 mA total max.) *(3)* or ABFH20H100, ABFH20H200 (> 500 mA total max.)	TSXCDP053, TSXCDP103, TSXCDP203, TSXCDP303, TSXCDP503 (> 500 mA total max.) *(4)*
	ABE7H16S21				
	ABE7H16S43				
	ABE7H16F43		STBXTS6610		
Miniature	ABE7H16C10	STBXTS6510			
	ABE7H16C11				
	ABE7H16C21				
	ABE7H16C31				
Input adapter active sub-bases (16-channel)					
Voltage V	Modicon ABE7 sub-base				
48 ⎓	ABE7S16E2E1	STBXTS6510		TSXCDP102, TSXCDP202, TSXCDP302, (100 mA total max.) *(3)* or ABFH20H100, ABFH20H200 (> 500 mA total max.)	TSXCDP053, TSXCDP103, TSXCDP203, TSXCDP303, TSXCDP503 (> 500 mA total max.) *(4)*
48 ∼	ABE7S16E2E0				
115 ∼	ABE7S16E2F0				
230…240 ∼	ABE7S16E2M0				
	ABE7P16F310				
	ABE7P16F312				

Output adapter active sub-bases (16-channel)

Type	Voltage V	Current per channel A	Modicon sub-base ABE7	Relay				
Relay	24 ⎓	0.5	ABE7S16S2B0	–		STBXTS6610	TSXCDP102, TSXCDP202, TSXCDP302, (100 mA total max.) *(3)* or ABFH20H100, ABFH20H200 (> 500 mA total max.)	TSXCDP053, TSXCDP103, TSXCDP203, TSXCDP303, TSXCDP503 (> 500 mA total max.) *(4)*
		0.5	ABE7S16S1B2	–				
		⩾ 0.7	ABE7P16T111, ABE7P16T210, ABE7P16T230, ABE7P16T214, ABE7P16T215, ABE7P16T330, ABE7P16T334, ABE7P16T318 *(5)*	–				
	48 ⎓	0.5	ABE7P16T210, ABE7P16T230, ABE7P16T214, ABE7P16T215 *(5)*	ABS7C2E				
	48 ∼	0.5	ABE7P16T210, ABE7P16T230, ABE7P16T214, ABE7P16T215 *(5)*	ABS7SA2M				
	115 ∼	0.5	ABE7P16T210, ABE7P16T230, ABE7P16T214, ABE7P16T215 *(5)*	ABS7SA2M				
	230...240 ∼	0.5	ABE7P16T210, ABE7P16T230, ABE7P16T214, ABE7P16T215 *(5)*	ABS7SA2M				
Solid-state	24...240 ∼	1.5	ABE7P16T330, ABE7P16T334, ABE7P16T318	ABS7SA3MA				
	24...48 ⎓	1.5	ABE7P16T330, ABE7P16T334, ABE7P16T318	ABS7SC3E				
	24 ⎓	2	ABE7P16T330, ABE7P16T334, ABE7P16T318	ABS7SC3BA				
Economy relay	30 ⎓	2	ABE7R16S111, ABE7R16S210, ABE7R16S212	–				
		2..5	ABE7R16S210, ABE7R16S212	–				
	230 ∼	2	ABE7R16S111, ABE7R16S210, ABE7R16S212	–				
		2..5	ABE7R16S210, ABE7R16S212	–				

	Compatible
	Not compatible

⚠ The STB module can provide the 24 V ⎓ power to the Modicon ABE7 block provided the current does not exceed 50 mA per group of 4 channels. Otherwise an external power supply will be required and only the reference 0 V should be connected between the STB module and the ABE7 block.

(1) Combinations given for 16-channel Modicon STB digital I/O modules (STBDDI3725, STBDDO3705). For other Modicon STB modules (1b), connectors (2b) are included with the modules and the connection is made via TSXCDP●●●●● pre-wired cable (3b). See page 38.
(2) The item numbers indicated in this table correspond to the item numbers mentioned in the description on page 38.
(3) In 1 to 5 m (3.28 to 16.4 ft) lengths.
(4) In 0.5 m to 5 m (1.64 to 16.4 ft) lengths.
(5) Empty sub-bases.

Telefast Pre-wired System
Modicon ABE9 passive splitter boxes - IP67

Splitter box and interface type		IP67 passive splitter boxes		
Fieldbus type		–		
Inputs/outputs	Discrete	8 I/O (4 channels), 16 I/O (8 channels)		
	Analog	–		
Functions		Connection of 1 to 16 sensors/actuators LED indicator depending on model		
Connections	Sensors/actuators	Female M12, 5-way connectors		
	Control system	Male M23 connector	Multicore cable	
			Length 5 m *(16.4 ft)*	Length 10 m *(32.81 ft)*
Housing type		Plastic		
Module type		ABE 9C12●●C23	ABE 9C12●●L05	ABE 9C12●●L10
Page		42		

Telefast Pre-wired System

Modicon ABE9 passive splitter boxes - IP67

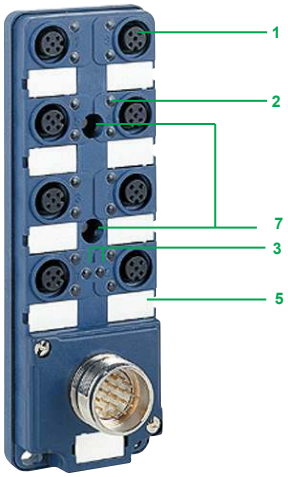

ABE9C12●●C23

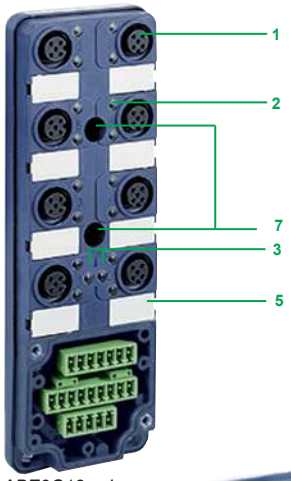

ABE9C12●●L●●

Presentation

■ ABE9 passive splitter boxes for M12 connectors make it possible to eliminate long and difficult cabling operations. Their modularity and dimensions mean they are the ideal solution for a wide variety of customer applications.
Connection to the processing unit can either be made by connector or by multicore cable of different lengths.
IP67 protection allows these products to be used within processes or machines in harsh environments (splashing water, oil, dust, etc.).
The splitter boxes, available in 4 or 8-channel versions, allow connection of up to 16 signals maximum, depending on the version (2 per channel).

The characteristics of ABE9C12 splitter boxes are as follows:
■ Connection of sensors and actuators using M12, 5-way connectors
■ Modularity: 4 or 8 channels
■ Mounting system and connection to the processing unit conforming to market standards:
□ center-to-center distances
□ M23, 19-way connector, enabling the use of preassembled cables in order to reduce installation time and the risk of error
□ multicore cable, 5 or 10 meters long. The splitter box comprises a connection cover equipped with plug-in terminals, which provides considerable flexibility for replacing damaged parts and changing the cable length.
ABE9C12●●L●● sub-bases enable the use of 2 separate commons, which can be used for emergency stop management, for example. This function is accessible beneath the terminal cover using 2 removable links. If both links are removed, the 2 supplies become independent.

The use of a Y-connector allows 2 signals to be connected to the same M12 channel on the splitter box. For example, the **ABE9C1281** splitter box (8 channels) allows 16 signals to be connected to the processing unit.
The Y-connector is available in 2 versions:
■ M12-M12 for connection of two M12 connectors to a single M12 channel on the splitter box
■ M8-M12 for connection of two M8 connectors to a single M12 channel on the splitter box

Complete reference	= Splitter box only	+ Connector with cable
ABE9C1240L05	= ABE9C1240M	+ **ABE9XCA1405** *(1)*
ABE9C1240L10	= ABE9C1240M	+ ABE9XCA1410
ABE9C1241L05	= ABE9C1241M	+ **ABE9XCA1405** *(1)*
ABE9C1241L10	= ABE9C1241M	+ ABE9XCA1410
ABE9C1280L05	= ABE9C1280M	+ ABE9XCA1805
ABE9C1280L10	= ABE9C1280M	+ ABE9XCA1810
ABE9C1281L05	= ABE9C1281M	+ ABE9XCA1805
ABE9C1281L10	= ABE9C1281M	+ ABE9XCA1810
Connector only		
ABE9CM12C		

Description

ABE9C12●●C23 passive splitter boxes have the following on the front face:
1 Four or eight M12 female connectors (depending on model) for connection of sensors and actuators (2 channels per connector)
2 Eight or sixteen channel status indicator lights (depending on model)
3 One “Power on” indicator light on the splitter box (depending on model)
4 One M23, 19-way male connector
5 Four or eight channel marker labels
6 One splitter box marker label
7 Splitter box fixing holes

ABE9C12●●L●● passive splitter boxes have the following on the front face:
1 Four or eight M12 female connectors (depending on model) for connection of sensors and actuators (2 channels per connector)
2 Eight or sixteen channel status indicator lights (depending on model)
3 Two “Power on” indicator lights on the splitter box (depending on model)
4 One removable connection cover equipped with plug-in terminals
5 Four or eight channel marker labels
6 One splitter box marker label
7 Splitter box fixing holes

(1) Product no longer commercially available, replaced by ABE9XCA1410.

Telefast Pre-wired System

Modicon ABE9 passive splitter boxes - IP67

ABE9C124●C23

ABE9C128●C23

ABE9C124●L●●

ABE9C128●L●●

ABE9C128●M

ABE9XCA1●●●

FTXCY1212

References

Splitter boxes with connection by M23 connector

Number of channels	Connection by	LED indicator	Reference	Weight kg *lb*
4	4 x M12 female connectors	Yes	ABE9C1241C23	0.080 *0.176*
8	8 x M12 female connectors	Yes	ABE9C1281C23	0.140 *0.309*
		No	ABE9C1280C23	0.140 *0.309*

Splitter boxes with connection by cable

Number of channels	Connection by	Length m *ft*	LED indicator	Reference	Weight kg *lb*
4	4 x M12 female connectors	5 *16.4*	Yes	ABE9C1241L05	0.680 *1.499*
			No	ABE9C1240L05	0.680 *1.499*
		10 *32.8*	Yes	ABE9C1241L10	1.700 *3.747*
			No	ABE9C1240L10	1.700 *3.747*
8	8 x M12 female connectors	5 *16.4*	Yes	ABE9C1281L05	1.610 *3.549*
			No	ABE9C1280L05	1.610 *3.549*
		10 *32.8*	Yes	ABE9C1281L10	3.060 *6.746*
			No	ABE9C1280L10	3.060 *6.746*

Splitter boxes only, M12

Number of channels	For use with connector		LED indicator	Reference	Weight kg *lb*
	Terminal block	With cable			
4	ABE9CM12C	ABE9XCA14●●	Yes	ABE9C1241M	0.060 *0.132*
			No	ABE9C1240M	0.060 *0.132*
8	ABE9CM12C	ABE9XCA18●●	Yes	ABE9C1281M	0.100 *0.220*
			No	ABE9C1280M	0.100 *0.220*

Separate components

Type	No. of channels	For use with splitter box	Length m *ft*	Reference	Weight kg *lb*
Terminal block connector *(1)*	–	ABE9C124●M ABE9C128●M	–	ABE9CM12C	0.040 *0.088*
Connectors with cable	4	ABE9C124●M	10 *32.8*	ABE9XCA1410	2.080 *4.585*
	8	ABE9C128●M	5 *16.4*	ABE9XCA1805	1.510 *3.328*
			10 *32.8*	ABE9XCA1810	2.240 *4.938*

Accessories

Description	Composition	Reference	Weight kg *lb*
Y-connectors	Connection of 2 x M8 connectors to M12 connector on splitter box	FTXCY1208	0.020 *0.044*
	Connection of 2 x M12 connectors to M12 connector on splitter box	FTXCY1212	0.030 *0.066*

(1) To be cabled by user.

Telefast Pre-wired system

Modicon ABE7 IP20 connection sub-bases
Modicon ABE9 IP67 passive splitter boxes

Product reference index

#

140ACI03000 35
140ACO02000 35
140ACO13000 35
140AVI03000 35
140AVO02000 35
140DDI35300 35
140DDI36400 35
140DDI85300 35
140DDO35300 35
140DDO36400 35

A

ABC6HE20F 22
ABE7ACC02 22
ABE7ACC10 22
ABE7ACC11 22
ABE7ACC12 23
ABE7ACC21 9, 22
ABE7BV10 22
ABE7BV20 22
ABE7CPA01 12, 19, 33, 37
ABE7CPA02 12, 19, 28, 29, 32, 35
ABE7CPA03 12, 19, 28, 29, 32, 35
ABE7CPA21 12, 19, 28, 29, 32, 35
ABE7CPA31 12, 19, 28, 29, 32, 35
ABE7CPA31E 12, 19, 28, 29
ABE7CPA410 12, 19, 28, 29
ABE7CPA412 12, 19, 28, 29
ABE7FU012 22
ABE7FU030 22
ABE7FU050 22
ABE7FU100 22
ABE7FU200 22
ABE7FU400 22
ABE7FU630 22
ABE7H08R21 10, 16, 28, 31, 33, 35, 37
ABE7H16C10 10, 16, 24, 25, 28, 31, 33, 37, 39
ABE7H16C11 10, 16, 24, 25, 28, 31, 33, 37, 39
ABE7H16C21 10, 16, 24, 25, 28, 31, 33, 37, 39
ABE7H16C31 10, 16, 24, 25, 28, 31, 33, 37, 39
ABE7H16F43 11, 16, 25, 28, 31, 35, 37, 39
ABE7H16R10 16, 25, 28, 31, 39
ABE7H16R11 16, 25, 28, 31, 39
ABE7H16R20 10, 16, 25, 28, 31, 33, 37, 39
ABE7H16R21 10, 16, 25, 28, 31, 33, 37, 39
ABE7H16R23 10, 16, 28, 31, 33, 35, 37, 39
ABE7H16R31 11, 16, 25, 31, 33, 37, 39
ABE7H16R50 10, 16, 25, 28, 31, 39
ABE7H16S21 10, 16, 25, 28, 28, 31, 33, 35, 37, 39
ABE7H16S31 28
ABE7H16S43 11, 16, 25, 28, 31, 35, 37, 39
ABE7H20E 31, 33, 37
ABE7H20E000 10, 16, 24, 25
ABE7H20E100 16, 31, 33, 37
ABE7H20E200 16, 31, 33, 37
ABE7H34E100 16, 28
ABE7H34E200 16, 28
ABE7P16F310 11, 18, 25, 35, 37, 39
ABE7P16F312 11, 18, 25, 35, 37, 39
ABE7P16T111 9, 11, 18, 24, 25, 28, 31, 37, 39
ABE7P16T210 9, 11, 18, 25, 28, 28, 31, 37, 39
ABE7P16T214 9, 11, 18, 25, 28, 31, 37, 39
ABE7P16T215 9, 11, 18, 25, 28, 31, 37, 39
ABE7P16T230 11, 18, 28, 31, 37, 39
ABE7P16T318 9, 11, 18, 25, 28, 31, 37, 39
ABE7P16T330 9, 11, 18, 25, 28, 31, 37, 39
ABE7P16T334 9, 11, 18, 25, 28, 31, 37, 39
ABE7R08S111 11, 17, 28, 31, 35, 37
ABE7R08S210 11, 17, 28, 31, 35, 37
ABE7R16M111 9, 10, 18, 37
ABE7R16S111 11, 17, 24, 25, 28, 31, 35, 37, 39
ABE7R16S210 11, 17, 25, 28, 31, 35, 37, 39
ABE7R16S212 11, 17, 25, 28, 31, 35, 37, 39
ABE7R16T111 9, 11, 18, 24, 25, 28, 31, 37
ABE7R16T210 9, 11, 18, 25, 28, 31, 37
ABE7R16T212 9, 11, 18, 25, 28, 31, 37
ABE7R16T230 9, 11, 18, 25, 28, 31, 37
ABE7R16T330 9, 11, 18, 25, 28, 31, 37
ABE7R16T370 9, 11, 18, 25, 28, 31, 37
ABE7S16E2B1 17, 25, 28, 31, 35, 37
ABE7S16E2E0 17, 25, 28, 31, 37, 39
ABE7S16E2E1 11, 17, 25, 28, 31, 37, 39

Telefast Pre-wired system

Modicon ABE7 IP20 connection sub-bases
Modicon ABE9 IP67 passive splitter boxes

Product reference index

ABE7S16E2F0 11 17 25 28 31 37 39
ABE7S16E2M0 11 17 25 28 31 37 39
ABE7S16S1B2 11 17 25 28 31 37 39
ABE7S16S2B0 11 17 25 28 31 35 37 39
ABE7TES160 22
ABE9C1240L05 42 43
ABE9C1240L10 42 43
ABE9C1240M 42 43
ABE9C1241C23 43
ABE9C1241L05 42 43
ABE9C1241L10 42 43
ABE9C1241M 42 43
ABE9C1280C23 43
ABE9C1280L05 42 43
ABE9C1280L10 42 43
ABE9C1280M 42 43
ABE9C1281C23 43
ABE9C1281L05 42 43
ABE9C1281L10 42 43
ABE9C1281M 42 43
ABE9CM12C 42 43
ABE9XCA1410 42 43
ABE9XCA1805 42 43
ABE9XCA1810 42 43
ABFC08R02B 22
ABFC08R02R 22
ABFH20H100 20 31
ABFH20H1000 20
ABFH20H200 20 31
ABFH20H301 20
ABFH34M100 20
ABFH34M200 20
ABFM08S201 21 35
ABFM32H300 21 35
ABFM32H301 21 35
ABFT20E050 20
ABFT20E100 20
ABFT20E200 20
ABFTE20EP100 20
ABFTE20EP200 20
ABFTE20EP300 20
ABFTE20SP100 20
ABFTE20SP200 20
ABFTE20SP300 20
ABR7S11 9 23
ABR7S21 9 23
ABR7S23 9 23
ABR7S33 9 23
ABS7C2E 39
ABS7EA3B5 23
ABS7EA3E5 23
ABS7EA3F5 23
ABS7EA3M5 23
ABS7EC3B2 23
ABS7EC3E2 23
ABS7SA2M 9 23 39
ABS7SA3M 9 23
ABS7SA3MA 39
ABS7SC1B 9 23
ABS7SC2E 9 23
ABS7SC3BA 9 23 39
ABS7SC3E 9 23 39
AR1SB3 22

B

BMEAHI0812 29
BMEAHO0412 29
BMXAMI0410 29
BMXAMI0800 29
BMXAMI0810 29
BMXAMO0210 29
BMXAMO0410 29
BMXAMO0802 29
BMXART0414 29
BMXART0814 29
BMXDDI3202K 28
BMXDDI6402K 28
BMXDDM3202K 28
BMXDDO3202K 28
BMXDDO6402K 28

F

FTXCY1208 43
FTXCY1212 43

S

STBDDI3725 39
STBDDO3705 39

T

TM221M32TK 24
TM221ME32TK 24
TM3DI16K 24 25
TM3DI32K 24 25
TM3DQ16TK 25
TM3DQ16UK 24 25
TM3DQ32TK 25
TM3DQ32UK 24 25
TSXCAP030 33
TSXCDP053 21 31 33 35
TSXCDP102 39
TSXCDP103 21 31 33 35
TSXCDP202 39
TSXCDP203 21 31 33 35
TSXCDP302 39
TSXCDP303 21 31 33 35
TSXCDP503 21 31 33 35
TWDFCW30K 20
TWDFCW50K 20

Life Is On | Schneider Electric

Learn more about our products at
www.se.com

The information provided in this documentation contains general descriptions and/or technical characteristics of the performance of the products contained herein. This documentation is not intended as a substitute for and is not to be used for determining suitability or reliability of these products for specific user applications. It is the duty of any such user or integrator to perform the appropriate and complete risk analysis, evaluation and testing of the products with respect to the relevant specific application or use thereof. Neither Schneider Electric nor any of its affiliates or subsidiaries shall be responsible or liable for misuse of the information contained herein.

Design: Schneider Electric
Photos: Schneider Electric

Schneider Electric Industries SAS
Head Office
35, rue Joseph Monier - CS 30323
F-92500 Rueil-Malmaison Cedex
France

DIA3ED2160602EN
October 2022 - V4.0