Product data sheet

Specifications

E-Stop legend plate, Harmony 9001K, KR/SKR18, metal, yellow background, marked "Emergency Stop" in silver, 30mm hole

9001KN2018Y

Product availability: Stock - Normally stocked in distribution facility

Main

Range of Product	Harmony 9001K
Product or Component Type	Legend plate
Accessory / separate part category	Marking accessory
Accessory / separate part destination	Control and signalling units Ø 30 mm (metal range)
Marking	Black EMERGENCY STOP yellow
Label dimensions	Ø 50 mm
User Language	English

Complementary

Material	Aluminium
Product Weight	0.011 lb(US) (0.005 kg)
Size	30 mm
Colour of marking	Black
Background colour	Yellow
Marking	EMERGENCY STOP

Ordering and shipping details

Category	US10CS121426
Discount Schedule	0CS1
GTIN	3606487209232
Returnability	Yes
Country of origin	MX

Packing Units

Unit Type of Package 1	PCE
Nbr. of units in pkg.	1
Package 1 Height	0.04 in (0.1 cm)
Package 1 Width	8.0 in (20.3 cm)
Package 1 Length	10.0 in (25.4 cm)
Package weight(Lbs)	0.2 oz (4.8 g)

Price is “List Price” and may be subject to a trade discount – check with your local distributor or retailer for actual price.

Disclaimer: This documentation is not intended as a substitute for and is not to be used for determining suitability or reliability of these products for specific user applications

Contractual warranty

Warranty (in months)	18

Environmental Data

Schneider Electric aims to achieve Net Zero status by 2050 through supply chain partnerships, lower impact materials, and circularity via our ongoing “Use Better, Use Longer, Use Again” campaign to extend product lifetimes and recyclability.

Environmental Data explained

How we assess product sustainability

Use Better

Materials and Substances

Packaging made with recycled cardboard	**Yes**
Packaging without single use plastic	**Yes**
EU RoHS Directive	**Compliant**
REACh Regulation	**Free of Substances of Very High Concern above the threshold**
California proposition 65	**WARNING: This product can expose you to chemicals including: Lead and lead compounds, which is known to the State of California to cause cancer and birth defects or other reproductive harm. For more information go to www.P65Warnings.ca.gov**

Use Longer

Lifetime extension

Repair	**No**

Use Again

Repack and remanufacture

Take-back	**No**

Dimensions Drawings

Dimensions

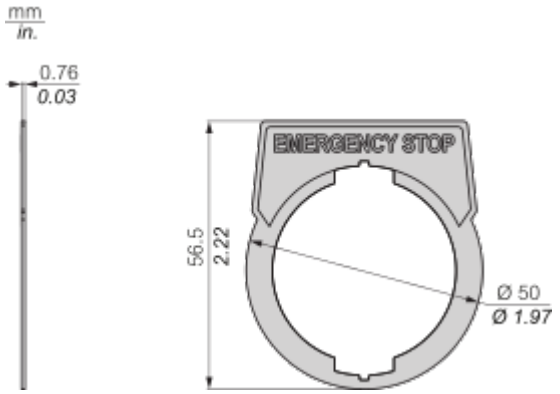

Technical Illustration

Dimensions

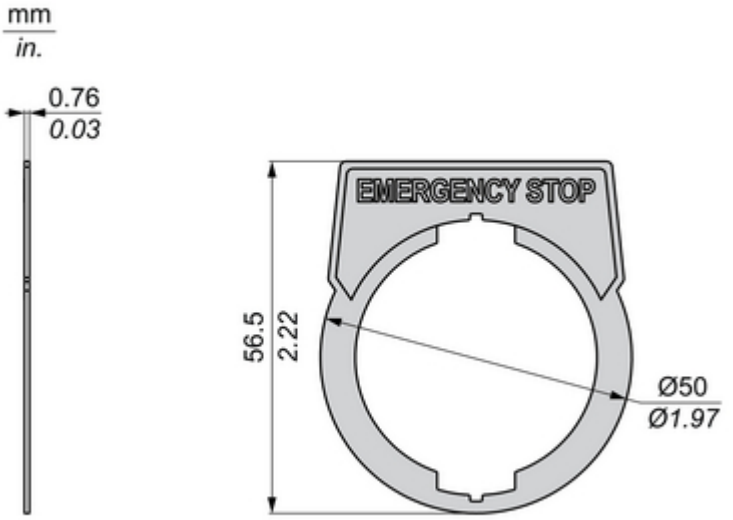

Offer Marketing Illustration

Product benefits / Features

Offer Marketing Illustration

Product benefits / Features

Image of product / Alternate images

Alternative

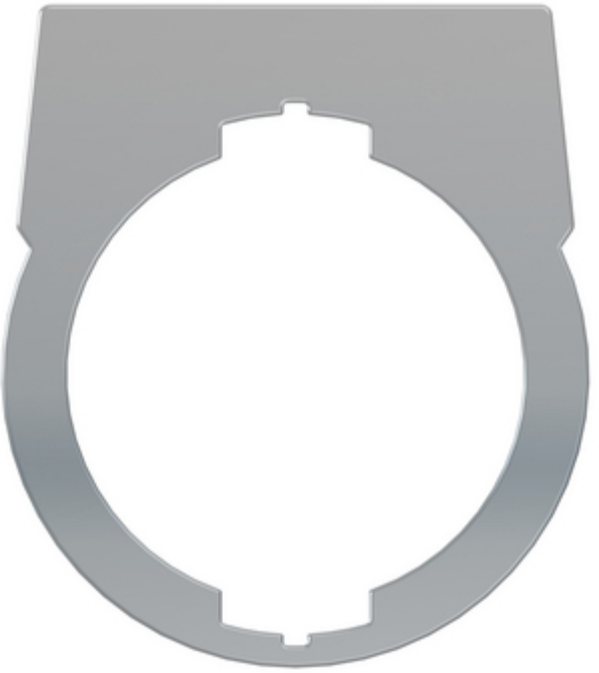

EMERGENCY STOP