Product data sheet
Characteristics

784XDXCL-120A
Power relay, SE Relays, 15A, 4PDT, 120 VAC, clear cover with LED indicator

Main

Product Range	Legacy
Product Type	Power relay
Switch Function	4PDT
Contact Composition	4 NO + 4 NC

Complementary

Input Current	15 A
Contacts Material	Silver alloy, gold flashed
Local Signalling	LED Flag
Minimum Switching Current	10 mA 17 V
Coil Resistance	2100 Ohm
Input voltage	120 V AC
Drop-out Voltage Threshold	>= 0.15 Uc AC >= 0.1 Uc DC
Rated Operational Current	15 A at 120...277 V AC conforming to UL 15 A at 28 V DC conforming to UL 15 A at 120/150 V AC conforming to CSA 10 A at 151/277 V AC conforming to CSA 15 A at 28 V DC conforming to CSA 15 A at 250 V AC (NO) conforming to IEC 15 A at 28 V DC (NO) conforming to IEC 7.55 A at 250 V AC (NC) conforming to IEC 7.55 A at 28 V DC (NC) conforming to IEC
Power consumption in W	1.95 W DC
Power consumption in VA	2.85 VA AC
Voltage Range	0.8...1.1 Un AC/DC
Maximum Switching Voltage	300 V AC UL 300 V AC CSA 250 V AC IEC
Motor Power HP	0.5 Hp 120 V AC 50/60 Hz 1 hp 277 V AC 50/60 Hz
Connections Terminals	Faston terminals
Mounting	Socket
Height	1.37 in (34.9 mm)
Width	1.60 in (40.6 mm)
Depth	1.07 in (27.3 mm)
Product Weight	2.82 oz (80 g)
Operating Time	20 ms operating 20 ms tripping

The information provided in this documentation contains general descriptions and/or technical characteristics of the performance of the products contained herein.
This documentation is not intended as a substitute for and is not to be used for determining suitability or reliability of these products for specific user applications.
It is the duty of any such user or integrator to perform the appropriate and complete risk analysis, evaluation and testing of the products with respect to the relevant specific application or use thereof.
Neither Schneider Electric Industries SAS nor any of its affiliates or subsidiaries shall be responsible or liable for misuse of the information contained herein.

Environment

Ambient Air Temperature for Operation	-40…131 °F (-40…55 °C)
Ambient Air Temperature for Storage	-40…185 °F (-40…85 °C)
Product Certifications	UL CE CSA
Electrical Durability	100000 cycles resistive
Mechanical Durability	10000000 cycles
Dielectric Strength	2000 V AC between coil and contact 2000 V AC between poles 1500 V AC between contacts
Shock Resistance	15 gn in operation
Vibration Resistance	+/- 1 mm 10…35 Hz) 3 gn 35…150 Hz)

Ordering and shipping details

Category	21127-ZELIO ICE CUBE RELAYS
Discount Schedule	CP2
GTIN	3606480781018
Returnability	No
Country of origin	CN

Packing Units

Unit Type of Package 1	PCE
Number of Units in Package 1	1
Package 1 Height	1.00 in (2.54 cm)
Package 1 Width	1.50 in (3.81 cm)
Package 1 Length	1.50 in (3.81 cm)
Package 1 Weight	2.40 oz (68.04 g)

Offer Sustainability

Sustainable offer status	Green Premium product
California proposition 65	WARNING: This product can expose you to chemicals including: Nickel compounds, which is known to the State of California to cause cancer, and Di-isodecyl phthalate (DIDP), which is known to the State of California to cause birth defects or other reproductive harm. For more information go to www.P65Warnings.ca.gov
REACh Regulation	REACh Declaration
REACh free of SVHC	Yes
EU RoHS Directive	Pro-active compliance (Product out of EU RoHS legal scope) EU RoHS Declaration
Toxic heavy metal free	Yes
Mercury free	Yes
China RoHS Regulation	China RoHS Declaration
RoHS exemption information	Yes
Environmental Disclosure	Product Environmental Profile
WEEE	The product must be disposed on European Union markets following specific waste collection and never end up in rubbish bins.

784XDXCL-120A

Approximate Dimensions

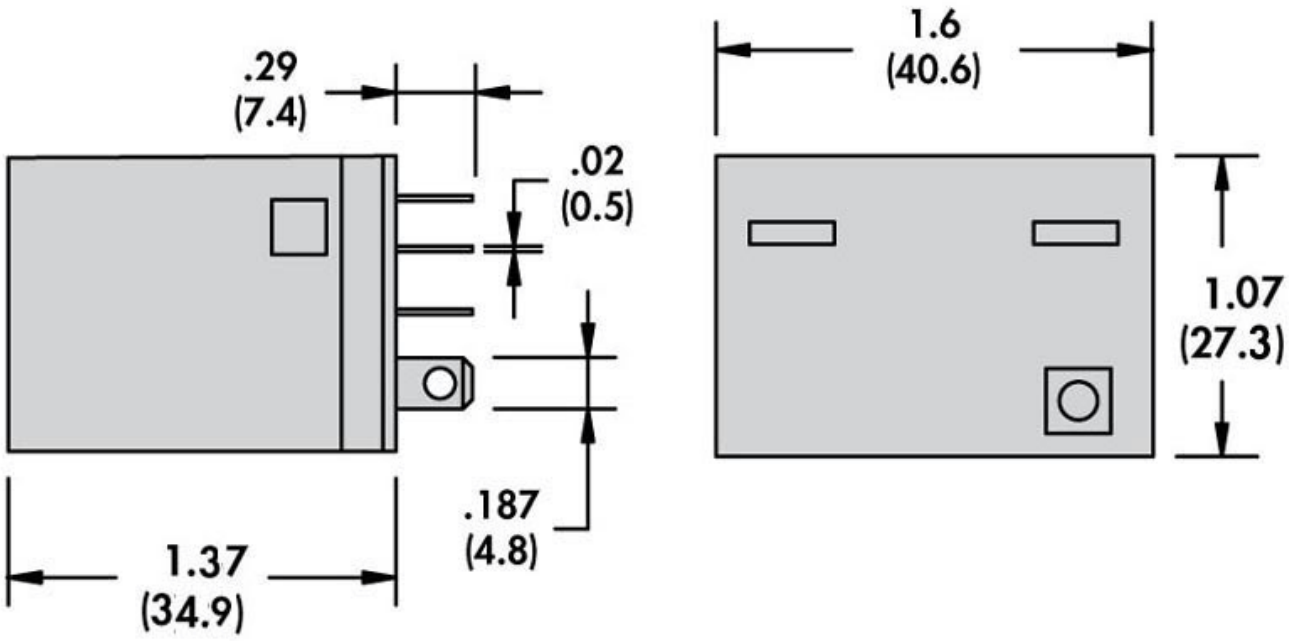
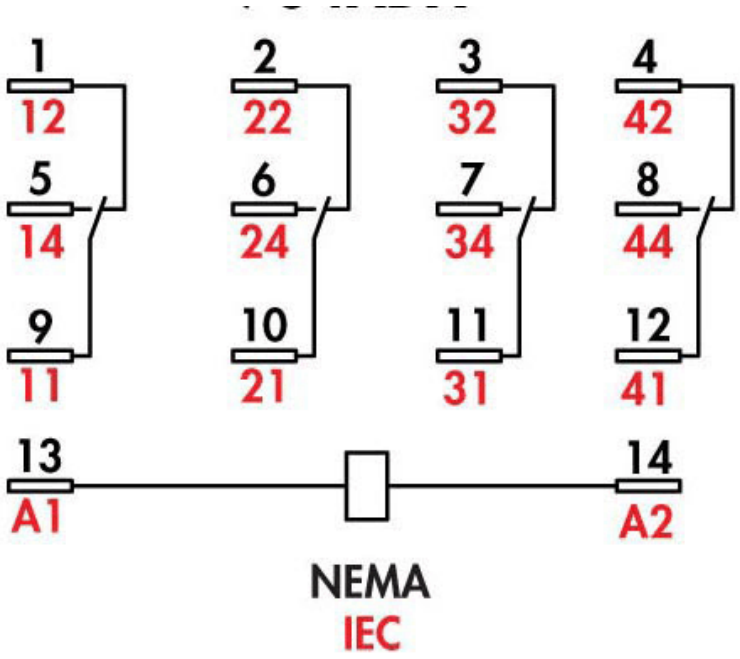
Connections and Wiring Diagrams