Product data sheet
Characteristics

750XBXRC-110D

General purpose relay, SE Relays, 750R, DPDT, 10A, 110 VDC, octal terminal 8 pins, clear cover

Main

Product Type	Plug-in electromechanical relay
Rated Line Current	10 A
Switch Function	DPDT
Contact Composition	2 NC + 2 NO

Complementary

Rated Operational Current	10 A at 277 V AC (on resistive load) conforming to UL 10 A at 30 V DC (on resistive load) conforming to UL 10 A at 250 V AC-1 (1 NO) (on resistive load) conforming to IEC 10 A at 28 V DC-1 (1 NO) (on resistive load) conforming to IEC 5 A at 250 V AC-1 (1 NC) (on resistive load) conforming to IEC 5 A at 28 V DC-1 (1 NC) (on resistive load) conforming to IEC
[Ue] rated operational voltage	110 V DC
Maximum Switching Voltage	300 V AC UL 30 V DC UL 250 V AC IEC 28 V DC IEC
Mounting Support	plug-in
Local Signalling	Flag Cover
Contacts Material	Silver alloy, gold flashed
Rated Power in HP	0.33 HP 120 V AC 1 HP 277 V AC
Connections Terminals	Octal terminal 8 pins)
Control Circuit Voltage Limits	0.8...1.1 Un DC
Resistance	7300 Ohm
Average Coil Consumption	1.4 W
Vibration Resistance	+/- 1 mm 10…35 Hz in operation 3 gn 35…150 Hz in operation
Operating Time	20 ms
Drop-out Voltage Threshold	>= 0.15 Uc AC >= 0.1 Uc DC
Minimum Switching Current	10 mA 17 V DC
Product Weight	2.93 oz (83 g)
Height	2.05 in (52 mm)
Width	1.38 in (35 mm)
Depth	1.40 in (35.5 mm)

The information provided in this documentation contains general descriptions and/or technical characteristics of the performance of the products contained herein.
This documentation is not intended as a substitute for and is not to be used for determining suitability or reliability of these products for specific user applications.
It is the duty of any such user or integrator to perform the appropriate and complete risk analysis, evaluation and testing of the products with respect to the relevant specific application or use thereof.
Neither Schneider Electric Industries SAS nor any of its affiliates or subsidiaries shall be responsible or liable for misuse of the information contained herein.

Environment

Shock Resistance	10 gn
Ambient Air Temperature for Operation	-40…131 °F (-40…55 °C)
Ambient Air Temperature for Storage	-40…185 °F (-40…85 °C)
Product Certifications	UL CSA CE EAC
Dielectric Strength	2500 V AC between coil and contact 2000 V AC between poles 1500 V AC between contacts
Electrical Durability	100000 cycles
Mechanical Durability	5000000 cycles
IP Degree of Protection	IP40

Ordering and shipping details

Category	21127-ZELIO ICE CUBE RELAYS
Discount Schedule	CP2
GTIN	3606480779213
Returnability	No
Country of origin	CN

Packing Units

Unit Type of Package 1	PCE
Number of Units in Package 1	1
Package 1 Height	1.41 in (3.57 cm)
Package 1 Width	1.38 in (3.5 cm)
Package 1 Length	2.09 in (5.3 cm)
Package 1 Weight	2.93 oz (83 g)

Offer Sustainability

Sustainable offer status	Green Premium product
California proposition 65	WARNING: This product can expose you to chemicals including: Nickel compounds, which is known to the State of California to cause cancer, and Di-isodecyl phthalate (DIDP), which is known to the State of California to cause birth defects or other reproductive harm. For more information go to www.P65Warnings.ca.gov
REACh Regulation	REACh Declaration
REACh free of SVHC	Yes
EU RoHS Directive	Pro-active compliance (Product out of EU RoHS legal scope) EU RoHS Declaration
Toxic heavy metal free	Yes
Mercury free	Yes
China RoHS Regulation	China RoHS Declaration
RoHS exemption information	Yes
Environmental Disclosure	Product Environmental Profile
WEEE	The product must be disposed on European Union markets following specific waste collection and never end up in rubbish bins.

750XBXRC-110D

Approximate Dimensions

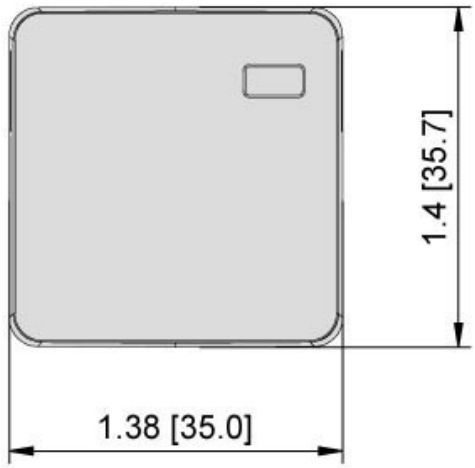

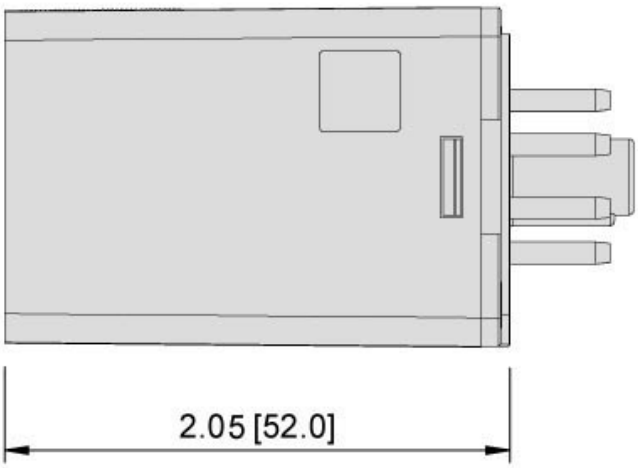

750XBXRC-110D
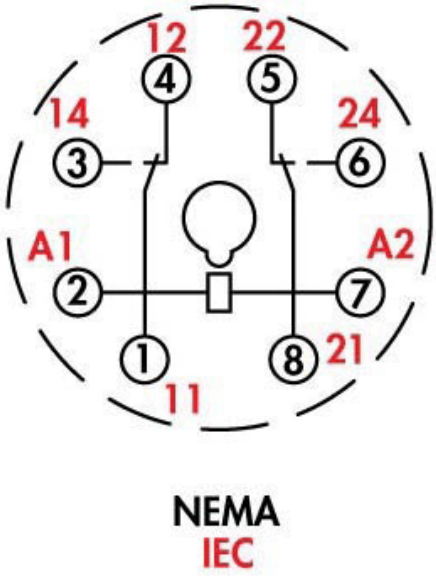
Connections and Wiring Diagrams