Electrical network protection

Sepam series 20

User's manual

06/2025

Schneider Electric

Safety instructions

Safety symbols and messages

Read these instructions carefully and look at the equipment to become familiar with the device before trying to install, operate, service or maintain it. The following special messages may appear throughout this bulletin or on the equipment to warn of potential hazards or to call attention to information that clarifies or simplifies a procedure.

ANSI symbol.

IEC symbol.

Risk of electric shock

The addition of either symbol to a Danger or Warning safety label indicates that an electrical hazard exists, which will result in personal injury if the instructions are not followed.

Safety alert

This is the safety alert symbol. It is used to alert you to potential personal injury hazards. Obey all safety messages that follow this symbol to avoid possible injury or death.

Safety messages

⚠ DANGER

DANGER indicates an imminently hazardous situation which, if not avoided, **will result in** death or serious injury.

⚠ WARNING

WARNING indicates a potentially hazardous situation which, if not avoided, **can result in** death or serious injury.

⚠ CAUTION

CAUTION indicates a potentially hazardous situation which, if not avoided, **can result in** minor or moderate injury.

NOTICE

NOTICE is used to address practices not related to physical injury.

Important notes

Restricted liability

Electrical equipment should be serviced and maintained only by qualified personnel. No responsibility is assumed by Schneider Electric for any consequences arising out of the use of this manual. This document is not intended as an instruction manual for untrained persons.

Device operation

The user is responsible for checking that the rated characteristics of the device are suitable for its application. The user is responsible for reading and following the device's operating and installation instructions before attempting to commission or maintain it. Failure to follow these instructions can affect device operation and constitute a hazard for people and property.

Protective grounding

The user is responsible for compliance with all the existing international and national electrical codes concerning protective grounding of any device.

General contents

Introduction 1

Metering functions 2

Protection functions 3

Control and monitoring functions 4

Modbus communication 5

Installation 6

Use 7

General contents

Introduction 7

Selection guide by application 8
Protection functions suitable for low voltage 10
Presentation 12
Selection table 13
Technical characteristics 14
Environmental characteristics 15

Metering functions 17

General settings 18
Characteristics 19
Phase current
Residual current 20
Average current and peak demand currents 21
Phase-to-phase voltage
Phase-to-neutral voltage 22
Residual voltage
Positive sequence voltage 23
Frequency
Temperature 24

Network diagnosis functions 25

Tripping current
Negative sequence / unbalance 25
Disturbance recording 26

Machine operation assistance functions 27

Running hours counter and operating time
Thermal capacity used 27
Operating time before tripping
Waiting time after tripping 28
Starting current and
starting / overload time 29
Number of starts before inhibition
Start inhibit time delay 30

Switchgear diagnosis functions 31

Cumulative breaking current and number of operations 31
Operating time
Charging time 32

General contents

Protection functions 33

Setting ranges 34
Phase-to-phase undervoltage 36
Positive sequence undervoltage and phase rotation direction check 37
Remanent undervoltage 38
Phase-to-neutral undervoltage 39
Phase undercurrent 40
Temperature monitoring 41
Negative sequence / unbalance 42
Excessive starting time, locked rotor 44
Thermal overload 45
Phase overcurrent 54
Phase overcurrent Cold Load Pick-Up/Blocking 56
Breaker failure 58
Earth fault 60
Earth fault Cold Load Pick-Up/Blocking 62
Phase-to-phase overvoltage 64
Neutral voltage displacement 65
Starts per hour 66
Recloser 67
Overfrequency 69
Underfrequency 70
Rate of change of frequency 71
General 72

Control and monitoring functions 79

Description 80
Definition of symbols 81
Assignment of logic inputs / outputs 82
Circuit breaker / contactor control 83
Logic discrimination 87
Disturbance recording triggering 89
Switching of groups of settings 90
Indications 91
Control matrix 93
Self-tests and fail-safe position 94

General contents

Modbus communication 101

Presentation 102
Modbus protocol 103
Configuring the communication interfaces 104
Commissioning and diagnosis 106
Data addresses and encoding 108
Time-tagging of events 117
Access to remote settings 122
Disturbance recording 132
Reading Sepam identification 134

Installation 135

Safety and Cyber-security instructions 136
Precautions 137
Equipment identification 138
Base unit 141
1 A/5 A current transformers 154
Voltage transformers 156
LPCT type current sensors 157
CSH120, CSH200, CSH300 Core balance CTs 160
CSH30 interposing ring CT 162
ACE990 Core balance CT interface 164
MES114 modules 166
Optional remote modules 169
MET148-2 Temperature sensor module 170
DSM303 Remote advanced UMI module 174
Communication accessory selection guide 176
Connection of communication interfaces 177
ACE949-2 2-wire RS 485 network interface 178
ACE959 4-wire RS 485 network interface 179
ACE937 fiber optic interface 180
ACE969TP-2 and ACE969FO-2 Multi-protocol interfaces 181
ACE909-2 RS 232/RS 485 converter 186
ACE919CA and ACE919CC RS 485/RS 485 converters 188
ECI850 IEC 61850 Sepam server 190

General contents

Use 195

User Machine Interfaces 196
SFT2841 setting and operating software 197
UMI on front panel 206
Advanced UMI 207
Default parameter setting 213

Commissioning 215

Commissioning: principles and method 215
Testing and metering equipment required 216
General examination and preliminary actions 217
Checking parameter and protection settings 218
Checking phase current input connections 219
Checking the residual current input connection 221
Checking phase voltage input connections 222
Checking the residual voltage input connection 223
Checking logic input and output connections 224
Validation of the complete protection chain 225
Checking optional module connections 226
Test sheet 227
Maintenance 228
Firmware modifications 230

Contents

Selection guide by application	**8**
Protection functions suitable for low voltage	**10**
Presentation	**12**
Selection table	**13**
Technical characteristics	**14**
Environmental characteristics	**15**

Selection guide by application

The selection guide by application suggests Sepam type(s) suitable for your protection requirements, based on your application characteristics. The most typical applications are presented along with the associated Sepam type.
Each application example is described:

- ■ By a single-line diagram specifying
  - □ the device to be protected
  - □ the network configuration
  - □ the position of the metering sensors
- ■ By the standard and specific Sepam functions to be implemented to protect the application concerned.

Series 20

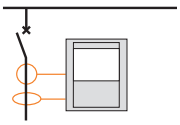

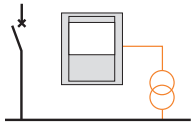

Series 40

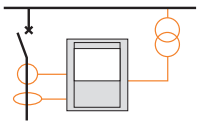

		Series 20				Series 40				
Protections										
	Current	■	■			■	■	■	■	■
	Voltage			■	■	■	■	■		■
	Frequency			■	■	■	■	■		■
	Specific		Breaker failure		Disconnection (ROCOF)		Directional earth fault	Directional earth fault and phase	Directional earth fault	
Applications										
Substation		S20	S24			S40 S50(4)	S41 S51(4)	S42 S52(4)	S43 S53(4)	S44 S54
Busbar				B21	B22					
Transformer		T20	T24			T40 T50(5)		T42 T52(5)		
Motor		M20				M40	M41			
Generator						G40				
Capacitor										
Characteristics										
Logic inputs/ outputs	Inputs	0 to 10		0 to 10		0 to 10				
	Outputs	4 to 8		4 to 8		4 to 8				
Temperature sensors		0 to 8		0 to 8		0 to 16				
Channel	Current	3I + I0		—		3I + I0				
	Voltage	—		3V + V0		3V				
	LPCT (1)	Yes		—		Yes				
Communication ports		1 to 2		1 to 2		1 to 2				
Control	Matrix (2)	Yes		Yes		Yes				
	Logic equation editor	—		—		Yes				
	Logipam (3)	—		—		—				
Other	Memory cartridge with settings	—		—		—				
	Backup battery	—		—		—				

(1) LPCT: Low-Power Current Transducer conforming to standard IEC 60044-8.
(2) Control matrix used for simple assignment of data from the protection, control and monitoring functions.
(3) Logipam: Ladder language PC programming environment for extended use of Sepam series 80 functions.
(4) S5X applications are identical to S4X applications with the following additional functions:
- *earth fault and phase overcurrent cold load pick-up*
- *broken conductor detection*
- *fault locator*

(5) T5X applications are identical to T4X applications with the following additional functions:
- *earth fault and phase overcurrent cold load pick-up*
- *broken conductor detection*

Selection guide by application

The list of protection functions is given for information only.
Direct earthing or impedance earthing have been represented by the same pictogram, i.e. by a direct earthing system.

Series 60

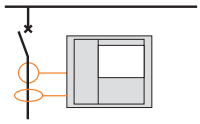

Series 80

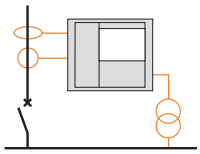

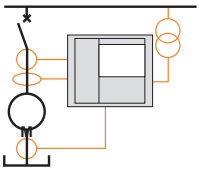

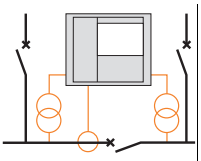

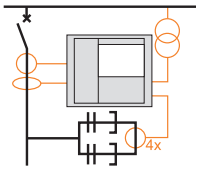

Series 60			Series 80							
■	■	■	■	■	■	■	■	■	■	■
■	■	■	■	■	■	■	■	■	■	■
■	■	■	■	■	■	■	■	■	■	■
	Direc-tional earth fault	Directional earth fault and phase		Directional earth fault	Directional earth fault and phase	Disconnect ion (ROCOF)	Transformer or machine-transformer unit differential	Machine differential	Busbar voltage and frequency protection	Capacitor bank unbalance
S60		S62	S80	S81	S82	S84				
			B80						B83	
T60		T62		T81	T82		T87			
	M61			M81			M88	M87		
G60		G62			G82		G88	G87		
C60										C86
0 to 28			0 to 42				0 to 42		0 to 42	0 to 42
4 to 16			5 to 23				5 to 23		5 to 23	5 to 23
0 to 16			0 to 16				0 to 16		0 to 16	0 to 16
3I + I0			3I + 2 x I0				2 x 3I + 2 x I0		3I + I0	2 x 3I + 2 x I0
3V, 2U + V0 or Vnt			3V + V0				3V + V0		2 x 3V + 2 x V0	3V + V0
Yes			Yes				Yes		Yes	Yes
1 to 2			2 to 4				2 to 4		2 to 4	2 to 4
Yes			Yes				Yes		Yes	Yes
Yes			Yes				Yes		Yes	Yes
–			Yes				Yes		Yes	Yes
Yes			Yes				Yes		Yes	Yes
Yes			Yes				Yes		Yes	Yes

All the information relating to the Sepam range can be found in the following documents:
- *Sepam catalog, reference SEPED303005EN*
- *Sepam series 20 user's manual, reference PCRED301005EN*
- *Sepam series 40 user's manual, reference PCRED301006EN*
- *Easergy Sepam series 60 user's manual, reference SEPED310017EN*
- *Easergy Sepam series 80 functions user's manual, reference SEPED303001EN*
- *Easergy Sepam series 80 Modbus communication user's manual, reference SEPED303002EN*
- *Easergy Sepam series 80 operation manual, reference SEPED303003EN*
- *Sepam DNP3 communication user's manual, reference SEPED305001EN*
- *Sepam IEC 60870-5-103 communication user's manual, reference SEPED305002EN*
- *Sepam IEC 61850 communication user's manual, reference SEPED306024EN*

Low voltage earthing systems

There are 4 low voltage (LV) earthing systems designated by a 2 or 3-letter acronym:

- TN-S
- TN-C
- TT
- IT

The letters making up the acronym have the following meanings:

Letter		Meaning
First letter		**Transformer neutral point**
	I	Earthed with an impedance
	T	Directly earthed
Second letter		**Electrical exposed conductive parts of the consumer**
	T	Earthed
	N	Connected to the neutral conductor
Third letter (optional)		**Protective Earth conductor**
	S	Separate N neutral conductor and PE Protective Earth conductor
	C	Combined N neutral conductor and PE Protective Earth conductor (PEN)

Protection functions suitable for low voltage

Compatibility of Sepam low voltage protection functions

Sepam protection functions can be used with low voltage (LV) as long as the conditions below are met:

- The distribution circuit must be rated higher than 32 A.
- The installation must comply with standard IEC 60364.

For additional information about the compatibility of Sepam protection functions with low voltage, please contact Schneider Electric technical support.

The table below lists the Sepam protection functions suitable for low voltage according to the earthing system used. Sepam protection functions not listed in this table are not suitable for low voltage. The protection functions listed in this table are available according to the Sepam type.

Protection	ANSI code	Earthing system				Comments
		TN-S	TN-C	TT	IT	
Phase overcurrent	50/51	■	■	■	■	Neutral conductor not protected
Earth fault/Sensitive earth fault	50N/51N	■	■	■	(1)	
Earth fault/Sensitive earth fault	50G/51G	■	■	■	(3)	
Negative sequence/unbalance	46	■	■	■	■	Threshold to be adapted to the phase unbalance
Thermal overload for cables/capacitor/ transformer/motor/generic	49RMS	■	■	■	■	Neutral conductor not protected
Restricted earth fault	64REF	■	■	■	(3)	
Two-winding transformer differential	87T	■	■	■	■	
Directional phase overcurrent	67	■	■	■ (4)	■ (4)	
Directional earth fault	67N/67NC					Incompatible with LV diagrams (4-wire)
Directional active overpower	32P	■	■	(2)	(2)	
Directional reactive overpower	32Q	■	■	(2)	(2)	
Undervoltage (L-L or L-N)	27	■	■	■	■	
Remanent undervoltage	27R	■	■	■	■	
Overvoltage (L-L or L-N)	59	■	■	■	■	
Neutral voltage displacement	59N	■	■	(4)	(4)	Residual voltage not available with 2 VTs
Negative sequence overvoltage	47	■	■	■	■	
Overfrequency	81H	■	■	■	■	
Underfrequency	81L	■	■	■	■	
Rate of change of frequency	81R	■	■	■	■	
Synchro-check	25	■	■	■	■	

■ *: Protection function suitable for low voltage (according to Sepam)*

(1) *Not recommended even on the second fault.*

(2) *2-wattmeter method not suitable for unbalanced loads.*

(3) *Residual current too low in IT.*

(4) *2 phase-to-phase VTs.*

Presentation

PE80226

Sepam: a modular solution.

The Sepam series 20 family of protection and metering units is designed for the operation of machines and electrical distribution networks of industrial installations and utility substations for all levels of voltage.
The Sepam series 20 family consists of simple, high-performing solutions, suited to demanding applications that call for current and voltage metering.

Sepam series 20 selection guide by application

Selection criteria	Series 20			
Metering	I	I	U	U
Specific protection functions		Breaker failure		Disconnection (ROCOF)
Applications				
Substation	S20	S24		
Transformer	T20	T24		
Motor	M20			
Busbar			B21	B22

PE80315

Sepam with basic UMI and with fixed advanced UMI.

Main functions

Protection

■ Overcurrent and earth fault protection with adjustable time reset and with switching from on setting group to the other controlled by a logic order
■ Earth fault protection insensitivity to transformer switching
■ Detection of phase unbalance
■ RMS thermal protection which takes into account external operating temperature and ventilation operating rates
■ Rate of change of frequency protection (ROCOF), for a fast and reliable disconnection.

Communication

Sepam can be connected to a supervision communication network (S-LAN) based on the following communication protocols:
■ Modbus RTU
■ DNP3
■ IEC 60870-5-103
■ IEC 61850
All the data needed for centralized equipment management from a remote monitoring and control system are available via the communication port:
■ reading: all measurements, alarms, protection settings,...
■ writing: breaking device remote control orders,...

Diagnosis

3 types of diagnosis data for improved operation:
■ network and machine diagnosis: tripping current, unbalance ratio, disturbance recording
■ switchgear diagnosis: cumulative breaking current, operating time
■ diagnosis of the protection unit and additional modules: continuous self-testing, watchdog.

Control and monitoring

Circuit breaker program logic ready to use, requiring no auxiliary relays or additional wiring.

PE50593

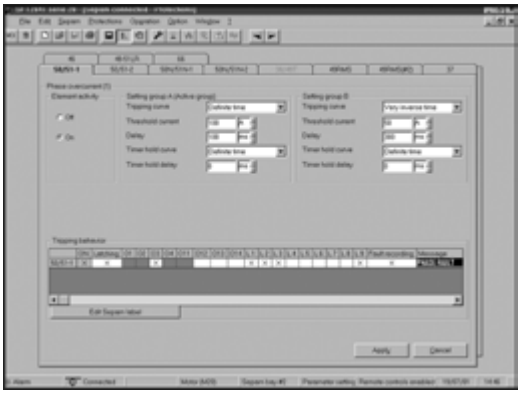

Example of an SFT2841 software screen.

User Machine Interface

2 levels of User Machine Interface (UMI) are available according to the user's needs:
■ **basic UMI:**
an economical solution for installations that do not require local operation (run via a remote monitoring and control system)
■ **fixed or remote advanced UMI:**
a graphic LCD display and 9-key keypad are used to display the measurement and diagnosis values, alarm and operating messages and provide access to protection and parameter setting values, for installations that are operated locally.

Setting and operating software

The **SFT2841** PC software tool gives access to all the Sepam functions, with all the facilities and convenience provided by a Windows type environment.

Selection table

		Substation		Transformer		Motor	Busbar	
Protections	**ANSI code**	**S20**	**S24(4)**	**T20**	**T24(4)**	**M20**	**B21 (3)**	**B22**
Phase overcurrent	50/51	4	4	4	4	4		
Phase Overcurrent Cold Load Pick-Up	CLPU 50/51		1		1			
Earth fault, sensitive earth fault	50N/51N 50G/51G	4	4	4	4	4		
Earth Fault Cold Load Pick-Up	CLPU 50N/51N		1		1			
Breaker failure	50BF		1		1			
Negative sequence/unbalance	46	1	1	1	1	1		
Thermal overload	49RMS			2	2	2		
Phase undercurrent	37					1		
Locked rotor, excessive starting time	48/51LR/14					1		
Starts per hour	66					1		
Positive sequence undervoltage	27D/47						2	2
Remanent undervoltage	27R						1	1
Phase-to-phase undervoltage	27						2	2
Phase-to-neutral undervoltage	27S						1	1
Phase-to-phase overvoltage	59						2	2
Neutral voltage displacement	59N						2	2
Overfrequency	81H						1	1
Underfrequency	81L						2	2
Rate of change of frequency	81R							1
Recloser (4 cycles)	79	□	□					
Thermostat/Buchholz	26/63			□	□			
Temperature monitoring (8 sensors, 2 set points per sensor)	38/49T			□	□	□		
Metering								
Phase current I1, I2, I3 RMS, residual current I0		■	■	■	■	■		
Demand current I1, I2, I3, peak demand current IM1, IM2, IM3		■	■	■	■	■		
Voltage U21, U32, U13, V1, V2, V3, residual voltage V0							■	■
Positive sequence voltage Vd/rotation direction							■	■
Frequency							■	■
Temperature				□	□	□		
Network and machine diagnosis								
Tripping current TripI1, TripI2, TripI3, TripI0		■	■	■	■	■		
Unbalance ratio/negative-sequence current Ii		■	■	■	■	■		
Disturbance recording		■	■	■	■	■	■	■
Thermal capacity used				■	■	■		
Remaining operating time before overload tripping				■	■	■		
Waiting time after overload tripping				■	■	■		
Running hours counter/operating time				■	■	■		
Starting current and time						■		
Start inhibit time, number of starts before inhibition						■		
Switchgear diagnosis								
Cumulative breaking current		■	■	■	■	■		
Trip circuit supervision		□	□	□	□	□	□	□
Number of operations, operating time, charging time		□	□	□	□	□		
Control and monitoring	**ANSI code**							
Circuit breaker/contactor control (1)	94/69	□	□	□	□	□	□	□
Latching/acknowledgment	86	■	■	■	■	■	■	■
Logic discrimination	68	□	□	□	□	□		
Switching of groups of settings		■ (2)	■ (2)	■ (2)	■ (2)	■ (2)		
Inhibition of protection 50N/51N by an input			□					
Annunciation	30	■	■	■	■	■	■	■
Additional modules								
8 temperature sensor inputs - MET148-2 module				□	□	□		
1 low level analog output - MSA141 module		□	□	□	□	□	□	□
Logic inputs/outputs - MES114/MES114E/MES114F module (10I/4O)		□	□	□	□	□	□	□
Communication interface - ACE949-2, ACE959, ACE937, ACE969TP-2 or ACE969FO-2		□	□	□	□	□	□	□

■ Standard, □ according to parameter setting and MES114/MES114E/MES114F or MET148-2 input/output module options

(1) *For shunt trip unit or undervoltage trip unit*

(2) *Exclusive choice between logic discrimination and switching from one 2-relay group of settings to another 2-relay group*

(3) *Performs Sepam B20 functions*

(4) *Applications S24 and T24 perform the functions of applications S23 and T23 respectively and, in addition, the phase overcurrent and earth fault cold load pick-up functions.*

Technical characteristics

Weight

Minimum weight (Sepam with basic UMI and without MES114)	1.2 kg (2.6 lb)
Maximum weight (Sepam with advanced UMI and MES114)	1.7 kg (3.7 lb)

Analog inputs

Current transformer 1 A or 5 A CT (with CCA630 or CCA634) 1 A to 6250 A ratings	Input impedance	< 0.02 Ω
	Consumption	< 0.02 VA at 1 A < 0.5 VA at 5 A
	Rated thermal withstand	4 In
	1-second overload	100 In (500 A)
Voltage transformer 220 V to 250 kV ratings	Input impedance	> 100 kΩ
	Input voltage	100 to 230/√3 V
	Rated thermal withstand	240 V
	1-second overload	480 V

Temperature sensor input (MET148-2 module)

Type of sensor	Pt 100	Ni 100/120
Isolation from earth	None	None
Current injected in sensor	4 mA	4 mA
Maximum distance between sensor and module	1 km (0.62 mi)	

Logic inputs

		MES114	MES114E		MES114F	
Voltage		24 to 250 V DC	110 to 125 V DC	110 V AC	220 to 250 V DC	220 to 240 V AC
Range		19.2 to 275 V DC	88 to 150 V DC	88 to 132 V AC	176 to 275 V DC	176 to 264 V AC
Frequency		-	-	47 to 63 Hz	-	47 to 63 Hz
Typical consumption		3 mA	3 mA	3 mA	3 mA	3 mA
Typical switching threshold		14 V DC	82 V DC	58 V AC	154 V DC	120 V AC
Input limit voltage	At state 1	⩾ 19 V DC	⩾ 88 V DC	⩾ 88 V AC	⩾ 176 V DC	⩾ 176 V AC
	At state 0	⩽ 6 V DC	⩽ 75 V DC	⩽ 22 V AC	⩽ 137 V DC	⩽ 48 V AC
Isolation of inputs in relation to other isolated groups		Enhanced	Enhanced	Enhanced	Enhanced	Enhanced

Relay outputs

Control relay outputs (O1, O2, O3, O11 contacts) (1)

Voltage	DC	24/48 V DC	127 V DC	220 V DC	250 V DC	-
	AC (47.5 to 63 Hz)	-	-	-	-	100 to 240 V AC
Continuous current		8 A	8 A	8 A	8 A	8 A
Breaking capacity	Resistive load	8 A / 4 A	0.7 A	0.3 A	0.2 A	-
	L/R load < 20	6 A / 2 A	0.5 A	0.2 A	-	-
	L/R load < 40 ms	4 A / 1 A	0.2 A	0.1 A	-	-
	Resistive load	-	-	-	-	8 A
	p.f. load > 0.3	-	-	-	-	5 A
Making capacity		< 15 A for 200 ms				
Isolation of outputs from other isolated groups		Enhanced				

Annunciation relay output (O4, O12, O13, O14 contacts)

Voltage	DC	24/48 V DC	127 V DC	220 V DC	250 V DC	-
	AC (47.5 to 63 Hz)	-	-	-	-	100 to 240 V AC
Continuous current		2 A	2 A	2 A	2 A	2 A
Breaking capacity	Resistive load	2 A / 1 A	0.6 A	0.3 A	0.2 A	-
	L/R load < 20 ms	2 A / 1 A	0.5 A	0.15 A	-	-
	p.f. load > 0.3	-	-	-	-	1 A
Isolation of outputs from other isolated groups		Enhanced				

Power supply

Voltage	24/250 V DC	110/240 V AC
Range	-20% +10%	-20% +10% (47.5 to 63 Hz)
Deactivated consumption (2)	< 4.5 W	< 9 VA
Maximum consumption (2)	< 8 W	< 15 VA
Inrush current	< 10 A for 10 ms < 28 A for 100 µs	< 15 A for first half-period
Acceptable ripple content	12 %	-
Acceptable momentary outages	10 ms	10 ms

Analog output (MSA141 module)

Current	4 - 20 mA, 0 - 20 mA, 0 - 10 mA, 0 - 1 mA
Load impedance	< 600 Ω (including wiring)
Accuracy	0.50% full scale or 0.01 mA

(1) *Relay outputs (O1, O2, O11 contact) comply with clause 6.7 of standard C37.90, (30 A, 200 ms, 2000 operations)*
(2) *According to configuration.*

Environmental characteristics

Electromagnetic compatibility	Standard	Level / Class	Value
Emission tests			
Disturbing field emission	CISPR 22		
	EN 55022	A	
Conducted disturbance emission	CISPR 22		
	EN 55022	B	
Immunity tests — Radiated disturbances			
Immunity to radiated fields			
	IEC 61000-4-3	III	10 V/m ; 80 MHz - 2 GHz
	ANSI C37.90.2		20 V/m ; 80 MHz - 1 GHz
Electrostatic discharge	IEC 61000-4-2		8 kV air ; 6 kV contact
	ANSI C37.90.3		8 kV air ; 4 kV contact
Immunity to magnetic fields at network frequency	IEC 61000-4-8	IV	30 A/m (continuous) - 300 A/m (13 s)
Immunity tests — Conducted disturbances			
Immunity to conducted RF disturbances	IEC 60000-4-6		10 V
Immunity to conducted disturbances in common mode from 0 Hz to 150 kHz	IEC 61000-4-16	III	
Fast transient bursts			
	IEC 61000-4-4	IV	4 kV ; 5 kHz and 100 kHz
1 MHz damped oscillating wave			
	ANSI C37.90.1		2.5 kV MC and MD
100 kHz damped oscillating wave	IEC 61000-4-12		2 kV MC
Slow damped oscillating wave (10 kHz to 100 Mhz)	IEC 61000-4-18	III	
Surges	IEC 61000-4-5		2 kV MC ; 1 kV MD
Voltage interruptions	IEC 60255-11		100% 10ms

Mechanical robustness	Standard	Level / Class	Value
In operation			
Vibrations	IEC 60255-21-1	2	1 Gn ; 10 Hz - 150 Hz
	IEC 60068-2-6	Fc	3 Hz - 13.2 Hz ; a = ±1 mm (±0.039 in)
	IEC 60068-2-64	2M1	
Shocks	IEC 60255-21-2	2	10 Gn / 11 ms
Earthquakes	IEC 60255-21-3	2	2 Gn (horizontal axes)
			1 Gn (vertical axes)
De-energized			
Vibrations	IEC 60255-21-1	2	2 Gn ; 10 Hz - 150 Hz
Shocks	IEC 60255-21-2	2	30 Gn / 11 ms
Jolts	IEC 60255-21-2	2	20 Gn / 16 ms

CSH30 horizontal with 2 clips; CSH120 / CSH200 horizontal with 3 plastic cable ties

Mechanical robustness	Standard	Level / Class	Value
Operating (Energized)			
Vibrations	IEC 60255-21-1	2	0.075mm / 1g; 10 – 150Hz
Shocks	IEC 60255-21-2	2	10g / 11ms
Earthquakes	IEC 60255-21-3	2	7.5mm / 2g (H); 3.5mm / 1g (V); 3 – 35Hz
No Operating (De-energized)			
Vibrations	IEC 60255-21-1	2	2g; 10 – 150Hz
Shocks	IEC 60255-21-2	2	30g / 11ms
Jolts	IEC 60255-21-2	2	20g / 16ms

CSH30 vertical with 1 clip; CSH120 vertical with 2 clips; CSH300 horizontal with 3 plastic cable ties

Mechanical robustness	Standard	Level / Class	Value
Operating (Energized)			
Vibrations	IEC 60255-21-1	1	0.035mm / 0.5g; 10 – 150 Hz
Shocks	IEC 60255-21-2	1	5g / 11ms
Earthquakes	IEC 60255-21-3	1	3.5mm / 1g (H); 1.5mm / 0.5g (V); 3 – 35Hz
No Operating (De-energized)			
Vibrations	IEC 60255-21-1	1	1g; 10 – 150Hz
Shocks	IEC 60255-21-2	1	15g / 11ms
Jolts	IEC 60255-21-2	1	10g / 16ms

Environmental characteristics

Climatic withstand	Standard	Level/Class	Value
During operation			
Exposure to cold	IEC 60068-2-1	Ad	-25°C (-13°F)
Exposure to dry heat	IEC 60068-2-2	Bd	+70°C (+158°F)
Continuous exposure to damp heat	IEC 60068-2-78	Cab	10 days; 93% RH; 40°C (104°F)
Salt mist	IEC 60068-2-52	Kb/2	3 days
Influence of corrosion/2-gas test	IEC 60068-2-60	Method 1	21 days; 75% RH; 25°C (77°F); 0.1 ppm H_2S; 0.5 ppm SO_2
Influence of corrosion/4-gas test	IEC 60068-2-60	Method 4	21 days; 70% RH; 25°C (77°F); 0.01 ppm H_2S; 0.2 ppm SO_2; 0.2 ppm NO_2; 0.01 ppm Cl_2
	EIA 364-65A	IIIA	42 days ; 75% RH ; 30 °C (86 °F) ; 0.1 ppm H_2S ; 0.2 ppm SO_2 ; 0.2 ppm NO_2 ; 0.02 ppm Cl_2
In storage (1)			
Temperature variation with specified variation rate	IEC 60068-2-14	Nb	-25°C to +70°C (-13°F to +158°F) 5°C/min
Exposure to cold	IEC 60068-2-1	Ab	-25°C (-13°F)
Exposure to dry heat	IEC 60068-2-2	Bb	+70°C (+158°F)
Continuous exposure to damp heat	IEC 60068-2-78	Cab	56 days; 93% RH; 40°C (104°F)
	IEC 60068-2-30	Db	6 days; 95% RH; 55°C (131°F)

Safety	Standard	Level/Class	Value
Enclosure safety tests			
Front panel tightness	IEC 60529	IP52	Other panels IP20
	NEMA	Type 12	
Resistance to mechanical stress	IEC 60255-27	IK07	2J
Fire withstand	IEC 60695-2-11		650°C (1200°F) with glow wire
Electrical safety tests			
1.2/50 µs impulse wave	IEC 60255-27		5 kV (2)
Power frequency dielectric withstand	IEC 60255-27		2 kV 1min (3)
	ANSI C37.90		1 kV 1 min (annunciation output) 1.5 kV 1 min (control output)

Certification

CE	**Norme harmonisée** : ■ EN/IEC 60255-26 :2013 ■ EN 60255-27: 2014/IEC 60255-27:2013 ■ EN IEC 63000:2018 / IEC 63000:2016	**Directives européennes :** ■ EMC European Directive CEM 2014/30/EU ■ Low Voltage European Directive 2014/35/EU ■ RoHS directive 2011/65/EU amended by Directive (EU) 2015/863
UK CA	**BS-designated standards :** ■ BS EN 60255-26 :2013 ■ BS EN 60255-27: 2013 ■ BS EN IEC 63000:2018	**UK regulations (Statutory Instruments):** ■ SI 2016 No. 1101 ■ SI 2016 No. 1091 ■ SI 2012 No. 3032
UL	UL508-CSA C22.2 no. 14-95	File E212533
CSA	CSA C22.2 no. 14-95/no. 0.17-00	File 210625

***(1)** Sepam must be stored in its original packaging.*
***(2)** Except for communication: 3 kV in common mode and 1 kV in differential mode.*
***(3)** Except for communication: 1 kVrms.*
***(4)** See the appendix in "Installation and operation" manual SEPED303003EN, "Functional Safety" section*

Contents

General settings 18

Characteristics 19

Phase current
Residual current 20

Average current and peak demand currents 21

Phase-to-phase voltage
Phase-to-neutral voltage 22

Residual voltage
Positive sequence voltage 23

Frequency
Temperature 24

Tripping current
Negative sequence / unbalance 25

Disturbance recording 26

Running hours counter and operating time
Thermal capacity used 27

Operating time before tripping
Waiting time after tripping 28

Starting current and starting / overload time 29

Number of starts before inhibition
Start inhibit time delay 30

Cumulative breaking current and number of operations 31

Operating time
Charging time 32

General settings

The general settings define the characteristics of the measurement sensors connected to Sepam and determine the performance of the metering and protection functions used. They are accessed via the SFT2841 setting software General Characteristics tab.

Nota : *You must use an interface ACE990 with a core balance CT other than a CSH120, a CSH200 or a CSH300, even if this core balance CT has the same transformation ratio than a CSH120, CSH200 or a CSH300.*

General settings		Selection	Setting range
In	Rated phase current (sensor primary current)	2 or 3 CT 1 A / 5 A	1 A to 6250 A
		3 LPCTs	25 A to 3150 A (1)
Ib	Base current, according to rated power of equipment (2)		0.2 In to 1.3 In
In0	Rated residual current	Sum of 3 phase currents	See In rated phase current
		CSH120, CSH200, CSH300 core balance CT	2A, 5 A or 20 A rating
		1 A/5 A CT	1 A to 6250 A (In0 = In)
		1 A/5 A CT Sensitivity x 10	0.1 A to 625 A (In0 = In/10)
		ACE990 + core balance CT other than CSH120, CSH200 or CSH300 the core balance CT ratio 1/n must be such that 50 ⩽ n ⩽ 1500)	According to current monitored and use of ACE990
Unp	Rated primary phase-to-phase voltage (Vnp: rated primary phase-to-neutral voltage Vnp = Unp/$\sqrt{3}$)		220 V to 250 kV
Uns	Rated secondary phase-to-phase voltage	3 VTs: V1, V2, V3	90 V to 230 V in steps of 1 V
		2 VTs: U21, U32	90 V to 120 V in steps of 1 V
		1 VT: V1	90 V to 120 V in steps of 1 V
Uns0	Secondary zero sequence voltage for primary zero sequence voltage Unp/$\sqrt{3}$		Uns/3 or Uns/$\sqrt{3}$
	Rated frequency		50 Hz or 60 Hz
	Integration period (for demand current and peak demand current and power)		5, 10, 15, 30, 60 mn
	Pulse-type accumulated energy meter	Increments active energy	0.1 kW.h to 5 MW.h
		Increments reactive energy	0.1 kvar.h to 5 Mvar.h

(1) *In values for LPCT, in Amps: 25, 50, 100, 125, 133, 200, 250, 320, 400, 500, 630, 666, 1000, 1600, 2000, 3150.*

(2) *Even if the value is within the range, it has to be rounded according to the setting step of 1 or 10A (i.e.: Ib = 12.2A➔13A).*

Functions		Measurement range	Accuracy (1)	MSA141	Saving
Metering					
Phase current		0.1 to 40 In (2)	±1 %	■	
Residual current	Calculated	0.1 to 40 In	±1 %	■	
	Measured	0.1 to 20 In0	±1 %	■	
Demand current		0.1 to 40 In	±1 %		
Peak demand current		0.1 to 40 In	±1 %		□
Phase-to-phase voltage		0.05 to 1.2 Unp	±1 %	■	
Phase-to-neutral voltage		0.05 to 1.2 Vnp	±1 %	■	
Residual voltage		0.015 to 3 Vnp	±1 %		
Positive sequence voltage		0.05 to 1.2 Vnp	±5 %		
Frequency Sepam series 20		50 ±5 Hz or 60 ±5 Hz	±0.05 Hz	■	
Temperature		-30 to +200 °C or -22 to +392 °F	±1 °C from +20 to +140 °C	■	
Network diagnosis assistance					
Phase tripping current		0.1 to 40 In	±5 %		□
Earth fault tripping current		0.1 to 20 In0	±5 %		□
Negative sequence / unbalance		10 to 500 % of Ib	±2 %		
Disturbance recording					
Machine operating assistance					
Thermal capacity used		0 to 800 % (100 % for I phase = Ib)	±1 %	■	□
Remaining operating time before overload tripping		0 to 999 mn	±1 mn		
Waiting time after overload tripping		0 to 999 mn	±1 mn		
Running hours counter / operating time		0 to 65535 hours	±1 % or ±0.5 h		□
Starting current		0.5 Ib to 24 In	±5 %		□
Starting time		0 to 300 s	±300 ms		□
Number of starts before inhibition		0 to 60	1		
Start inhibit time		0 to 360 mn	±1 mn		
Switchgear diagnosis assistance					
Cumulative breaking current		0 to 65535 kA²	±10 %		□
Number of operations		0 to 4.10^9	1		□
Operating time		20 to 100 ms	±1 ms		□
Charging time		1 to 20 s	±0.5 s		□

■ *available on MSA141 analog output module, according to setup.*
□ *saved in the event of auxiliary supply outage.*
(1) *Typical accuracy, see details on subsequent pages.*
(2) *Measurement up to 0.02 In for information purpose.*

Phase current
Residual current

Phase current

Operation

This function gives the RMS value of the phase currents:
- I1: phase 1 current
- I2: phase 2 current
- I3: phase 3 current.

It is based on RMS current measurement and takes into account harmonics up to number 17.

Readout

The measurements may be accessed via:
- the display of a Sepam with advanced UMI by pressing the key
- the display of a PC with the SFT2841 software
- the communication link
- an analog converter with the MSA141 option.

Characteristics

Measurement range	0.1 to 1.5 In (1)
Unit	A or kA
Accuracy	typically ±1 % (2) ±2 % from 0.3 to 1.5 In ±5 % if < 0.3 In
Display format (3)	3 significant digits
Resolution	0.1 A or 1 digit
Refresh interval	1 second (typical)

(1) *In rated current set in the general settings.*
(2) *At In, in reference conditions (IEC 60255-6).*
(3) *Display of values: 0.02 to 40 In.*

Residual current

Operation

This operation gives the RMS value of the residual current I0.
It is based on measurement of the fundamental component.

Readout

The measurements may be accessed via:
- the display of a Sepam with advanced UMI by pressing the key
- the display of a PC with the SFT2841 software
- the communication link
- an analog converter with the MSA141 option.

Characteristics

Measurement range		
Connection to 3 phase CT:		0.1 to 1.5 In0 (1)
Connection to 1 CT		0.1 to 1.5 In0 (1)
Connection to core balance CT with ACE990		0.1 to 1.5 In0 (1)
Connection to CSH residual current sensor	2 A rating	0.2 to 3 A
	20 A rating	2 to 30 A
Unit		A or kA
Accuracy (2)		typically ±1 % at In0 ±2 % from 0.3 to 1.5 In0 ±5 % if < 0.3 In0
Display format		3 significant digits
Resolution		0.1 A or 1 digit

(1) *In0 rated current set in the general settings.*
(2) *in reference conditions (IEC 60255-6), excluding sensor accuracy.*

Average current and peak demand currents

Operation

This function gives:
- the average RMS current for each phase that has been obtained for each integration interval
- the greatest average RMS current value for each phase that has been obtained since the last reset.

The values are refreshed after each "integration interval", an interval that may be set from 5 to 60 mn.

Readout

The measurements may be accessed via:
- the display of a Sepam with advanced UMI by pressing the key
- the display of a PC with the SFT2841 software
- the communication link.

Resetting to zero:
- press the clear key on the display when a peak demand current is displayed
- via the clear command in the SFT2841 software
- via the communication link (remote control order TC6).

Characteristics

Measurement range	0.1 to 1.5 In (1)
Unit	A or kA
Accuracy	typically ±1 % (2) ±2 % from 0.3 to 1.5 In ±5 % if < 0.3 In
Display format (3)	3 significant digits
Resolution	0.1 A or 1 digit
Integration interval	5, 10, 15, 30, 60 minutes

(1) *In rated current set in the general settings.*
(2) *at In, in reference conditions (IEC 60255-6).*
(3) *Display of values: 0.02 to 40 In.*

TS/TC equivalence for each protocol

Modbus	DNP3	IEC 60870-5-103	IEC 61850
TC	**Binary Output**	**ASDU, FUN, INF**	**LN.DO.DA**
TC6	BO12	-	MSTA.RsMax.ctlVal

Phase-to-phase voltage
Phase-to-neutral voltage

Phase-to-phase voltage

Operation

This function gives the RMS value of the 50 or 60 Hz component of phase-to-phase voltages (according to voltage sensor connections):

- U21: voltage between phases 2 and 1
- U32: voltage between phases 3 and 2
- U13: voltage between phases 1 and 3.

It is based on measurement of the fundamental component.

Readout

The measurements may be accessed via:

- the display of a Sepam with advanced UMI by pressing the key
- the display of a PC with the SFT2841 software
- the communication link
- an analog converter with the MSA141 option.

Characteristics

Measurement range	0.05 to 1.2 Unp (1)
Unit	V or kV
Accuracy (2)	±1 % from 0.5 to 1.2 Unp ±2 % from 0,05 to 0.5 Unp
Display format	3 significant digits
Resolution	1 V or 1 digit
Refresh interval	1 second (typical)

(1) *Un nominal rating set in the general settings.*
(2) *at Un, in reference conditions (IEC 60255-6).*

Phase-to-neutral voltage

Operation

This function gives the RMS value of the 50 or 60 Hz component of phase-to-neutral voltages:

- V1: phase 1 phase-to-neutral voltage
- V2: phase 2 phase-to-neutral voltage
- V3: phase 3 phase-to-neutral voltage.

It is based on measurement of the fundamental component.

Readout

The measurements may be accessed via:

- the display of a Sepam with advanced UMI by pressing the key
- the display of a PC with the SFT2841 software
- the communication link
- an analog converter with the MSA141 option.

Characteristics

Measurement range	0.05 to 1.2 Vnp (1)
Unit	V or kV
Accuracy (2)	±1 % from 0.5 to 1.2 Vnp ±2 % from 0.05 to 0.5 Vnp
Display format	3 significant digits
Resolution	1 V or 1 digit
Refresh interval	1 second (typical)

(1) *Vnp: primary rated phase-to-neutral voltage (Vnp = Unp/√3).*
(2) *at Vnp in reference conditions (IEC 60255-6).*

Residual voltage
Positive sequence voltage

Residual voltage

Operation

This function gives the value of the residual voltage V0 = (V1 + V2 + V3).
V0 is measured:
- by taking the internal sum of the 3 phase voltages
- by an open star / delta VT.

It is based on measurement of the fundamental component.

Readout

The measurement may be accessed via:
- the display of a Sepam with advanced UMI by pressing the key
- the display of a PC with the SFT2841 software
- the communication link.

Characteristics

Measurement range	0.015 Vnp to 3 Vnp (1)
Unit	V or kV
Accuracy	±1 % from 0.5 to 3 Vnp ±2 % from 0.05 to 0.5 Vnp ±5 % from 0.015 to 0.05 Vnp
Display format	3 significant digits
Resolution	1 V or 1 digit
Refresh interval	1 second (typical)

(1) *Vnp: primary rated phase-to-neutral voltage (Vnp = Unp/√3).*

Positive sequence voltage

Operation

This function gives the calculated value of the positive sequence voltage Vd.

Readout

The measurement may be accessed via:
- the display of a Sepam with advanced UMI by pressing the key
- the display of a PC with the SFT2841 software
- the communication link.

Characteristics

Measurement range	0.05 to 1.2 Vnp (1)
Unit	V or kV
Accuracy	±2 % at Vnp
Display format	3 significant digits
Resolution	1 V or 1 digit
Refresh interval	1 second (typical)

(1) *Vnp: primary rated phase-to-neutral voltage (Vnp = Unp/√3).*

Frequency
Temperature

Frequency

Operation

This function gives the frequency value.
Frequency is measured via the following:
- based on U21, if only one phase-to-phase voltage is connected to the Sepam
- based on positive sequence voltage, if the Sepam includes U21 and U32 measurements.

Frequency is not measured if:
- the voltage U21 or positive sequence voltage Vd is less than 40 % of Un
- the frequency is outside the measurement range.

Readout

The measurement may be accessed via:
- the display of a Sepam with advanced UMI by pressing the key
- the display of a PC with the SFT2841 software
- the communication link
- an analog converter with the MSA141 option.

Characteristics

Rated frequency		50 Hz, 60 Hz
Range	50 Hz	45 Hz to 55 Hz
	60 Hz	55 Hz to 65 Hz
Accuracy (1)		±0.05 Hz
Display format		3 significant digits
Resolution		0.01 Hz or 1 digit
Refresh interval		1 second (typical)

(1) *At Un in reference conditions (IEC 60255-6).*

Temperature

Operation

This function gives the temperature value measured by resistance temperature detectors (RTDs):
- platinum Pt100 (100 Ω at 0 °C or 32 °F) in accordance with the IEC 60751 and DIN 43760 standards
- nickel 100 Ω or 120 Ω (at 0 °C or 32 °F).

Each RTD channel gives one measurement:
- tx = RTD x temperature.

The function also indicates RTD faults:
- RTD disconnected (tx > 205 °C or 401 °F)
- RTD shorted (tx < -35 °C or -31 °F).

In the event of a fault, display of the value is inhibited.
The associated monitoring function generates a maintenance alarm.

Readout

The measurement may be accessed via:
- the display of a Sepam with advanced UMI by pressing the key
- the display of a PC with the SFT2841 software
- the communication link
- an analog converter with the MSA141 option.

Characteristics

Range	-30 °C to +200 °C or -22 °F to +392 °F
Accuracy	±2 °C ±1 °C from +20 to +140 °C
Resolution	1 °C or 1 °F
Refresh interval	5 seconds (typical)

Accuracy derating according to wiring: see chapter "installation of MET148-2 module" page 170.

Tripping current
Negative sequence / unbalance

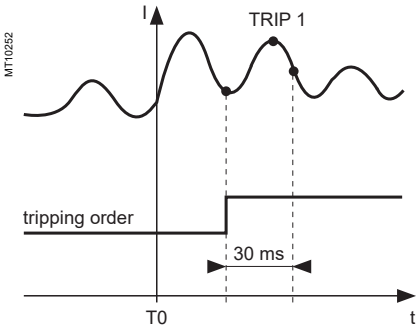

Tripping current

Operation

This function gives the RMS value of currents at the prospective time of the last trip:
- TRIP1: phase 1 current
- TRIP2: phase 2 current
- TRIP3: phase 3 current
- TRIPI0: residual current.

It is based on measurement of the fundamental component.
This measurement is defined as the maximum RMS value measured during a 30 ms interval after the activation of the tripping contact on output O1.
The tripping currents are not saved in the event of a power failure.

Readout

The measurements may be accessed via:
- the display of a Sepam with advanced UMI by pressing the key
- the display of a PC with the SFT2841 software
- the communication link.

Characteristics

Measurement range	phase current 0.1 to 40 In (1)
Residual current	0.1 to 20 In0 (1)
Unit	A or kA
Accuracy	±5 % ±1 digit
Display format	3 significant digits
Resolution	0.1 A or 1 digit

***(1)** In/In0 rated current set in the general settings.*

Negative sequence / unbalance

Operation

This function gives the negative sequence component: T = Ii/Ib
The negative sequence current is determined based on the phase currents:
- 3 phases

$$\vec{Ii} = \frac{1}{3} \times (\vec{I1} + a^2\vec{I2} + a\vec{I3})$$

with $a = e^{j\frac{2\pi}{3}}$

- 2 phases

$$\left|\vec{Ii}\right| = \frac{1}{\sqrt{3}} \times \left|\vec{I1} - a^2\vec{I3}\right|$$

with $a = e^{j\frac{2\pi}{3}}$

These 2 formulas are equivalent when there is no earth fault.

Readout

The measurements may be accessed via:
- the display of a Sepam with advanced UMI by pressing the key
- the display of a PC with the SFT2841 software
- the communication link.

Characteristics

Measurement range	10 to 500
Unit	% Ib
Accuracy	±2 %
Display format	3 significant digits
Resolution	1 %
Refresh interval	1 second (typical)

Disturbance recording

Operation

This function is used to record analog signal and logical states.
Record storage is activated according to parameter setting by a triggering event (see Control and monitoring functions - Disturbance recording triggering).
The stored event begins before the triggering event and continues afterwards.
The record comprises the following information:
- values sampled from the different signals
- date
- characteristics of the recorded channels.

The files are recorded in FIFO (First In First Out) type shift storage: the oldest record is erased when a new record is triggered.

Transfer

Files may be transferred locally or remotely:
- locally: using a PC which is connected to the pocket terminal connector and has the SFT2841 software tool
- remotely: using a software tool specific to the remote monitoring and control system.

Recovery

The signals are recovered from a record by means of the SFT2826 software tool.

Principle

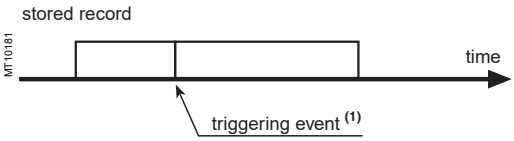

Characteristics

Record duration	x periods before the triggering event (1) total 86 periods
Record content	Set-up file: date, channel characteristics, measuring transformer ratio Sample file: 12 values per period/recorded signal
Analog signals recorded (2)	4 current channels (I1, I2, I3, I0) or 4 voltage channels (V1, V2, V3)
Logical signals	10 digital inputs, outputs O1, pick-up
Number of stored records	2
File format	COMTRADE 97

(1) *According to parameter setting with the SFT2841 (default setting 36 cycles).*
(2) *According to sensor type and connection.*

Running hours counter and operating time
Thermal capacity used

Running hours counter / operating time

The counter gives the running total of time during which the protected device (motor or transformer) has been operating (I > 0.1Ib). The initial counter value may be modified using the SFT2841 software.
The counter is saved every 4 hours.

Readout

The measurements may be accessed via:
- the display of a Sepam with advanced UMI by pressing the key
- the display of a PC with the SFT2841 software
- the communication link.

Characteristics

Range	0 to 65535
Unit	hours

Thermal capacity used

Operation

The thermal capacity used is calculated by the thermal protection function.
The thermal capacity used is related to the load. The thermal capacity used measurement is given as a percentage of the rated thermal capacity.

Saving of thermal capacity used

When the protection unit trips, the current thermal capacity used increased by 10 % (1) is saved. The saved value is reset to 0 when the thermal capacity used has decreased sufficiently for the start inhibit time delay to be zero. The saved value is used again after a Sepam power outage, making it possible to start over with the temperature buildup that caused the trip.
(1) *The 10 % increase is used to take into account the average temperature buildup of motors when starting.*

Readout

The measurements may be accessed via:
- the display of a Sepam with advanced UMI by pressing the key
- the display of a PC with the SFT2841 software
- the communication link
- an analog converter with the MSA141 option.

Characteristics

Measurement range	0 to 800 %
Unit	%
Display format	3 significant digits
Resolution	1 %
Refresh interval	1 second (typical)

2

Remaining operating time before overload tripping

Operation

The time is calculated by the thermal protection function. It depends on the thermal capacity used.

Readout

The measurements may be accessed via:
- the display of a Sepam with advanced UMI by pressing the key
- the display of a PC with the SFT2841 software
- the communication link.

Characteristics

Measurement range	0 to 999 mn
Unit	mn
Display format	3 significant digits
Resolution	1 mn
Refresh interval	1 second (typical)

Waiting time after overload tripping

Operation

The time is calculated by the thermal protection function. It depends on the thermal capacity used.

Readout

The measurements may be accessed via:
- the display of a Sepam with advanced UMI by pressing the key
- the display of a PC with the SFT2841 software
- the communication link.

Characteristics

Measurement range	0 to 999 mn
Unit	mn
Display format	3 significant digits
Resolution	1 mn
Refresh period	1 second (typical)

Starting current and starting / overload time

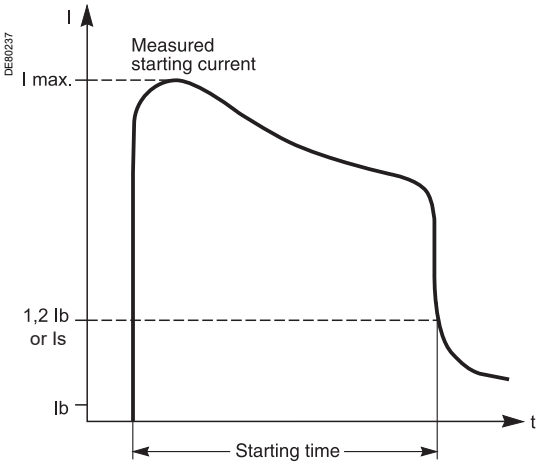

Operation

The starting time is defined as follows:

■ If the locked rotor/excessive starting time protection (ANSI code 48/51LR) is active, the starting time is the time separating the moment when one of the 3 phase currents exceeds Is and the moment when the 3 currents drop back below Is, Is being the value of the current set point for protection function 48/51LR. The minimum value of set point Is is 0.5 Ib.

■ If the locked rotor/excessive starting time protection (ANSI code 48/51LR) is not active, the starting time is the time separating the moment when one of the 3 phase currents exceeds 1.2 Ib and the moment when the 3 currents drop back below 1.2 Ib. The maximum phase current obtained during this time corresponds to the starting current.

Both values are saved in the event of a power failure.

Readout

The measurements may be accessed via:

■ the display of a Sepam with advanced UMI by pressing the key

■ the display of a PC with the SFT2841 software

■ the communication link.

Characteristics

Starting / overload time		
Measurement range		0 to 300 s
Unit		s or ms
Display format		3 significant digits
Resolution		10 ms or 1 digit
Refresh interval		1 second (typical)
Starting / overload current		
Measurement range	48/51LR active	Is to 24 In (1)
	48/51LR inactive	1.2 Ib to 24 In (1)
Unit		A or kA
Display format		3 significant digits
Resolution		0.1 A or 1 digit
Refresh interval		1 second (typical)

(1) *Or 65.5 kA.*

Number of starts before inhibition

Operation

The number of starts allowed before inhbition is calculated by the number of starts protection function (ANSI code 66).
The number of starts depends on the thermal state of the motor.

Readout

This measurement may be accessed via:
- the display of a Sepam with advanced UMI by pressing the key
- the display of a PC with the SFT2841 software
- the communication link.

Resetting to zero

The number of starts counters may be reset to zero as follows, after the entry of a password:
- on the advanced UMI display unit by pressing the clear key
- on the display of a PC with the SFT2841 software.

Characteristics

Measurement range	0 to 60
Unit	none
Display format	3 significant digits
Resolution	1
Refresh interval	1 second (typical)

Start inhibit time delay

Operation

The start inhibit time only applies to the M20 motor application. It depends on both the starts per hour protection (ANSI code 66) and the machine thermal overload protection (ANSI code 49RMS) if they have been activated. This time expresses the waiting time until another start is allowed.

If at least one of these functions starts up, a "START INHIBIT" message informs the user that starting the motor is not allowed.

Readout

The number of starts and waiting time may be accessed via:
- the display of a Sepam with advanced UMI by pressing the key
- the display of a PC with the SFT2841 software
- the communication link.

Characteristics

Measurement range	0 to 360 mn
Unit	mn
Display format	3 significant digits
Resolution	1 mn
Refresh interval	1 second (typical)

Cumulative breaking current and number of operations

Cumulative breaking current

Operation

This function indicates the cumulative breaking current in square kiloamperes $(kA)^2$ for five current ranges.
It is based on measurement of the fundamental component.
The current ranges displayed are:
- 0 < I < 2 In
- 2 In < I < 5 In
- 5 In < I < 10 In
- 10 In < I < 40 In
- I > 40 In.

The function also provides the total number of operations and the cumulative total of breaking current in $(kA)^2$.
Each value is saved in the event of a power failure.
Refer to switchgear documentation for use of this information.

Number of operation

The function is activated by tripping commands (O1 relay).
This value is saved in the event of a power failure.

Readout

The measurements may be accessed via:
- the display of a Sepam with advanced UMI by pressing the key
- the display of a PC with the SFT2841 software
- the communication link.

The initial values may be introduced using the SFT2841 software tool to take into account the real state of a used breaking device.

Characteristics

Breaking current $(kA)^2$	
Range	0 to 65535 $(kA)^2$
Unit	primary $(kA)^2$
Accuracy (1)	±10 %
Number of operations	
Range	0 to 65535

(1) *At In, in reference conditions (IEC 60255-6).*

Operating time

Operation

This function gives the value of the opening operating time of a breaking device (1) and change of status of the device open position contact connected to the I11 input (2).
The function is inhibited when the input is set for AC voltage (3).
The value is saved in the event of a power failure.

Readout

The measurement may be accessed via:
- the display of a Sepam with advanced UMI by pressing the key
- the display of a PC with the SFT2841 software
- the communication link.

(1) *Refer to switchgear documentation for use of this information.*
(2) *Optional MES module.*
(3) *Optional MES114E or MES114F modules.*

Characteristics

Measurement range	20 to 100
Unit	ms
Accuracy	typically ±1 ms
Display format	3 significant digits

Charging time

Operation

This function gives the value of the breaking device (1) operating mechanism charging time, determined according to the device closed position status change contact and the end of charging contact connected to the Sepam I12 and I24 (2).
The value is saved in the event of a power failure.

Readout

The measurement may be accessed via:
- the display of a Sepam with advanced UMI by pressing the key
- the display of a PC with the SFT2841 software
- the communication link.

(1) *Refer to switchgear documentation for use of this information.*
(2) *Optional MES114 or MES114E or MES114F modules.*

Characteristics

Measurement range	1 to 20
Unit	s
Accuracy	±0.5 sec
Display format	3 significant digits

Contents

Setting ranges 34

Phase-to-phase undervoltage 36
ANSI code 27

Positive sequence undervoltage and phase rotation direction check 37
ANSI code 27D/47

Remanent undervoltage 38
ANSI code 27R

Phase-to-neutral undervoltage 39
ANSI code 27S

Phase undercurrent 40
ANSI code 37

Temperature monitoring 41
ANSI code 38/49T

Negative sequence / unbalance 42
ANSI code 46

Excessive starting time, locked rotor 44
ANSI code 48/51LR/14

Thermal overload 45
ANSI code 49RMS

Phase overcurrent 54
ANSI code 50/51

Phase overcurrent Cold Load Pick-Up/Blocking 56
CLPU 50/51

Breaker failure 58
ANSI code 50BF

Earth fault 60
ANSI code 50N/51N or 50G/51G

Earth fault Cold Load Pick-Up/Blocking 62
CLPU 50N/51N

Phase-to-phase overvoltage 64
ANSI code 59

Neutral voltage displacement 65
ANSI code 59N

Starts per hour 66
ANSI code 66

Recloser 67
ANSI code 79

Overfrequency 69
ANSI code 81H

Underfrequency 70
ANSI code 81L

Rate of change of frequency 71
ANSI code 81R

General 72
Tripping curves

Functions	Settings			Time delays
ANSI 27 - Phase-to-phase undervoltage				
	5 to 120 % of Unp			0.05 s to 300 s
ANSI 27D/47 - Positive sequence undervoltage				
	5 to 60 % of Unp			0.05 s to 300 s
ANSI 27R - Remanent undervoltage				
	5 to 100 % of Unp			0.05 s to 300 s
ANSI 27S - Phase-to-neutral undervoltage				
	5 to 120 % of Vnp			0.05 s to 300 s
ANSI 37 - Phase undercurrent				
	0.15 to 1 Ib			0.05 s to 300 s
ANSI 38/49T - Temperature monitoring (8 or 16 RTDs)				
Alarm and trip set points	0 to 180 °C (or 32 to 356 °F)			
ANSI 46 - Negative sequence / unbalance				
Definite time	0.1 to 5 Ib			0.1 s to 300 s
IDMT	0.1 to 0.5 Ib			0.1 s to 1 s
ANSI 48/51LR/14 - Excessive starting time, locked rotor				
	0.5 Ib to 5 Ib	ST starting time		0.5 s to 300 s
		LT and LTS time delays		0.05 s to 300 s
ANSI 49RMS - Thermal overload			**Rate 1**	**Rate 2**
Accounting for negative sequence component		0 - 2,25 - 4,5 - 9		
Time constant	Heating		T1: 1 to 120 mn	T1: 1 to 120 mn
	Cooling		T2: 5 to 600 mn	T2: 5 to 600 mn
Alarm and tripping set points		50 to 300 % of rated thermal capacity		
Cold curve modification factor		0 to 100 %		
Switching of thermal settings conditions		By logic input I26 (transformer)		
		By Is set point adjustable from 0.25 to 8 Ib (motor)		
Maximum equipment temperature		60 to 200 °C (140 °F to 392 °F)		
ANSI 50/51 - Phase overcurrent				
	Tripping time delay	**Timer hold**		
Tripping curve	Definite time	DT		
	SIT, LTI, VIT, EIT, UIT (1)	DT		
	RI	DT		
	IEC: SIT/A, LTI/B, VIT/B, EIT/C	DT or IDMT		
	IEEE: MI (D), VI (E), EI (F)	DT or IDMT		
	IAC: I, VI, EI	DT or IDMT		
Is set point	0.1 to 24 In	Definite time		Inst ; 0.05 s to 300 s
	0.1 to 2.4 In	IDMT		0.1 s to 12.5 s at 10 Is
Timer hold	Definite time (DT ; timer hold)			Inst ; 0.05 s to 300 s
	IDMT (IDMT ; reset time)			0.5 s to 20 s
Short circuit current Isc min	In to 999 kA			
CLPU 50/51 - Phase Overcurrent Cold Load Pick-Up/Blocking				
Time before activation Tcold				0.1 to 300 s
Pick-up threshold CLPUs	10 to 100% of In			
Global action CLPU 50/51	Blocking or multiplication of the set point			
Action on unit x ANSI 50/51	OFF or ON			
Time delay T/x				100 ms to 999 min
Multiplying factor M/x	100 to 999% of Is			
ANSI 50BF - Breaker failure				
Presence of current	0.2 to 2 In			
Operating time	0.05 to 300 s			

(1) *Tripping as of 1.2 Is.*

Functions	Settings		Time delays
ANSI 50N/51N or 50G/51G - Earth fault / Sensitive earth fault			
	Tripping time delay	**Timer hold**	
Tripping curve	Definite time	DT	
	SIT, LTI, VIT, EIT, UIT (1)	DT	
	RI	DT	
	IEC: SIT/A,LTI/B, VIT/B, EIT/C	DT or IDMT	
	IEEE: MI (D), VI (E), EI (F)	DT or IDMT	
	IAC: I, VI, EI	DT or IDMT	
Is0 set point	0.1 to 15 In0	Definite time	Inst ; 0.05 s to 300 s
	0.1 to 1 In0	IDMT	0.1 s to 12.5 s at 10 Is0
Timer hold	Definite time (DT ; timer hold)		Inst ; 0.05 s to 300 s
	IDMT (IDMT ; reset time)		0.5 s to 20 s
CLPU 50N/51N - Earth Fault Cold Load Pick-Up/Blocking			
Time before activation Tcold			0.1 to 300 s
Pick-up threshold CLPUs	10 to 100% of In		
Global action CLPU 50N/51N	Blocking or multiplication of the set point		
Action on unit x ANSI 50N/51N	OFF or ON		
Time delay T0/x			100 ms to 999 min
Multiplying factor M0/x	100 to 999% of Is0		
ANSI 59 - Overvoltage phase-to-phase			
	50 to 150% of Unp (or Vnp) if Uns < 208 V		0.05 s to 300 s
	50 to 135% of Unp (or Vnp) if Uns ⩾ 208 V		0.05 s to 300 s
ANSI 59N - Neutral voltage displacement			
	2 to 80 % of Unp		0.05 s to 300 s
ANSI 66 - Starts per hour			
Starts per period	1 to 60	Period	1 to 6 hr
Consecutive starts	1 to 60	Time between starts	0 to 90 mn
ANSI 81H - Overfrequency			
	50 to 53 Hz or 60 to 63 Hz		0.1 s to 300 s
ANSI 81L - Underfrequency			
	45 to 50 Hz or 55 to 60 Hz		0.1 s to 300 s
ANSI 81R - Rate of change of frequency			
	0.1 to 10 Hz/s		Inst ; 0.15 s to 300 s

(1) *Tripping as of 1.2 Is.*

Phase-to-phase undervoltage
ANSI code 27

Operation

The protection function is three-phase:
- it picks up if one of the 3 phase-to-phase voltages drops below the Us set point
- it includes a definite time delay T.

Block diagram

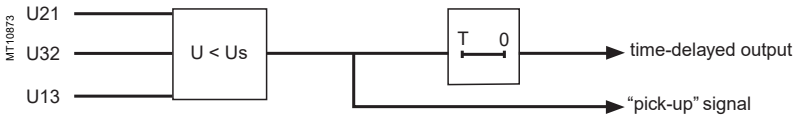

Characteristics

Us set point	
Setting	5 % Unp to 120 % Unp
Accuracy (1)	±2 % or 0.005 Unp
Resolution	1 %
Drop-out/pick-up ratio	103 % ±2.5 %
Time delay T	
Setting	50 ms to 300 s
Accuracy (1)	±2 %, or ±25 ms
Resolution	10 ms or 1 digit
Characteristic times	
Operation time	pick-up < 35 ms (typically 25 ms)
Overshoot time	< 35 ms
Reset time	< 40 ms

(1) *In reference conditions (IEC 60255-6).*

Positive sequence undervoltage and phase rotation direction check
ANSI code 27D/47

Operation

Positive sequence undervoltage
The protection picks up when the positive sequence component Vd of a three-phase voltage system drops below the Vsd set point with

$$\vec{V}d = \frac{1}{3}(\vec{V}1 + \vec{V}2 + a^2\vec{V}3)$$

$$\vec{V}d = \frac{1}{3}(\vec{U}21 - a^2\vec{U}32)$$

with $V = \frac{U}{\sqrt{3}}$ and $a = e^{j\frac{2\pi}{3}}$

- it includes a definite time delay T
- it allows drops in motor electrical torque to be detected.

Phase rotation direction
This protection also allows the phase rotation direction to be detected.
The protection considers that the phase rotation direction is inverse when the positive sequence voltage is less than 10 % of Unp and when the phase-to-phase voltage is greater than 80 % of Unp.

Block diagram

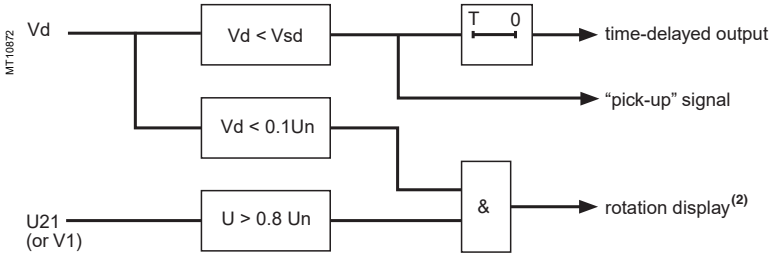

Characteristics

Vsd set point	
Setting	5 % Unp to 60 % Unp
Accuracy (1)	±2 % or ±0.005 Unp
Pick-up/drop-out ratio	103 % ±2.5 %
Resolution	1 %
Time delay	
Setting	50 ms to 300 s
Accuracy (1)	±2 %, or ±25 ms
Resolution	10 ms or 1 digit
Characteristics times	
Operating time	pick-up < 55 ms
Overshoot time	< 35 ms
Reset time	< 35 ms

(1) *In reference conditions (IEC 60255-6).*
(2) *Displays "rotation" instead of positive sequence voltage measurement.*

Remanent undervoltage
ANSI code 27R

Operation

This protection is single-phase:
- it picks up when the U21 phase-to-phase voltage is less than the Us set point
- the protection includes a definite time delay.

Block diagram

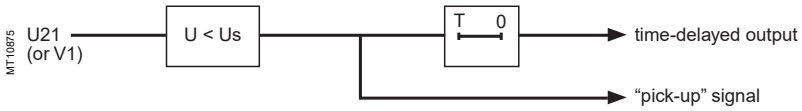

Characteristics

Us set point	
Setting	5 % Unp to 100 % Unp
Accuracy (1)	±2 % or 0.005 Unp
Resolution	1 %
Drop-out/pick-up ratio	103 % ±2.5 %
Time delay T	
Setting	50 ms to 300 s
Accuracy (1)	±2 %, or ±25 ms
Resolution	10 ms or 1 digit
Characteristic times	
Operation time	< 40 ms
Overshoot time	< 20 ms
Reset time	< 30 ms

(1) *In reference conditions (IEC 60255-6).*

Phase-to-neutral undervoltage
ANSI code 27S

Operation

This protection is three-phase:
- it picks up when one of the 3 phase-to-neutral voltages drops below the Vs set point
- it has 3 independent outputs available for the control matrix
- it is operational if the number of VTs connected is V1, V2, V3 or U21, U32 with measurement of V0.

Block diagram

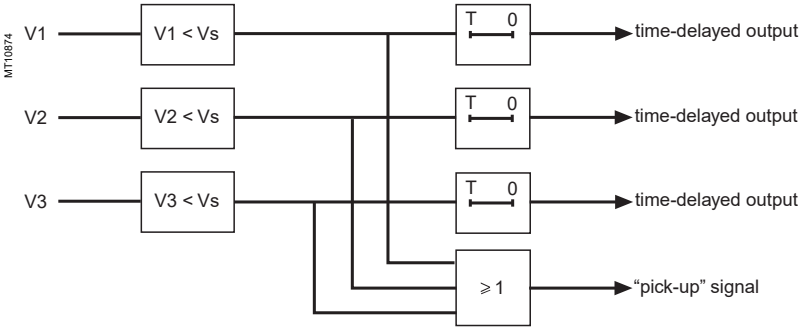

Characteristics

Vs set point	
Setting	5 % Vnp to 120 % Vnp
Accuracy (1)	±2 % or 0.005 Vnp
Resolution	1 %
Drop-out/pick-up ratio	103 % ±2.5 %
Time delay T	
Setting	50 ms to 300 s
Accuracy (1)	±2 %, or ±25 ms
Resolution	10 ms or 1 digit
Characteristic times	
Operation time	pick-up < 35 ms (typically 25 ms)
Overshoot time	< 35 ms
Reset time	< 40 ms

(1) *In reference conditions (IEC 60255-6).*

Phase undercurrent
ANSI code 37

Operation

This protection is single-phase:
- it picks up when phase 1 current drops below the Is set point
- it is inactive when the current is less than 10 % of Ib
- it is insensitive to current drops (breaking) due to circuit breaker tripping
- it includes a definite time delay T.

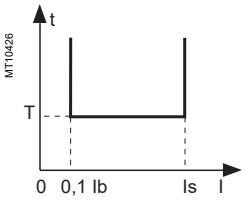

Operating principle

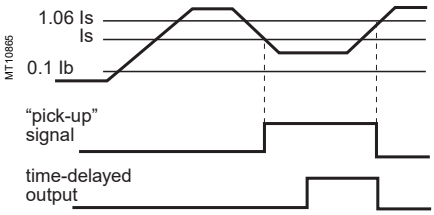

Case of current sag.

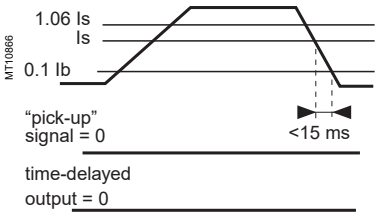

Case of circuit breaker tripping.

Block diagram

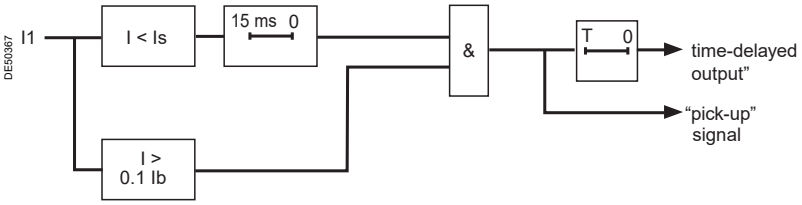

Characteristics

Is set point	
Setting	15 % Ib ⩽ Is ⩽ 100 % Ib by steps of 1 %
Accuracy (1)	±5 %
Pick-up/drop-out ratio	106 % ±5 % for Is > 0.1 In
T time delay	
Setting	50 ms ⩽ T ⩽ 300 s
Accuracy (1)	±2 % or ±25 ms
Resolution	10 ms or 1 digit
Characteristic times	
Operating time	< 50 ms
Overshoot time	< 35 ms
Reset time	< 40 ms

(1) *In reference conditions (IEC 60255-6).*

Temperature monitoring
ANSI code 38/49T

Operation

This protection is associated with an RTD of the Pt100 platinum (100 Ω at 0°C or 32°F) or Ni100 or Ni120 nickel type in accordance with the IEC 60751 and DIN 43760 standards.

- it picks up when the monitored temperature is greater than the Ts set point
- it has two independent set points:
  - alarm set point
  - tripping set point
- when the protection is activated, it detects whether the RTD is shorted or disconnected:
  - RTD shorting is detected if the measured temperature is less than -35 °C or -31 °F (measurement displayed "****")
  - RTD disconnection is detected if the measured temperature is greater than +205 °C or +401 °F (measurement displayed "-****").

If an RTD fault is detected, the set point output relays are inhibited: the protection outputs are set to zero.

The "RTD fault" item is also made available in the control matrix and an alarm message is generated.

Block diagram

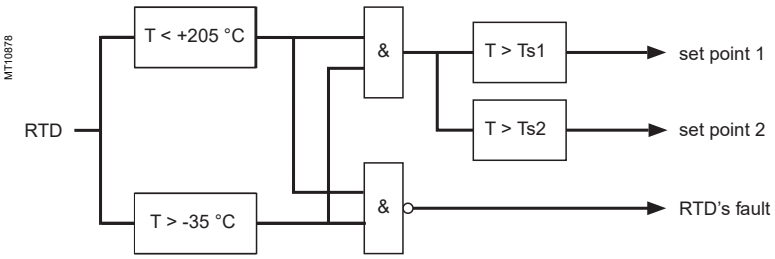

Characteristics

Ts1 and Ts2 set points	°C	°F
Setting	0 °C to 180 °C	32 °F to 356 °F
Accuracy (1)	±1.5 °C	±2.7 °F
Resolution	1 °C	1 °F
Pick-up/drop-out difference	3 °C ±0.5 °	
Characteristic times		
Operation time	< 5 seconds	

(1) See "connection of MET148-2 module" chapter for accuracy derating according to wiring cross-section.

Negative sequence / unbalance
ANSI code 46

Operation

The negative sequence / unbalance protection function:

- picks up if the negative sequence component of phase currents is greater than the operation set point
- it is time-delayed. The time delay may be definite time or IDMT (see curve).

The negative sequence current is determined according to the 3 phase currents.

$$\vec{Ii} = \frac{1}{3} \times (\vec{I1} + a^2\vec{I2} + a\vec{I3})$$

with $a = e^{j\frac{2\pi}{3}}$

If Sepam is connected to 2 phase current sensors only, the negative sequence current is:

$$\left|\vec{Ii}\right| = \frac{1}{\sqrt{3}} \times \left|\vec{I1} - a^2\vec{I3}\right|$$

with $a = e^{j\frac{2\pi}{3}}$

Both formulas are equivalent when there is no zero sequence current (earth fault).

Definite time protection

Is is the operation set point expressed in Amps, and T is the protection operation time delay.

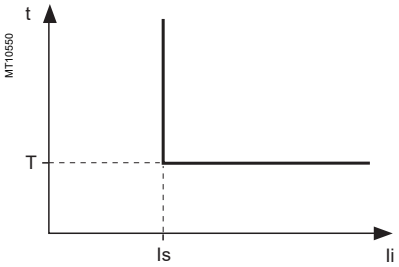

Definite time protection principle.

IDMT protection

For Ii > Is, the time delay depends on the value of Ii/Ib (Ib: basis current of the protected equipment defined when the general parameters are set)

T corresponds to the time delay for Ii/Ib = 5.

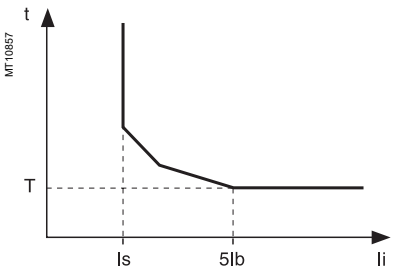

IDMT protection principle.

The tripping curve is defined according to the following equations:

- for Is/Ib ⩽ Ii/Ib ⩽ 0.

$$t = \frac{3.19}{(Ii/Ib)^{1.5}} . T$$

- for 0.5 ⩽ Ii/Ib ⩽ 5

$$t = \frac{4.64}{(Ii/Ib)^{0.96}} . T$$

- for Ii/Ib > 5

t = T

Block diagram

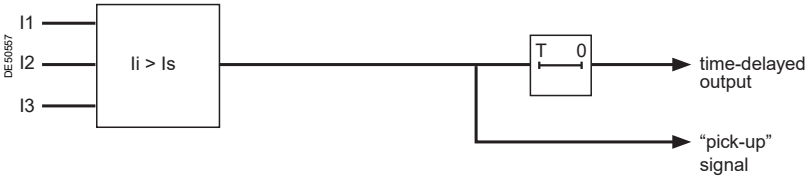

Characteristics

Curve		
Setting	Definite, IDMT	
Is set point		
Setting	Definite time	10 % Ib ⩽ Is ⩽ 500 % Ib
	IDMT	10 % Ib ⩽ Is ⩽ 50 % Ib
Resolution		1 %
Accuracy (1)		±5 %
Time delay T (operation time at 5 Ib)		
Setting	Definite time	100 ms ⩽ T ⩽ 300 s
	IDMT	100 ms ⩽ T ⩽ 1 s
Resolution		10 ms or 1 digit
Accuracy (1)	Definite time	±2 % or ±25 ms
	IDMT	±5 % or ±35 ms
Pick-up/drop-out ratio		93.5 % ±5 %
Characteristic times		
Operation time		pick-up < 55 ms
Overshoot time		< 35 ms
Reset time		< 55 ms

(1) *In reference conditions (IEC 60255-6).*

Negative sequence / unbalance
ANSI code 46

Determination of tripping time for different negative sequence current values for a given curve

Use the table to find the value of K that corresponds to the required negative sequence current. The tripping time is equal to KT.

Example

given a tripping curve with the setting T = 0.5 s.
What is the tripping time at 0.6 Ib?
Use the table to find the value of K that corresponds to 60 % of Ib.
The table reads K = 7.55. The tripping time is equal to:
0.5 x 7.55 = 3.755 s.

IDMT tripping curve

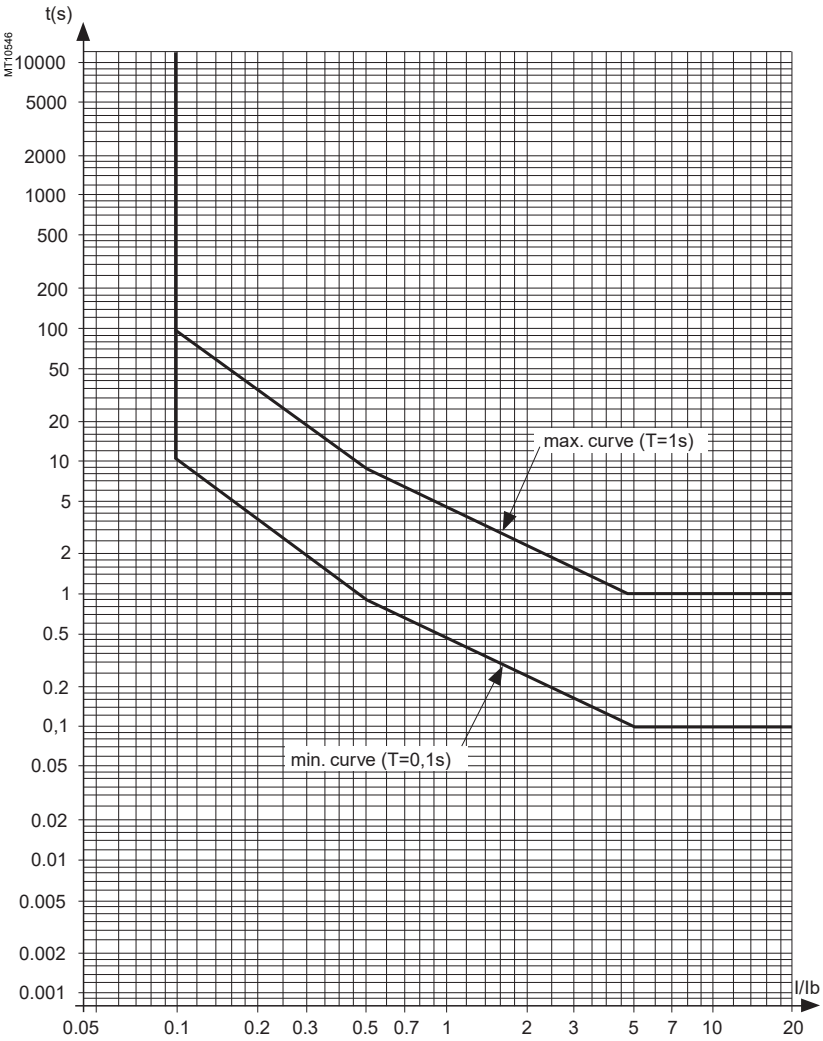

Ii (% Ib)	10	15	20	25	30	33.33	35	40	45	50	55	57.7	60	65	70	75
K	99.95	54.50	35.44	25.38	19.32	16.51	15.34	12.56	10.53	9.00	8.21	7.84	7.55	7.00	6.52	6.11

Ii (% Ib) cont'd	80	85	90	95	100	110	120	130	140	150	160	170	180	190	200	210
K cont'd	5.74	5.42	5.13	4.87	4.64	4.24	3.90	3.61	3.37	3.15	2.96	2.80	2.65	2.52	2.40	2.29

Ii (% Ib) cont'd	22.	230	240	250	260	270	280	290	300	310	320	330	340	350	360	370
K cont'd	2.14	2.10	2.01	1.94	1.86	1.80	1.74	1.68	1.627	1.577	1.53	1.485	1.444	1.404	1.367	1.332

Ii (% Ib) cont'd	380	390	400	410	420	430	440	450	460	470	480	490	⩾ 500
K cont'd	1.298	1.267	1.236	1.18	1.167	1.154	1.13	1.105	1.082	1.06	1.04	1.02	1

Excessive starting time, locked rotor
ANSI code 48/51LR/14

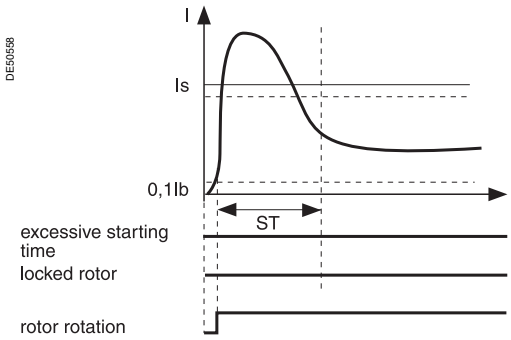

Case of normal starting.

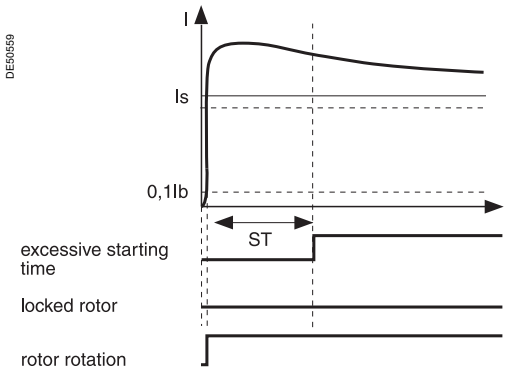

Case of excessive starting time.

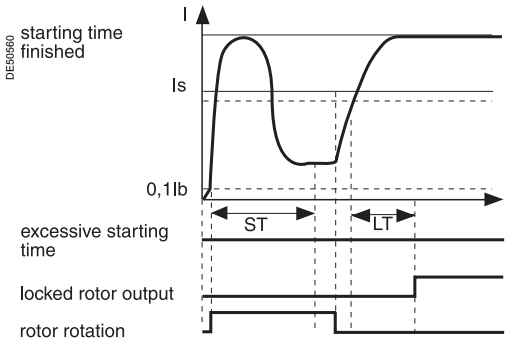

Case of locked rotor output.

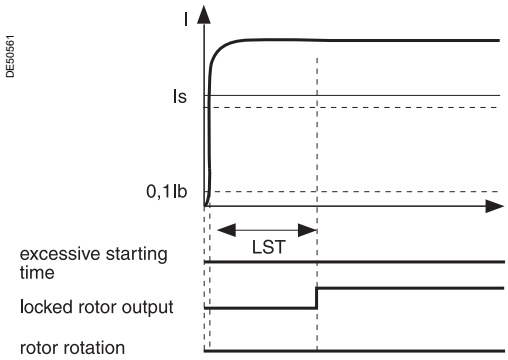

Case of starting locked rotor.

Operation

This function is three-phase.
It comprises two parts:

- excessive starting time: during starting, the protection picks up when one of the 3 phase currents is greater than the set point Is for a longer period of time than the ST time delay (normal starting time)
- locked rotor:
  - at the normal operating rate (after starting), the protection picks up when one of the 3 phase currents is greater than the set point Is for a longer period of time than the LT time delay of the definite time type
  - locked on start: large motors may have very long starting time, due to their inertia or the reduce voltage supply. This starting time is longer than the permissive rotor blocking time. To protect such a motor LTS timer initiate a trip if a start has been detected (I > Is) or if the motor speed is zero. For a normal start, the input I23 (zero-speed-switch) disable this protection.

Motor re-acceleration

When the motor re-accelerates, it consumes a current in the vicinity of the starting current (> Is) without the current first passing through a value less than 10 % of Ib. The ST time delay, which corresponds to the normal starting time, may be reinitialized by a logic data input for particular uses (input I22).

- reinitialize the **excessive starting time** protection
- set the **locked rotor** protection LT time delay to a low value.

Starting is detected when the current consumed is 10 % greater than the Ib current.

Block diagram

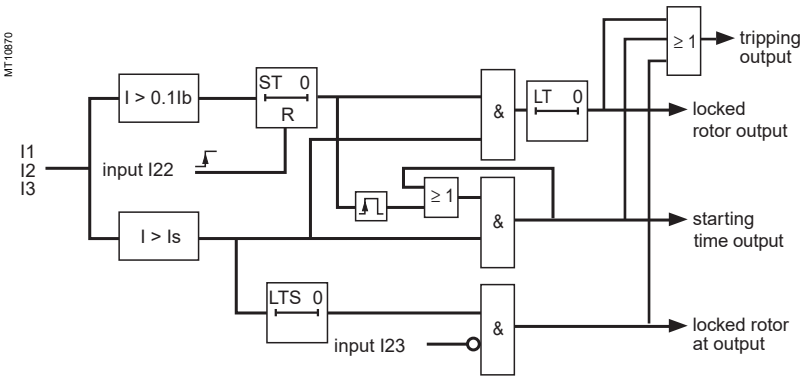

Characteristics

Is set point		
Setting		50 % Ib ⩽ Is ⩽ 500 % Ib
Resolution		1 %
Accuracy (1)		±5 %
Pick-up/drop-out ratio		93.5 % ±5 %
ST, LT and LTS time delays		
Setting	ST	500 ms ⩽ T ⩽ 300 s
	LT	50 ms ⩽ T ⩽ 300 s
	LTS	50 ms ⩽ T ⩽ 300 s
Resolution		10 ms or 1 digit
Accuracy (1)		±2 % or from -25 ms to +40 ms

***(1)** In reference conditions (IEC 60255-6).*

Thermal overload
ANSI code 49RMS

Description

This function is used to protect equipment (motors, transformers, generators, lines, capacitors) against overloads, based on measurement of the current consumed.

Operation curve

The protection gives a trip order when the heat rise E, calculated according to the measurement of an equivalent current Ieq, is greater than the set point Es. The greatest permissible continuous current is

$$I = Ib\sqrt{Es}$$

The protection tripping time is set by the time constant T.

- the calculated heat rise depends on the current consumed and the previous heat rise state
- the cold curve defines the protection tripping time based on zero heat rise
- the hot curve defines the protection tripping time based on 100 % nominal heat rise.

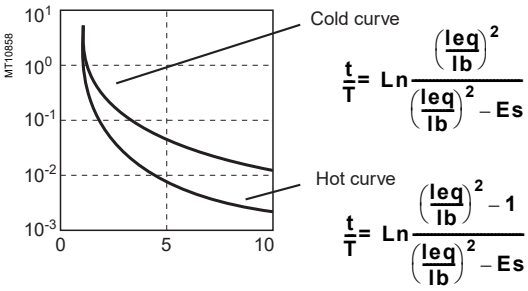

Alarm set point, tripping set point

Two set points may be set for heat rise:

- Es1: alarm
- Es2: tripping.

"Hot state" set point

When the function is used to protect a motor, this fixed set point is designed for detection of the hot state used by the number of starts function.

Heat rise and cooling time constants

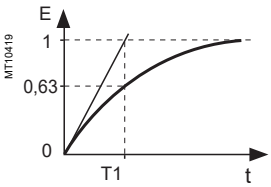

Heat rise time constant.

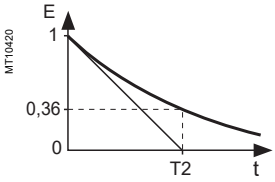

Cooling time constant.

For self-ventilated rotating machines, cooling is more effective when the machine is running than when it is stopped. Running and stopping of the equipment are calculated from the value of the current:

- running if I > 0.1 Ib
- stopped if I < 0.1 Ib.

Two time constants may be set:

- T1: heat rise time constant: concerns equipment that is running
- T2: cooling time constant: concerns equipment that is stopped.

Accounting for harmonics

The current measured by the thermal protection is an RMS 3-phase current which takes into account harmonics up to number 17.

Accounting for ambient temperature

Most machines are designed to operate at a maximum ambient temperature of 40 °C (104 °F). The thermal overload function takes into account the ambient temperature (Sepam equipped with the temperature sensor module option, with sensor no. 8 assigned to measurement of ambient temperature) to increase the calculated heat rise value when the temperature measured exceeds 40 °C (104 °F).

Increase factor: $fa = \frac{Tmax - 40°C}{Tmax - Tambient}$

in which T max is the equipment's maximum temperature (according to insulation class)
T ambient is the measured temperature.

Adaptation of the protection to motor thermal withstand

Motor thermal protection is often set based on the hot and cold curves supplied by the machine manufacturer. To fully comply with these experimental curves, additional parameters must be set:

- initial heat rise, Es0, is used to reduce the cold tripping time.

modified cold curve: $\frac{t}{T} = Ln\frac{\left(\frac{Ieq}{Ib}\right)^2 - Es0}{\left(\frac{Ieq}{Ib}\right)^2 - Es}$

- a second group of parameters (time constants and set points) is used to take into account thermal withstand with locked rotors. This second set of parameters is taken into account when the current is greater than an adjustable set point Is.

Accounting for negative sequence current

In the case of motors with coiled rotors, the presence of a negative sequence component increases the heat rise in the motor. The negative sequence component of the current is taken into account in the protection by the equation:

$$Ieq = \sqrt{Iph^2 + K \cdot Ii^2}$$

in which Iph is the greatest phase current
Ii is the negative sequence component of the current
K is an adjustable factor

K may have the following values: 0 - 2.25 - 4.5 - 9

For an asynchronous motor, K is determined as follows:

$$K = 2 \cdot \frac{Cd}{Cn} \cdot \frac{1}{g \cdot \left(\frac{Id}{Ib}\right)^2} - 1$$

in which Cn, Cd: rated torque and starting torque
Ib, Id: basis current and starting current
g: rated slip.

Saving of heat rise

When the protection trips, the current heat rise, increased by 10 %, is saved (Increasing by 10 % makes it possible to take into account the average heat rise of motors when starting). The saved value is reset to zero when the heat rise decreases sufficiently for the time before starting to be zero. The saved value is used when the power returns after a Sepam power failure, so as to start up again with the heat rise that triggered tripping.

Thermal overload
ANSI code 49RMS

Start inhibit
The thermal overload protection can inhibit the closing of the motor's control device until the heat rise drops back down below a value that allows restarting.
This value takes into account the heat rise produced by the motor when starting.
The inhibition function is grouped together with the **starts per hour** protection and the indication START INHIBIT informs the user.

Inhibition of the thermal overload protection function
Tripping of the thermal overload protection function (in the case of a motor) may be locked out, when required by the process, by:
- logic input I26
- remote control order TC7 (inhibit thermal overload protection).

Remote control order TC13 may be used to enable the operation of the thermal overload protection function.

Taking into account 2 transformer operating rates
Power transformers often have two ventilation operating rates:
- ONAN (Oil Natural, Air Natural)
- ONAF (Oil Natural, Air Forced).

The two groups of thermal overload protection parameters enable both of these operating rates to be taken into account.
Switching from one group of thermal settings to the other is controlled by logic input I26.
Switching is carried out without any loss of the thermal capacity used value.

Taking into account 2 motor operating rates
Switching from one set of thermal settings to the other is controlled by.
- logic input I26
- overrun of a set point by the equivalent current.

The 2 groups of thermal overload protection parameters enable both operating rates to be taken into account.
Switching is carried out without any loss of the thermal capacity used value.

User information
The following information is available for the user:
- time before restart enabled (in case of inhibition of starting)
- time before tripping (with constant current)
- heat rise.

See chapter "Machine operation assistance functions".

Characteristics

Set points		**group A**	**group B**
Setting	Es1 alarm set point	50 % to 300 %	50 % to 300 %
	Es2 tripping set point	50 % to 300 %	50 % to 300 %
	Es0 initial heat rise	0 to 100 %	0 to 100 %
Resolution		1 %	1 %
Time constants			
Setting	T1 running (heat rise)	1 mn to 120 mn	1 mn to 120 mn
	T2 stopped (cooling)	5 mn to 600 mn	5 mn to 600 mn
Resolution		1 mn	1 mn
Accounting for negative sequence component			
Setting	K	0 —2.25 —4.5 —9	
Maximum equipment temperature (according to insulation class) (2)			
Setting	T max 60°C to 200°C (140°F to 392°F)		
Resolution	1°		
RMS current measurement			
Accuracy	5 %		
Tripping time			
Accuracy (1)	2 % or 1 s		
Change of setting parameters			
By current threshold for motor			
Is set point		0.25 to 8 Ib	
By digital input for transformer			
Input		I26	

(1) *In reference conditions (IEC 60255-8).*
(2) *Equipment manufacturer data.*

TS/TC equivalence for each protocol

Modbus	**DNP3**	**IEC 60870-5-103**	**IEC 61850**
TC	**Binary Output**	**ASDU, FUN, INF**	**LN.DO.DA**
TC7	BO10	20, 106,3 (ON)	PTTR.InhThmPro.ctlVal
TC13	BO11	20, 106,3 (OFF)	PTTR.InhThmPro.ctlVal

Block diagram

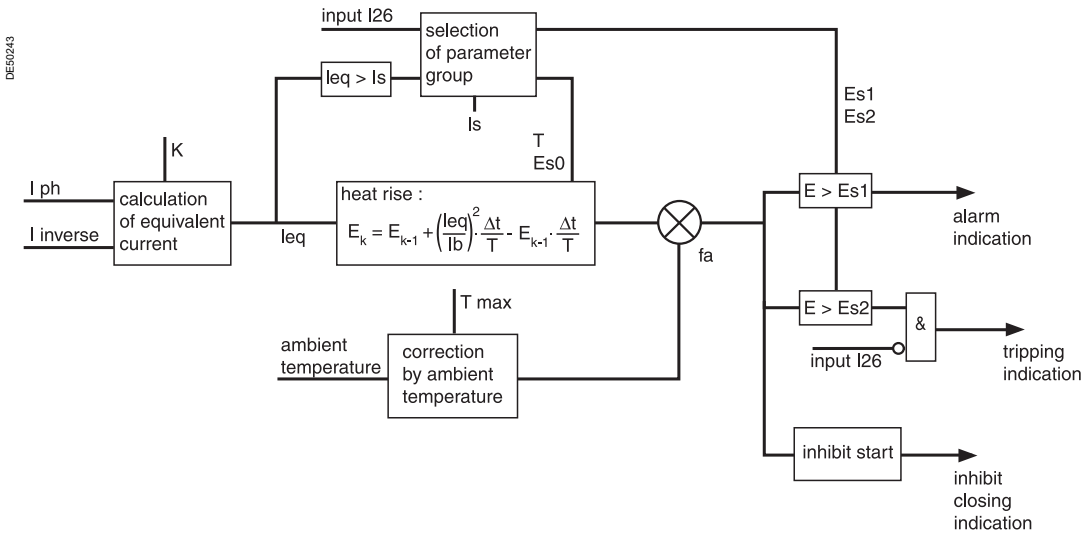

Thermal overload
ANSI code 49RMS
Setting examples

Example 1

The following data are available:

- time constants for on operation T1 and off operation T2:
  - T1 = 25 min
  - T2 = 70 min
- maximum curve in steady state: Imax/Ib = 1.05.

Setting of tripping set point Es2

Es2 = $(Imax/Ib)^2$ = 110 %

Note: *If the motor absorbs a current of 1.05 Ib in steady state, the heat rise calculated by the thermal overload protection will reach 110 %.*

Setting of alarm set point Es1

Es1 = 90 % (I/Ib = 0.95).

Knegative: 4.5 (usual value)

The other thermal overload parameters do not need to be set. They are not taken into account by default.

Example 2

The following data are available:

- motor thermal resistance in the form of hot and cold curves (see solid line curves in Figure 1)
- cooling time constant T2
- maximum steady state current: Imax/Ib = 1.05.

Setting of tripping set point Es2

Es2 = $(Imax/Ib)^2$ = 110 %

Setting of alarm set point Es1:

Es1 = 90 % (I/Ib = 0.95).

The manufacturer's hot/cold curves (1) may be used to determine the heating time constant T1.

The approach consists of placing the Sepam hot/cold curves below the motor curves.

Figure 1: motor thermal resistance and thermal overload tripping curves

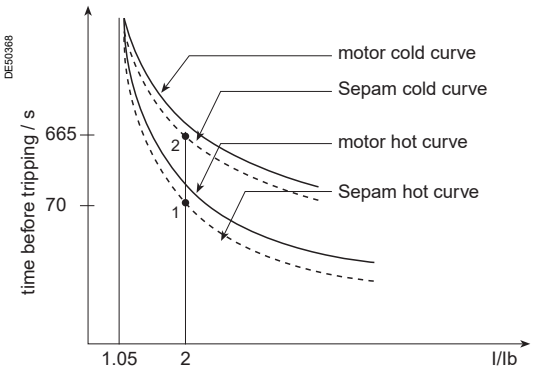

For an overload of 2 Ib, the value t/T1 = 0.0339 (2) is obtained.

In order for Sepam to trip at the point 1 (t = 70 s), T1 is equal to 2065 sec ≈ 34 min.

With a setting of T1 = 34 min, the tripping time is obtained based on a cold state (point 2). In this case, it is equal to t/T1 = 0.3216 ⇒ t ⇒ 665 sec, i.e. ≈ 11 min, which is compatible with the thermal resistance of the motor when cold.

The negative sequence factor is calculated using the equation defined on page 45.

The parameters of the second thermal overload relay do not need to be set.

They are not taken into account by default.

Example 3

The following data are available:

- motor thermal resistance in the form of hot and cold curves (see solid line curves in Figure 1),
- cooling time constant T2
- maximum steady state current: Imax/Ib = 1.1.

Setting of tripping set point Es2

Es2 = $(Imax/Ib)^2$ = 120 %

Setting of alarm set point Es1

Es1 = 90 % (I/Ib = 0.95).

The time constant T1 is calculated so that the thermal overload protection trips after 100 s (point 1).

With t/T1 = 0.069 (I/Ib = 2 and Es2 = 120 %):

⇒ T1 = 100 s / 0.069 = 1449 sec ≈ 24 min.

The tripping time starting from the cold state is equal to:

t/T1 = 0.3567 ⇒ t = 24 min 0.3567 = 513 s (point 2').

This tripping time is too long since the limit for this overload current is 400 s (point 2).

If the time constant T1 is lowered, the thermal overload protection will trip earlier, below point 2.

There risk that motor starting when hot will not be possible also exists in this case (see Figure 2 in which a lower Sepam hot curve would intersect the starting curve with U = 0.9 Un).

The **Es0 parameter** is a setting that is used to solve these differences by lowering the Sepam cold curve without moving the hot curve.

In this example, the thermal overload protection should trip after 400 s starting from the cold state.

The following equation is used to obtain the Es0 value:

$$Es0 = \left[\frac{I_{processed}}{I_b}\right]^2 - e^{\frac{t_{necessary}}{T_1}} \cdot \left[\left[\frac{I_{processed}}{I_b}\right]^2 - Es2\right]$$

with:

$t_{necessary}$: tripping time necessary starting from a cold state.

$I_{processed}$: equipment current.

(1) *When the machine manufacturer provides both a time constant T1 and the machine hot/cold curves, the use of the curves is recommended since they are more accurate.*

(2) *The charts containing the numerical values of the Sepam **hot curve** may be used, or else the equation of the curve which is given on page 45.*

In numerical values, the following is obtained:

$$Es0 = 4 - e^{\frac{400\ sec}{24 * 60 sec}} = 0.3035 \approx 31\%$$

By setting Es0 = 31 %, point 2' is moved downward to obtain a shorter tripping time that is compatible with the motor's thermal resistance when cold (see Figure 3).

Note: *A setting Es0 = 100 % therefore means that the hot and cold curves are the same.*

Figure 2: hot/cold curves not compatible with the motor's thermal resistance

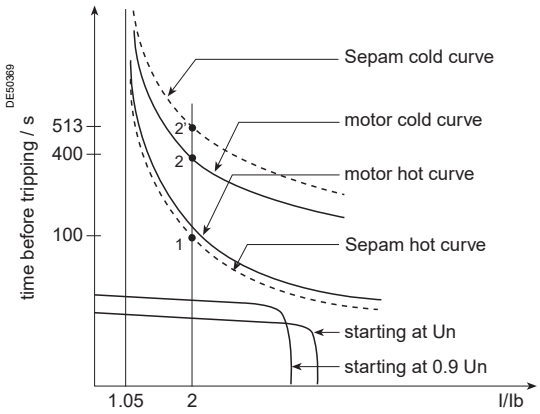

Figure 3: hot/cold curves compatible with the motor's thermal resistance via the setting of an initial heat rise Es0

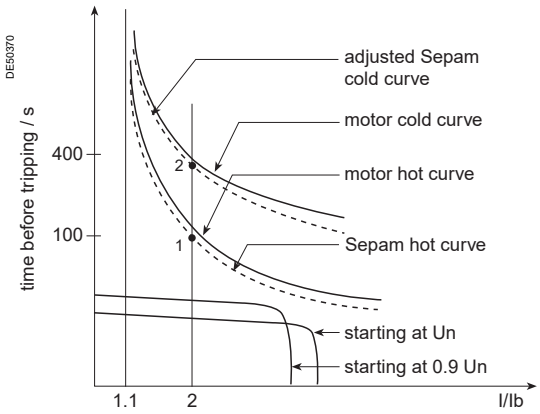

Use of the additional setting group

When a motor rotor is locked or is turning very slowly, its thermal behavior is different from that with the rated load. In such conditions, the motor is damaged by overheating of the rotor or stator. For high power motors, rotor overheating is most often a limiting factor.

The thermal overload parameters chosen for operation with a low overload are no longer valid.

In order to protect the motor in this case, "excessive starting time" protection may be used.

Nevertheless, motor manufacturers provide the thermal resistance curves when the rotor is locked, for different voltages at the time of starting.

Figure 4: Locked rotor thermal resistance

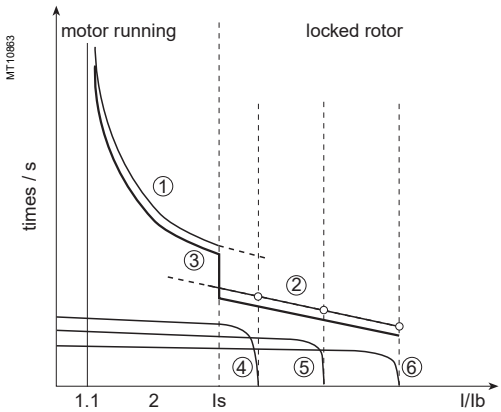

①: thermal resistance, motor running
②: thermal resistance, motor stopped
③: Sepam tripping curve
④: starting at 65 % Un
⑤: starting at 80 % Un
⑥: starting at 100 % Un

In order to take these curves into account, the second thermal overload relay may be used.

The time constant in this case is, in theory, the shortest one: however, it should not be determined in the same way as that of the first relay.

The thermal overload protection switches between the first and second relay if the equivalent current Ieq exceeds the Is value (set point current).

Cold curves for Es0 = 0 %

I/Ib Es (%)	1.00	1.05	1.10	1.15	1.20	1.25	1.30	1.35	1.40	1.45	1.50	1.55	1.60	1.65	1.70	1.75	1.80
50	0.6931	0.6042	0.5331	0.4749	0.4265	0.3857	0.3508	0.3207	0.2945	0.2716	0.2513	0.2333	0.2173	0.2029	0.1900	0.1782	0.1676
55	0.7985	0.6909	0.6061	0.5376	0.4812	0.4339	0.3937	0.3592	0.3294	0.3033	0.2803	0.2600	0.2419	0.2257	0.2111	0.1980	0.1860
60	0.9163	0.7857	0.6849	0.6046	0.5390	0.4845	0.4386	0.3993	0.3655	0.3360	0.3102	0.2873	0.2671	0.2490	0.2327	0.2181	0.2048
65	1.0498	0.8905	0.7704	0.6763	0.6004	0.5379	0.4855	0.4411	0.4029	0.3698	0.3409	0.3155	0.2929	0.2728	0.2548	0.2386	0.2239
70	1.2040	1.0076	0.8640	0.7535	0.6657	0.5942	0.5348	0.4847	0.4418	0.4049	0.3727	0.3444	0.3194	0.2972	0.2774	0.2595	0.2434
75	1.3863	1.1403	0.9671	0.8373	0.7357	0.6539	0.5866	0.5302	0.4823	0.4412	0.4055	0.3742	0.3467	0.3222	0.3005	0.2809	0.2633
80	1.6094	1.2933	1.0822	0.9287	0.8109	0.7174	0.6413	0.5780	0.5245	0.4788	0.4394	0.4049	0.3747	0.3479	0.3241	0.3028	0.2836
85	1.8971	1.4739	1.2123	1.0292	0.8923	0.7853	0.6991	0.6281	0.5686	0.5180	0.4745	0.4366	0.4035	0.3743	0.3483	0.3251	0.3043
90	2.3026	1.6946	1.3618	1.1411	0.9808	0.8580	0.7605	0.6809	0.6147	0.5587	0.5108	0.4694	0.4332	0.4013	0.3731	0.3480	0.3254
95		1.9782	1.5377	1.2670	1.0780	0,9365	0.8258	0.7366	0.6630	0.6012	0.5486	0.5032	0.4638	0.4292	0.3986	0.3714	0.3470
100		2.3755	1.7513	1.4112	1.1856	1.0217	0.8958	0.7956	0.7138	0.6455	0.5878	0.5383	0.4953	0.4578	0.4247	0.3953	0.3691
105		3.0445	2.0232	1.5796	1.3063	1.1147	0.9710	0.8583	0.7673	0.6920	0.6286	0.5746	0.5279	0,4872	0,4515	0,4199	0,3917
110			2.3979	1.7824	1.4435	1.2174	1.0524	0.9252	0.8238	0.7406	0.6712	0.6122	0.5616	0.5176	0.4790	0.4450	0.4148
115			3.0040	2.0369	1.6025	1.3318	1.1409	0,9970	0.8837	0.7918	0.7156	0.6514	0.5964	0.5489	0.5074	0.4708	0.4384
120				2.3792	1.7918	1.4610	1.2381	1.0742	0.9474	0.8457	0.7621	0.6921	0.6325	0.5812	0.5365	0.4973	0.4626
125				2.9037	2.0254	1.6094	1.3457	1.1580	1.0154	0.9027	0.8109	0.7346	0.6700	0.6146	0.5666	0.5245	0.4874
130					2.3308	1.7838	1.4663	1.2493	1.0885	0.9632	0.8622	0.7789	0.7089	0.6491	0.5975	0.5525	0.5129
135					2.7726	1.9951	1.6035	1.3499	1.1672	1.0275	0.9163	0.8253	0.7494	0.6849	0.6295	0.5813	0.5390
140						2.2634	1.7626	1.4618	1.2528	1.0962	0.9734	0.8740	0.7916	0.7220	0.6625	0.6109	0.5658
145						2.6311	1.9518	1.5877	1.3463	1.1701	1.0341	0.9252	0.8356	0.7606	0.6966	0.6414	0.5934
150						3.2189	2.1855	1.7319	1.4495	1.2498	1.0986	0.9791	0.8817	0.8007	0.7320	0.6729	0.6217
155							2.4908	1.9003	1.5645	1.3364	1.1676	1.0361	0.9301	0.8424	0.7686	0.7055	0.6508
160							2.9327	2.1030	1.6946	1.4313	1.2417	1.0965	0.9808	0.8860	0.8066	0.7391	0.6809
165								2.3576	1.8441	1.5361	1.3218	1.1609	1.0343	0.9316	0.8461	0.7739	0.7118
170								2.6999	2.0200	1.6532	1.4088	1.2296	1.0908	0.9793	0.8873	0.8099	0.7438
175								3.2244	2.2336	1.7858	1.5041	1.3035	1.1507	1.0294	0.9302	0.8473	0.7768
180									2.5055	1.9388	1.6094	1.3832	1.2144	1.0822	0.9751	0.8861	0.8109
185									2.8802	2.1195	1.7272	1.4698	1.2825	1.1379	1.0220	0.9265	0.8463
190									3.4864	2.3401	1.8608	1.5647	1.3555	1.1970	1.0713	0.9687	0.8829
195										2.6237	2.0149	1.6695	1.4343	1.2597	1.1231	1.0126	0.9209
200										3.0210	2.1972	1.7866	1.5198	1.3266	1.1778	1.0586	0.9605

Cold curves for Es0 = 0 %

I/Ib Es (%)	1.85	1.90	1.95	2.00	2.20	2.40	2.60	2.80	3.00	3.20	3.40	3.60	3.80	4.00	4.20	4.40	4.60
50	0.1579	0.1491	0.1410	0.1335	0.1090	0.0908	0.0768	0.0659	0.0572	0.0501	0.0442	0.0393	0.0352	0.0317	0.0288	0.0262	0.0239
55	0.1752	0.1653	0.1562	0.1479	0.1206	0.1004	0.0849	0.0727	0.0631	0.0552	0.0487	0.0434	0.0388	0.0350	0.0317	0.0288	0.0263
60	0.1927	0.1818	0.1717	0.1625	0.1324	0.1100	0.0929	0.0796	0.069	0.0604	0.0533	0.0474	0.0424	0.0382	0.0346	0.0315	0.0288
65	0.2106	0.1985	0.1875	0.1773	0.1442	0.1197	0.1011	0.0865	0.075	0.0656	0.0579	0.0515	0.0461	0.0415	0.0375	0.0342	0.0312
70	0.2288	0.2156	0.2035	0.1924	0.1562	0.1296	0.1093	0.0935	0.081	0.0708	0.0625	0.0555	0.0497	0.0447	0.0405	0.0368	0.0336
75	0.2474	0.2329	0.2197	0.2076	0.1684	0.1395	0.1176	0.1006	0.087	0.0761	0.0671	0.0596	0.0533	0.0480	0.0434	0.0395	0.0361
80	0.2662	0.2505	0.2362	0.2231	0.1807	0.1495	0.1260	0.1076	0.0931	0.0813	0.0717	0.0637	0.0570	0.0513	0.0464	0.0422	0.0385
85	0.2855	0.2685	0.2530	0.2389	0.1931	0.1597	0.1344	0.1148	0.0992	0.0867	0.0764	0.0678	0.0607	0.0546	0.0494	0.0449	0.0410
90	0.3051	0.2868	0.2701	0.2549	0.2057	0.1699	0.1429	0.1219	0.1054	0.092	0.0811	0.0720	0.0644	0.0579	0.0524	0.0476	0.0435
95	0.3251	0.3054	0.2875	0.2712	0.2185	0.1802	0.1514	0.1292	0.1116	0.0974	0.0858	0.0761	0.0681	0.0612	0.0554	0.0503	0.0459
100	0.3456	0.3244	0.3051	0.2877	0.2314	0.1907	0.1601	0.1365	0.1178	0.1028	0.0905	0.0803	0.0718	0.0645	0.0584	0.0530	0.0484
105	0.3664	0.3437	0.3231	0.3045	0.2445	0.2012	0.1688	0.1438	0.1241	0.1082	0.0952	0.0845	0.0755	0.0679	0.0614	0.0558	0.0509
110	0.3877	0.3634	0.3415	0.3216	0.2578	0.2119	0.1776	0.1512	0.1304	0.1136	0.1000	0.0887	0.0792	0.0712	0.0644	0.0585	0.0534
115	0.4095	0.3835	0.3602	0.3390	0.2713	0.2227	0.1865	0.1586	0.1367	0.1191	0.1048	0.0929	0.0830	0.0746	0.0674	0.0612	0.0559
120	0.4317	0.4041	0.3792	0.3567	0.2849	0.2336	0.1954	0.1661	0.1431	0.1246	0.1096	0.0972	0.0868	0.0780	0.0705	0.0640	0.0584
125	0.4545	0.4250	0.3986	0.3747	0.2988	0.2446	0.2045	0.1737	0.1495	0.1302	0.1144	0.1014	0.0905	0.0813	0.0735	0.0667	0.0609
130	0.4778	0.4465	0.4184	0.3930	0.3128	0.2558	0.2136	0.1813	0.156	0.1358	0.1193	0.1057	0.0943	0.0847	0.0766	0.0695	0.0634
135	0.5016	0.4683	0.4386	0.4117	0.3270	0.2671	0.2228	0.1890	0.1625	0.1414	0.1242	0.1100	0.0982	0.0881	0.0796	0.0723	0.0659
140	0.5260	0.4907	0.4591	0.4308	0.3414	0.2785	0.2321	0.1967	0.1691	0.147	0.1291	0.1143	0.1020	0.0916	0.0827	0.0751	0.0685
145	0.5511	0.5136	0.4802	0.4502	0.3561	0.2900	0.2414	0.2045	0.1757	0.1527	0.1340	0.1187	0.1058	0.0950	0.0858	0.0778	0.0710
150	0.5767	0.5370	0.5017	0.4700	0.3709	0.3017	0.2509	0.2124	0.1823	0.1584	0.1390	0.1230	0.1097	0.0984	0.0889	0.0806	0.0735
155	0.6031	0.5610	0.5236	0.4902	0.3860	0.3135	0.2604	0.2203	0.189	0.1641	0.1440	0.1274	0.1136	0.1019	0.0920	0.0834	0.0761
160	0.6302	0.5856	0.5461	0.5108	0.4013	0.3254	0.2701	0.2283	0.1957	0.1699	0.1490	0.1318	0.1174	0.1054	0.0951	0.0863	0.0786
165	0.6580	0.6108	0.5690	0.5319	0.4169	0.3375	0.2798	0.2363	0.2025	0.1757	0.1540	0.1362	0.1213	0.1088	0.0982	0.0891	0.0812
170	0.6866	0.6366	0.5925	0.5534	0.4327	0.3498	0.2897	0.2444	0.2094	0.1815	0.1591	0.1406	0.1253	0.1123	0.1013	0.0919	0.0838
175	0.7161	0.6631	0.6166	0.5754	0.4487	0.3621	0.2996	0.2526	0.2162	0.1874	0.1641	0.1451	0.1292	0.1158	0.1045	0.0947	0.0863
180	0.7464	0.6904	0.6413	0.5978	0.4651	0.3747	0.3096	0.2608	0.2231	0.1933	0.1693	0.1495	0.1331	0.1193	0.1076	0.0976	0.0889
185	0.7777	0.7184	0.6665	0.6208	0.4816	0.3874	0.3197	0.2691	0.2301	0.1993	0.1744	0.1540	0.1371	0.1229	0.1108	0.1004	0.0915
190	0.8100	0.7472	0.6925	0.6444	0.4985	0.4003	0.3300	0.2775	0.2371	0.2052	0.1796	0.1585	0.1411	0.1264	0.1140	0.1033	0.0941
195	0.8434	0.7769	0.7191	0.6685	0.5157	0.4133	0.3403	0.2860	0.2442	0.2113	0.1847	0.1631	0.1451	0.1300	0.1171	0.1062	0.0967
200	0.8780	0.8075	0.7465	0.6931	0.5331	0.4265	0.3508	0.2945	0.2513	0.2173	0.1900	0.1676	0.1491	0.1335	0.1203	0.1090	0.0993

Cold curves for Es0 = 0 %

I/Ib Es (%)	4.80	5.00	5.50	6.00	6.50	7.00	7.50	8.00	8.50	9.00	9.50	10.00	12.50	15.00	17.50	20.00
50	0.0219	0.0202	0.0167	0.0140	0.0119	0.0103	0.0089	0.0078	0.0069	0.0062	0.0056	0.0050	0.0032	0.0022	0.0016	0.0013
55	0.0242	0.0222	0.0183	0.0154	0.0131	0.0113	0.0098	0.0086	0.0076	0.0068	0.0061	0.0055	0.0035	0.0024	0.0018	0.0014
60	0.0264	0.0243	0.0200	0.0168	0.0143	0.0123	0.0107	0.0094	0.0083	0.0074	0.0067	0.0060	0.0038	0.0027	0.0020	0.0015
65	0.0286	0.0263	0.0217	0.0182	0.0155	0.0134	0.0116	0.0102	0.0090	0.0081	0.0072	0.0065	0.0042	0.0029	0.0021	0.0016
70	0.0309	0.0284	0.0234	0.0196	0.0167	0.0144	0.0125	0.0110	0.0097	0.0087	0.0078	0.0070	0.0045	0.0031	0.0023	0.0018
75	0.0331	0.0305	0.0251	0.0211	0.0179	0.0154	0.0134	0.0118	0.0104	0.0093	0.0083	0.0075	0.0048	0.0033	0.0025	0.0019
80	0.0353	0.0325	0.0268	0.0225	0.0191	0.0165	0.0143	0.0126	0.0111	0.0099	0.0089	0.0080	0.0051	0.0036	0.0026	0.0020
85	0.0376	0.0346	0.0285	0.0239	0.0203	0.0175	0.0152	0.0134	0.0118	0.0105	0.0095	0.0085	0.0055	0.0038	0.0028	0.0021
90	0.0398	0.0367	0.0302	0.0253	0.0215	0.0185	0.0161	0.0142	0.0125	0.0112	0.0100	0.0090	0.0058	0.0040	0.0029	0.0023
95	0.0421	0.0387	0.0319	0.0267	0.0227	0.0196	0.0170	0.0150	0.0132	0.0118	0.0106	0.0095	0.0061	0.0042	0.0031	0.0024
100	0.0444	0.0408	0.0336	0.0282	0.0240	0.0206	0.0179	0.0157	0.0139	0.0124	0.0111	0.0101	0.0064	0.0045	0.0033	0.0025
105	0.0466	0.0429	0.0353	0.0296	0.0252	0.0217	0.0188	0.0165	0.0146	0.0130	0.0117	0.0106	0.0067	0.0047	0.0034	0.0026
110	0.0489	0.0450	0.0370	0.0310	0.0264	0.0227	0.0197	0.0173	0.0153	0.0137	0.0123	0.0111	0.0071	0.0049	0.0036	0.0028
115	0.0512	0.0471	0.0388	0.0325	0.0276	0.0237	0.0207	0.0181	0.0160	0.0143	0.0128	0.0116	0.0074	0.0051	0.0038	0.0029
120	0.0535	0.0492	0.0405	0.0339	0.0288	0.0248	0.0216	0.0189	0.0167	0.0149	0.0134	0.0121	0.0077	0.0053	0.0039	0.0030
125	0.0558	0.0513	0.0422	0.0353	0.0300	0.0258	0.0225	0.0197	0.0175	0.0156	0.0139	0.0126	0.0080	0.0056	0.0041	0.0031
130	0.0581	0.0534	0.0439	0.0368	0.0313	0.0269	0.0234	0.0205	0.0182	0.0162	0.0145	0.0131	0.0084	0.0058	0.0043	0.0033
135	0.0604	0.0555	0.0457	0.0382	0.0325	0.0279	0.0243	0.0213	0.0189	0.0168	0.0151	0.0136	0.0087	0.0060	0.0044	0.0034
140	0.0627	0.0576	0.0474	0.0397	0.0337	0.0290	0.0252	0.0221	0.0196	0.0174	0.0156	0.0141	0.0090	0.0062	0.0046	0.0035
145	0.0650	0.0598	0.0491	0.0411	0.0349	0.0300	0.0261	0.0229	0.0203	0.0181	0.0162	0.0146	0.0093	0.0065	0.0047	0.0036
150	0.0673	0.0619	0.0509	0.0426	0.0361	0.0311	0.0270	0.0237	0.0210	0.0187	0.0168	0.0151	0.0096	0.0067	0.0049	0.0038
155	0.0696	0.0640	0.0526	0.0440	0.0374	0.0321	0.0279	0.0245	0.0217	0.0193	0.0173	0.0156	0.0100	0.0069	0.0051	0.0039
160	0.0720	0.0661	0.0543	0.0455	0.0386	0.0332	0.0289	0.0253	0.0224	0.0200	0.0179	0.0161	0.0103	0.0071	0.0052	0.0040
165	0.0743	0.0683	0.0561	0.0469	0.0398	0.0343	0.0298	0.0261	0.0231	0.0206	0.0185	0.0166	0.0106	0.0074	0.0054	0.0041
170	0.0766	0.0704	0.0578	0.0484	0.0411	0.0353	0.0307	0.0269	0.0238	0.0212	0.0190	0.0171	0.0109	0.0076	0.0056	0.0043
175	0.0790	0.0726	0.0596	0.0498	0.0423	0.0364	0.0316	0.0277	0.0245	0.0218	0.0196	0.0177	0.0113	0.0078	0.0057	0.0044
180	0.0813	0.0747	0.0613	0.0513	0.0435	0.0374	0.0325	0.0285	0.0252	0.0225	0.0201	0.0182	0.0116	0.0080	0.0059	0.0045
185	0.0837	0.0769	0.0631	0.0528	0.0448	0.0385	0.0334	0.0293	0.0259	0.0231	0.0207	0.0187	0.0119	0.0083	0.0061	0.0046
190	0.0861	0.0790	0.0649	0.0542	0.0460	0.0395	0.0344	0.0301	0.0266	0.0237	0.0213	0.0192	0.0122	0.0085	0.0062	0.0048
195	0.0884	0.0812	0.0666	0.0557	0.0473	0.0406	0.0353	0.0309	0.0274	0.0244	0.0218	0.0197	0.0126	0.0087	0.0064	0.0049
200	0.0908	0.0834	0.0684	0.0572	0.0485	0.0417	0.0362	0.0317	0.0281	0.0250	0.0224	0.0202	0.0129	0.0089	0.0066	0.0050

Hot curves

I/Ib Es (%)	1.00	1.05	1.10	1.15	1.20	1.25	1.30	1.35	1.40	1.45	1.50	1.55	1.60	1.65	1.70	1.75	1.80
105		0.6690	0.2719	0.1685	0.1206	0.0931	0.0752	0.0627	0.0535	0.0464	0.0408	0.0363	0.0326	0.0295	0.0268	0.0245	0.0226
110		3.7136	0.6466	0.3712	0.2578	0.1957	0.1566	0.1296	0.1100	0.0951	0.0834	0.0740	0.0662	0.0598	0.0544	0.0497	0.0457
115			1.2528	0.6257	0.4169	0.3102	0.2451	0.2013	0.1699	0.1462	0.1278	0.1131	0.1011	0.0911	0.0827	0.0755	0.0693
120			3.0445	0.9680	0.6061	0.4394	0.3423	0.2786	0.2336	0.2002	0.1744	0.1539	0.1372	0.1234	0.1118	0.1020	0.0935
125				1.4925	0.8398	0.5878	0.4499	0.3623	0.3017	0.2572	0.2231	0.1963	0.1747	0.1568	0.1419	0.1292	0.1183
130				2.6626	1.1451	0.7621	0.5705	0.4537	0.3747	0.3176	0.2744	0.2407	0.2136	0.1914	0.1728	0.1572	0.1438
135					1.5870	0.9734	0.7077	0.5543	0.4535	0.3819	0.3285	0.2871	0.2541	0.2271	0.2048	0.1860	0.1699
140					2.3979	1.2417	0.8668	0.6662	0.5390	0.4507	0.3857	0.3358	0.2963	0.2643	0.2378	0.2156	0.1967
145						1.6094	1.0561	0.7921	0.6325	0.5245	0.4463	0.3869	0.3403	0.3028	0.2719	0.2461	0.2243
150						2.1972	1.2897	0.9362	0.7357	0.6042	0.5108	0.4408	0.3864	0.3429	0.3073	0.2776	0.2526
155						3.8067	1.5950	1.1047	0.8508	0.6909	0.5798	0.4978	0.4347	0.3846	0.3439	0.3102	0.2817
160							2.0369	1.3074	0.9808	0.7857	0.6539	0.5583	0.4855	0.4282	0.3819	0.3438	0.3118
165							2.8478	1.5620	1.1304	0.8905	0.7340	0.6226	0.5390	0.4738	0.4215	0.3786	0.3427
170								1.9042	1.3063	1.0076	0.8210	0.6914	0.5955	0.5215	0.4626	0.4146	0.3747
175								2.4288	1.5198	1.1403	0.9163	0.7652	0.6554	0.5717	0.5055	0.4520	0.4077
180								3.5988	1.7918	1.2933	1.0217	0.8449	0.7191	0.6244	0.5504	0.4908	0.4418
185									2.1665	1.4739	1.1394	0.9316	0.7872	0.6802	0.5974	0.5312	0.4772
190									2.7726	1.6946	1.2730	1.0264	0.8602	0.7392	0.6466	0.5733	0.5138
195									4.5643	1.9782	1.4271	1.1312	0.9390	0.8019	0.6985	0.6173	0.5518
200										2.3755	1.6094	1.2483	1.0245	0.8688	0.7531	0.6633	0.5914

I/Ib Es (%)	1.85	1.90	1.95	2.00	2.20	2.40	2.60	2.80	3.00	3,20	3,40	3.60	3.80	4.00	4.20	4.40	4.60
105	0.0209	0.0193	0.0180	0.0168	0.0131	0.0106	0.0087	0.0073	0.0063	0.0054	0.0047	0.0042	0.0037	0.0033	0.0030	0.0027	0.0025
110	0.0422	0.0391	0.0363	0.0339	0.0264	0.0212	0.0175	0.0147	0.0126	0.0109	0.0095	0.0084	0.0075	0.0067	0.0060	0.0055	0.0050
115	0.0639	0.0592	0.0550	0.0513	0.0398	0.0320	0.0264	0.0222	0.0189	0.0164	0.0143	0.0126	0.0112	0.0101	0.0091	0.0082	0.0075
120	0.0862	0.0797	0.0740	0.0690	0.0535	0.0429	0.0353	0.0297	0.0253	0.0219	0.0191	0.0169	0.0150	0.0134	0.0121	0.0110	0.0100
125	0.1089	0.1007	0.0934	0.0870	0.0673	0.0540	0.0444	0.0372	0.0317	0.0274	0.0240	0.0211	0.0188	0.0168	0.0151	0.0137	0.0125
130	0.1322	0.1221	0.1132	0.1054	0.0813	0.0651	0.0535	0.0449	0.0382	0.0330	0.0288	0.0254	0.0226	0.0202	0.0182	0.0165	0.0150
135	0.1560	0.1440	0.1334	0.1241	0.0956	0.0764	0.0627	0.0525	0.0447	0.0386	0.0337	0.0297	0.0264	0.0236	0.0213	0.0192	0.0175
140	0.1805	0.1664	0.1540	0.1431	0.1100	0.0878	0.0720	0.0603	0.0513	0.0443	0.0386	0.0340	0.0302	0.0270	0.0243	0.0220	0.0200
145	0.2055	0.1892	0.1750	0.1625	0.1246	0.0993	0.0813	0.0681	0.0579	0.0499	0.0435	0.0384	0.0341	0.0305	0.0274	0.0248	0.0226
150	0.2312	0.2127	0.1965	0.1823	0.1395	0.1110	0.0908	0.0759	0.0645	0.0556	0.0485	0.0427	0.0379	0.0339	0.0305	0.0276	0.0251
155	0.2575	0.2366	0.2185	0.2025	0.1546	0.1228	0.1004	0.0838	0.0712	0.0614	0.0535	0.0471	0.0418	0.0374	0.0336	0.0304	0.0277
160	0.2846	0.2612	0.2409	0.2231	0.1699	0.1347	0.1100	0.0918	0.0780	0.0671	0.0585	0.0515	0.0457	0.0408	0.0367	0.0332	0.0302
165	0.3124	0.2864	0.2639	0.2442	0.1855	0.1468	0.1197	0.0999	0.0847	0.0729	0.0635	0.0559	0.0496	0.0443	0.0398	0.0360	0.0328
170	0.3410	0.3122	0.2874	0.2657	0.2012	0.1591	0.1296	0.1080	0.0916	0.0788	0.0686	0.0603	0.0535	0.0478	0.0430	0.0389	0.0353
175	0.3705	0.3388	0.3115	0.2877	0.2173	0.1715	0.1395	0.1161	0.0984	0.0847	0.0737	0.0648	0.0574	0.0513	0.0461	0.0417	0.0379
180	0.4008	0.3660	0.3361	0.3102	0.2336	0.1840	0.1495	0.1244	0.1054	0.0906	0.0788	0.0692	0.0614	0.0548	0.0493	0.0446	0.0405
185	0.4321	0.3940	0.3614	0.3331	0.2502	0.1967	0.1597	0.1327	0.1123	0.0965	0.0839	0.0737	0.0653	0.0583	0.0524	0.0474	0.0431
190	0.4644	0.4229	0.3873	0.3567	0.2671	0.2096	0.1699	0.1411	0.1193	0.1025	0.0891	0.0782	0.0693	0.0619	0.0556	0.0503	0.0457
195	0.4978	0.4525	0.4140	0.3808	0.2842	0.2226	0.1802	0.1495	0.1264	0.1085	0.0943	0.0828	0.0733	0.0654	0.0588	0.0531	0.0483
200	0.5324	0.4831	0.4413	0.4055	0.3017	0.2358	0.1907	0.1581	0.1335	0.1145	0.0995	0.0873	0.0773	0.0690	0.0620	0.0560	0.0509

Hot curves

I/Ib Es (%)	4.80	5.00	5.50	6.00	6.50	7.00	7.50	8.00	8.50	9.00	9.50	10.00	12.50	15.00	17.50	20.00
105	0.0023	0.0021	0.0017	0.0014	0.0012	0.0010	0.0009	0.0008	0.0007	0.0006	0.0006	0.0005	0.0003	0.0002	0.0002	0.0001
110	0.0045	0.0042	0.0034	0.0029	0.0024	0.0021	0.0018	0.0016	0.0014	0.0013	0.0011	0.0010	0.0006	0.0004	0.0003	0.0003
115	0.0068	0.0063	0.0051	0.0043	0.0036	0.0031	0.0027	0.0024	0.0021	0.0019	0.0017	0.0015	0.0010	0.0007	0.0005	0.0004
120	0.0091	0.0084	0.0069	0.0057	0.0049	0.0042	0.0036	0.0032	0.0028	0.0025	0.0022	0.0020	0.0013	0.0009	0.0007	0.0005
125	0.0114	0.0105	0.0086	0.0072	0.0061	0.0052	0.0045	0.0040	0.0035	0.0031	0.0028	0.0025	0.0016	0.0011	0.0008	0.0006
130	0.0137	0.0126	0.0103	0.0086	0.0073	0.0063	0.0054	0.0048	0.0042	0.0038	0.0034	0.0030	0.0019	0.0013	0.0010	0.0008
135	0.0160	0.0147	0.0120	0.0101	0.0085	0.0073	0.0064	0.0056	0.0049	0.0044	0.0039	0.0035	0.0023	0.0016	0.0011	0.0009
140	0.0183	0.0168	0.0138	0.0115	0.0097	0.0084	0.0073	0.0064	0.0056	0.0050	0.0045	0.0040	0.0026	0.0018	0.0013	0.0010
145	0.0206	0.0189	0.0155	0.0129	0.0110	0.0094	0.0082	0.0072	0.0063	0.0056	0.0051	0.0046	0.0029	0.0020	0.0015	0.0011
150	0.0229	0.0211	0.0172	0.0144	0.0122	0.0105	0.0091	0.0080	0.0070	0.0063	0.0056	0.0051	0.0032	0.0022	0.0016	0.0013
155	0.0253	0.0232	0.0190	0.0158	0.0134	0.0115	0.0100	0.0088	0.0077	0.0069	0.0062	0.0056	0.0035	0.0025	0.0018	0.0014
160	0.0276	0.0253	0.0207	0.0173	0.0147	0.0126	0.0109	0.0096	0.0085	0.0075	0.0067	0.0061	0.0039	0.0027	0.0020	0.0015
165	0.0299	0.0275	0.0225	0.0187	0.0159	0.0136	0.0118	0.0104	0.0092	0.0082	0.0073	0.0066	0.0042	0.0029	0.0021	0.0016
170	0.0323	0.0296	0.0242	0.0202	0.0171	0.0147	0.0128	0.0112	0.0099	0.0088	0.0079	0.0071	0.0045	0.0031	0.0023	0.0018
175	0.0346	0.0317	0.0260	0.0217	0.0183	0.0157	0.0137	0.0120	0.0106	0.0094	0.0084	0.0076	0.0048	0.0034	0.0025	0.0019
180	0.0370	0.0339	0.0277	0.0231	0.0196	0.0168	0.0146	0.0128	0.0113	0.0101	0.0090	0.0081	0.0052	0.0036	0.0026	0.0020
185	0.0393	0.0361	0.0295	0.0246	0.0208	0.0179	0.0155	0.0136	0.0120	0.0107	0.0096	0.0086	0.0055	0.0038	0.0028	0.0021
190	0.0417	0.0382	0.0313	0.0261	0.0221	0.0189	0.0164	0.0144	0.0127	0.0113	0.0101	0.0091	0.0058	0.0040	0.0030	0.0023
195	0.0441	0.0404	0.0330	0.0275	0.0233	0.0200	0.0173	0.0152	0.0134	0.0119	0.0107	0.0096	0.0061	0.0043	0.0031	0.0024
200	0.0464	0.0426	0.0348	0.0290	0.0245	0.0211	0.0183	0.0160	0.0141	0.0126	0.0113	0.0102	0.0065	0.0045	0.0033	0.0025

Phase overcurrent
ANSI code 50/51

Description

The phase overcurrent function comprises
4 independent elements divided into two groups of 2 settings called Group A and Group B respectively.
The use of the two elements may be chosen by by parameter setting:
■ operation with Group A and Group B exclusively, with switching from one group to the other dependent on the state of logic input I13 exclusively, or by remote control (TC3, TC4)
□ I13 = 0 group A
□ I13 = 1 group B
■ operation with Group A and Group B active for 4-set point operation
Enabling/disabling is performed by group of 2 elements (A, B).

Operation

Phase overcurrent protection is three-phase.
It picks up if one, two or three phase currents reach the operation set point.
It includes a time delay, which is either definite (constant, **DT**) or IDMT depending on the curves on the facing page.
The protection incorporates a harmonic 2 restraint set point which can be used to set the protection Is set point close to the CT rated current, including when a transformer closes.
This restraint can be activated by parameter setting.
Harmonic 2 restraint is valid as long as the current is less than half the minimum short-circuit current Isc of the network downstream of the protection.

Definite time protection functions
Is is the operation set point expressed in Amps, and T is the protection operation time delay.

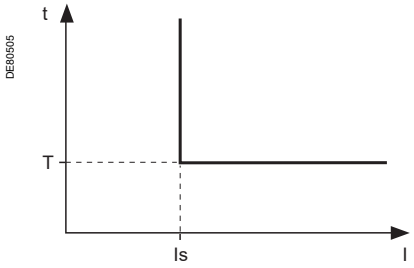

Definite time protection principle.

IDMT protection

IDMT protection operates in accordance with the IEC 60255-3, BS 142 and IEEE C-37112 standards.

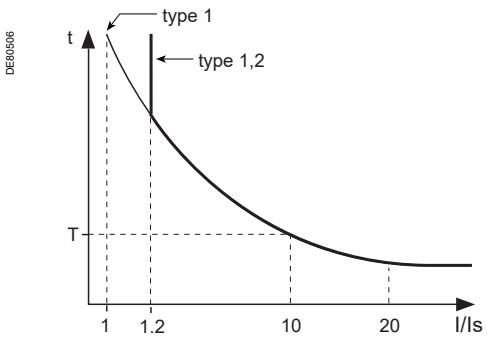

IDMT protection principle.

The Is setting corresponds to the vertical asymptote of the curve, and T is the operation time delay for 10 Is.
The tripping time for I/Is values less than 1.2 depends on the type of curve chosen.

Curve description	Type
Standard inverse time (SIT)	1.2
Very inverse time (VIT or LTI)	1.2
Extremely inverse time (EIT)	1.2
Ultra inverse time (UIT)	1.2
RI curve	1
IEC standard inverse time SIT/A	1
IEC very inverse time VIT or LTI/B	1
IEC extremely inverse time EIT/C	1
IEEE moderately inverse (IEC/D)	1
IEEE very inverse (IEC/E)	1
IEEE extremely inverse (IEC/F)	1
IAC inverse	1
IAC very inverse	1
IAC extremely inverse	1

The curve equations are given in the chapter entitled "IDMT protection functions".

The function takes into account current variations during the time delay interval.
For currents with a very large amplitude, the protection function has a definite time characteristic:
■ If I > 20 Is, tripping time is the time that corresponds to 20 Is
■ If I > 40 In, tripping time is the time that corresponds to 40 In
(In: rated current transformer current defined when entering the general settings).

Block diagram

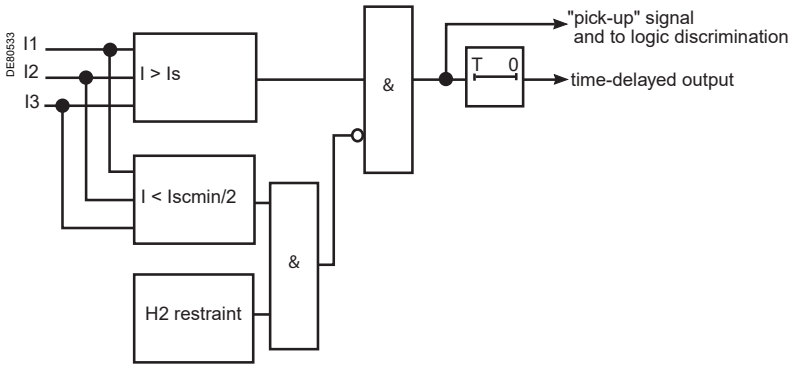

Phase overcurrent
ANSI code 50/51

Timer hold delay

The function includes an adjustable timer hold delay T1:

■ definite time (timer hold) for all the tripping curves

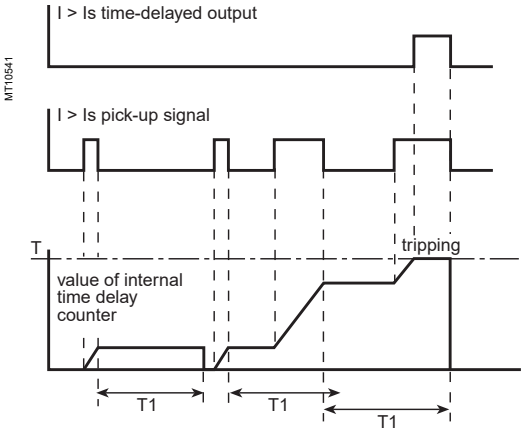

■ IDMT for IEC, IEEE and IAC curves

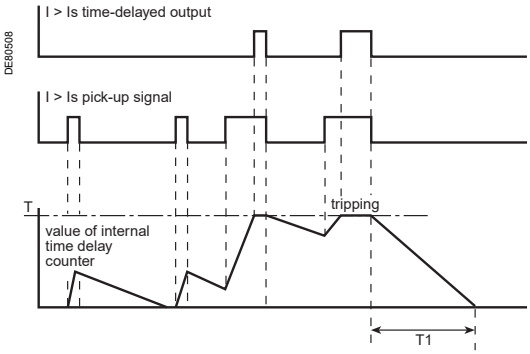

Characteristics

Tripping curve		
Setting		Definite time, IDMT: chosen according to list on previous page
Is set point		
Setting	Definite time	0.1 In ⩽ Is ⩽ 24 In expressed in Amps
	IDMT	0.1 In ⩽ Is ⩽ 2.4 In expressed in Amps
Resolution		1 A or 1 digit
Accuracy (1)		±5% or ±0.01 In
Drop-out/pick-up ratio		93.5% ±5% or > (1 - 0.02 In/Is) x 100%
Harmonic restraint 2		
Fixed threshold		17% ±5 %
Min short-circuit current Isc		
Setting		In to 999 kA
Time delay T (operation time at 10 Is)		
Setting	Definite time	inst, 50 ms ⩽ T ⩽ 300 s
	IDMT	100 ms ⩽ T ⩽ 12.5 s or TMS (2)
Resolution		10 ms or 1 digit
Accuracy (1)	Definite time	±2% or from -10 ms to +25 ms
	IDMT	Class 5 or from -10 ms to +25 ms
Timer hold delay T1		
Definite time (timer hold)		0; 0.05 to 300 s
IDMT (3)		0.5 to 300 s
Characteristic times		
Operation time		pick-up < 35 ms at 2 Is (typically 25 ms)
		confirmed instantaneous: ■ inst < 50 ms at 2 Is for Is ⩾ 0.3 In (typically 35 ms) ■ inst < 70 ms at 2 Is for Is < 0.3 In (typically 50 ms)
Overshoot time		< 35 ms
Reset time		< 50 ms (for T1 = 0)

(1) *Under reference conditions (IEC 60255-6)*

(2) *Setting ranges in TMS (Time Multiplier Setting) mode*

Inverse (SIT) and IEC SIT/A:	*0.04 to 4.20*
Very inverse (VIT) and	*0.07 to 8.33*
IEC VIT/B:	*0.01 to 0.93*
Long time inverse (LTI) and	*0.13 to 15.47*
IEC LTI/B:	*0.42 to 51.86*
Extremely inverse (EIT) and	*0.73 to 90.57*
IEC EIT/C:	*1.24 to 154.32*
IEEE moderately inverse:	*0.34 to 42.08*
IEEE very inverse:	*0.61 to 75.75*
IEEE extremely inverse:	*1.08 to 134.4*
IAC inverse:	
IAC very inverse:	
IAC extremely inverse:	

(3) *Only for standardized IEC, IEEE and IAC tripping curves.*

TS/TC equivalence for each protocol

Modbus	DNP3	IEC 60870-5-103	IEC 61850
TC	**Binary Output**	**ASDU, FUN, INF**	**LN.DO.DA**
TC3	BO08	20, 160, 23	LLN0.SGCB.SetActiveSettingGroup
TC4	BO09	20, 160, 24	LLN0.SGCB.SetActiveSettingGroup

Phase overcurrent Cold Load Pick-Up/Blocking
CLPU 50/51

Description

The Cold Load Pick-Up I or CLPU 50/51 function avoids nuisance tripping of the phase overcurrent protection (ANSI 50/51), during energization after a long outage. Depending on the installation characteristics, these operations can actually generate transient inrush currents likely to exceed the protection set points. These transient currents may be due to:
- the power transformer magnetizing currents
- the motor starting currents
- simultaneous resetting of all the loads in the installation (air conditioning, heating, etc.).

In principle, the protection settings should be defined so as to avoid tripping due to these transient currents. However, if these settings result in inadequate sensitivity levels or delays that are too long, the CLPU 50/51 function can be used to increase or inhibit set points temporarily after energization.

Operation

The CLPU 50/51 function starts if one of the following two conditions is fulfilled:
- a phase current is detected after all the currents have disappeared for longer than the time before activation Tcold
- input I22 has been activated, indicating a temporary overload due to starting of the load corresponding to the protected feeder, or a feeder downstream.

This detection results in either, depending on the parameter setting of Global action CLPU 50/51, for a predefined duration:
- application of a configurable multiplying factor to set point Is of each ANSI 50/51 protection unit
- or blocking of the various protection units

Setting the CLPU 50/51 function parameters allows the user to:
- define the time before activation Tcold and the pick-up threshold CLPUs
- choose which ANSI 50/51 protection units it affects
- define the type of action (multiplying factor or blocking), its duration T/x and if necessary, the multiplying factor M/x for each ANSI 50/51 protection unit x

By default, the CLPU 50/51 function is off.

Block diagram

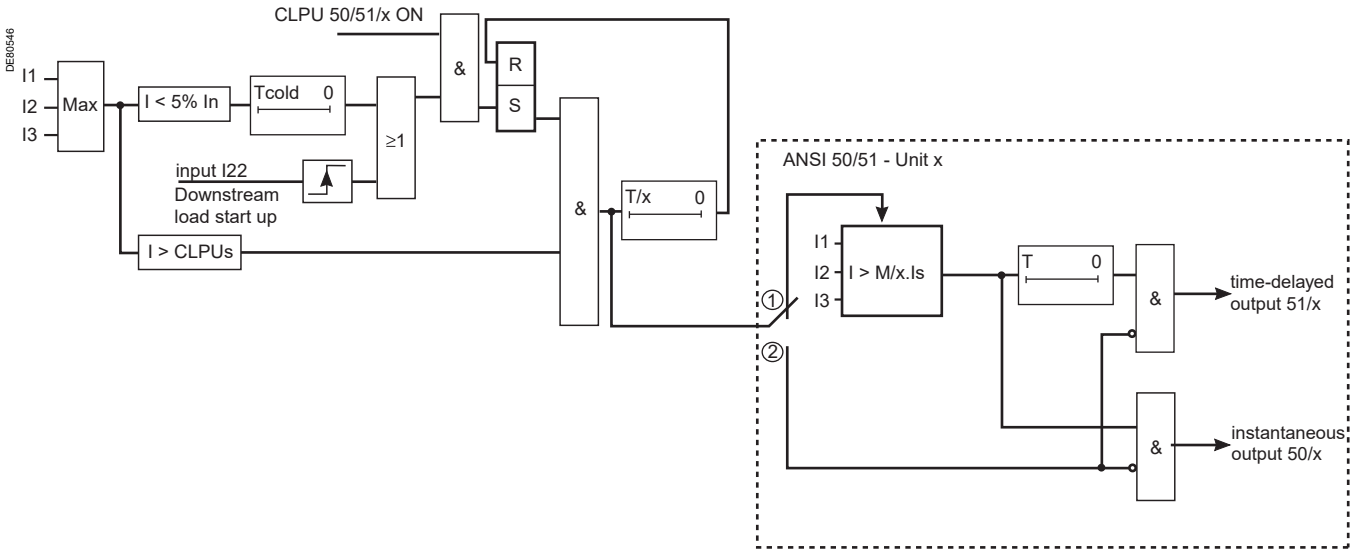

Action of the CLPU 50/51 function on set point Is of ANSI 50/51 protection unit x during time delay T/x depends on the Global action CLPU 50/51 setting:
① multiplication of set point Is by a coefficient M/x
② blocking

Phase overcurrent Cold Load Pick-Up/Blocking
CLPU 50/51

Characteristics

Time before activation Tcold (Setting common to CLPU 50/51 and CLPU 50N/51N functions)	
Setting	0.1 to 300 s
Resolution	10 ms
Accuracy	±2% or ±20 ms
Pick-up threshold CLPUs (Setting common to CLPU 50/51 and CLPU 50N/51N functions)	
Setting	10 to 100% In
Resolution	1% In
Accuracy	±5% or ±1% In
Global action CLPU 50/51	
Setting	Blocking/multiplication of the set point
Action on ANSI 50/51 protection unit x	
Setting	OFF/ON
Time delay T/x for ANSI 50/51 protection unit x	
Setting/resolution	100 to 999 ms in 1 ms steps
	1 to 999 s in 1 s steps
	1 to 999 min in 1 min steps
Accuracy	±2% or ±20 ms
Multiplying factor M/x for ANSI 50/51 protection unit x	
Setting	100 to 999% Is
Resolution	1% Is

Breaker failure
ANSI code 50BF

Operation

This function is designed to detect when a breaker fails, i.e. when it fails to open when a trip order is sent.
The "breaker failure" function is activated:
- by a trip order issued by the overcurrent protection functions (50/51, 50N/51N, 46)
- by an external trip order sent by logic input I24 (I24 should be assigned to external trip function 5)

It checks that the current has disappeared within the time interval specified by time delay T. It can also take account of the position of the breaker read on the logic inputs to determine effective breaker opening.

When the circuit breaker control function is used, the breaker failure function is activated automatically by protection units 50/51, 50N/51N and 46, which trip the breaker.
When the circuit breaker control function is not used, the user has the choice of overcurrent protection functions to associate with the breaker failure protection function.

The protection delayed output should be assigned to a logic output using the control matrix.

Launching and stopping the time delay counter T both depend on the presence of a current above the set point (I > Is) or, according to the parameter setting, on the absence of breaker opening.

Block diagram

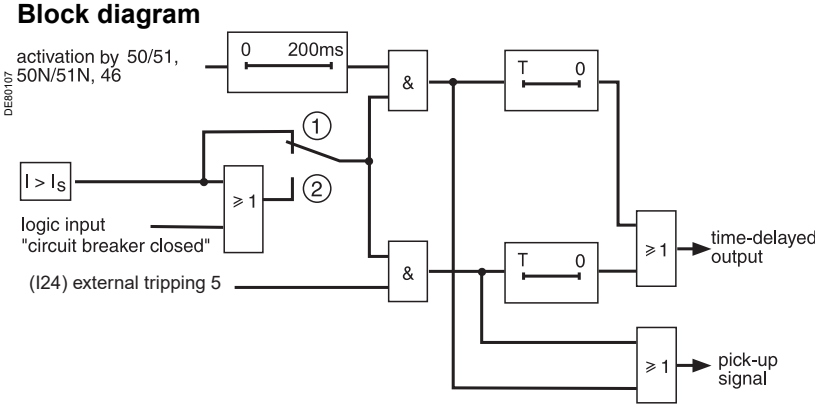

Setting: (1) Not accounting for the circuit breaker position
(2) Accounting for the circuit breaker position

Note: *When an external trip order is issued on input I24 of an MES114 module configured for AC, the 50BF operating characteristics are not guaranteed.*

Breaker failure
ANSI code 50BF

Setting example

The example below shows how to determine the time delay setting for the breaker failure function:
Overcurrent protection setting: T = inst.
Circuit breaker operating time: 60 ms
Auxiliary relay operating time to open the upstream circuit breaker(s): 10 ms

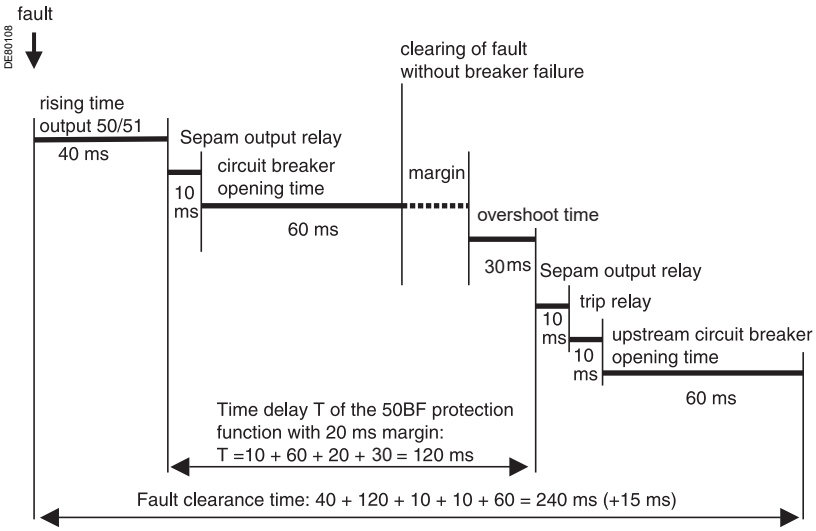

The time delay for the breaker failure function is the sum of the following times:
Rise time for the Sepam O1 output relay = 10 ms
Circuit breaker opening time = 60 ms
Overshoot time for the breaker failure function = 30 ms
To avoid nuisance tripping by the upstream breakers, select a margin of approximately 20 ms.
This gives a time delay of T = 120 ms.

Characteristics

Is set point	
Setting	0.2 In to 2 In
Accuracy (1)	±5%
Resolution	0.1 A
Drop-out/pick-up ratio	(87.5 ±10)%
Time delay T	
Setting	0.05 to 300 s
Accuracy (1)	±2%, or 0 ms to +15 ms
Resolution	10 ms or 1 digit
Characteristic times	
Overshoot time	< 30 ms
Taking into account of the circuit breaker position	
Setting	With/without
Choice of protection functions that activate the 50BF protection in the absence of circuit breaker control	
50/51-1A, 50/51-1B, 50/51-2A, 50/51-2B, 50N/51N-1A, 50N/51N-1B, 50N/51N-2A 50N/51N-2B, 46	

(1) Under reference conditions (IEC 60255-6)

Earth fault
ANSI code 50N/51N or 50G/51G

Description
The earth fault function comprises 4 independant elements divided into two groups of 2 settings called Group A and Group B respectively.
The use of the two elements may be chosen by parameter setting:
■ operation with Group A or Group B exclusively, with switching from one group to the other dependent on the state of logic input I13 exclusively, or by remote control (TC3, TC4),
I13 = 0 group A
I13 = 1 group B
■ operation with Group A and Group B active for 4-set point operation
■ enabling/disabling of each group of 2 elements (A, B).

Operation
Earth fault protection is single-phase.
It picks up if the earth fault current reaches the operation set point.
It includes a time delay, which is either definite (constant, **DT**) or IDMT depending on the curves on the facing page.
The protection function includes a harmonic 2 restraint set point which can be used to bypass the incorrect residual current on the sum of the 3 phase CTs when the transformers are energized. The restraint can be selected by parameter setting.
The principle of this harmonic 2 restraint allows this protection to trip on intermittent earth faults.
The protection function can be inhibited by input I23 for the S24 application only.

Definite time protection
Is0 is the operation set point expressed in Amps, and T is the protection operation time delay.

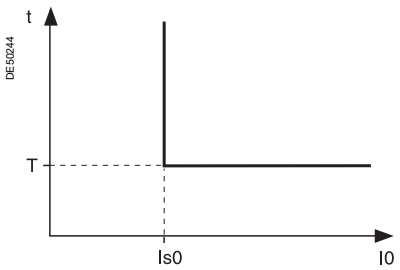

Definite time protection principle.

IDMT protection
IDMT protection operates in accordance with the IEC 60255-3, BS 142 and IEEE C-37112 standards.

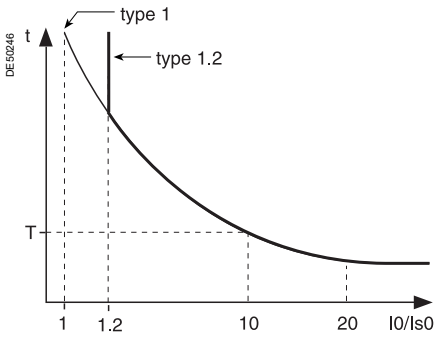

IDMT protection principle.

The Is0 setting is the vertical asymptote of the curve, and T is the operation time delay for 10 Is0.
The tripping time for I0/Is0 values of less than 1.2 depends on the type of curve chosen.

Name of curve	Type
Standard inverse time (SIT)	1.2
Very inverse time (VIT or LTI)	1.2
Extremely inverse time (EIT)	1.2
Ultra inverse time (UIT)	1.2
RI curve	1
IEC standard inverse time SIT / A	1
IEC very inverse time VIT or LTI / B	1
IEC extremely inverse time EIT / C	1
IEEE moderately inverse (IEC / D)	1
IEEE very inverse (IEC / E)	1
IEEE extremely inverse (IEC / F)	1
IAC inverse	1
IAC very inverse	1
IAC extremely inverse	1

The curve equations are given in the chapter entitled "IDMT protection functions".

The function takes into account current variations during the time delay interval.
For currents with a very large amplitude, the protection function has a definite time characteristic:
■ if I0 > 20 Is0, tripping time is the time that corresponds to 20 Is0
■ if I0 > 15 In0, tripping time is the time that corresponds to 15 In0.

Block diagram

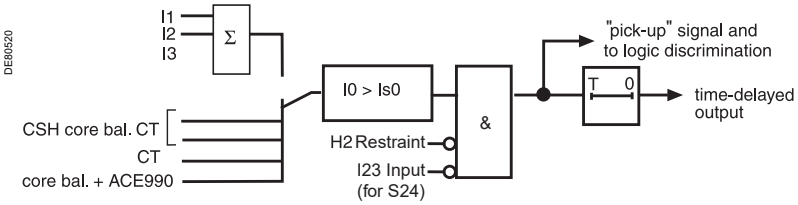

Earth fault
ANSI code 50N/51N or 50G/51G

Timer hold delay

The function includes an adjustable timer hold delay T1:

■ definite time (timer hold) for all the tripping curves

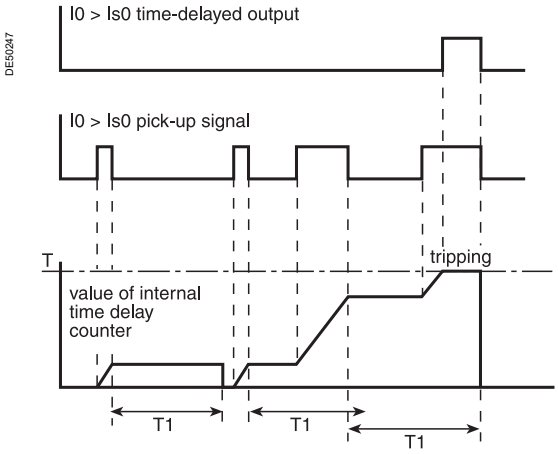

■ IDMT for IEC, IEEE and IAC curves

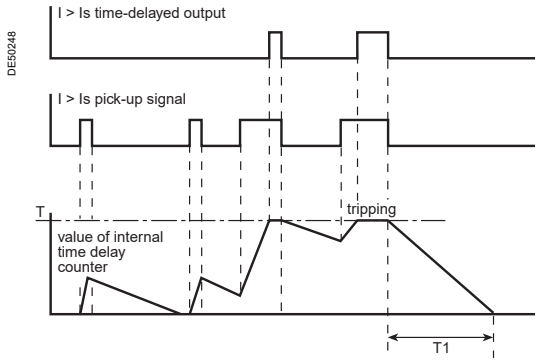

(1) In0 = In if the sum of the three phase currents is used for the measurement.
In0 = sensor rating if the measurement is taken by a CSH core balance CT.
In0 = In of the CT if the measurement is taken by a 1 A or 5 A current transformer.
(2) In reference conditions (IEC 60255-6).
(3) Setting ranges in TMS (Time Multiplier Setting) mode
Inverse (SIT) and IECIEC SIT/A: 0.04 to 4.20
Very inverse (VIT) and IEC VIT/B: 0.07 to 8.33
Very inverse (LTI) and IEC LTI/B:0.01 to 0.93
Ext inverse (EIT) and IEC EIT/C: 0.13 to 15.47
IEEE moderately inverse: 0.42 to 51.86
IEEE very inverse: 0.73 to 90.57
IEEE extremely inverse: 1.24 to 154.32
IAC inverse: 0.34 to 42.08
IAC very inverse: 0.61 to 75.75
IAC extremely inverse:1.08 to 134.4
(4) Only for standardized tripping curves of the IEC, IEEE and IAC types.
(5) For Is0 < 0.4 In0, the minimum time delay is 300 ms. If a shorter time delay is needed, use the CT + CSH30 or CT + CCA634 combination.

Characteristics

Tripping curve		
Setting		Definite time, IDMT: chosen according to list on previous page
Is0 set point		
Definite time setting		0.1 In0 ⩽ Is0 ⩽ 15 In0 expressed in Amps
	Sum of CTs (1) (5)	0.1 In0 ⩽ Is0 ⩽ 15 In0
	With CSH sensor	
	2 A rating	0.2 A to 30 A
	20 A rating	2 A to 300 A
	CT	0.1 In0 ⩽ Is0 ⩽ 15 In0 (min. 0.1 A)
	Core balance CT with ACE990	0.1 In0 < Is0 < 15 In0
IDMT time setting		0.1 In0 ⩽ Is0 ⩽ In0 (1) expressed in Amps
	Sum of CTs (1) (5)	0.1 In0 ⩽ Is0 ⩽ In0
	With CSH sensor	
	2 A rating	0.2 A to 2 A
	20 A rating	2 A to 20 A
	CT	0.1 In0 ⩽ Is0 ⩽ In0 (min. 0.1 A)
	Core balance CT with ACE990	0.1 In0 ⩽ Is0 ⩽ In0
Resolution		0.1 A or 1 digit
Accuracy (2)		±5 % or ±0.01 In0
Drop out/pick-up ratio		93.5 % ±5 % (with CSH sensor, CT or core balance CT + ACE990)
		93.5 % ±5 % or > (1 - 0.015 In0/Is0) x 100 % (sum of CTs)
Harmonic 2 restraint		
Fixed threshold		17 % ±5 %
Time delay T (operation time at 10 Is0)		
Setting	Definite time	inst. 50 ms ⩽ T ⩽ 300 s
	IDMT (3)	100 ms ⩽ T ⩽ 12.5 s or TMS (3)
Resolution		10 ms or 1 digit
Accuracy (2)	Definite time	±2 % or from -10 ms to +25 ms
	IDMT	class 5 or from -10 ms to +25 ms
Timer hold delay T1		
Definite time (timer hold)		0; 0.05 to 300 s
IDMT (4)		0.5 to 20 s
Characteristic times		
Operation time		pick-up < 35 ms at 2 Is0 (typically 25 ms)
		confirmed instantaneous: ■ inst. < 50 ms at 2 Is0 for Is0 ⩾ 0.3 In0 (typically 35 ms) ■ inst. < 70 ms at 2 Is0 for Is0 < 0.3 In0 (typically 50 ms)
Overshoot time		< 35 ms
Reset time		< 40 ms (for T1 = 0)

TS/TC equivalence for each protocol

Modbus	DNP3	IEC 60870-5-103	IEC 61850
TC	**Binary Output**	**ASDU, FUN, INF**	**LN.DO.DA**
TC3	BO08	20, 160, 23	LLN0.SGCB.SetActiveSettingGroup
TC4	BO09	20, 160, 24	LLN0.SGCB.SetActiveSettingGroup

Earth fault Cold Load Pick-Up/Blocking
CLPU 50N/51N

Description

The Cold Load Pick-Up I0 or CLPU 50N/51N function avoids nuisance tripping of the earth fault protection (ANSI 50N/51N) during energization after a long outage.
Depending on the installation characteristics, such operations can actually generate transient inrush currents.
If the residual current measurement is based on the sum of the 3 phase CTs, the aperiodic component of these transient currents can result in saturation of the phase CTs, which can result in a residual current measurement likely to exceed the protection set points.
These transient currents are essentially due to:
■ the power transformer magnetizing currents
■ the motor starting currents
In principle, the protection settings should be defined so as to avoid tripping due to these transient currents.
However, if these settings result in inadequate sensitivity levels or delays that are too long, the CLPU 50N/51N function is used to increase or inhibit set points temporarily after energization.
If the residual current is measured by a correctly installed CT, there is less risk of measuring an incorrect residual current. In this case, there is no need to use the CLPU 50N/51N function.

Operation

The CLPU 50N/51N function starts if one of the following conditions is fulfilled:
■ a phase current is detected after all the currents have disappeared for longer than the time before activation Tcold
■ input I22 has been activated, indicating a temporary overload due to starting of the load corresponding to the protected feeder, or a feeder downstream.

This detection results in either, depending on the parameter setting of Global action CLPU 50N/51N, for a predefined duration:
■ application of a configurable multiplying factor to set point Is0 of each ANSI 50N/51N protection unit
■ or blocking of the various protection units

Setting the CLPU 50N/51N function parameters allows the user to:
■ define the time before activation Tcold and the pick-up threshold CLPUs
■ choose which ANSI 50N/51N protection units it affects
■ define the type of action (multiplying factor or blocking), its duration T0/x and if necessary, the multiplying factor M0/x for each ANSI 50N/51N protection unit x
By default, the CLPU 50N/51N function is off.

Setting assistance

During use with multiplying factor M0/x, it is advisable to set the Is0 set point of the 50N/51N protection unit higher than the pick-up threshold CLPUs.

Block diagram

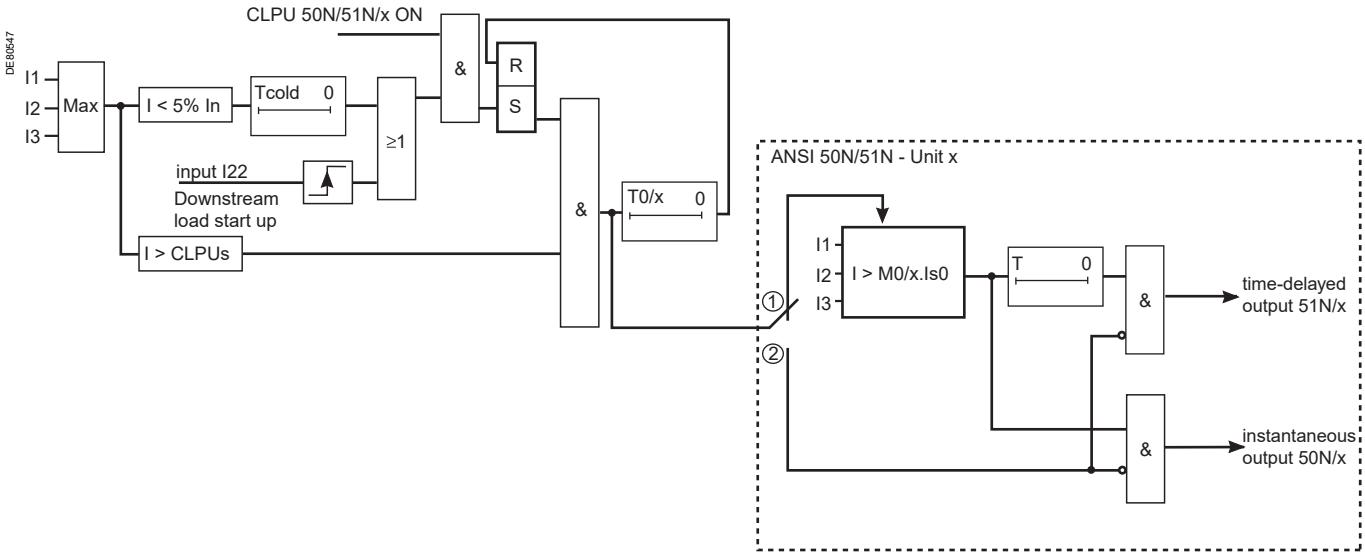

Action of the CLPU 50N/51N function on set point Is0 of ANSI 50N/51N protection unit x during time delay T0/x depends on the Global action CLPU 50N/51N setting:
1 multiplication of set point Is0 by a coefficient M0/x
2 blocking

Earth fault Cold Load Pick-Up/Blocking
CLPU 50N/51N

Characteristics

Time before activation Tcold (Setting common to CLPU 50/51 and CLPU 50N/51N functions)	
Setting	0.1 to 300 s
Resolution	10 ms
Accuracy	±2% or ±20 ms
Pick-up threshold CLPUs (Setting common to CLPU 50/51 and CLPU 50N/51N functions)	
Setting	10 to 100% In
Resolution	1% In
Accuracy	±5% or ±1% In
Global action CLPU 50N/51N	
Setting	Blocking/multiplication of the set point
Action on ANSI 50N/51N protection unit x	
Setting	OFF/ON
Time delay T0/x for ANSI 50N/51N protection unit x	
Setting/resolution	100 to 999 ms in 1 ms steps
	1 to 999 s in 1 s steps
	1 to 999 min in 1 min steps
Accuracy	±2% or ±20 ms
Multiplying factor M0/x for ANSI 50N/51N protection unit x	
Setting	100 to 999% Is0
Resolution	1% Is0

Phase-to-phase overvoltage
ANSI code 59

Operation

This protection is three-phase:
- it picks up when one of the phase-to-phase voltages concerned is greater than the Us set point
- the protection includes a definite time delay.

Block diagram

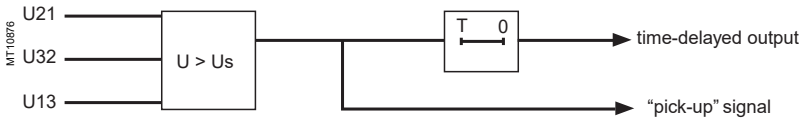

Characteristics

Us set point	
Setting	50% to 150% Unp if Uns < 208 V
	50% to 135% Unp if Uns ⩾ 208 V
Accuracy (1)	±2 % or 0.005 Unp
Resolution	1 %
Drop-out/pick-up ratio	97 % ±1 %
Time delay T	
Setting	50 ms to 300 s
Accuracy (1)	±2 %, or ±25 ms
Resolution	10 ms or 1 digit
Characteristic times	
Operation time	pick-up < 35 ms (typically 25 ms)
Overshoot time	< 35 ms
Reset time	< 40 ms

(1) *In reference conditions (IEC 60255-6).*

Neutral voltage displacement
ANSI code 59N

Operation

The protection function picks up if the residual voltage V0 is above a Vs0 set point, with $\vec{V0} = \vec{V1} + \vec{V2} + \vec{V3}$,

- it includes a definite time delay T
- the residual voltage is either calculated from the 3 phase voltages or measured by an external VT.

Block diagram

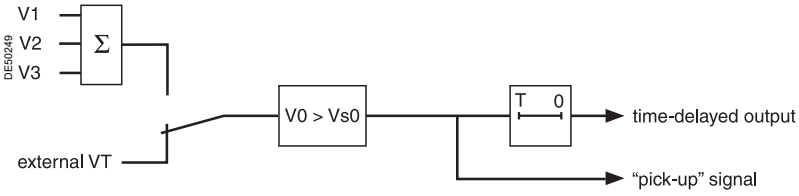

Characteristics

Vs0 set point	
Setting	2 % Unp to 80 % Unp if Vns0 (2) = sum of 3Vs
	2 % Unp to 80 % Unp if Vns0 (2) = Uns/√3
	5 % Unp to 80 % Unp if Vns0 (2) = Uns/3
Accuracy (1)	±2 % or ±0.005 Unp
Resolution	1 %
Drop-out/pick-up ratio	97 % ±1 %
Time delay T	
Setting	50 ms to 300 s
Accuracy (1)	±2 %, or ±25 ms
Resolution	10 ms or 1 digit
Characteristic times	
Operation time	pick-up < 55 ms
Overshoot time	< 35 ms
Reset time	< 55 ms

(1) *In reference conditions (IEC 60255-6).*

(2) *Vns0 is one of the general settings.*

Starts per hour
ANSI code 66

Operation

This function is three-phase.
It picks up when the number of starts reaches the following limits:
- maximum number of starts allowed per period of time (P) (Nt)
- maximum allowed number of consecutive hot starts (Nh)
- maximum allowed number of consecutive cold starts (Nc).

The function indicates:
- the number of starts still allowed before the maximum, if the protection has not picked up. The number of starts depends on the motor's thermal state
- waiting time before a start is allowed, if the protection has picked up.

Starting is detected when the current consumed becomes greater than 10 % of the Ib current.

User information
The following information is available for the user:
- the waiting time before a start is allowed
- the number of starts still allowed.

See chapter "Machine operation assistance functions".

The number of consecutive starts is the number starts counted during the last P/Nt minutes, Nt being the number of starts allowed per period.
The motor hot state corresponds to the overshooting of the fixed set point (50 % heat rise) of the thermal overload function.
When the motor re-accelerates, it undergoes a stress similar to that of starting without the current first passing through a value less than 10 % of Ib, in which case the number of starts is not incremented.
It is possible however to increment the number of starts when a re-acceleration occurs by a logic data input (input I22).

Block diagram

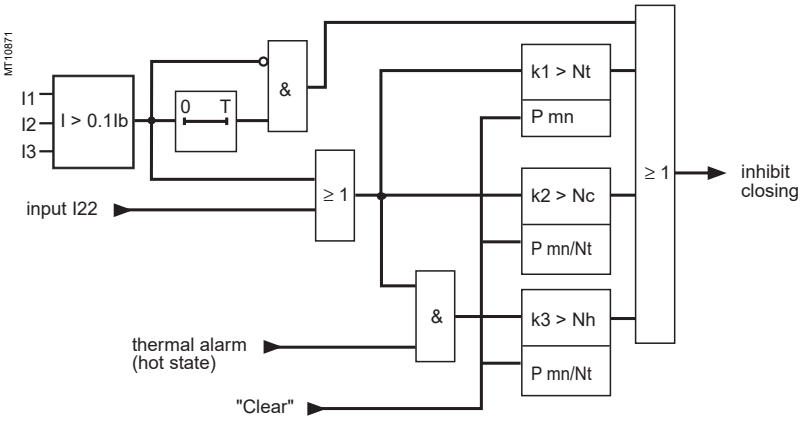

Characteristics

Period of time (P)	
Setting	1 to 6 hr
Resolution	1
Nt total number of starts	
Setting	1 to 60
Resolution	1
Nh and Nc number of consecutive starts	
Setting (1)	1 to Nt
Resolution	1
T time delay between starts	
Setting	0 mn ⩽ T ⩽ 90 mn (0: no time delay)
Resolution	1 mn or 1 digit

(1) With Nc ⩽ Nf.

Recloser
ANSI code 79

Operation

Initialization of the recloser
The recloser is ready to operate if all of the following conditions are met:
- "CB control" function activated and recloser in service
- circuit breaker closed
- inhibition time delay not running
- none of the recloser inhibition conditions is true (see further on).

Recloser cycles
- case of a cleared fault:
  - following a reclosing order, if the fault does not appear after the memory time delay has run out, the recloser reinitializes and a message appears on the display (see example 1)
- case of a fault that is not cleared:
  - following instantaneous or time-delayed tripping by the protection unit, activation of the isolation time delay associated with the first active cycle.
  At the end of the time delay, a closing order is given, which activates the memory time delay.
  If the protection unit detects the fault before the end of the time delay, a tripping order is given and the following reclosing cycle is activated.
  - after all the active cycles have been run, if the fault still persists, a final trip order is given, a message appears on the display and closing is locked out until acknowledgment takes place, according to the parameter setting of the protection function
- closing on a fault.
  If the circuit breaker closes on a fault, or if the fault appears before the end of the lockout time delay, the recloser is inhibited.

Recloser inhibition conditions
The recloser is inhibited according to the following conditions:
- voluntary open or close order
- recloser put out of service
- receipt of a lockout order on the lockout logic input I26
- appearance of a switchgear-related fault, such as trip circuit fault, or unexecture control order fault
- opening of the circuit breaker by external tripping via inputs I21, I22 or I23.

Characteristics

Reclosing cycles			Setting
Number of cycles			1 to 4
Activation of cycle 1 (1)		overcurrent 1	inst. / delayed / inactive
		overcurrent 2	inst. / delayed / inactive
		earth fault 1	inst. / delayed / inactive
		earth fault 2	inst. / delayed / inactive
Activation of cycles 2, 3 and 4 (1)		overcurrent 1	inst. / delayed / inactive
		overcurrent 2	inst. / delayed / inactive
		earth fault 1	inst. / delayed / inactive
		earth fault 2	inst. / delayed / inactive
Time delays			
Memory time delay			0.05 to 300 s
Isolation time delay	cycle 1		0.05 to 300 s
	cycle 2		0.05 to 300 s
	cycle 3		0.05 to 300 s
	cycle 4		0.05 to 300 s
Lockout time delay			0.05 to 300 s
Accuracy			±2 % or 25 ms
Resolution			10 ms or 1 digit

(1) If a protection function that is inactive in relation to the recloser leads to circuit breaker opening, the recloser is inhibited.

Recloser
ANSI code 79

Example 1: case of successful reclosing after the first cycle. Activation with 300 ms time-delayed O/C protection

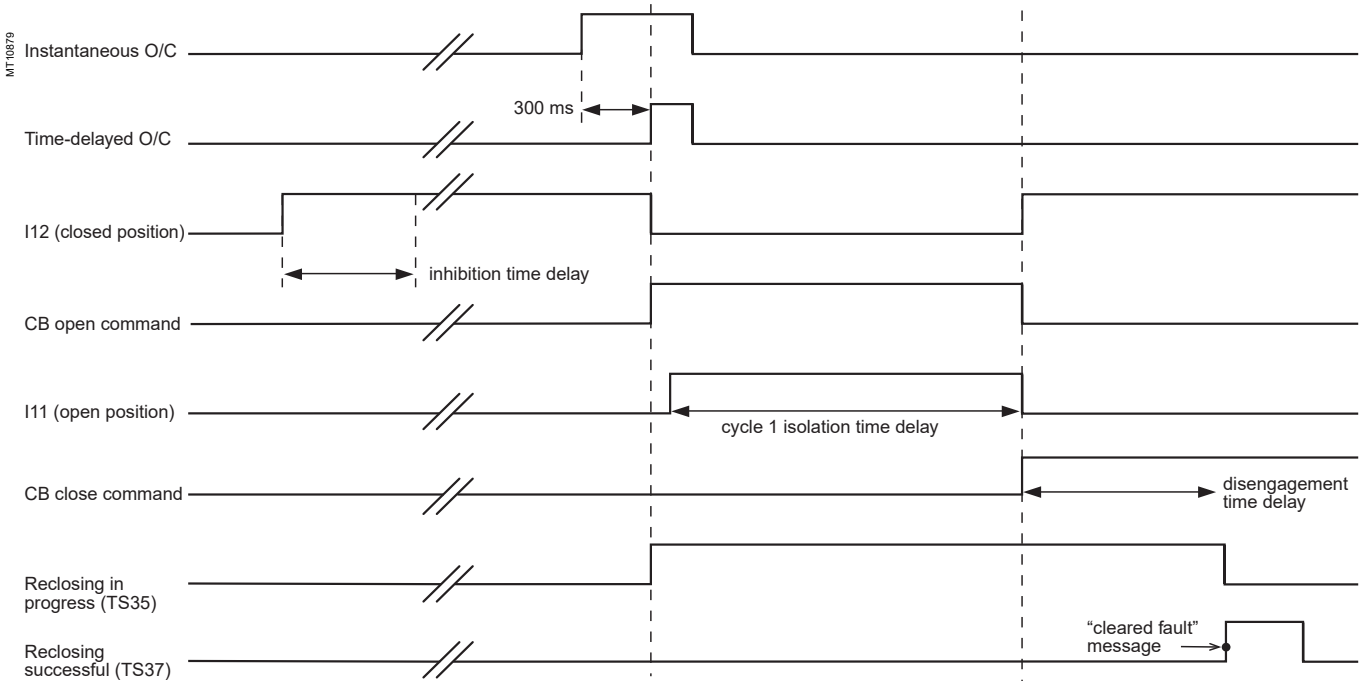

Example 2: case of definitive tripping after two cycles activated by 300 ms time-delayed O/C protection

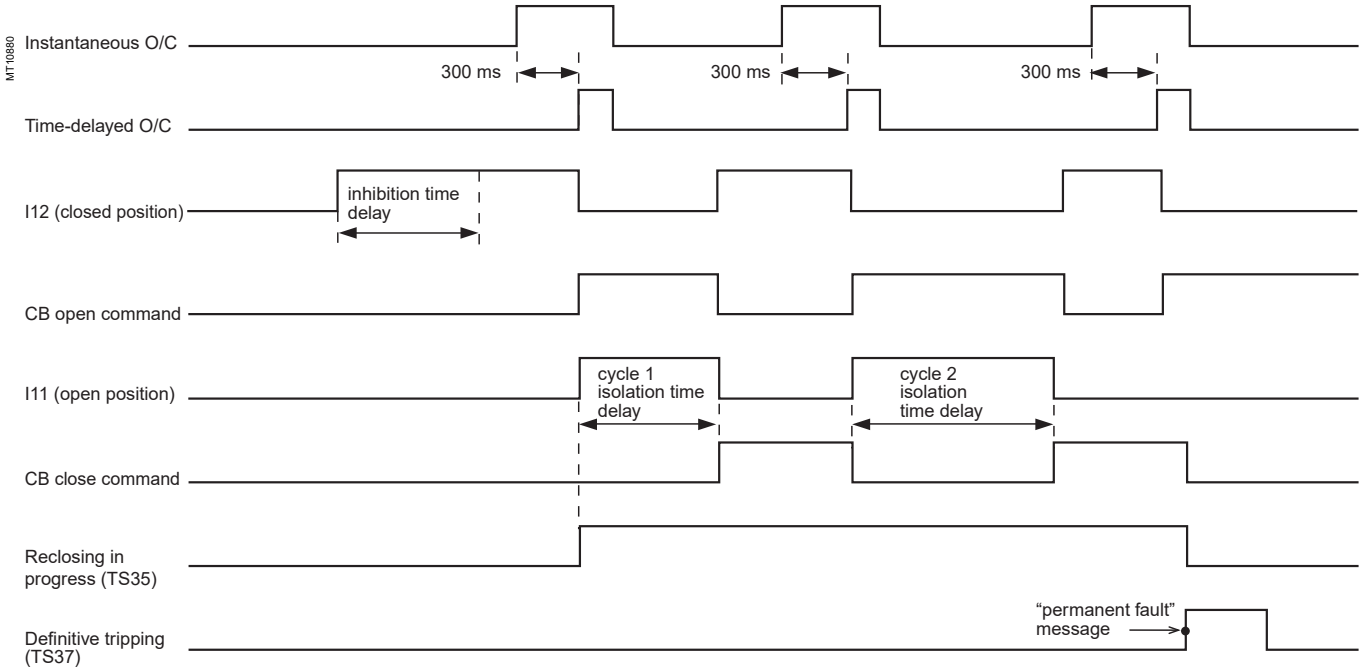

Overfrequency
ANSI code 81H

Operation

The protection function picks up when the positive sequence voltage frequency is above the set point and the positive sequence voltage is more than 20 % of Vnp (Unp/$\sqrt{3}$).
If a single VT is connected (U21), the function picks up when the frequency is higher than the set point and the U21 voltage is more than 20 % of Unp.
It includes a definite time delay T.

Block diagram

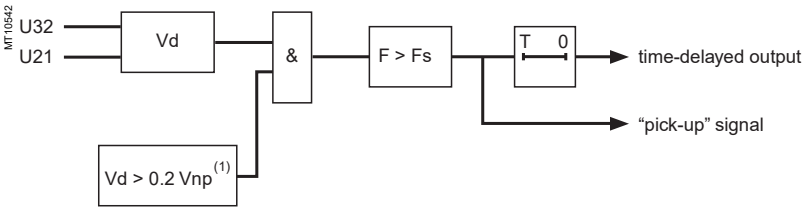

***(1)** or U21 > 0.2 Unp if only one VT.*

If there is only one sensor (U21), the voltage signal is connected to terminals 1 and 2 of the connector CCT640, whatever the phase.

Characteristics

Fs set point	
Setting	50 to 53 Hz or 60 to 63 Hz
Resolution	0.1 Hz
Accuracy (1)	±0.1 Hz
Pick-up / drop-out difference	0.2 Hz ±0.1 Hz
Time delay T	
Setting	100 ms to 300 s
Accuracy (1)	±2 % or ±25 ms
Resolution	10 ms or 1 digit
Characteristic times (1)	
Operation time	pick-up < 100 ms (typically 80 ms)
Overshoot time	< 100 ms
Reset time	< 100 ms

***(1)** In reference conditions (IEC 60255-6) and df/dt < 3 Hz/s.*

Underfrequency
ANSI code 81L

Operation

The function picks up when the positive sequence voltage frequency is below the set point and if the positive sequence voltage is more than 20 % of Vnp (Unp/$\sqrt{3}$).
If a single VT is connected (U21), the function picks up when the frequency is below the set point and the U21 voltage is more than 20 % of Unp.
It includes a definite time delay T.

Block diagram

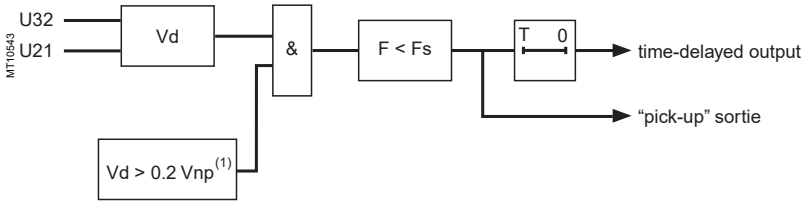

***(1)** Or U21 > 0.2 Unp if only one VT.*

If there is only one sensor (U21), the voltage signal is connected to terminals 1 and 2 of the connector CCT640, whatever the phase.

Characteristics

Fs set point	
Setting	45 to 50 Hz or 55 to 60 Hz
Resolution	0.1 Hz
Accuracy (1)	±0.1 Hz
Pick-up / drop-out difference	0.2 Hz ±0.1 Hz
Time delay T	
Setting	100 ms to 300 s
Accuracy (1)	±2 % or ±25 ms
Resolution	10 ms or 1 digit
Characteristic times (1)	
Operation time	pick-up < 100 ms (typically 80 ms)
Overshoot time	< 100 ms
Reset time	< 100 ms

***(1)** In reference conditions (IEC 60255-6) and df/dt < 3 Hz/s.*

Rate of change of frequency
ANSI code 81R

Operation

This function picks up when the rate of change of frequency (ROCOF) of the positive sequence voltage overshoots the set point.
If only one VT is connected (U21), the function is inhibited.
It includes a definite time delay T.

Block diagram

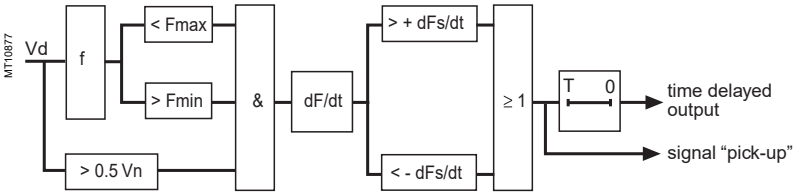

Characteristics

dFs/dt set point		
Setting		0.1 to 10 Hz/s
Resolution		0.1 Hz/s
Accuracy	tripping	±5 % or ±0.1 Hz/s
	no tripping	±3 % or ±0.05 Hz/s
Time delay T		
Setting		100 ms to 300 s
Accuracy		±2 % or ±25 ms
Resolution		10 ms or 1 digit
Characteristic times (1)		
Operation time		pick-up < 170 ms (130 ms typical)
Overshoot time		< 100 ms
Reset time		< 100 ms

(1) *In reference conditions (IEC 60255-6).*

General
Tripping curves

Presentation of tripping curve operation and settings for protection functions using:
- *definite time*
- *IDMT*
- *timer hold.*

Definite time protection

The tripping time is constant. The time delay is started when the set point is overrun.

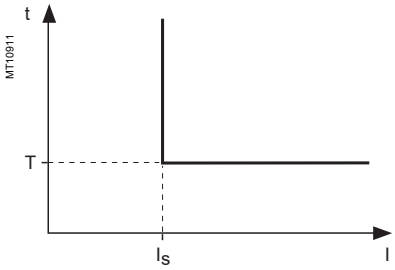

Definite time protection principle.

IDMT protection

The operation time depends on the protected value (phase current, earth fault current, etc.) in accordance with standards IEC 60255-3, BS 142 and IEEE C˜37112.
Operation is represented by a characteristic curve, e.g.:
- t = f(I) curve for the **phase overcurrent** function
- t = f(I0) curve for the **earth fault** function.

The rest of the document is based on t = f(I); the reasoning may be extended to other variables I0, etc.
The curve is defined by:
- its type (standard inverse, very inverse, extremely inverse, etc.)
- current setting Is which corresponds to the vertical asymptote of the curve
- time delay T which corresponds to the operation time for I = 10 Is.

These 3 settings are made chronologically in the following order: type, Is current, time delay T.
Changing the time delay T setting by x % changes all of the operation times in the curve by x %.

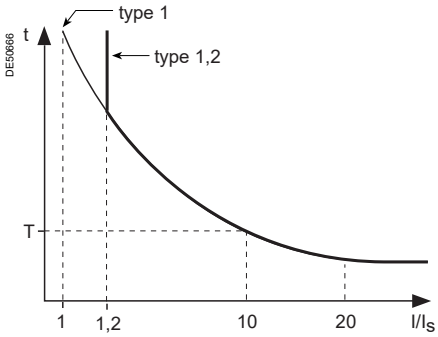

IDMT protection principle.

The tripping time for I/Is values less than 1.2 depends on the type of curve selected.

Name of curve	Type
Standard inverse time (SIT)	1, 2
Very inverse time (VIT or LTI)	1, 2
Extremely inverse time (EIT)	1, 2
Ultra inverse time (UIT)	1, 2
RI curve	1
IEC inverse time SIT / A	1
IEC very inverse time VIT or LTI / B	1
IEC extremely inverse time EIT / C	1
IEEE moderately inverse (IEC / D)	1
IEEE very inverse (IEC / E)	1
IEEE extremely inverse (IEC / F)	1
IAC inverse	1
IAC very inverse	1
IAC extremely inverse	1

- when the monitored value is more than 20 times the set point, the tripping time is limited to the value corresponding to 20 times the set point.
- if the monitored value exceeds the measurement capacity of Sepam (40 In for the phase current channels, 20 In0 for the residual current channels), the tripping time is limited to the value corresponding to the largest measurable value (40 In or 20 In0).

Current IDMT tripping curves

Multiple IDMT tripping curves are offered, to cover most applications:

- IEC curves (SIT, VIT/LTI, EIT)
- IEEE curves (MI, VI, EI)
- commonly used curves (UIT, RI, IAC).

IEC curves

Equation

$$t_d(I) = \frac{k}{\left(\frac{I}{I_s}\right)^{\alpha} - 1} \times \frac{T}{\beta}$$

Curve type	Coefficient values		
	k	α	β
Standard inverse / A	0.14	0.02	2.97
Very inverse / B	13.5	1	1.50
Long time inverse / B	120	1	13.33
Extremely inverse / C	80	2	0.808
Ultra inverse	315.2	2.5	1

RI curve

Equation:

$$t_d(I) = \frac{1}{0.339 - 0.236\left(\frac{I}{I_s}\right)^{-1}} \times \frac{T}{3.1706}$$

IEEE curves

Equation

$$t_d(I) = \left(\frac{A}{\left(\frac{I}{I_s}\right)^{p} - 1} + B\right) \times \frac{T}{\beta}$$

Curve type	Coefficient values			
	A	B	p	β
Moderately inverse	0.010	0.023	0.02	0.241
Very inverse	3.922	0.098	2	0.138
Extremely inverse	5.64	0.0243	2	0.081

IAC curves

Equation

$$t_d(I) = \left(A + \frac{B}{\left(\frac{I}{I_s} - C\right)} + \frac{D}{\left(\frac{I}{I_s} - C\right)^2} + \frac{E}{\left(\frac{I}{I_s} - C\right)^3}\right) x \frac{T}{\beta}$$

Curve type	Coefficient values					
	A	B	C	D	E	β
Inverse	0.208	0.863	0.800	-0.418	0.195	0.297
Very inverse	0.090	0.795	0.100	-1.288	7.958	0.165
Extremely inverse	0.004	0.638	0.620	1.787	0.246	0.092

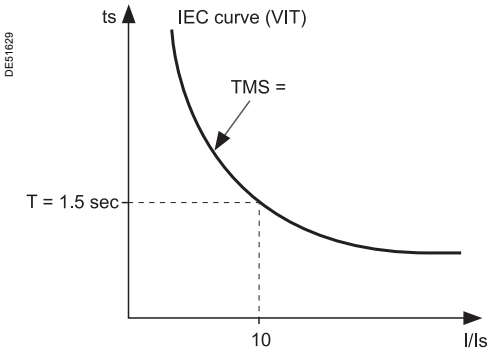

Example.

Setting of IDMT tripping curves, time delay T or TMS factor

The time delays of current IDMT tripping curves (except for customized and RI curves) may be set as follows:

- time T, operating time at 10 x Is
- TMS factor, factor shown as T/β in the equations on the left.

Example: $t(I) = \frac{13.5}{\frac{I}{Is} - 1} \times TMS$ where $TMS = \frac{T}{1.5}$.

The IEC curve of the VIT type is positioned so as to be the same with TMS = 1 or T = 1.5 s.

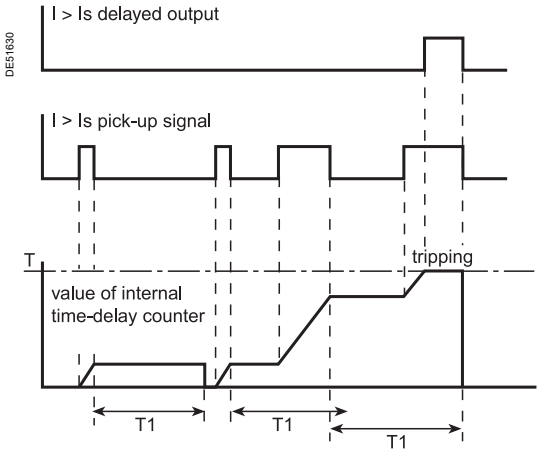

Detection of restriking faults with adjustable timer hold.

Timer hold

The adjustable timer hold T1 is used for:

- detection of restriking faults (DT curve)
- coordination with electromechanical relays (IDMT curve).
- Timer hold may be inhibited if necessary.

Equation for IDMT timer hold curve

Equation: $t_r(I) = \frac{T1}{1 - \left(\frac{I}{Is}\right)^2} \times \frac{T}{\beta}$ where $\frac{T}{\beta} = TMS$.

T1 = timer hold setting (timer hold for I reset = 0 and TMS = 1)
T = tripping time delay setting (at 10 Is)

b = basic tripping curve value at $\frac{k}{10^{\alpha} - 1}$.

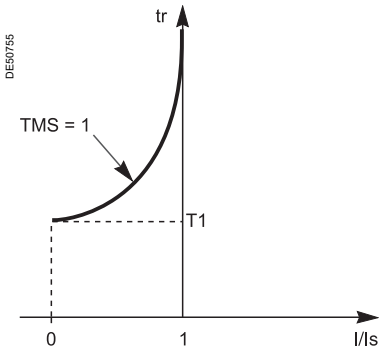

Timer hold dependent on current I.

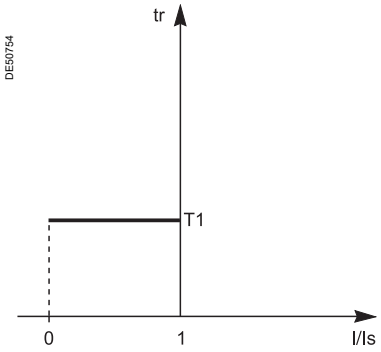

Constant timer hold.

Implementing IDMT curves: examples of problems to be solved.

Problem 1.
Given the type of IDMT, determine the Is current and time delay T settings.
Theoretically, the Is current setting corresponds to the maximum continuous current: it is generally the rated current of the protected equipment (cable, transformer).
The time delay T corresponds to operation at 10 Is on the curve. This setting is determined taking into account the constraints involved in discrimination with the upstream and downstream protection devices.
The discrimination constraint leads to the definition of point A on the operation curve (IA, tA), e.g. the point that corresponds to the maximum fault current for the downstream protection device.

Problem 2.
Given the type of IDMT, the Is current setting and a point k (Ik, tk) on the operation curve, determine the time delay setting T.
On the standard curve of the same type, read the operation time tsk that corresponds to the relative current **Ik/Is** and the operation time Ts10 that corresponds to the relative current **I/Is = 10.**

The time delay setting to be used so that the operation curve passes through the point k (Ik, tk) is:

$$T = Ts10 \times \frac{tk}{tsk}$$

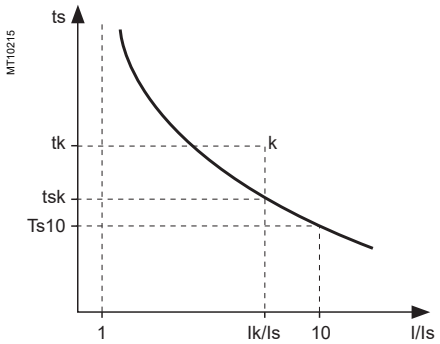

Another practical method:
the table below gives the values of **K = ts/ts10** as a function of **I/Is.**
In the column that corresponds to the type of time delay, read the value **K = tsk/Ts10** on the line for **Ik/Is.**
The time delay setting to be used so that the operation curve passes through point k (Ik, tk) is: **T = tk/k.**

Example
Data:
- type of time delay: standard inverse time (**SIT**)
- set point: Is
- a point k on the operation curve: k (3.5 Is; 4 s)

Question: What is the time delay T setting (operation time at 10 Is)?
Reading the table: **SIT** column, line **I/Is** = **3.5** therefore **K = 1.858**
Answer: The time delay setting is **T = 4/1.858 = 2.15 s**

Problem 3.
Given the Is current and time delay T settings for a type of time delay (standard inverse, very inverse, extremely inverse), find the operation time for a current value IA. On the standard curve of the same type, read the operation time tsA that corresponds to the relative current IA/Is and the operation time Ts10 that corresponds to the relative current **I/Is = 10.**
The operation time tA for the current IA with the Is and T settings is **tA = tsA x T/Ts10.**

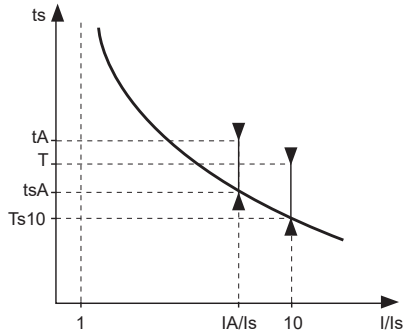

Another practical method:
the table below gives the values of **K = ts/Ts10** as a function of **I/Is.**
In the column that corresponds to the type of time delay, read the value **K = tsA/Ts10** on the line for **IA/Is,** the operation time tA for the current IA with the Is and T settings is **tA = K . T.**

Example
Data:
- type of time delay: very inverse time (**VIT**)
- set point: Is
- time delay T = 0.8 s.

Question: What is the operation time for the current IA = 6 Is?
Reading the table: **VIT** column**,** line I/Is = 6, therefore k = 1.8

Answer: The operation time for the current IA is t = 1.80 x 0.8 = 1.44 s.

Table of K values

I/Is	SIT and IEC/A	VIT, LTI and IEC/B	EIT and IEC/C	UIT	RI	IEEE MI (IEC/D)	IEEE VI (IEC/E)	IEEE EI (IEC/F)	IAC I	IAC VI	IAC EI
1.0	–	–	–	–	3 .062	–	–	–	62.005	62.272	200.226
1.1	24.700 (1)	90.000 (1)	471.429 (1)	–	2.534	22.461	136.228	330.606	19.033	45.678	122.172
1.2	12.901	45.000	225.000	545.905	2.216	11.777	65.390	157.946	9.413	34.628	82.899
1.5	5.788	18.000	79.200	179.548	1.736	5.336	23.479	55.791	3.891	17.539	36.687
2.0	3.376	9.000	33.000	67.691	1.427	3.152	10.199	23.421	2.524	7.932	16.178
2.5	2.548	6.000	18.857	35.490	1.290	2.402	6.133	13.512	2.056	4.676	9.566
3.0	2.121	4.500	12.375	21.608	1.212	2.016	4.270	8.970	1.792	3.249	6.541
3.5	1.858	3.600	8.800	14.382	1.161	1.777	3.242	6.465	1.617	2.509	4.872
4.0	1.676	3.000	6.600	10.169	1.126	1.613	2.610	4.924	1.491	2.076	3.839
4.5	1.543	2.571	5.143	7.513	1.101	1.492	2.191	3.903	1.396	1.800	3.146
5.0	1.441	2.250	4.125	5.742	1.081	1.399	1.898	3.190	1.321	1.610	2.653
5.5	1.359	2.000	3.385	4.507	1.065	1.325	1.686	2.671	1.261	1.473	2.288
6.0	1.292	1.800	2.829	3.616	1.053	1.264	1.526	2.281	1.211	1.370	2.007
6.5	1.236	1.636	2.400	2.954	1.042	1.213	1.402	1.981	1.170	1.289	1.786
7.0	1.188	1.500	2.063	2.450	1.033	1.170	1.305	1.744	1.135	1.224	1.607
7.5	1.146	1.385	1.792	2.060	1.026	1.132	1.228	1.555	1.105	1.171	1.460
8.0	1.110	1.286	1.571	1.751	1.019	1.099	1.164	1.400	1.078	1.126	1.337
8.5	1.078	1.200	1.390	1.504	1.013	1.070	1.112	1.273	1.055	1.087	1.233
9.0	1.049	1.125	1.238	1.303	1.008	1.044	1.068	1.166	1.035	1.054	1.144
9.5	1.023	1.059	1.109	1.137	1.004	1.021	1.031	1.077	1.016	1.026	1.067
10.0	1.000	1.000	1.000	1.000	1.000	1.000	1.000	1.000	1.000	1.000	1.000
10.5	0.979	0.947	0.906	0.885	0.996	0.981	0.973	0.934	0.985	0.977	0.941
11.0	0.959	0.900	0.825	0.787	0.993	0.963	0.950	0.877	0.972	0.957	0.888
11.5	0.941	0.857	0.754	0.704	0.990	0.947	0.929	0.828	0.960	0.939	0.841
12.0	0.925	0.818	0.692	0.633	0.988	0.932	0.912	0.784	0.949	0.922	0.799
12.5	0.910	0.783	0.638	0.572	0.985	0.918	0.896	0.746	0.938	0.907	0.761
13.0	0.895	0.750	0.589	0.518	0.983	0.905	0.882	0.712	0.929	0.893	0.727
13.5	0.882	0.720	0.546	0.471	0.981	0.893	0.870	0.682	0.920	0.880	0.695
14.0	0.870	0.692	0.508	0.430	0.979	0.882	0.858	0.655	0.912	0.868	0.667
14.5	0.858	0.667	0.473	0.394	0.977	0.871	0.849	0.631	0.905	0.857	0.641
15.0	0.847	0.643	0.442	0.362	0.976	0.861	0.840	0.609	0.898	0.846	0.616
15.5	0.836	0.621	0.414	0.334	0.974	0.852	0.831	0.589	0.891	0.837	0.594
16.0	0.827	0.600	0.388	0.308	0.973	0.843	0.824	0.571	0.885	0.828	0.573
16.5	0.817	0.581	0.365	0.285	0.971	0.834	0.817	0.555	0.879	0.819	0.554
17.0	0.808	0.563	0.344	0.265	0.970	0.826	0.811	0.540	0.874	0.811	0.536
17.5	0.800	0.545	0.324	0.246	0.969	0.819	0.806	0.527	0.869	0.804	0.519
18.0	0.792	0.529	0.307	0.229	0.968	0.812	0.801	0.514	0.864	0.797	0.504
18.5	0.784	0.514	0.290	0.214	0.967	0.805	0.796	0.503	0.860	0.790	0.489
19.0	0.777	0.500	0.275	0.200	0.966	0.798	0.792	0.492	0.855	0.784	0.475
19.5	0.770	0.486	0.261	0.188	0.965	0.792	0.788	0.482	0.851	0.778	0.463
20.0	0.763	0.474	0.248	0.176	0.964	0.786	0.784	0.473	0.848	0.772	0.450

***(1)** Values only suitable for IEC A, B and C curves.*

General
Tripping curves

Standard inverse time (SIT) curve
Very inverse time (VIT or LTI) curve
RI curve

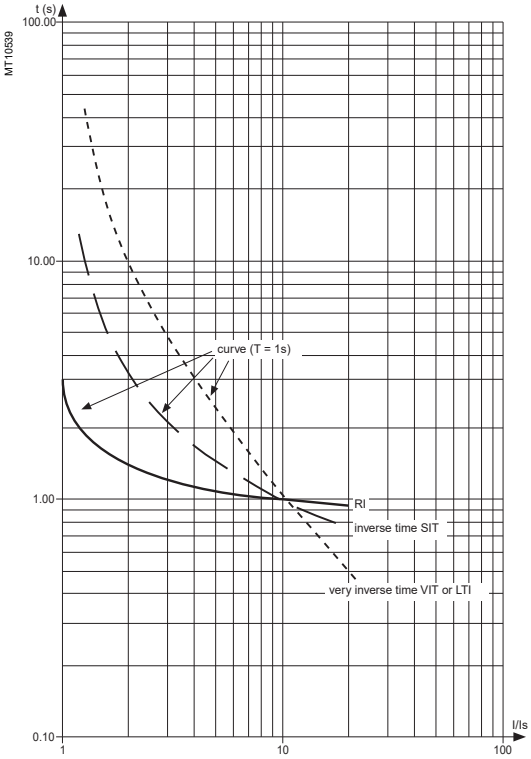

Extremely inverse time (EIT) curve
Ultra inverse time (UIT) curve

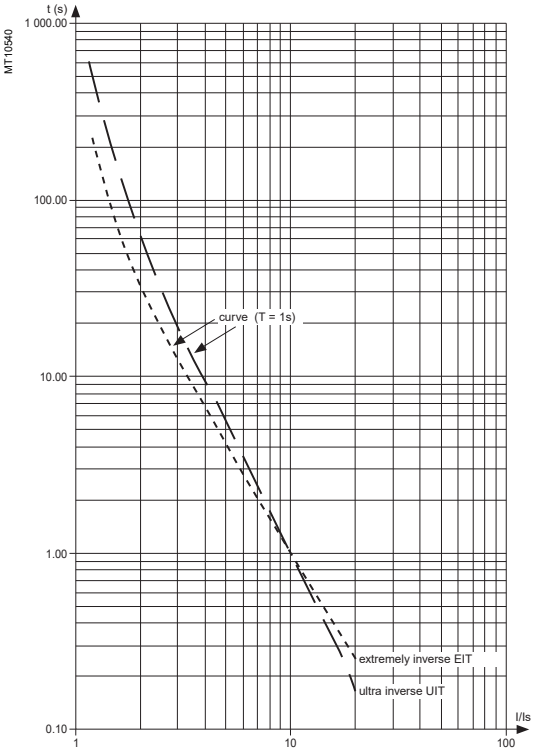

IEEE curves

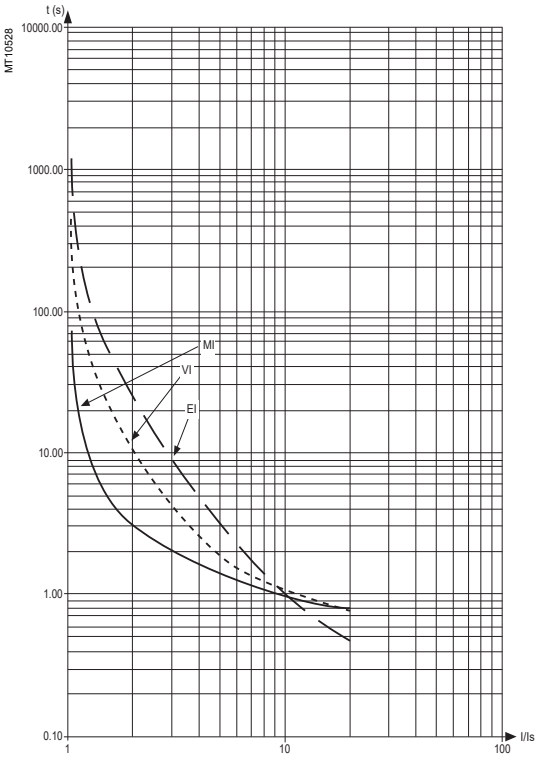

IAC curves

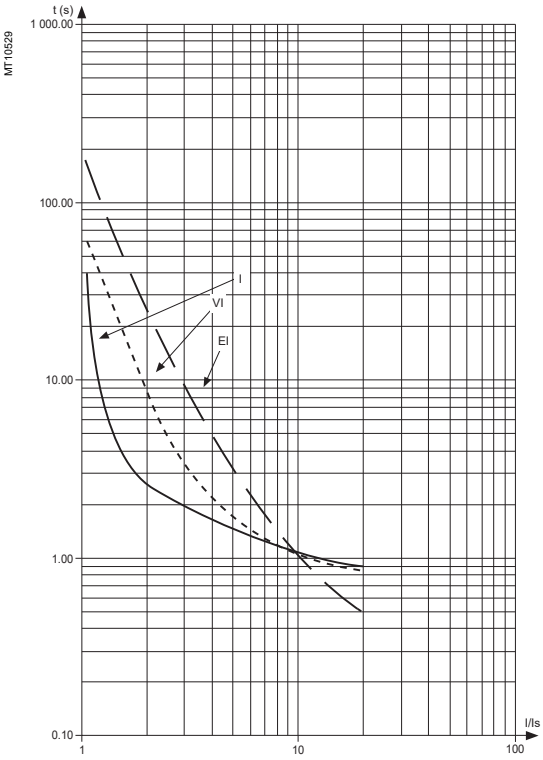

Contents

Description	**80**
Definition of symbols	**81**
Assignment of logic inputs / outputs	**82**
Circuit breaker / contactor control	**83**
Logic discrimination	**87**
Disturbance recording triggering	**89**
Switching of groups of settings	**90**
Indications	**91**
Control matrix	**93**
Self-tests and fail-safe position	**94**

Description

Sepam performs the control and monitoring functions required for electrical network operation.

Predefined functions

The main control and monitoring functions are predefined and fit the most frequent cases of use. They are ready to use and are implemented by simple parameter setting after the necessary logic inputs / outputs are assigned.
The predefined control and monitoring functions can be adapted for particular needs by customization of the control matrix using the SFT2841 software.

Control matrix

The control matrix is a simple way to assign data from:
- ■ protection functions
- ■ predefined control and monitoring functions
- ■ logic inputs

to the following output data:
- ■ output relays
- ■ 9 LEDs on the front panel of Sepam
- ■ triggering of disturbance recording.

Operating principle

The processing of each control and monitoring function may be broken down into 3 phases:
- ■ acquisition of input data:
- □ results of protection function processing
- □ external logic data, connected to the logic inputs of an optional MES114 input / output module
- □ remote control orders (TC) received via the communication link
- ■ actual processing of the control and monitoring function
- ■ utilization of the processing results:
- □ activation of output relays to control an actuator
- □ information sent to the facility manager:
  - by message and/or LED on the Sepam display and SFT2841 software
  - by remote indication (TS) via the communication link.

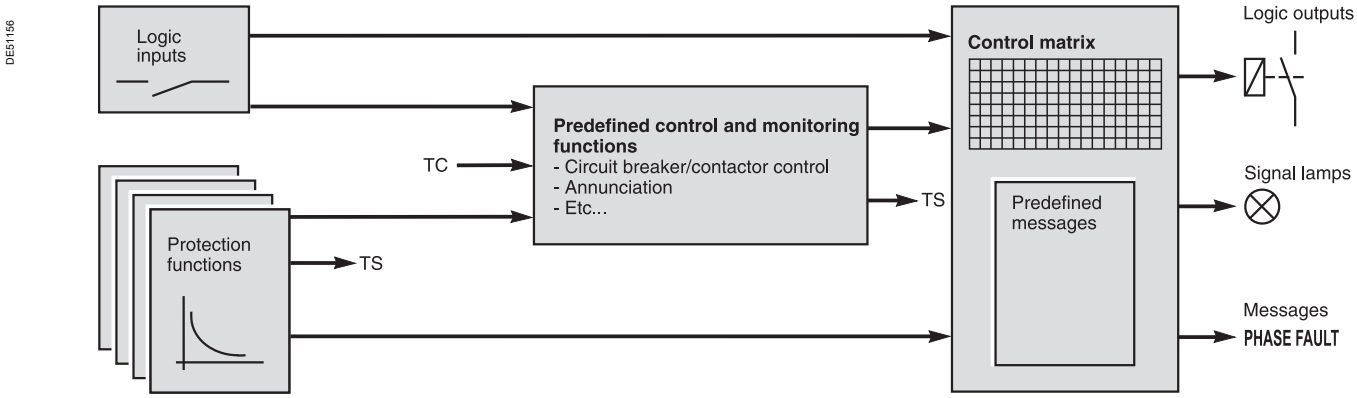

Logic inputs and outputs

The number of Sepam inputs / outputs must be adapted to fit the control and monitoring functions used.
The 4 outputs included in the Sepam series 20 base unit may be extended by adding one MES114 modules with 10 logic inputs and 4 output relays.
After selecting the MES114 type required by an application, the logic inputs must be assigned to functions.

Definition of symbols

The symbols used in the different block diagrams describing the control and monitoring functions are defined on this page.

Logic functions

■ **"OR"**

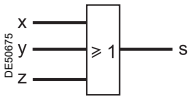

Equation: S = X + Y + Z.

■ **"AND"**

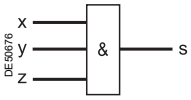

Equation: S = X x Y x Z.

■ **exclusive "XOR"**

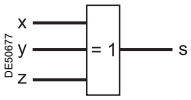

S = 1 if one and only one input is set to 1
(S = 1 if X + Y + Z = 1).

■ **Complement**
These functions may use the complement of one or more input values.

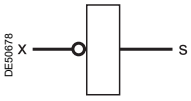

Equation: S = $\overline{X}$ (S = 1 if X = 0).

Delay timers

Two types of delay timers:
■ "on" delay timer: used to delay the appearance of a signal by a time T

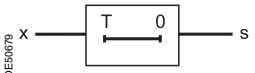

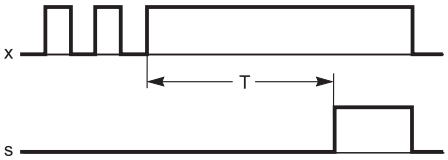

■ "off" delay timer: used to delay the disappearance of a signal by a time T.

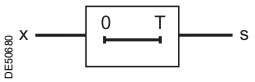

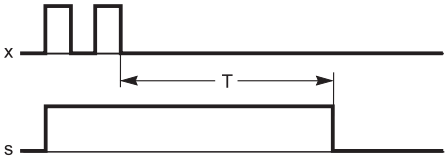

Pulse mode operation

■ "on" pulse: used to create a short-duration pulse (1 cycle) each time a signal appears

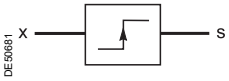

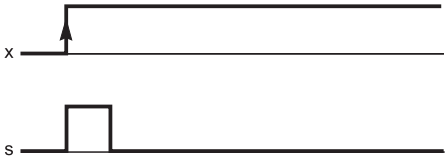

■ "off" pulse: used to create a short-duration pulse (1 cycle) each time a signal disappears.

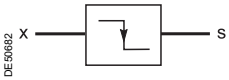

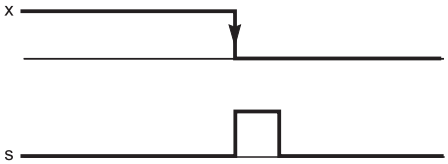

Note: *the disappearance of a signal may be caused by an auxiliary power failure.*

Bistable functions

Bistable functions may be used to store values.

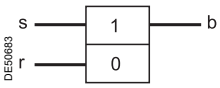

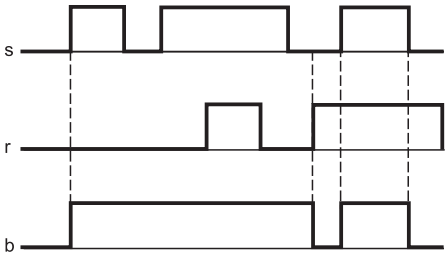

Equation: B = S + $\overline{R}$ x B.

Assignment of logic inputs / outputs

The use of the preset control and monitoring functions requires exclusive parameter setting and particular wiring of the inputs according to their application and the type of Sepam.
The advanced UMI or the SFT2841 software may be used to assign inputs and set the control and monitoring function parameters.
Since an input may only be assigned to a single function, not all the functions are available at the same time.
Example: if the logic discrimination function is used, the switching of groups of settings function may not be used.

Table of input/output assignment by application

Functions	S20	S24	T20	T24	M20	B21 - B22	Assignment
Logic inputs							
Open position	■	■	■	■	■	■	I11
Closed position	■	■	■	■	■	■	I12
Logic discrimination, receive blocking input	■	■	■	■			I13
Switching of groups of settings A/B	■	■	■	■	■		
External reset	■	■	■	■	■	■	I14
External tripping 4 (1)	■	■	■	■	■	■	
External tripping 1 (1)	■	■	■ (2)	■ (2)	■	■	I21
External network synchronization	■	■	■	■	■	■	
External tripping 2 (1)	■		■ (3)		■	■	I22
Motor reacceleration					■		
Downstream load Start up		■		■			
External tripping 3 (1)	■	■	■ (4)	■ (4)	■	■	I23
Buchholz alarm (1) (Buchholz alarm message)			■	■			
Rotor rotation detection					■		
Thermistor tripping (1)			■	■	■		
Inhibit earth fault protection		■					
End of charging position	■	■	■	■	■		I24
Thermostat alarm (1) (thermostat alarm message)			■	■			
Thermistor alarm (1)			■	■	■		
External tripping 5 and 50BF activation (1)		■(1)		■(1)			
Inhibit remote control, excluding TC1 (1)	■	■	■	■	■	■	I25
Inhibit remote control, including TC1 (1)	■	■	■	■	■	■	
SF6-1	■	■	■	■	■	■	
SF6-2	■	■	■	■	■	■	I26
Change of thermal settings			■	■	■		
Inhibit thermal overload			■	■	■		
Inhibit recloser	■	■					
Logic outputs							
Tripping	■	■	■	■	■	■	O1
Inhibit closing	■	■	■	■	■	■	O2
Watchdog	■	■	■	■	■	■	O4
Close order	■	■	■	■	■	■	O11

Note: *all of the logic inputs are available via the communication link and are accessible in the SFT2841 control matrix for other non predefined applications.*

(1) *These inputs have parameter setting with the prefix "NEG" for undervoltage type operation.*
(2) *Buchholz/Gas trip message.*
(3) *Thermostat trip message.*
(4) *Pressure trip message.*

Circuit breaker / contactor control
ANSI code 94/69

Description

Sepam may be used to control breaking devices equipped with different types of closing and tripping coils.
■ circuit breaker with shunt trip or undervoltage tripping coil (parameter set on the front of the advanced UMI or in SFT2841)
■ latching contactor with shunt trip coil.
Two breaking device control modes are available:
■ **use of operating mechanism integrated in the circuit breaker / contactor**
This logical function processes all the circuit breaker closing and tripping conditions based on:
□ breaking device status information
□ remote control orders
□ protection functions
□ specific program logic for each application (e.g. recloser)
□ etc.
This function also inhibits closing of the breaking device according to the operating conditions.
■ **use of customized program logic**
A control and monitoring resource assignment matrix may be used to create customized program logic.

Operating mechanism integrated in the circuit breaker / contactor

For operation in accordance with the block diagram, the Sepam must have the logic inputs required (an MES114 module must therefore be included) and the related parameter setting and wiring must be done.

Remote control
Circuit breaker/contactor tripping can be controlled remotely via the communication link using the following remote control orders:
■ TC1: Circuit breaker/contactor tripping
■ TC2: Circuit breaker/contactor closing
■ TC5: Sepam acknowledgment (reset)
These orders can be globally inhibited by logic input I25.
According to the parameter setting of logic input I25, the tripping remote control order TC1 can be activated at any time or it can be inhibited.

TS/TC equivalence for each protocol

Modbus	DNP3	IEC 60870-5-103	IEC 61850
TC	**Binary Output**	**ASDU, FUN, INF**	**LN.DO.DA**
TC1	BO0	20, 21, 1 (OFF)	CSWI1.POS.ctlVal
TC2	BO1	20, 21, 1 (ON)	CSWI1.POS.ctlVal
TC5	BO2	20, 160, 19	LLN0.LEDRs.ctlVal

Circuit breaker / contactor control with lockout function (ANSI 86)

The ANSI 86 function traditionally performed by lockout relays may be carried out by Sepam using the predefined Circuit breaker / contactor control function, with latching of all tripping conditions (protection function outputs and logic inputs).
With this function, Sepam performs the following:
■ grouping of all tripping conditions and breaking device control
■ latching of the tripping order with inhibition of closing until the cause of tripping disappears and is acknowledged by the user (see "Latching / acknowledgment")
■ indication of the cause of tripping:
□ locally by signal lamps ("Trip" and others) and by messages on the display
□ remotely by remote indications.

Block diagram (1): Sepam S20, S23, S24, T20, T23, T24 or M20

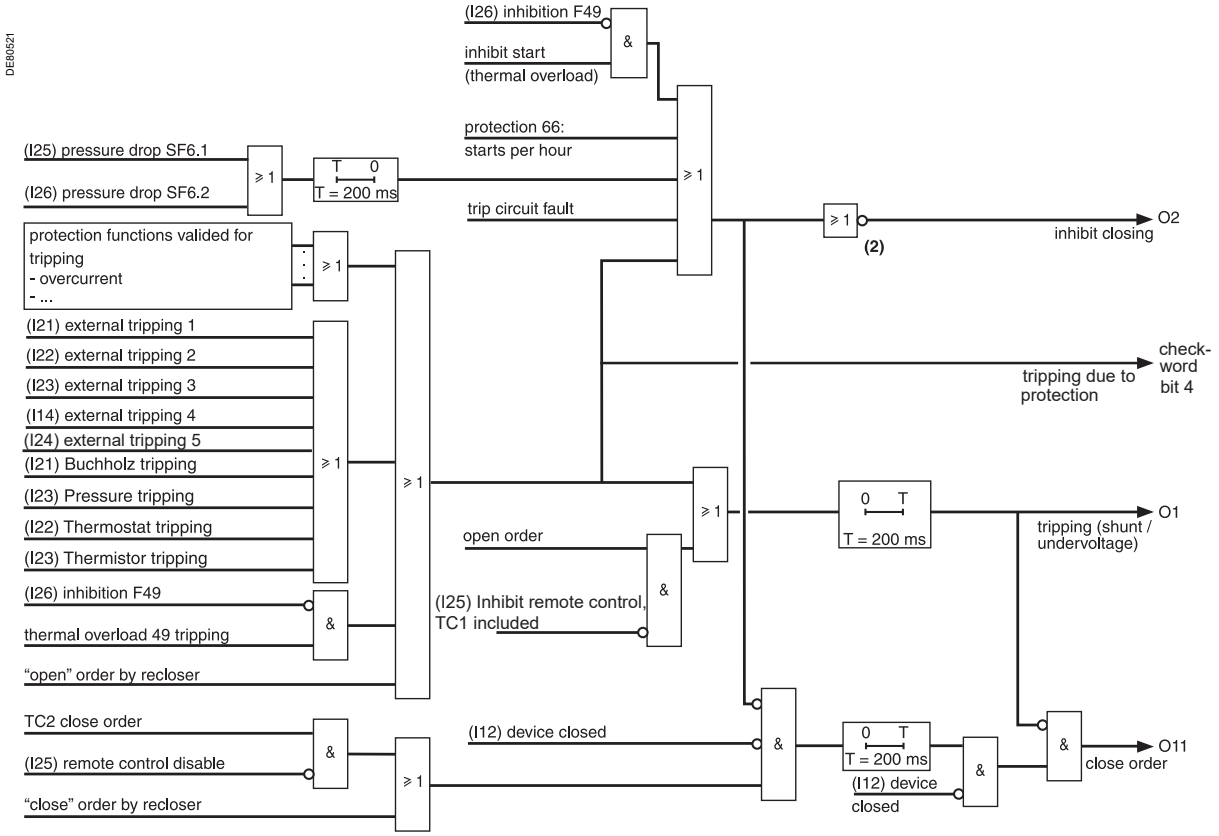

Block diagram (1): Sepam B21 (3) or B22

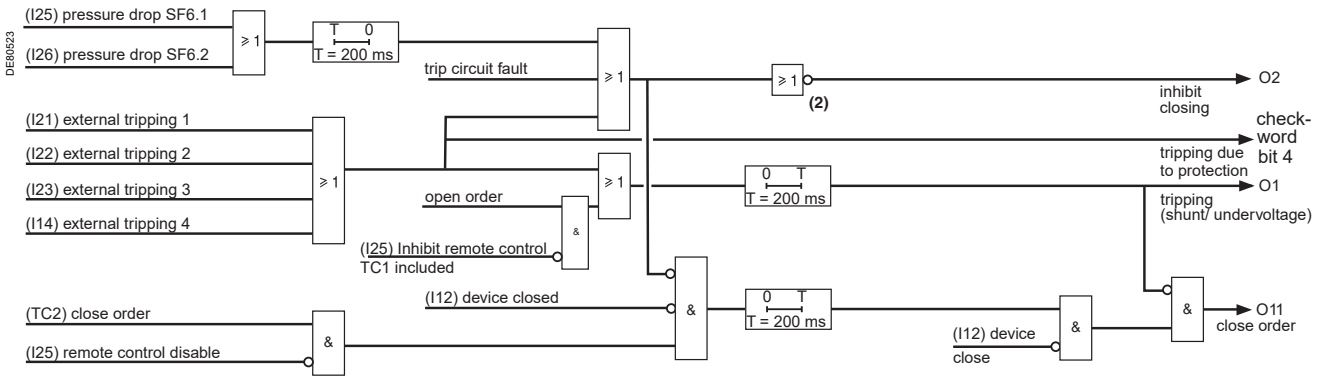

(1) The information used in the logic depends on the Sepam type, the presence of MES114 options and the parameter settings.
(2) Usual scenario corresponding to the O2 "undervoltage" parameter setting.
(3) Performs B20 type functions.

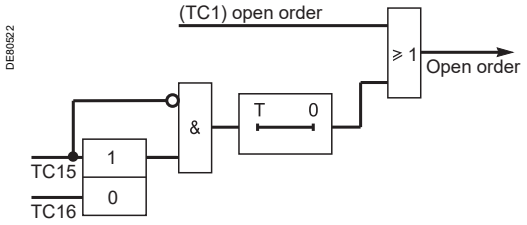

Monitoring Modbus S-LAN communication

Description

The Monitoring Modbus S-LAN communication function is used to trip the circuit-breaker in the event of loss of communication with the Modbus master.
This function is inhibited by default. It is activated with remote control order TC15 and can be inhibited after activation with remote control order TC16. Activation of this function is saved on loss of the auxiliary power supply.
Loss of communication with the Modbus master is detected by the Sepam unit when remote control order TC15 has not been rewritten by the Modbus master at the end of an adjustable time delay T.
The value of time delay T is set by the Modbus communication to address 01F4. The setting range for the time delay is between 1 and 6553 s, in 0.1 s steps (default value 10 s).

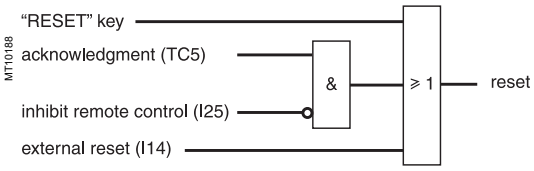

Latching / acknowledgment

Description

The tripping outputs of all the protection functions and all the logic inputs may be latched individually.
Logic outputs may not be latched. The logic outputs set up in pulse mode maintain pulse-type operation, even when linked to latched data.
Latched data are saved in the event of a power failure.
All latched data may be acknowledged locally on the UMI, or remotely by means of a logic input or via the communication link.
The "Latching / acknowledgment" function associated with the "Circuit breaker / contactor control" function may be used to perform the ANSI 86 "lockout relay" function.

TS/TC equivalence for each protocol

Modbus	DNP3	IEC 60870-5-103	IEC 61850
TC	**Binary Output**	**ASDU, FUN, INF**	**LN.DO.DA**
TC5	BO2	20, 160, 19	LLN0.LEDRs.ctlVal

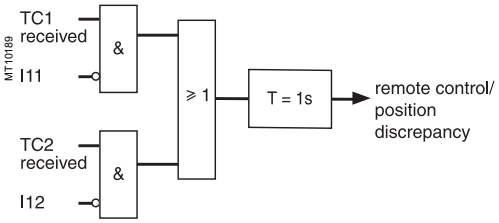

TC/circuit breaker position discrepancy

Description

This function detects a discrepancy between the last remote control order received and the actual position of the circuit breaker.
The information is accessible via remote indication TS42.

TS/TC equivalence for each protocol

Modbus	DNP3	IEC 60870-5-103	IEC 61850
TS	**Binary Input**	**ASDU, FUN, INF**	**LN.DO.DA**
TS42	BI7 (B2X)	-	-
	BI9 (Others)	-	-
TC	**Binary Output**	**ASDU, FUN, INF**	**LN.DO.DA**
TC1	BO0	20, 21, 1 (OFF)	CSWI1.POS.ctlVal
TC2	BO1	20, 21, 1 (ON)	CSWI1.POS.ctlVal

Tripping

Description

Trip information can be accessed via the remote indication for Sepam check-word, bit 4. It indicates whether a Sepam internal or external protection has tripped.

TS/TC equivalence for each protocol

Modbus	DNP3	IEC 60870-5-103	IEC 61850
	Binary Input	**ASDU, FUN, INF**	**LN.DO.DA**
Check-word, bit 4	BI35 (B2X)	2, 160, 68	PTRC1.Tr
	BI61 (Others)	2, 160, 68	PTRC1.Tr

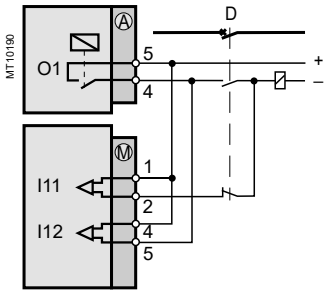

Wiring for shunt trip unit.

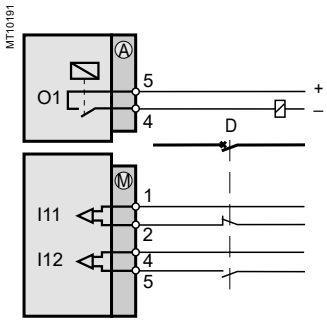

Wiring for undervoltage trip unit.

Trip circuit supervision and open / closed matching

Description

This supervision is designed for trip circuits:

■ with shunt trip units

The function detects:

□ circuit continuity

□ loss of supply

□ mismatching of position contacts.

The function inhibits closing of the breaking device.

■ with undervoltage trip units

The function detects mismatching of position contacts, coil supervision being unnecessary in this case.

The information is accessible in the matrix and via the remote indication TS43.

Block diagram (1)

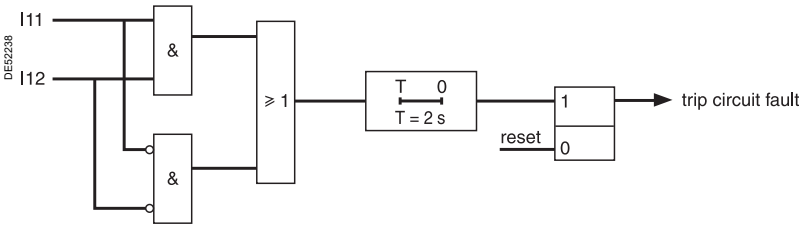

***(1)** With MES option.*
The function is activated if inputs I11 and I12 are set respectively as circuit breaker "open position" and circuit breaker "closed position".

TS/TC equivalence for each protocol

Modbus	DNP3	IEC 60870-5-103	IEC 61850
TS	**Binary Input**	**ASDU, FUN, INF**	**LN.DO.DA**
TS43	BI6 (B2X)	1, 160, 36	XCBR1.EEHealth.stVal
	BI8 (Others)	1, 160, 36	XCBR1.EEHealth.stVal

Open and close order supervision

Description

Following a circuit breaker open or close order, the system checks whether, after a 200 ms time delay, the circuit breaker has actually changed status.

If the circuit breaker status does not match the last order sent, a "Control fault" message and remote indication TS45 are generated.

TS/TC equivalence for each protocol

Modbus	DNP3	IEC 60870-5-103	IEC 61850
TS	**Binary Input**	**ASDU, FUN, INF**	**LN.DO.DA**
TS45	BI5 (B2X)	1, 20, 5	Command Termination -
	BI7 (Others)	1, 20, 5	Command Termination -

Logic discrimination
ANSI code 68

Description

This function provides:
- full tripping discrimination
- a substantial reduction in delayed tripping of the circuit breakers located nearest the source (drawback of the classical time-based discrimination process).

The system applies to the definite time (DT) and IDMT phase overcurrent and earth fault protection functions.

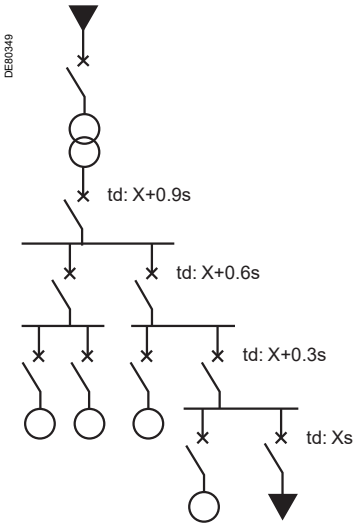

e.g.: Radial distribution with use of time-based discrimination (td: tripping time definite time curves).

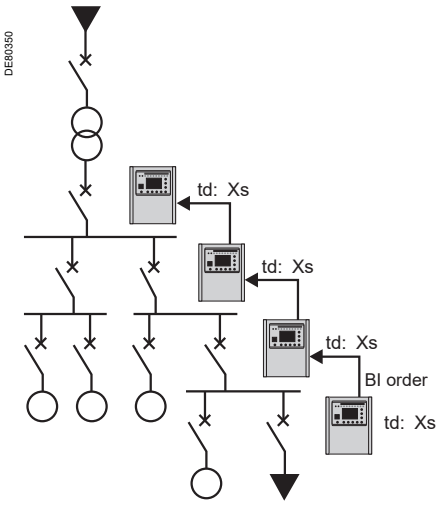

e.g.: radial distribution with use of the Sepam logic discrimination system.

With this type of system, time delays are set in accordance with the device to be protected, without any concern for the discrimination aspect.

Operating principle

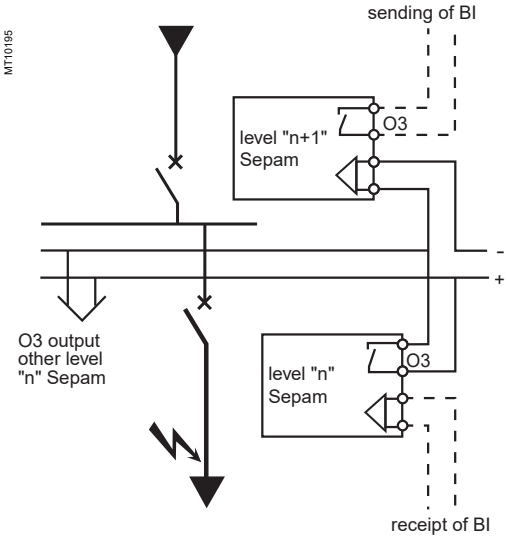

When a fault occurs in a radial network, the fault current flows through the circuit between the source and the location of the fault:
- the protection units upstream from the fault are triggered
- the protection units downstream from the fault are not triggered
- only the first protection unit upstream from the fault should trip.

Each Sepam is capable of sending and receiving blocking input orders except for motor Sepams (1) which can only send blocking input orders.
When a Sepam is triggered by a fault current:
- it sends a blocking input order to output O3 (2)
- it trips the associated circuit breaker if it does not receive a blocking input order on the blocking input logic input (3).

The sending of the blocking input lasts the time it takes to clear the fault.
It is interrupted after a time delay that takes into account the breaking device operating time and protection unit reset time.
This system minimizes the duration of the fault, optimizes discrimination and guarantees safety in downgraded situations (wiring or switchgear failure).

Pilot wire test

The pilot wire test may be performed using the output relay test function.

(1) *Motor Sepams are not affected by the receipt of a blocking input since they are designed for loads only.*
(2) *Default parameter setting.*
(3) *According to parameter setting and presence of an additional MES114 module.*

Block diagram: Sepam S20, S23, S24, T20, T23 and T24

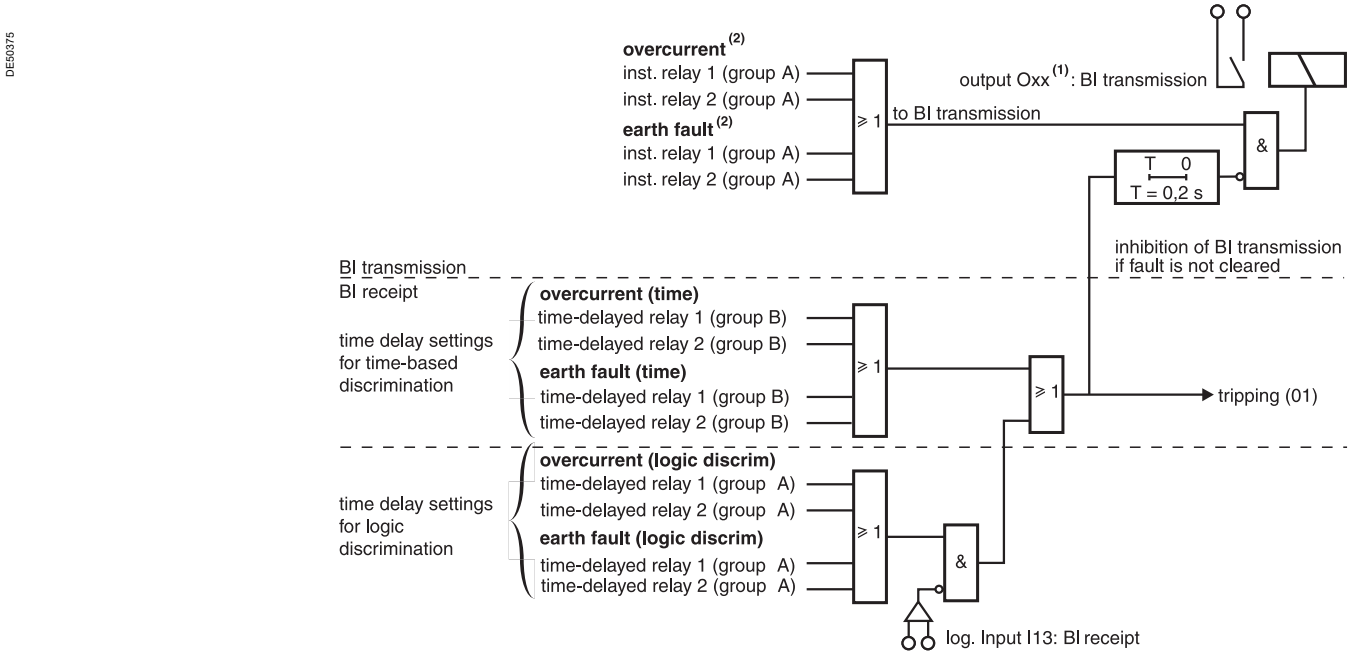

Block diagram: Sepam M20

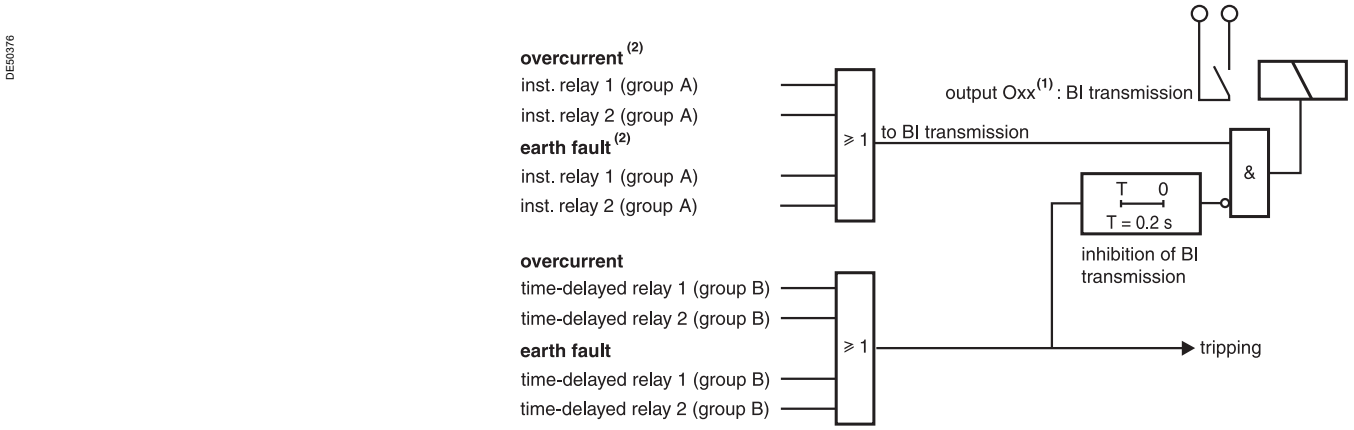

***(1)** According to parameter setting (O3 by default).*
***(2)** Instantaneous action (inst) corresponds to protection "pick-up" signal information.*

Disturbance recording triggering

Description

The recording of analog and logic signals may be triggered by different events, according to control matrix parameter setting or by manual action:

- triggering by the grouping of all pick-up signals of the protection functions in service
- triggering by the delayed outputs of selected protection functions
- triggering by selected logic inputs
- manual triggering by a remote control order (TC10)
- manual triggering via the SFT2841 software tool.

Disturbance recording may be:

- inhibited via the SFT2841 software or by remote control order (TC8)
- validated via the SFT2841 software or by remote control order (TC9).

Block diagram

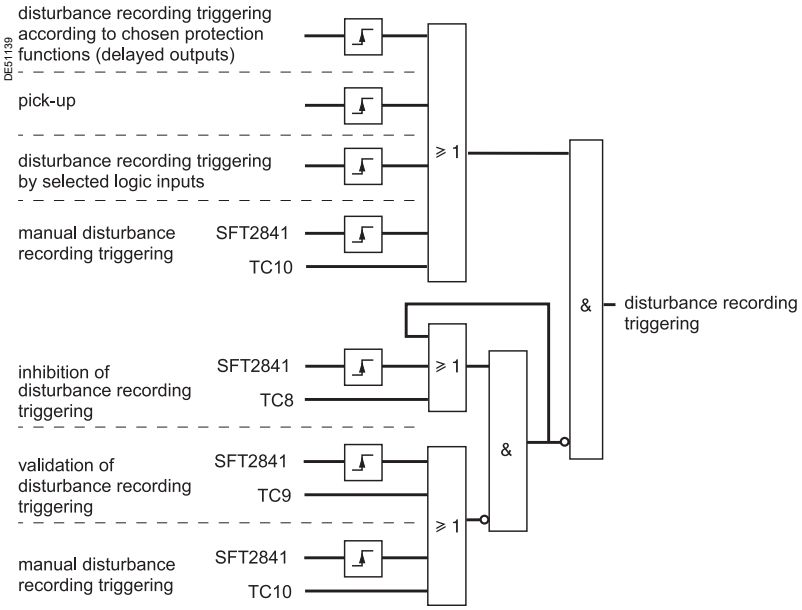

TS/TC equivalence for each protocol

Modbus	DNP3	IEC 60870-5-103	IEC 61850
TC	**Binary Output**	**ASDU, FUN, INF**	**LN.DO.DA**
TC8	BO03	-	RDRE1.RcdInh.ctlVal
TC9	BO04	-	RDRE1.RcdInh.ctlVal
TC10	BO04	-	RDRE1.RcdTrg.ctlVal

Switching of groups of settings

Description

There are 4 relays for the phase overcurrent and earth fault protection functions, split into two groups of 2 relays, called group A and group B respectively.
The use of the protection relays is determined by parameter setting.
The switching of groups of settings function enables the group A or group B protection functions to be activated:

- according to the status of logic input I13
  - I13 = 0: activation of group A
  - I13 = 1: activation of group B
- or via the communication link
  - TC3: activation of group A
  - TC4: activation of group B.

The use of the switching of groups of settings functions does not exclude the use of the logic discrimination function.

Block diagram

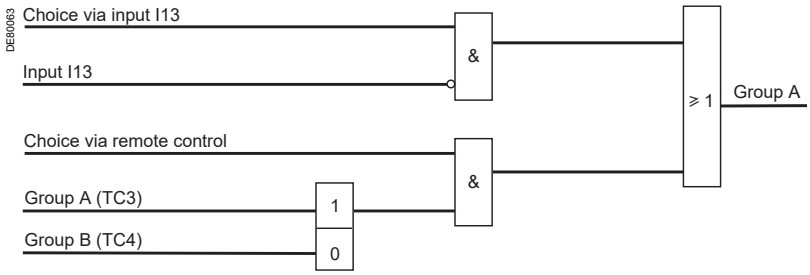

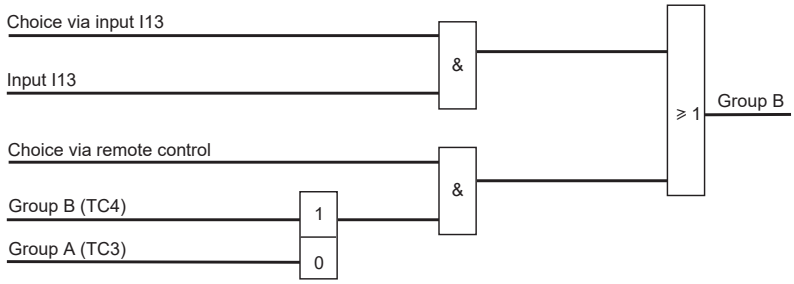

TS/TC equivalence for each protocol

Modbus	DNP3	IEC 60870-5-103	IEC 61850
TC	**Binary Output**	**ASDU, FUN, INF**	**LN.DO.DA**
TC8	BO03	-	RDRE1.RcdInh.ctlVal
TC9	BO04	-	RDRE1.RcdInh.ctlVal
TC10	BO05	-	RDRE1.RcdTrg.ctlVal

Indications
ANSI code 30

Events may be indicated on the front panel of Sepam by:
- appearance of a message on the display of the advanced UMI
- lighting up of one of the 9 yellow signal lamps.

Message type indication

Predefined messages
All the messages connected to the standard Sepam functions are predefined and available in two language versions:
- in English, factory messages, not modifiable
- in the local language, according to the version delivered.

The language version is chosen at the time of Sepam parameter setting.
The messages are visible on the display units of Sepams equipped with the advanced UMI and in the SFT2841 Alarms screen.
- the number and type of predefined messages depend on type of Sepam. The table below gives the complete list of all predefined messages.

List of messages (1)

Functions	English (factory)	French
Phase overcurrent	PHASE FAULT	DEFAUT PHASE
Earth fault	EARTH FAULT	DEFAUT TERRE
Inhibit earth fault overcurrent	E/F PROT. INHIBIT	INHIB. P^{ROT} TERRE
Breaker failure	BREAKER FAILURE	DEF. DISJONCT.
Thermal overload	THERMAL ALARM	ECHAUF^{T}. ALARME
	THERMAL TRIP	ECHAUF^{T}. DECL^{T}.
	START INHIBIT	DEMARRAGE INHIBE
Negative sequence / unbalance	UNBALANCE	DESEQUILIBRE
Locked rotor /	ROTOR BLOCKING	BLOCAGE ROTOR
Locked rotor on start	ST^{RT} LOCKED ROT^{R}.	BLOC ROTOR DEM
Excessive starting time	LONG START	DEMARRAGE LONG
Starts per hour	START INHIBIT	DEMARRAGE INHIBE
Phase undercurrent	UNDER CURRENT	COURANT <<
Phase-to-phase overvoltage	OVERVOLTAGE	TENSION >>
Phase-to-phase undervoltage	UNDERVOLTAGE	TENSION <<
Positive sequence undervoltage	UNDERVOLTAGE	TENSION <<
Phase-to-neutral undervoltage	UNDERVOLT. V1	TENSION << V1
	UNDERVOLT. V2	TENSION << V2
	UNDERVOLT. V3	TENSION << V3
Neutral voltage displacement	Vo FAULT	DEFAUT Vo
Overfrequency	OVER FREQ.	FREQUENCE >>
Underfrequency	UNDER FREQ.	FREQUENCE <<
Rate of change of frequency	ROCOF	DERIV. FREQ.
Temperature monitoring (2)	OVER TEMP. ALM	T° ALARME
	OVER TEMP. TRIP	T°. DECL^{T}.
	RTD'S FAULT	DEFAUT SONDES
Thermostat (3)	THERMOS^{T}. ALARM	THERM^{OT}. ALARME
	THERMOS^{T}. TRIP	THERMOS^{T}. DECL^{T}.
Buchholz (3)	BUCHHOLZ ALARM	BUCHH ALARME
	BUCHH/GAS TRIP	BUCHH/GAZ DECL^{T}.
Pressure (3)	PRESSURE TRIP	PRESSION DECL^{T}.
Thermistor PTC/NTC	THERMIS^{T}. ALARM	THERM^{IST}. ALARME
	THERMIS^{T}. TRIP	THERMIS^{T}. DECL^{T}.
Trip circuit supervision	TRIP CIRCUIT	CIRCUIT DECL^{T}.
Circuit breaker / contactor control	CONTROL FAULT	DEFAUT COM^{DE}.
Recloser	PERMANENT FAULT	DEFAUT PERMAN^{T}.
Recloser	CLEARED FAULT	DEFAUT ELIMINE

(1) *According to type of Sepam and Sepam equipped with advanced UMI, or SFT2841. Messages by default, the wording of the messages may be changed (please consult us).*
(2) *RTD fault message: refer to the maintenance chapter.*
(3) *According to parameter setting of the logic inputs I21 to I24 (T20, T23, T24 type).*

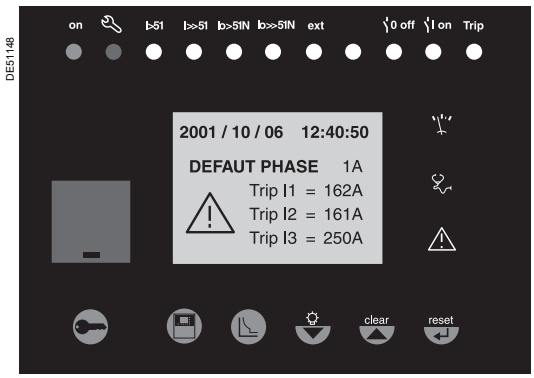

Alarm message on the advanced UMI.

Message processing on the advanced UMI display

When an event occurs, the related message appears on the advanced UMI display.

The user presses the clear key to clear the message and be able to consult all the advanced UMI screens in the normal fashion.

The user must press the reset key to acknowledge latched events (e.g. protection outputs).

The list of messages remains accessible in the alarm history (key), in which the last 64 messages are stored.

To delete the messages stored in the alarm history:

- display the alarm history on the advanced UMI
- press the clear key.

Signal lamp type indication

The 9 yellow signal lamps on the front of Sepam are assigned by default to the following events:

Signal lamp	Event	Label on front panel
LED 1	Tripping of protection 50/51 unit 1	I>51
LED 2	Tripping of protection 50/51 unit 2	I>>51
LED 3	Tripping of protection 50N/51N unit 1	Io>51N
LED 4	Tripping of protection 50N/51N unit 2	Io>>51N
LED 5		Ext
LED 6		
LED 7	Circuit breaker open (I11) (1)	0 off
LED 8	Circuit breaker closed (I12) (1)	I on
LED 9	Tripping by circuit breaker control	Trip

***(1)** Assignment by default with MES114.*

The default parameter setting may be personalized using the SFT2841 software:

- the assignment of signal lamps to events is to be defined in the control matrix screen
- editing and printing of personalized labels are proposed in the "Sepam" menu.

Control matrix

PE50810

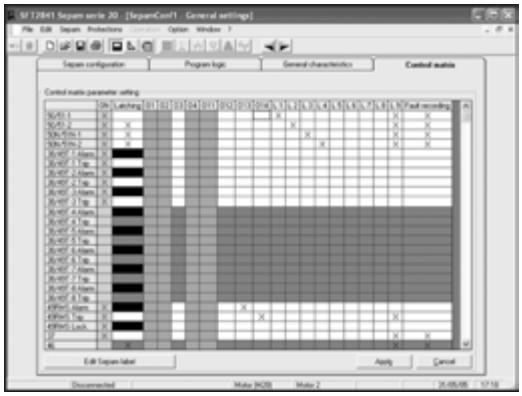

SFT2841: control matrix.

The control matrix is used for simple assignment of the logic outputs and signal lamps to information produced by the protection units, program logic and logic inputs. Each column creates a logic OR between all the lines selected.
The following data are managed in the control matrix and may be set using the SFT2841 software tool.

Data	Meaning	Comments
All of the application protection functions	Protection time-delayed output and additional outputs when applicable	
79 - cleared fault	The recloser function has sucessfully reclosed	Impulse type output
79 - permanent fault	The circuit breaker is definitively open after the reclosing cycles	Impulse type output
Logic inputs I11 to I14 and I21 to I26	According to configuration	If MES114 module is configured
BI transmission	Sending of the blocking information to the following Sepam in logic discrimination chain	O3 by default
TCS	Trip circuit fault or mismatching of CB position contacts	If the circuit breaker / contactor control function is activated
CB control fault	A circuit breaker open or close order has not been executed	
Sensor fault	Hardware problem on an MET module or on an RTD	
Pick-up	Logical OR of the instantaneous output of all protection units	
Watchdog	Monitoring of Sepam operation	Always on O4 if used

Self-tests and fail-safe position

Presentation

The reliability of a device is the property that allows its users to have well-placed confidence in the service it delivers.

For a Sepam protection relay, operational reliability consists of ensuring the safety and availability of the installation. This means avoiding the following 2 situations:

■ Nuisance tripping of the protection

Continuity of the electrical power supply is as vital for a manufacturer as it is for an electricity distribution company. Nuisance tripping caused by the protection can result in considerable financial losses. This situation affects the availability of the installation.

■ Failure of the protection to trip

The consequences of a fault that is not eliminated can be catastrophic. For safety of operation, the protection relay must detect faults in the power supply as quickly as possible, using discrimination. This situation affects the safety of the installation.

Self-tests and monitoring functions

On initialization and cyclically during operation, Sepam runs a series of self-tests. These self-tests are designed to detect any failure in its internal and external circuits so as to ensure Sepam's reliability. These failures are classified into 2 categories, major failures and minor failures:

■ A major failure reaches the hardware resources used by the protection functions (program memory and analog input for example).

This type of failure risks resulting in failure to trip on a fault or nuisance tripping. In this case, Sepam must go into the fail-safe position as quickly as possible.

■ A minor failure affects Sepam's peripheral functions (display, communication).

This type of failure does not prevent Sepam from protecting the installation and providing continuity of service. Sepam then operates in downgraded mode.

The classification of failures into 2 categories improves both safety and availability of the installation.

The possibility of a Sepam major failure must be taken into account when selecting the trip command type to maximize availability or safety of the installation (see “Selecting the trip command and examples of use” page 97).

In addition to the self-tests, the user can activate the trip circuit and closing circuit supervision function to improve the installation monitoring.

This function sends an alarm message to the Sepam display unit and a data item is automatically available to the communication to alert the user.

Self-tests

The self-tests are run when Sepam is initialized and/or during its operation.

List of self-tests which place Sepam in the fail-safe position

Failures which have caused this are deemed to be major ones.

Function	Test type	Execution period
Power supply		
	Power supply presence	During operation
CPU		
	Processor	On initialization and during operation
	RAM memory	On initialization and during operation
Program memory		
	Checksum	During operation
Parameter memory		
	Checksum	On initialization
Analog inputs		
	Current	During operation
	Voltage	During operation
Connection		
	CCA630, CCA634, CCA670, CCT640	On initialization and during operation
	MES114	On initialization and during operation

List of self-tests which do not place Sepam in the fail-safe position

Failures which have caused this are deemed to be minor ones.

Function	Test type	Execution period
UMI		
	Module presence	On initialization and during operation
Analog output		
	Module presence	On initialization and during operation
Temperature inputs		
	Module presence	On initialization and during operation

Fail-safe position

When Sepam is in working order, it runs self-tests continuously. Detection of a major failure places Sepam in the fail-safe position.

State of Sepam in the fail-safe position

- All the output relays are forced to the idle state
- All protection functions are inhibited
- The watchdog output indicates failure (output in the idle state)
- A red LED on the Sepam front panel is on and a diagnostic message appears on the Sepam display unit (see “Indications” page 91).

How Sepam deals with failures

- Minor failure: Sepam switches to downgraded operation.

The failure is indicated on the Sepam display unit and also by the communication. Sepam continues to protect the installation.

- Major failure: Sepam switches to the fail-safe position and attempts a restart during which it again runs its self-tests. There are 2 possible scenarios:
  - The internal failure is still present. It is a permanent failure. Intervention on Sepam is required. Only removing the cause of the failure, followed by de-energizing and then energizing Sepam, will allow the unit to exit the fail-safe position.
  - The internal failure is no longer present. It is a transient failure. Sepam restarts so that it can continue to protect the installation. Sepam has been in the fail-safe position for 5 to 7 s.

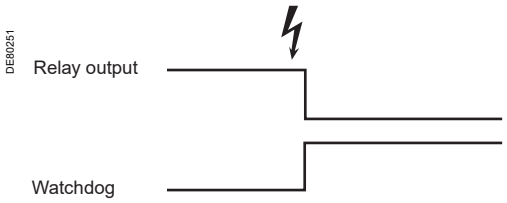

Permanent internal failure.

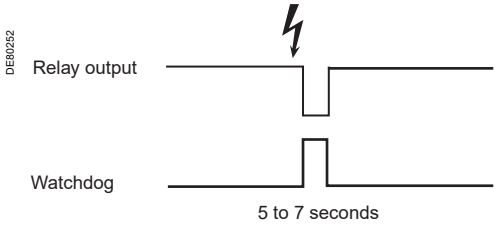

Transient internal failure.

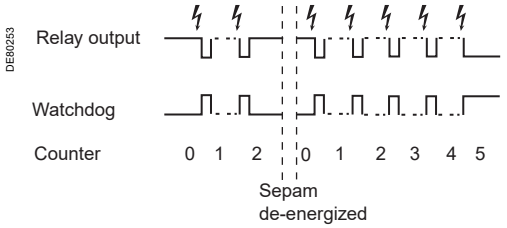

Repeated transient internal failures.

Limiting the number of transient failure detections

Each time a transient internal failure appears, Sepam increments an internal counter. The fifth time the failure occurs, Sepam is placed in the fail-safe position. De-energizing Sepam reinitializes the failure counter. This mechanism can be used to avoid keeping a Sepam running that is subject to repeated transient failures.

Selecting the trip command and examples of use

An analysis of the operational reliability of the whole installation should determine whether availability or safety of this installation should be prioritized if Sepam is in the fail-safe position. This information is used to determine the choice of trip command as outlined in the table below.

NOTICE

RISK OF UNPROTECTED INSTALLATION
Always connect the watchdog output to a monitoring device when the selected trip command does not result in the installation tripping when Sepam fails.

Failure to follow these instructions can result in equipment damage.

Selecting the trip command

Diagram	Control	Event	Trip	Advantage	Disadvantage
1	Shunt trip breaker or mechanical latching contactor	Sepam failure or loss of the auxiliary power supply	No	Availability of the installation	Installation not protected until remedial intervention (1)
2	Breaker with undervoltage trip coil (fail-safe)	Sepam failure or loss of the auxiliary power supply	Yes	Safety of the installation	Installation not available until remedial intervention
3	Breaker with undervoltage trip coil (not fail-safe)	Sepam failure	No	Availability of the installation	Installation not protected until remedial intervention (1)
		Loss of auxiliary power supply	Yes	Safety of the installation	Installation not available until remedial intervention

***(1)** It is essential to use the watchdog, see the warning notice opposite.*

Example of use with shunt trip coil (diagram 1)

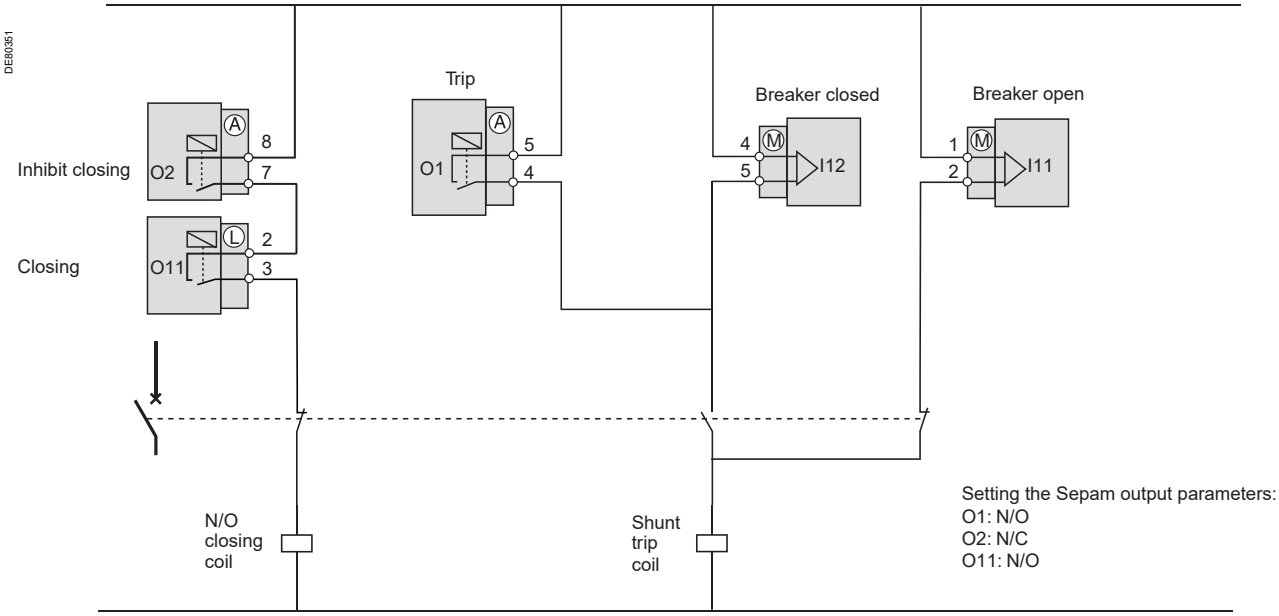

Example of use with undervoltage trip coil with fail-safe condition (diagram 2)

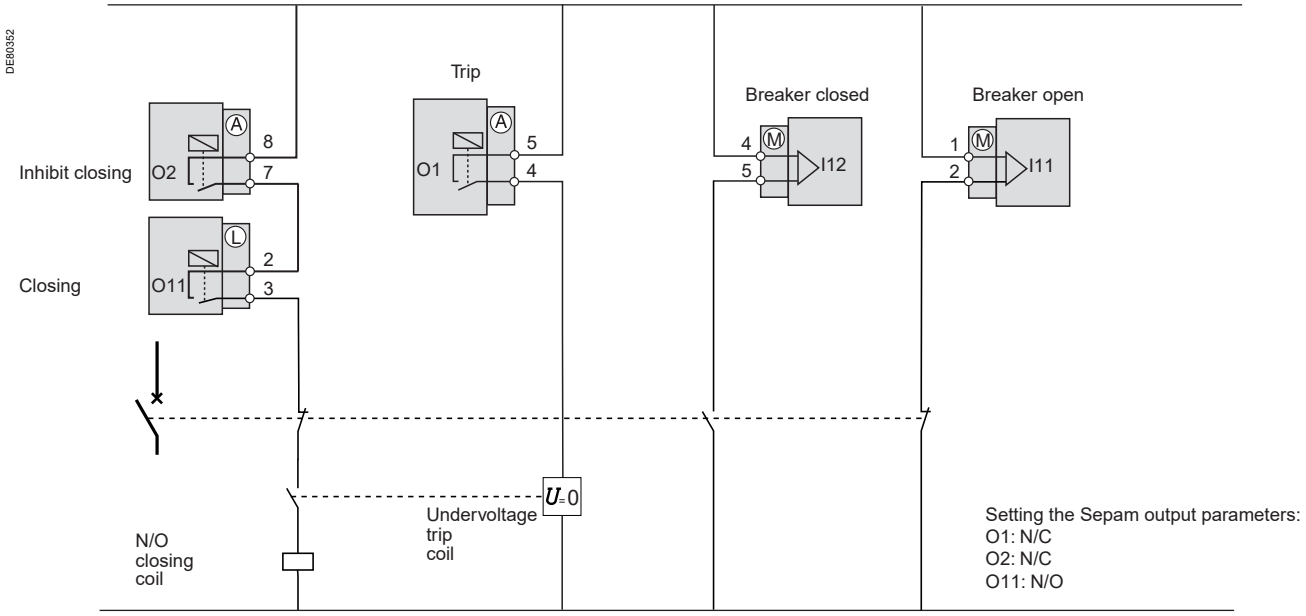

Example of use with undervoltage trip coil without fail-safe condition (diagram 3)

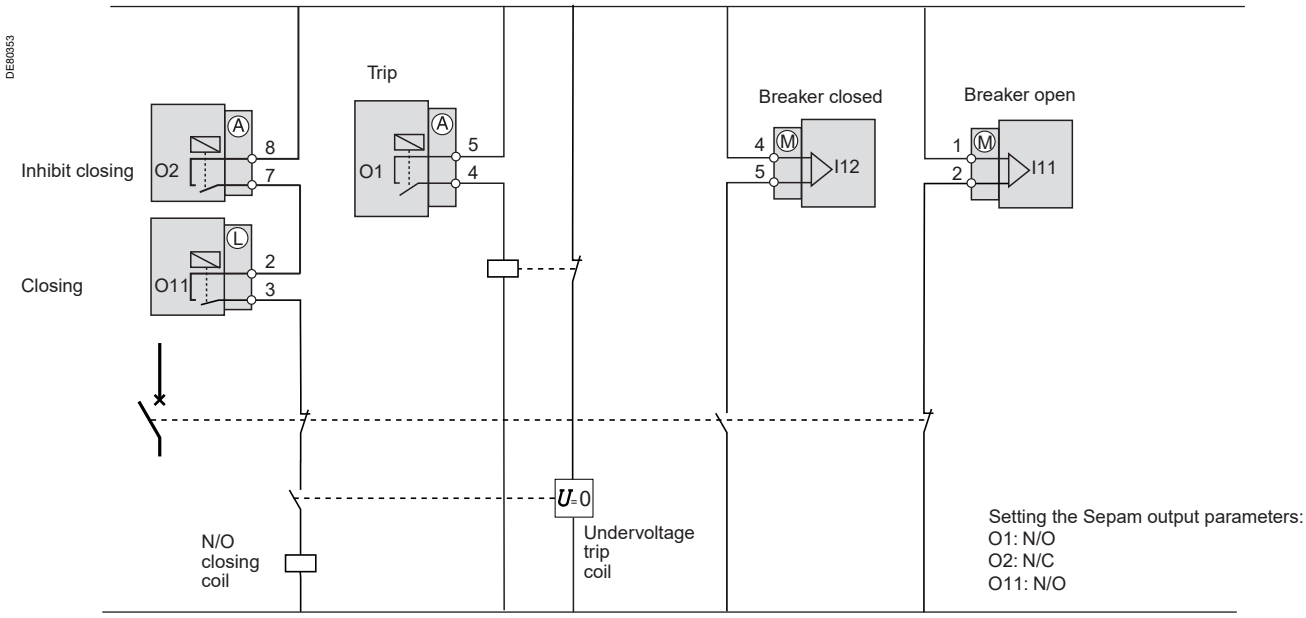

Using the watchdog

The watchdog is extremely important in the monitoring system, as it indicates to the user that the Sepam protection functions are working correctly. When Sepam detects an internal failure, a LED flashes automatically on the Sepam front panel regardless of whether the watchdog output is connected correctly. If the watchdog output is not correctly connected to the system, this LED is the only way of knowing that Sepam has failed. We therefore strongly recommend connecting the watchdog output at the highest level of the installation so that an effective alarm is generated when necessary. For example, an audible alarm or flashing alarm lamp can be used to warn the operator.

Watchdog output status	No failure detected	Failure detected
Watchdog output connected correctly to the control system	The protection functions are in working order	■ The protection functions are not working. ■ Sepam is in the fail-safe position. ■ The Sepam alarm LED flashes. ■ The watchdog output activates a system alarm. ■ The operator is warned that he needs to intervene.
Watchdog output not connected	The protection functions are in working order	■ The protection functions are not working. ■ Sepam is in the fail-safe position. ■ The Sepam alarm LED flashes. ■ The need of maintenance is detected only if an operator controls the front panel of the digital relay.

Presentation

Presentation	**102**
Modbus protocol	**103**
Configuring the communication interfaces	**104**
Commissioning and diagnosis	**106**
Data addresses and encoding	**108**
Time-tagging of events	**117**
Access to remote settings	**122**
Disturbance recording	**132**
Reading Sepam identification	**134**

Presentation

General

Modbus communication allows Sepam to be connected to a supervisor or any other device with a master Modbus communication channel.
Sepam is always a slave station.

Sepam is connected to a Modbus communication network via a communication interface.
There is a choice of two types of communication interface:
■ communication interfaces to connect Sepam to a single network:
□ ACE949-2, for connection to a 2-wire RS 485 network
□ ACE959, for connection to a 4-wire RS 485 network
□ ACE937, for connection to a fiber-optic star network.
■ communication interfaces to connect Sepam to two networks:
□ ACE969TP-2, for connection to:
- one 2-wire RS 485 Modbus S-LAN supervision communication network
- one 2-wire RS 485 E-LAN engineering communication network.
□ ACE969FO-2, for connection to:
- one fiber-optic Modbus S-LAN supervision communication network
- one 2-wire RS 485 E-LAN engineering communication network.

Data available

The data available depend on the type of Sepam.

Measurement readout
■ phase and earth fault currents
■ peak demand phase currents
■ tripping currents
■ cumulative breaking current
■ phase-to-phase, phase-to-neutral and residual voltages
■ frequency
■ temperatures
■ thermal capacity used
■ starts per hour and inhibit time
■ running hours counter
■ motor starting current and time
■ operating time before overload tripping
■ waiting time after tripping
■ operating time and number of operations
■ circuit breaker charging time.

Program logic data readout
■ a table of 64 pre-assigned remote indications (TS) (depends on the type of Sepam) enables the readout of program logic data status
■ readout of the status of 10 logic inputs.

Remote control orders
Writing of 16 impulse-type remote control orders (TC) in either direct mode or SBO (Select Before Operate) mode via 16 selection bits.

Other functions
■ reading of Sepam configuration and identification
■ time-tagging of events (synchronization via the network or externally via logic input I21), time-tagging within a millisecond
■ remote reading of Sepam settings
■ remote setting of protection units
■ remote control of the analog output (with MSA141 option)
■ transfer of disturbance recording data.

Characterization of exchanges

The Modbus protocol may be used to read or write one or more bits, one or more words, the contents of the event counters or the contents of the diagnosis counters.

Modbus functions supported

The Modbus protocol used by Sepam is a compatible sub-group of the RTU Modbus protocol.
The functions listed below are handled by Sepam:

- basic functions (data access):
  - function 1: reading of n output or internal bits
  - function 2: reading of n input bits
  - function 3: reading of n output or internal words
  - function 4: reading of n input words
  - function 5: writing of 1 bit
  - function 6: writing of 1 word
  - function 7: high-speed reading of 8 bits
  - function 8: reading of diagnosis counters
  - function 11: reading of Modbus event counters
  - function 15: writing of n bits
  - function 16: writing of n words.
- communication-management functions:
  - function 8: Modbus diagnosis
  - function 11: reading of Modbus event counter
  - function 43: sub-function 14: reading of identification.

The following exception codes are supported:

- 1: unknown function code
- 2: incorrect address
- 3: incorrect data
- 4: not ready (cannot process request)
- 7: not acknowledged (remote reading and setting).

Response time

The communication coupler **response time (Tr)** is less than 15 ms, including a 3-character silence (approximately 3 ms at 9600 bauds).
This time is given with the following parameters:

- 9600 bauds
- format: 8 bits, odd parity, 1 stop bit.

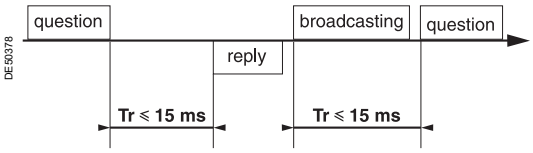

Synchronization of exchanges

Any character that is received after a silence of more than 3 characters is considered as the beginning of a frame. A silence of at least 3 characters must be left on the line between two frames.
Example: at 9600 bauds, this time is equal to approximately 3 milliseconds.

Protocol principle

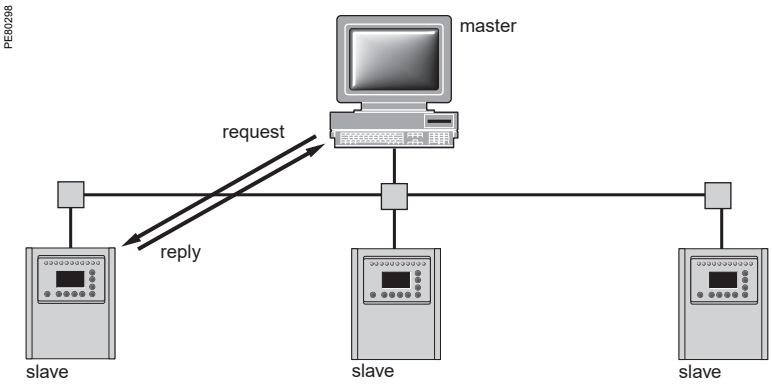

Exchanges are initiated by the master and include a request by the master and a reply by the slave (Sepam). Requests by the master are either addressed to a given Sepam identified by its number in the first byte of the request frame, or addressed to all the Sepam (broadcasting).

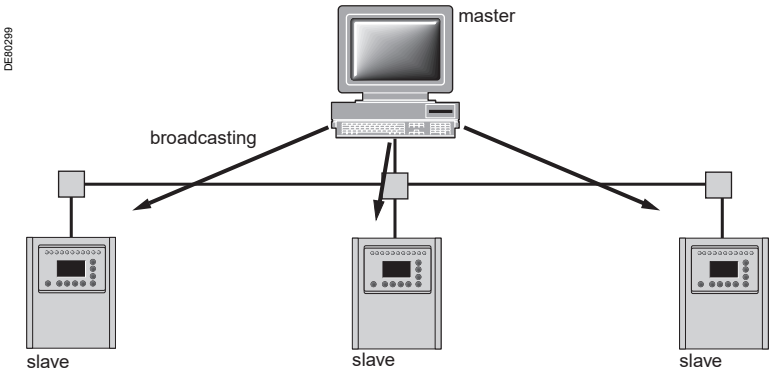

Broadcast commands are necessarily write commands.
No replies are transmitted by the Sepam.

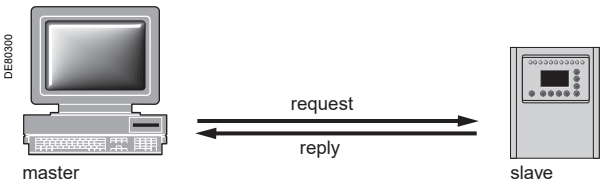

It is not necessary to have a detailed knowledge of the protocol unless the master is a central computer which requires the corresponding programming. All Modbus exchanges include 2 messages: a request by the master and a reply by the Sepam. All the frames that are exchanged have the same structure. Each message or frame contains 4 types of data:

slave number	function code	data zones	CRC 16 check zone

- slave number (1 byte): this indicates the receiving Sepam (0 to FFh).
If it is equal to zero, the request concerns all the slaves (broadcasting) and there is no reply message
- function code (1 byte): this is used to select a command (read, write, bit, word) and to check that the reply is correct
- data zones (n bytes): these zones contain the parameters relating to the function: bit, address, word address, bit value, word value, number of bits, number of words
- check zone (2 bytes): this zone is used to detect transmission errors.

Configuring the communication interfaces

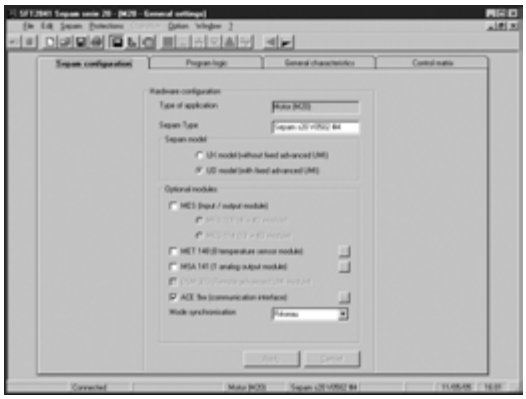

SFT2841: Sepam Configuration screen.

Access to configuration parameters

The Sepam communication interfaces are configured using SFT2841 software. The configuration parameters can be accessed from the Communication configuration window in SFT2841.
To access this window:
- open the **Sepam configuration** window in SFT2841
- check the box for ACE9xx (communication interface)
- click ...: the **Communication configuration** window appears
- select the type of interface used: ACE949/ACE959/ACE937, ACE969TP or ACE969FO
- select the Modbus communication protocol.

The configuration parameters will vary depending on the communication interface selected: ACE949/ACE959/ACE937, ACE969TP or ACE969FO. The table below specifies the parameters to be configured depending on the communication interface chosen.

Parameters to be configured	ACE949 ACE959 ACE937	ACE969TP	ACE969FO
Physical layer parameters	■	■	■
Fiber-optic parameters			■
Modbus advanced parameters	■	■	■
E-LAN parameters		■	■

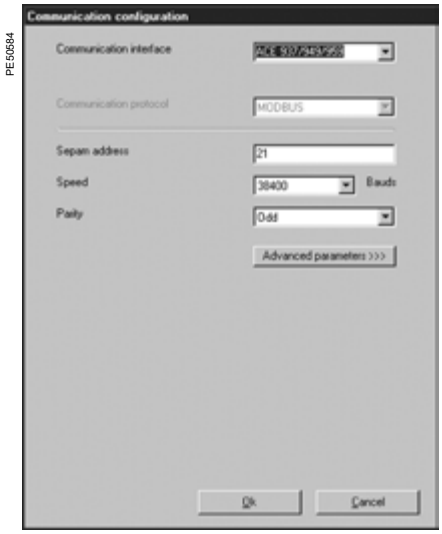

SFT2841: communication configuration window for ACE949.

Configuring the physical layer of the Modbus port

Asynchronous serial transmission is used with the following character format:
- 8 data bits
- 1 stop bit
- parity according to parameter setting.

The number of stop bits is always fixed at 1.
If a configuration with Parity has been selected, each character will contain 11 bits (1 start bit + 8 data bits + 1parity bit + 1 stop bit)
If a No Parity configuration has been selected, each character will contain 10 bits (1 start bit + 8 data bits + 1 stop bit).
The configuration parameters for the physical layer of the Modbus port are:
- slave number (Sepam address)
- transmission speed
- parity check type.

Parameters	Authorized values	Default value
Sepam address	1 to 247	1
Speed	4800, 9600, 19200 or 38400 bauds	19200 bauds
Parity	None, Even or Odd	Even

Configuring the ACE969FO-2 fiber-optic port

The configuration for the physical layer of the ACE969FO-2 fiber-optic port is completed with the following 2 parameters:
- link idle state: light-on or light-off
- echo mode: with or without.

Fiber-optic parameters	Authorized values	Default value
Link idle state	Light Off or Light On	Light Off
Echo mode	Yes (fiber-optic ring) or No (fiber-optic star)	No

Note: *in echo mode, the Modbus master will receive the echo of its own request before the slave's reply. The Modbus master must be able to disregard this echo. Otherwise, it is impossible to create a Modbus fiber-optic ring.*

Configuring the communication interfaces

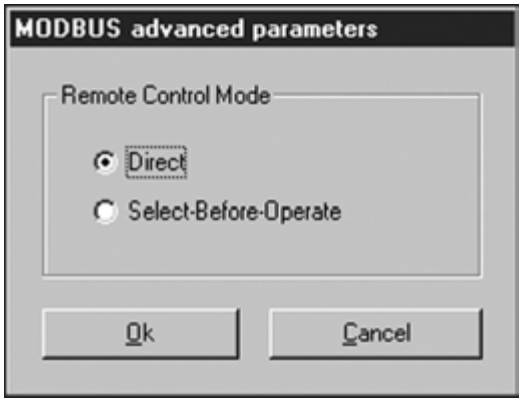

SFT2841: Modbus advanced parameters window.

Configuring Modbus advanced parameters

The Sepam remote control mode is selected from the Advanced parameters window.

Advanced parameters	Authorized values	Default value
Remote control mode	Direct or SBO (Select Before Operate) mode	Direct

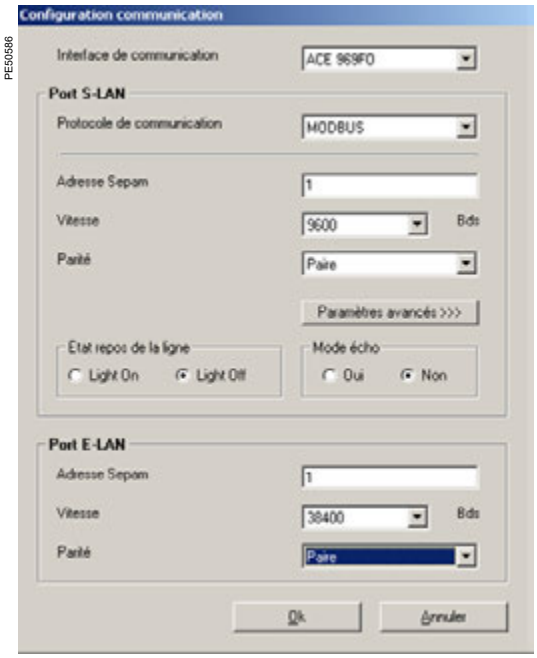

SFT2841: communication configuration window for ACE969FO.

Configuring the physical layer of the ACE969-2 E-LAN port

The E-LAN port on the ACE969TP-2 and ACE969FO-2 communication interfaces is a
2-wire RS 485 port.
The configuration parameters for the physical layer of the E-LAN port are:
- Sepam address
- transmission speed
- parity check type.

The number of stop bits is always fixed at 1.
If a configuration with Parity has been selected, each character will contain 11 bits (1 start bit + 8 data bits + 1parity bit + 1 stop bit)
If a No Parity configuration has been selected, each character will contain 10 bits (1 start bit + 8 data bits + 1 stop bit).

Parameters	Authorized values	Default value
Sepam address	1 to 247	1
Speed	4800, 9600, 19200 or 38400 bauds	38400 bauds
Parity	None, Even or Odd	Odd

Configuration tips

- The Sepam address MUST be assigned before Sepam is connected to the communication network.
- You are also strongly advised to set the other physical layer configuration parameters before making the connection to the communication network.
- Modifying the configuration parameters during normal operation will not disturb Sepam but will reset the communication port.

Installing the communication network

Preliminary study
The communication network must first be the subject of a technical study to determine the following, according to the installation characteristics and constraints (geography, amount of information processed, etc.):
- the type of medium (electrical or fiber optic)
- the number of Sepam units per network
- the transmission speed
- the ACE interfaces configuration
- the Sepam parameter settings.

Sepam user manual
The communication interfaces must be installed and connected in accordance with the instructions in the Installation chapter of this manual.

Preliminary checks

The following preliminary checks must be made:
- check the CCA612 cord connection between the ACE interface and the Sepam base unit
- check the ACE Modbus communication port connection
- check the complete configuration of the ACE
- for the ACE969, check the auxiliary power supply connection.

Checking the operation of the ACE interface

You can use the following to check that an ACE interface is operating correctly:
- the indicator LEDs on the front panel of the ACE
- the information provided by the SFT2841 software connected to Sepam:
  - on the Diagnosis screen
  - on the Communication configuration screens.

Link activity LED for ACE949-2, ACE959 and ACE937
The link activity LED for ACE949-2, ACE959 and ACE937 interfaces flashes when Sepam transmission or reception is active.

Indicator LEDs on the ACE969
- green "on" LED: ACE969 energized
- red "key" LED: ACE969 interface status
  - LED off: ACE969 configured and communication operational
  - LED flashing: ACE969 configuration error or ACE969 not configured
  - LED on: ACE969 error
- link activity LED: S-LAN Tx flashing, Sepam transmission active
- link activity LED: S-LAN Rx flashing, Sepam reception active.

SFT2841: Sepam series 20 diagnosis screen.

Diagnosis using SFT2841 software

Sepam diagnosis screen
When connected to Sepam, the SFT2841 software informs the operator of the general Sepam status and of the Sepam communication status in particular.
All Sepam status information appears on the Sepam diagnosis screen.

Sepam communication diagnosis
The operator is provided with the following information to assist with identifying and resolving communication problems:
- name of the protocol configured
- Modbus interface version number
- number of valid frames received (CPT9)
- number of invalid (mistaken) frames received (CPT2).

Link activity LED

The ACE interface link activity LEDs are activated by variations in the signal on the Modbus network. When the supervisor communicates with Sepam (during transmission or reception), these LEDs flash.
After wiring, check the information given by the link activity LEDs when the supervisor operates.

Note: *Flashing indicates that there is traffic passing to or from Sepam; it does not mean that the exchanges are valid.*

Functional test

If there is any doubt about correct operation of the link:
- run read/write cycles in the test zone
- use Modbus diagnosis function 8 (sub-code 0, echo mode).

The Modbus frames below, transmitted or received by a supervisor, are an example of a test performed when communication is set up.

Test zone	
Read	
Transmission	01 03 0C00 0002 C75B
Reception	01 03 04 0000 0000 FA33
Write	
Transmission	01 10 0C00 0001 02 1234 6727
Reception	01 10 0C00 0001 0299
Read	
Transmission	01 03 0C00 0001 875A
Reception	01 03 02 1234 B533
Function 8 - Modbus diagnosis, echo mode	
Transmission	01 08 0000 1234 ED7C
Reception	01 08 0000 1234 ED7C

Even in echo mode, Sepam recalculates and checks the CRC sent by the master:
- If the CRC received is valid, Sepam replies
- If the CRC received is invalid, Sepam does not reply.

Modbus diagnosis counters

Counter definition

Sepam manages the Modbus diagnosis counters. These are:
- **CPT1**: Number of valid frames received, whether the slave is involved or not
- **CPT2**: Number of frames received with a CRC error or physical error (frames with more than 255 bytes, frames received with at least one parity, overrun, framing or line-break error)

In the 2-wire RS 485 mode, the counter must not be taken into account (meaningless).
CPT3: Number of exception responses generated (even if not transmitted, due to receipt of a broadcast request)
- **CPT4**: Number of frames specifically addressed to the station (excluding broadcasting)
- **CPT5**: Number of valid broadcast frames received
- **CPT6**: Not significant
- **CPT7**: Not significant
- **CPT8**: Number of frames received with at least one character having a physical error (parity, overrun, framing or line break)
- **CPT9**: Number of valid requests received and correctly executed.

Counter reset

The counters are reset to 0:
- when they reach the maximum value FFFFh (65535)
- when they are reset by a Modbus command (function 8)
- when Sepam auxiliary power is lost
- when communication parameters are modified.

Using the counters

Modbus diagnosis counters help to detect and resolve communication problems. They can be accessed by the dedicated read functions (Modbus protocol functions 8 and 11).
CPT2 and CPT9 counters can be displayed on SFT2841
("Sepam Diagnosis" screen).
An incorrect speed (or parity) increments CPT2.
Non-reception is signaled by the lack of change on CPT9.

Operating anomalies

It is advisable to connect the Sepam units to the Modbus network one by one.
Make sure that the supervisor is sending frames to the relevant Sepam by checking the activity on the RS 232 - RS 485 converter or the fiber-optic converter if there is one, and on the ACE module.

RS 485 network
- check the wiring on each ACE module
- check the tightness of the screw terminals on each ACE module
- check the connection of the CCA612 cord linking the ACE module to the Sepam base unit
- check that polarization is only at one point and that impedance matching is at both ends of the RS 485 network
- check the auxiliary power supply connection to the ACE969TP-2
- check that the ACE909-2 or ACE919 converter used is connected, powered and set up correctly.

Fiber-optic network
- check the connections on the ACE module
- check the connection of the CCA612 cord linking the ACE module to the Sepam base unit
- check the auxiliary power supply connection to the ACE969FO-2
- check that the converter or fiber-optic star used is connected, powered and set up correctly
- for a fiber-optic ring, check that the Modbus master can handle the echo of its requests correctly.

In all cases
- check all the ACE configuration parameters on SFT2841
- check the CPT2 and CPT9 diagnostic counters on the SFT2841 ("Sepam Diagnosis" screen).

Data addresses and encoding

Presentation

Data which are similar from the monitoring and control application viewpoint are grouped together in adjacent address zones:

	Hexadecimal starting address	Ending address	Modbus functions enabled
Synchronization zone	0002	0005	3, 16
Identification zone	0006	000F	3
First event table			
Exchange word	0040	0040	3, 6, 16
Events (1 to 4)	0041	0060	3
Second event table			
Exchange word	0070	0070	3, 6, 16
Events (1 to 4)	0071	0090	3
Data			
States	0100	0105	3, 4 1, 2*
Measurements	0106	0131	3, 4
Remote control orders	01F0	01F0	3, 4, 6, 16 1, 2, 5, 15*
Remote control confirmation	01F1	01F1	3, 4, 6, 16 1, 2, 5, 15*
Test zone	0C00	0C0F	3, 4, 6, 16 1, 2, 5, 15
Protection settings			
Reading	2000	207C	3
Reading request	2080	2080	3, 6, 16
Remote settings	2100	217C	3, 6
Disturbance recording			
Choice of transfer function	2200	2203	3, 16
Identification zone	2204	2228	3
Fault rec. exchange word	2300	2300	3, 6, 16
Fault rec. data	2301	237C	3
Application			
Configuration	FC00	FC02	3
Application identification	FC10	FC22	3

N.B. Non-addressable zones may reply by an exception message or else supply non-significant data.
(*) these zones may be accessed in word mode or in bit mode.
The address of bit i ($0 \leqslant i \leqslant F$) of address word J is then (J x 16) + i.
e.g. 0C00 bit 0 = C000 0C00 bit 7 = C007.

Data encoding

For all formats

If a measurement overruns the maximum permissible value for the related format, the value read for the measurement will be the maximum permissible value for the format.

Format 16 NS

All information is encoded in a 16-bit word, in absolute value (unsigned), binary format. The zero bit (b0) is the least significant bit in the word.

Format 16 S signed measurements (temperatures, …)

The information is encoded in a 16-bit word as a complement of 2.
Example:
- 0001 represents +1
- FFFF represents -1.

Format B: Ix

Rank i bit in the word, with i between 0 and F.

Examples		F	E	D	C	B	A	9	8	7	6	5	4	3	2	1	0
Logic inputs	Word address 0105																
								26	25	24	23	22	21	14	13	12	11
	Bit address 105x																
TS1 to TS16	Word address 0101																
		16	15	14	13	12	11	10	9	8	7	6	5	4	3	2	1
	Bit address 101x																
TS49 to TS64	Word address 0104																
		64	63	62	61	60	59	58	57	56	55	54	53	52	51	50	49
	Bit address 104x																
TC1 to TC16	Word address 01F0																
		16	15	14	13	12	11	10	9	8	7	6	5	4	3	2	1
	Bit address 1F0x																
STC1 to STC16	Word address 01F1																
		16	15	14	13	12	11	10	9	8	7	6	5	4	3	2	1
	Bit address 1F1x																

Format X: Sepam check-word

This format applies only to the Sepam check-word that may be accessed at the word address 100h. This word contains various items of information relating to:
- Sepam operating mode
- time-tagging of events.

Each data item contained in the Sepam check-word may be accessed bit by bit, from address **1000** for the bit b0 to **100F** for the bit b15.
- bit 15 event present
- bit 14 Sepam in “data loss” status
- bit 13 Sepam not synchronous
- bit 12 Sepam time not correct
- bit 11 S-LAN communication monitoring active
- bit 10 Sepam in local setting mode
- bit 9 major fault in Sepam
- bit 8 partial fault in Sepam
- bit 7 setting group A in service
- bit 6 setting group B in service
- bit 4 remote indication of tripping by protection function
- bit 3-0 mapping number (1 to 16).

Other bits reserved (undetermined values).

Status changes of bits 6, 7, 8, 10, 12, 13 and 14 of this word trigger the transmission of a time-tagged event.
Bits 3 to 0 encode a “mapping number” (from 1 to 15) which is used to identify the contents of the Modbus addresses, the assignment of which varies depending on the application.

Synchronization zone

The synchronization zone is a table which contains the absolute date and time for the time-tagging function. Time messages should be written in a single block containing 4 words, using function 16: write word.
Messages can be read word by word or by groups of words using function 3.

Synchronization zone	Word address	Access	Modbus function enabled
Binary time (year)	0002	Read/write	3, 16
Binary time (months + days)	0003	Read	3
Binary time (hours + minutes)	0004	Read	3
Binary time (milliseconds)	0005	Read	3

See "time-tagging of events" chapter for data format.

Identification zone

The identification zone contains system-type information pertaining to the identification of the Sepam equipment.
Some of the information in the identification zone is also found in the configuration zone at the address FC00h.

Identification zone	Word address	Access	Modbus function enabled	Format	Value
Manufacturer identification	0006	R	3		0100
Equipment	0007	R	3		0
Marking + equipment type	0008	R	3		Idem FC01
Modbus version	0009	R	3		Idem FC02
Application version	000A/B	R	3	Not managed	0
Sepam check-word	000C	R	3		Idem 0100
Synthesis zone	000D	R	3	Not managed	0
Command	000E	R/W	3/16	Not managed	Init. to 0
Extension address	000F	R	3		FC00

This zone is provided to ensure compatibility with existing equipment. A more complete description is available starting at address FC00h in the configuration zone or using the identification read function.

First events zone

The events zone is a table which contains a maximum of 4 time-tagged events.
Events should be read in a single block containing 33 words using function 3.
The exchange word can be written using functions 6 or 16, and read individually using function 3.

Events zone 1	Word address	Access	Modbus function enabled
Exchange word	0040	Read/write	3, 6, 16
Event n°1	0041-0048	Read	3
Event n°2	0049-0050	Read	3
Event n°3	0051-0058	Read	3
Event n°4	0059-0060	Read	3

See "time-tagging of events" chapter for data format.

Second events zone

The events zone is a table which contains a maximum of 4 time-tagged events.
Events should be read in a single block containing 33 words using function 3.
The exchange word can be written using functions 6 or 16 and read individually using function 3.

Events zone 2	Word address	Access	Modbus function enabled
Exchange word	0070	Read/write	3, 6, 16
Event n°1	0071-0078	Read	3
Event n°2	0079-0080	Read	3
Event n°3	0081-0088	Read	3
Event n°4	0089-0090	Read	3

See "time-tagging of events" chapter for data format.

Status zone

The **status zone** is a table which contains the Sepam check-word, pre-assigned remote annunciation bits (TS), and logic inputs.

Status	Word address	Bit address	Access	Modbus function enabled	Format
Sepam check-word	100	1000	R	3/4 or 1, 2, 7	X
TS1-TS16	101	1010	R	3/4 or 1, 2	B
TS17-TS32	102	1020	R	3/4 or 1, 2	B
TS33-TS48	103	1030	R	3/4 or 1, 2	B
TS49-TS64	104	1040	R	3/4 or 1, 2	B
Logic inputs	105	1050	R	3/4 or 1, 2	B

Measurement zone (S20, S23, S24, T20, T23, T24 and M20 types)

Measurements	Word address	Access	Modbus function enabled	Format	Unit
I1 phase current (gain x 1)	106	R	3/4	16NS	0.1 A
I2 phase current (gain x 1)	107	R	3/4	16NS	0.1 A
I3 phase current (gain x 1)	108	R	3/4	16NS	0.1 A
I0 residual current (gain x 1)	109	R	3/4	16NS	0.1 A
Im1 average phase current (x 1)	10A	R	3/4	16NS	0.1 A
Im2 average phase current (x 1)	10B	R	3/4	16NS	0.1 A
Im3 average phase current (x 1)	10C	R	3/4	16NS	0.1 A
I1 phase current (gain x 10)	10D	R	3/4	16NS	1 A
I2 phase current (gain x 10)	10E	R	3/4	16NS	1 A
I3 phase current (gain x 10)	10F	R	3/4	16NS	1 A
I0 residual current (gain x 10)	110F	R	3/4	16NS	1 A
IM1 average phase current (x10)	111	R	3/4	16NS	1 A
IM2 average phase current (x10)	112	R	3/4	16NS	1 A
IM3 average phase current (x10)	113	R	3/4	16NS	1 A
IM1 peak demand phase current	114	R	3/4	16NS	1 A
IM2 peak demand phase current	115	R	3/4	16NS	1 A
IM3 peak demand phase current	116	R	3/4	16NS	1 A
Reserved	117	R	3/4	-	-
Itrip1 tripping current	118	R	3/4	16NS	10 A
Itrip2 tripping current	119	R	3/4	16NS	10 A
Itrip3 tripping current	11A	R	3/4	16NS	10 A
Itrip0 tripping current	11B	R	3/4	16NS	1 A
Cumulative breaking current	11C	R	3/4	16NS	1 $(kA)^2$
Number of operations	11D	R	3/4	16NS	1
Operating time	11E	R	3/4	16NS	1 ms
Charging time	11F	R	3/4	16NS	1 sec
Reserved	120	R	3/4	-	-
Running hours counter	121	R	3/4	16NS	1 hr
Thermal capacity used	122	R	3/4	16NS	%
Operating time before overload tripping	123	R	3/4	16NS	1 min
Waiting time after overload tripping	124	R	3/4	16NS	1 min
Unbalance ratio	125	R	3/4	16NS	% Ib
Starting time / overload	126	R	3/4	16NS	0.1 sec
Starting current overload	127	R	3/4	16NS	1 A
Start inhibit time delay	128	R	3/4	16NS	1 min
Number of starts allowed	129	R	3/4	16NS	1
Temperatures 1 to 8	12A/131	R	3/4	16S	1 °C
Reserved	132/1EF	Prohibited			

Note: *Only the measurements related to the Sepam function are significant. The values of the others are zero.*

Measurement zone (B20, B21, B22 types)

Measurements	Word address	Access	Modbus function enabled	Format	Unit
U21 phase to phase voltage (x1)	106	R	3/4	16NS	1 V
U32 phase to phase voltage (x1)	107	R	3/4	16NS	1 V
U13 phase to phase voltage (x1)	108	R	3/4	16NS	1 V
V1 phase to neutral voltage (x1)	109	R	3/4	16NS	1 V
V2 phase to neutral voltage (x1)	10A	R	3/4	16NS	1 V
V3 phase to neutral voltage (x1)	10B	R	3/4	16NS	1 V
V0 residual voltage (x1)	10C	R	3/4	16NS	1 V
Positive sequence voltage (x1)	10D	R	3/4	16NS	1 V
Frequency	10E	R	3/4	16NS	0.01 Hz
U21 phase to phase voltage (x10)	10F	R	3/4	16NS	1 V
U32 phase to phase voltage (x10)	110	R	3/4	16NS	1 V
U13 phase to phase voltage (x10)	111	R	3/4	16NS	1 V
V1 phase to neutral voltage (x10)	112	R	3/4	16NS	1 V
V2 phase to neutral voltage (x10)	113	R	3/4	16NS	1 V
V3 phase to neutral voltage (x10)	114	R	3/4	16NS	1 V
V0 residual voltage (x10)	115	R	3/4	16NS	1 V
Positive sequence voltage (x10)	116	R	3/4	16NS	1 V
Reserved	*117/131*	*R*	*3/4*		*init. to 0*
Reserved	*132/1EF*	*Prohibited*			

Accuracy
The accuracy of the measurements depends on the order of the unit: it is equal to the value of the point divided by 2.

Examples		
I1	Unit = 1 A	Accuracy = 1/2 = 0.5 A
U21	Unit = 10 V	Accuracy = 10/2 = 5 V

5

Remote control zone

The remote control zone is a table which contains the pre-assigned remote control bits (TC). The zone may be read or written using the word functions or bit functions. See section on remote control orders.

	Word address	Bit address	Access	Modbus function enabled	Format	Unit
Remote controls						
TC1-TC16	01F0	1F00	R/W	3/4/6/16 1/2/5/15	B	
STC1-STC16	01F1	1F10	R/W	3/4/6/16 1/2/5/15	B	
Control of analog output	01F2		R/W	3/4/6/16	16S	
Reserved	*01F3*		*Prohibited*			
S-LAN communication monitoring						
Time delay	01F4		R/W	3/6/16	16NS	0.1 sec
Reserved	*01F5/0BFF*		*Prohibited*			

Protection setting zone

The protection setting zone is an exchange table which is used to read and set protections.

Protection settings	Word address	Access	Modbus function enabled	
Setting read buffer	2000/207C	R	3	
Setting read request	2080	R/W	3/6/16	-
Remote setting request buffer	2100/217C	R/W	3/16	

See section on protection settings.

Fault recorder zone

The fault recorder zone is an exchange table which is used to read records.

Disturbance recording	Word address	Access	Modbus function enabled
Choice of transfer function	2200/2203	R/W	3/16
Identification zone	2204/2228	R	3
Fault rec. exchange word	2300	R/W	3/6/16
Fault rec. data	2301/237C	R	3

See section on fault recorder.

Test zone

The test zone is a 16-word zone that may be accessed via the communication link by all the functions, in both read and write modes, to facilitate communication testing at the time of commissioning or to test the link.

Test zone	Word address	Bit address	Access	Modbus function enabled	Format	
Test	0C00	C000-C00F	read/write	1, 2, 3, 4, 5, 6, 15, 16	none	init. to 0
	0C0F	C0F0-C0FF	read/write	1, 2, 3, 4, 5, 6, 15, 16	none	init. to 0

Configuration zone

The configuration zone contains information pertaining to the hardware and software configuration of the Sepam.

Configuration zone	Word address	Access	Modbus function enabled	Format	
Modbus address (slave no.)	FC00	R	3		
Sepam type (MSB) / hardware config. (LSB)	FC01	R	3	(1)	
Coupler type (MSB)/ version (LSB)	FC02	R	3	(2)	
application identification					
Type of application (S20, M20, etc.)	FC10/15	R	3	ASCII	12 characters
application version	FC16/18	R	3	ASCII	6 characters
application marking	FC19/22	R	3	ASCII	20 characters

(1) *FC01 word:MSB = 10h (Sepam)*
LSB = hardware configuration

(2) *FC02 word:MSB = 01h (Sepam)*
LSB = XY (communicationversion X,Y)

Bit	7	6	5	4	3	2	1	0
Option	**UD/UX**	**reserved**	**MES114E/ MES114F**	**DSM303**	**MSA141**	**MET148-2 (3)**	**MES114**	**MES108**
UX model	0	0	z	x	x	x	y	y
UX model	1	0	z	0	x	x	y	y

(3) *or MET148.*
x = 1 if option included
y = 1 if option included, exclusive options
z = 1 if Vac set up.

Use of remote annunciation

Sepam provides the communication link with 64 remote annunciation bits (TS).
The TS are pre-assigned to protection and control functions which depend on the Sepam model.
The TS can be read using the bit or word functions.
Each TS transition is time-tagged and stored in the event stack (see section Time-tagging of events).

Address word 0101: TS1 to TS16 (bit address 1010 to 101F)

TS	Use	S20	S24	T20	T24	M20	B21	B22
1	Protection 50/51 relay 1 group A	■	■	■	■	■		
2	Protection 50/51 relay 2 group A	■	■	■	■	■		
3	Protection 50/51 relay 1 group B	■	■	■	■	■		
4	Protection 50/51 relay 2 group B	■	■	■	■	■		
5	Protection 50N/51N relay 1 group A	■	■	■	■	■		
6	Protection 50N/51N relay 2 group A	■	■	■	■	■		
7	Protection 50N/51N relay 1 group B	■	■	■	■	■		
8	Protection 50N/51N relay 2 group B	■	■	■	■	■		
9	Protection 49 RMS alarm set point			■	■	■		
10	Protection 49 RMS tripping set point			■	■	■		
11	Protection 37					■		
12	Protection 46	■	■	■	■	■		
13	Protection 48/51LR/14 (locked rotor)					■		
14	Protection 48/51LR/14 (locked rotor on start)					■		
15	Protection 48/51LR/14 (excessive starting time)					■		
16	Protection 66					■		

Address word 0102: TS17 to TS32 (bit address 1020 to 102F)

TS	Use	S20	S24	T20	T24	M20	B21	B22
17	Protection 27D/47 relay 1						■	■
18	Protection 27D/47 relay 2						■	■
19	Protection 27 relay 1						■	■
20	Protection 27 relay 2						■	■
21	Protection 27R						■	■
22	Protection 59 relay 1						■	■
23	Protection 59 relay 2						■	■
24	Protection 59N relay 1						■	■
25	Protection 59N relay 2						■	■
26	Protection 81H						■	■
27	Protection 81L relay 1						■	■
28	Protection 81L relay 2						■	■
29	Protection 27S phase 1 (1)						■	■
30	Protection 27S phase 2 (1)						■	■
31	Protection 27S phase 3 (1)						■	■
32	Protection 81R							■

(1) *Not available on the B20 application.*

Note: *Applications S24 and T24 perform the functions of applications S23 and T23 respectively and, in addition, the phase overcurrent and earth fault cold load pick-up functions.*

Address word 0103: TS33 to TS48 (bit address 1030 to 103F)

TS	Use	S20	S24	T20	T24	M20	B21	B22
33	Protection 50BF		■		■			
34	Recloser in service	■	■					
35	Recloser in progress	■	■					
36	Recloser permanent trip	■	■					
37	Recloser successful trip	■	■					
38	Send blocking input	■	■	■	■	■		
39	Remote setting inhibited	■	■	■	■	■	■	■
40	Remote control inhibited	■	■	■	■	■	■	■
41	Sepam not reset after fault	■	■	■	■	■	■	■
42	Remote control/position discrepancy	■	■	■	■	■	■	■
43	Matching fault or Trip Circuit Supervision	■	■	■	■	■	■	■
44	Disturbance recording memorized	■	■	■	■	■	■	■
45	Control fault	■	■	■	■	■	■	■
46	Disturbance recording inhibited	■	■	■	■	■	■	■
47	Thermal protection inhibited			■	■	■		
48	RTD fault			■	■	■		

Address word 0104: TS49 to TS64 (bit address 1040 to 104F)

TS	Use	S20	S24	T20	T24	M20	B21	B22
49	Protection 38/49T alarm set point sensor 1			■	■	■		
50	Protection 38/49T tripping set point sensor 1			■	■	■		
51	Protection 38/49T alarm set point sensor 2			■	■	■		
52	Protection 38/49T tripping set point sensor 2			■	■	■		
53	Protection 38/49T alarm set point sensor 3			■	■	■		
54	Protection 38/49T tripping set point sensor 3			■	■	■		
55	Protection 38/49T alarm set point sensor 4			■	■	■		
56	Protection 38/49T tripping set point sensor 4			■	■	■		
57	Protection 38/49T alarm set point sensor 5			■	■	■		
58	Protection 38/49T tripping set point sensor 5			■	■	■		
59	Protection 38/49T alarm set point sensor 6			■	■	■		
60	Protection 38/49T tripping set point sensor 6			■	■	■		
61	Protection 38/49T alarm set point sensor 7			■	■	■		
62	Protection 38/49T tripping set point sensor 7			■	■	■		
63	Protection 38/49T alarm set point sensor 8			■	■	■		
64	Protection 38/49T tripping set point sensor 8			■	■	■		

Address check-word 0100: bit 4 (bit address 1004)

	Use	S20	S24	T20	T24	M20	B21	B22
Bit 4	Tripping by protection function	■	■	■	■	■	■	■

Note: *Applications S24 and T24 perform the functions of applications S23 and T23 respectively and, in addition, the phase overcurrent and earth fault cold load pick-up functions.*

Use of remote control orders

Remote control orders are pre-assigned to protection, control and metering functions.
Remote control orders may be carried out in two modes:
■ direct mode
■ confirmed SBO (select before operate) mode.

All the remote control orders can be inhibited by logic input I25 on the MES114 module.
According to the parameter setting of logic input I25, the tripping remote control order TC1 can be activated at any time or can be inhibited.
Logic input I25 can be set up according to 2 modes:
■ Inhibited if the input is set to 1 ("POS" prefix)
■ Inhibited if the input is set to 0 ("NEG" prefix)

The device tripping and closing and recloser enable and disable remote control orders are acknowledged if the “CB control“ function is validated and if the inputs necessary for the logic are present on the MES114 (or MES108) optional module.

Direct remote control order
The remote control order is executed when it is written in the remote control word. The program logic resets it to zero after the remote control order is acknowledged.

Confirmed SBO remote control order (Select Before Operate)
In this mode, remote control orders involve two steps:
■ selection by the master of the order to be sent by writing of the bit in the STC word and checking of the selection by rereading the word
■ execution of the order to be sent by writing of the bit in the TC word.
The remote control order is executed if the bit in the STC word and the bit in the associated word are set; the program logic resets the bit STC and TC bits to zero after the remote control order is acknowledged.
Deselection of the STC bit takes place:
■ if the master deselects it by writing in the STC word
■ if the master selects (write bit) a bit other than the one already selected
■ if the master sets a bit in the TC word which does not match the selection. In this case, no remote control order is executed.

Address word 01F0: TC1 to TC16 (bit address 1F00 to 1F0F)

TC	Use	S20	S24	T20	T24	M20	B21	B22
1	Tripping	■	■	■	■	■	■	■
2	Closing	■	■	■	■	■	■	■
3	Switching to setting group A (3)	■	■	■	■	■		
4	Switching to setting group B (3)	■	■	■	■	■		
5	Sepam reset	■	■	■	■	■	■	■
6	Peak demand current zero reset (3)	■	■	■	■	■		
7	Inhibit thermal protection (3)			■	■	■		
8	Inhibit disturbance recording triggering (OPG (1))	■	■	■	■	■	■	■
9	Confirm disturbance recording triggering (OPG (1))	■	■	■	■	■	■	■
10	Manual disturbance recording triggering (OPG (1))	■	■	■	■	■	■	■
11	Enable recloser (3)	■	■					
12	Disable recloser (3)	■	■					
13	Confirm thermal protection (3)			■	■	■		
14	Reserved							
15	Activate S-LAN communication monitoring (2)(3)	■	■	■	■	■	■	■
16	Inhibit S-LAN communication monitoring (3)	■	■	■	■	■	■	■

(1) OPG : French acronym for disturbance recording.
(2) TC15 Remote control order follows the same TC1 inhibition mode.
(3) The maximum number of remote controls is limited to 1,000,000 over the life of the product.

***Note:** Applications S24 and T24 perform the functions of applications S23 and T23 respectively and, in addition, the phase overcurrent and earth fault cold load pick-up functions.*

Analog output remote control

The analog output of the MSA141 module may be set up for remote control via the Modbus communication module (word address 01F2). The working range of the numerical value transmitted is defined by the parameter setting of the "min. value" and "max. value" of the analog output.
This function is not affected by remote control inhibition conditions.

Time-tagging of events

Presentation

The communication system time-tags the data prcessed by Sepam. The time-tagging function assigns a date and precise time to status changes so that they can be accurately classified with over time. Time-tagged data are events that can be processed in the control room by the remote monitoring and control system using the communication protocol for data logging and chronological reports.
Sepam time-tags the following data:
- logic inputs
- remote annunciation bits
- information pertaining to Sepam equipment (see Sepam check-word).

Time-tagging is carried out systematically.
Chronological sorting of the time-tagged events is performed by the remote monitoring and control system.

Time-tagging
Sepam time-tagging uses absolute time (see section on date and time). When an event is detected, it is tagged with the absolute time given by Sepam's internal clock.
All the Sepam internal clocks must be synchronized so as to avoid drifts and all be the same to allow inter-Sepam chronological sorting. Sepam has two mechanisms for managing its internal clock:
- **time-setting:**

for initializing or modifying the absolute time. A special Modbus message, called "time message", is used to time-set each Sepam
- **synchronization:**

to avoid Sepam internal clock drifts and ensure inter-Sepam synchronization.
Internal clocks can be synchronized according to two principles:
- **internal synchronization:**

via the communication network without any additional cabling,
- **external synchronization:**

via a logic input with additional cabling.
At the time of commissioning, the user sets the synchronization mode parameter.

Initialization of the time-tagging function
Each time the communication system is initialized (energizing of Sepam), the events are generated in the following order:
- appearance of "data loss"
- appearance of "incorrect time"
- appearance of "not synchronous"
- disappearance of "data loss".

The function is initialized with the current values of the remote annunciation and logic input status without creating any events related to these data. After the initialization phase, event detection is activated.
It can only be interrupted by saturation of the internal event storage queue or by the presence of a major fault in Sepam.

Date and time

Presentation
An absolute date and time are managed internally by Sepam, consisting of the information Year: Month: Day: Hour: minute: millisecond.
The date and time format is standardized (ref: IEC 60870-5-4).

Backup
The Sepam internal clock is backed up for 24 hours. After a power outage lasting longer than 24 hours, the time will need to be reset.
The duration of the Sepam date and time backup if the power supply fails depends on the ambient temperature and age of the Sepam.
Typical backup periods:

■ at 25°	■ at 40°
□ 24 hrs for 7 years	□ 24 hrs for 3 years
□ 18 hrs after 10 years	□ 16 hrs after 10 years
□ 14 hrs after 15 years	□ 10 hrs after 15 years

Setting the time
Sepam's internal clock can be set in one of 3 ways:
- by the supervisor, via the Modbus link
- by the SFT2841, "General characteristics" screen
- from the display unit of Sepam units equipped with the advanced UMI

The time associated with an event is encoded on 8 bytes as follows:

0	0	0	0	M	M	M	M	0	0	0	D	D	D	D	D	word 2
0	0	0	H	H	H	H	H	0	0	mn	mn	mn	mn	mn	mn	word 3
ms	ms	ms	ms	ms	ms	ms	ms	ms	ms	ms	ms	ms	ms	ms	ms	word 4

Y - 1 byte for years: varies from 0 to 99 years.
The remote monitoring and control system must ensure that the year 00 is greater than 99.
M - 1 byte for months: varies from 1 to 12.
D - 1 byte for days: varies from 1 to 31.
H - 1 byte for hours: varies from 0 to 23.
mn - 1 byte for minutes: varies from 0 to 59.
ms - 2 bytes for milliseconds: varies from 0 to 59999.
This information is encoded in binary form. Sepam is time-set via the "write word" function (function 16) at the address 0002 with a mandatory 4-word time message.
The bits set to "0" in the description above correspond to format fields which are not used and not generated by Sepam.
Since these bits can be transmitted to Sepam with random values, Sepam performs the necessary disabling.
Sepam does not check the consistency or validity of the date and time received.

Synchronization clock

A synchronization clock is required for setting the date and time of Sepam.
Schneider Electric has tested the following equipment:
Gorgy Timing, ref. RT 300, equipped with the M540 module.

Time-tagging of events

Reading of events

Sepam provides the master or masters with two event tables. The master reads the event table and acknowledges by writing the exchange word.
Sepam updates its event table.

The events sent by Sepam are not sorted chronologically.

Structure of the first event table:
- exchange word 0040h
- event number 1
0041h ... 0048h
- event number 2
0049h ... 0050h
- event number 3
0051h ... 0058h
- event number 4
0059h ... 0060h

Structure of the second event table:
- exchange word 0070h
- event number 1
0071h ... 0078h
- event number 2
0079h ... 0080h
- event number 3
0081h ... 0088h
- event number 4
0089h ... 0090h

The master necessarily reads a block of 33 words starting at the address 0040h/0070h, or one word at the address 0040h/0070h.

Exchange word
The exchange word is used to manage a special protocol to be sure not to lose events following a communication problem. The event table is numbered for this purpose.
The exchange word includes two fields:
- most significant byte = exchange number (8 bits): 0..255.

b15	b14	b13	b12	b11	b10	b09	b08

Exchange number: 0 .. 255

Description of the MS byte of the exchange word.

The exchange number contains a numbering byte which identifies the exchanges.
The exchange number is initialized to zero when Sepam is energized.
When it reaches its maximum value (FFh), it automatically returns to 0.
Sepam numbers the exchanges and the master acknowledges the numbering.

- least significant byte = number of events (8 bits): 0..4

b07	b06	b05	b04	b03	b02	b01	b00

Number of events: 0 .. 4

Description of LS byte of the exchange word.

Sepam indicates the number of significant events in the event table in the least significant byte of the exchange word. Each non-significant event word is initialized to zero.

Event table acknowledgment
To inform Sepam that the block read by the master has been correctly received, the master writes the number of the last exchange made in the “Exchange number” field, and resets the "Number of events" field of the exchange word to zero. After acknowledgment, the 4 events in the event table are initialized to zero and the old, acknowledged events are erased in Sepam.
Until the exchange word written by the master becomes “X,0” (with X = number of the previous exchange that the master wishes to acknowledge), the exchange word in the table remains at “X, number of previous events”.
Sepam only increments the exchange number when new events are present (X+1, number of new events).
If the event table is empty, Sepam performs no processing operations when the master reads the event table or the exchange word.
The data are encoded in binary form.

Clearing an event queue
Writing a value "xxFFh" in the exchange word (any exchange number, event number = FFh) reinitializes the corresponding event queue (all stored events not yet transmitted are deleted).

Sepam in data loss (1) / no data loss (0) status
Sepam has an internal storage queue with a capacity of 64 events. If the queue becomes saturated, a "data loss" event is inserted by Sepam when each event table is read.
The detection of events stops and the most recent events are lost.
Data loss is managed independently for each of the two event tables. When the tables are read at different rates, data loss may occur at different times for each table or even, in some cases, appear only on the slowest channel.

Note: *the "data loss" bit of the Sepam check word corresponds to the status of the first reading table (compatibility with earlier versions).*

Description of event encoding

An event is encoded in 8 words with the following structure:

Most significant byte	Least significant byte	
Word 1: type of event		
08	00	For remote annunciation, internal data, logic inputs
Word 2: event address		
		Refer to bit addresses 1000 to 105F
Word 3: reserved		
00	00	
Word 4: falling edge: disappearance or rising edge: appearance		
00	00	Falling edge
00	01	Rising edge
Word 5: year		
00	0 to 99 (year)	
Word 6: month-day		
1 to 12 (month)	1 to 31 (day)	
Word 7: hours-minutes		
0 to 23 (hours)	0 to 59 (minutes)	
Word 8: milliseconds		
0 to 59999		

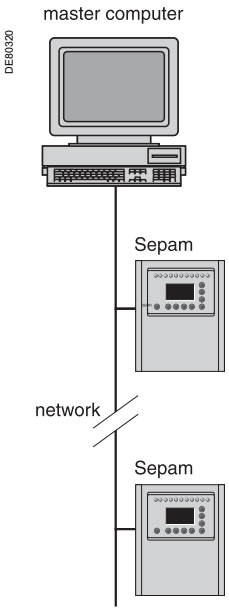

Architecture for "internal synchronization" via the communication network.

Synchronization

Sepam accommodates two synchronization modes:

- "internal via the network" synchronization mode by the broadcasting of a "time message" frame via the communication network. Slave number 0 is used for broadcasting
- "external" synchronization mode via a logic input.

The synchronization mode is selected at the time of commissioning via SFT2841.

Internal synchronization via the network mode

The “time message" frame is used for both time-setting and synchronization of Sepam. In this case, it must be sent regularly at brief intervals (between 10 and 60 seconds) in order for synchronous time to be obtained.
Sepam’s internal clock is reset each time a new time frame is received, and synchronization is maintained if the difference in synchronism is less than 100 milliseconds.
With internal synchronization via the network, accuracy is linked to the master and its mastery of time frame transmission in the communication network.
Sepam is synchronized without delay at the end of the receipt of the frame.
Time changes are made by sending a frame to Sepam with the new date and time.
Sepam then switches into a transitional non-synchronous status.
When Sepam is in synchronous status, if no "**time message**” is received for 200 seconds, the appearance of the “not synchronous” event is triggered.

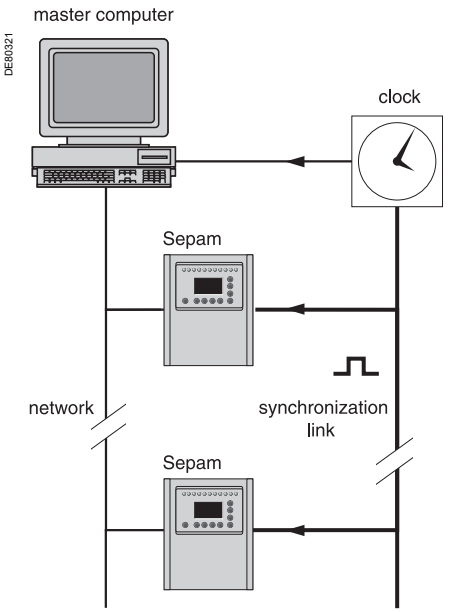

Architecture for "external synchronization" via a logic input.

Synchronization (cont'd)

External synchronization via a logic input mode

Sepam can be synchronized externally by means of a logic input (I21) (the MES114 module is required).
The synchronisation pulse is determined by the rising edge of the logic input.
Sepam can adapt to all synchronization pulse periods from 10 to 60 s, by 10 s steps.
The shorter the synchronization period, the more accurate time-tagging of status changes is.
The first time frame is used to initialize Sepam with the absolute date and time (the following frames are used for the detection of any time changes).
The synchronization pulse is used to reset Sepam's internal clock. In the initialization phase, when Sepam is in "non-synchronous" mode, resetting is allowed, within an amplitude of ±4 seconds.
In the initialization phase, the resetting process (switching of Sepam into "synchronous" mode) is based on a measurement of the difference between Sepam's current time and the nearest ten second period. This measurement is taken at the time of the receipt of the synchronization pulse following the initialization time frame. Resetting is allowed if the difference is less than or equal to 4 seconds, in which case Sepam switches to "synchronous" mode.
As of that time (after the switching to "synchronous" mode), the resetting process is based on the measurement of a difference (between Sepam's current time and the nearest ten second period at the time of the receipt of a synchronization pulse), which is adapted to match the synchronization pulse period.

The synchronization pulse period is determined automatically by Sepam when it is energized, based on the first two pulses received: the synchronization pulse must therefore be operational before Sepam is energized.

The synchronization function only operates after Sepam has been time-set, i.e. after the disappearance of the "incorrect time" event.

Any time changes greater than ±4 seconds in amplitude are made by sending a new time frame. The switch from summer time to winter time (and vice versa) is made in this way as well.
There is a temporary loss of synchronism when the time is changed.
The external synchronization mode requires additional equipment, a "synchronization clock " to generate a precise periodic synchronization time pulse.
If Sepam is in "correct time and synchronous" status, and if the difference in synchronism between the nearest ten second period and the receipt of the synchronization pulse is greater than the synchronism error for 2 consecutive synchronization pulses, it switches into non-synchronous status and generates the appearance of a "not synchronous" event.
Likewise, if Sepam is in "correct time and synchronous" status, the failure to receive a synchronization pulse for 200 seconds generates the appearance of a "not synchronous" event.

Reading of remote settings (remote reading)

Settings accessible for remote reading
Reading of the settings of all the protection functions may be accessed remotely.

Exchange principle
Remote reading of settings takes place in two steps:
■ first of all, the master indicates the code of the function for which it wishes to know the settings by means of a "request frame". The request is acknowledged, in the Modbus sense of the term, to free the network
■ the master then reads a reply zone to find the required information by means of a "reply frame".
Each function has its own particular reply zone contents. The time needed between the request and the reply is linked to Sepam's low priority cycle time and may vary by several tens to several hundreds of milliseconds.

Request frame
The request is made by the master using a "write word" (function 6 or 16) operation at the address 2080h of a 1-word frame consisting of the following:

2080h

B15	B14	B13	B12	B11	B10	B09	B08	B07	B06	B05	B04	B03	B02	B01	B00
Function code								Relay number							

The content of the address 2080h may be read using a Modbus "read word" (function 3).
The function code field may have the following values:
■ 01h to 99h (BCD encoding) for protection functions.
The relay number field is used as follows:
■ for protection, it indicates the relay involved, varying from 1 to N, N being the maximum number of relays available in the Sepam
■ when only one relay is available, this number field is not controlled.

Exception replies
In addition to the usual cases, Sepam can send Modbus type 07 exception replies (not acknowledged) if another remote reading request is being processed.

Reply frame
The reply, sent back by the Sepam, fits into a zone containing a maximum of 125 words at the address 2000h which is composed the following:

2000h/207Ch

B15	B14	B13	B12	B11	B10	B09	B08	B07	B06	B05	B04	B03	B02	B01	B00
Function code								Relay number							
Settings															
.....															
(special field for each function)															
.....															

This zone is read by a "read word" operation (function 3) at the address 2000h.
The length of the exchange may include:
■ the first word only (validity test)
■ the maximum size of the zone (125 mots)
■ the usable size of the zone (determined by the function being addressed).
However, reading must always begin at the first word in the zone (any other address triggers an exception reply "incorrect address").
The first word in the zone (function code and relay number) may have the following values:
■ **xxyy**: with
□ function code xx different from 00 and FFh
□ relay number yy different from FFh.
The settings are available and validated. They word is a copy of the "request frame".
The zone contents remain valid until the next request is made.
The other word are not significant.
■ **FFFFh**: the "request frame" has been processed, but the results in the "reply frame" are not yet available. It is necessary to repeat "reply frame" reading.
The other words are not significant.
■ **xxFFh**: with function code xx different from 00 and FFh. The function for which the remote reading request has been made is not valid. The function is not included in the particular Sepam, or remote reading of it is not authorized: refer to the list of functions which accommodate re PCRED301005EN

NOTICE

RISK OF UNINTENDED OPERATION

■ The device must only be configured and set by qualified personnel, using the results of the installation protection system study.

■ During commissioning of the installation and following any modification, check that the Sepam configuration and protection function settings are consistent with the results of this study.

Failure to follow these instructions can result in equipment damage.

Remote setting

Data that can be remotely set

Writing of the settings of all the protection functions may be accessed remotely.

Exchange principle

Remote setting is allowed for Sepam units.
Remote setting is carried out for a given function, relay by relay.
It takes place in two steps:

■ first of all, the master indicates the function code and relay number, followed by the values of all the settings in the a "write request frame". The request is acknowledged to free the network

■ the master then reads a reply zone to find the required information by means of a "reply frame", a reply zone designed for checking that the settings have been processed. Each function has its own particular reply zone contents. The contents are same as those of the reply frame.

To use remote setting, it is necessary to make all the settings for the function concerned, even if some of them have not changed.

Request frame

The request is made by the master using a "write n words" (function 16) operation at the address 2100h. The zone to be written contains a maximum of 123 words.
It contains the values of all the settings. It consists of the following:

2100h

B15	B14	B13	B12	B11	B10	B09	B08	B07	B06	B05	B04	B03	B02	B01	B00
Function code								Relay number							
Settings															
.....															
(special field for each function)															
.....															

The content of the address 2100h may be read using a "read n words" (function 3).
The function code field may have the following values:

■ 01h to 99h (BCD encoding) for the list of protection functions F01 to F99.

The relay number field is used as follows:

■ for protection, it indicates the relay involved, varying from 1 to N, N being the maximum number of relays available in the Sepam. It may never be equal to 0.

Exception reply

In addition to the usual cases, Sepam can send type 07 exception replies (not acknowledged) if:

■ another remote reading or setting request is being processed

■ the remote setting function is inhibited.

Reply frame

The reply sent back by the Sepam is the same as the remote reading reply frame. It fits into a zone containing a maximum of 125 words at the address 2000h and is composed of the effective settings of the function following a semantic check:

2000h-207Ch

B15	B14	B13	B12	B11	B10	B09	B08	B07	B06	B05	B04	B03	B02	B01	B00
Function code								Relay number							
Settings															
.....															
(special field for each function)															
.....															

This zone is read by a "read n words" operation (function 3) at the address 2000h. The length of the exchange may unclude:

- the first word only (validity test)
- the maximum size of the reply zone (125 words)
- the usable size of the reply zone (determined by the function being addressed).

However, reading must always begin at the first word in the address zone (any other address triggers an exception reply "incorrect address").

The first word in the reply zone (function code and relay number) has the same values as those described for the remote reading reply frame.

- **xxyy**: with:
  - function code xx different from 00 and FFh
  - relay number yy different from FFh.

The settings are available and validated. The word is a copy of the "request frame". The zone contents remain valid until the next request is made.

- **0000h**: no "request frame" has been formulated yet, as it is the case, in particular, when the Sepam is switched on.

The other words are not significant.

- **FFFFh**: the "request frame" has been processed, but the results in the "reply frame" are not yet available. It is necessary to repeat "reply frame" reading. The other words are not significant.
- **xxFFh**: with function code xx different from 00 and FFh. The function for which the remote reading request has been made is not valid. The function is not included in that particular Sepam, or access to settings is impossible, both in read and write mode.

Description of settings

Data format

All the settings are transmitted in signed 32-bit whole number form (encoding, as a complement of 2).

Particular setting value:

7FFF FFFFh means that the setting is outside the validity range.

① The Enabled or Disabled setting is encoded as follows:
0 = Disabled, 1 = Enabled

② The tripping curve setting is encoded as follows:

0 = definite

1 = standard inverse time	9 = IEC VIT/
2 = long time inverse	10 = IEC EIT/C
3 = very inverse time	11 = IEEE Mod. inverse
4 = extremely inverse time	12 = IEEE Very inverse
5 = ultra inverse time	13 = IEEE Extr. inverse
6 = RI	14 = IAC inverse
7 = IEC SIT/A	15 = IAC very inverse
8 = IEC LTI/B	16 = IAC extr. inverse

③ The setting of the timer hold curve is encoded as follows:
0 = definite time
1 = IDMT

④ The H2 restraint variable is encoded as follows:
0 = H2 restraint
1 = no H2 restraint

⑤ The tripping curve setting is:
0 = definite time
1 = IDMT

⑥ The negative sequence factor is:
0 = None (0)
1 = Low (2.25)
2 = Average (4.5)
3 = High (9)

⑦ Acknowledgment of the ambient temperature is encoded as follows:

0 = No
1 = Yes

⑧ Not used

⑨ The inhibition input setting is encoded as follows:

0 = No inhibition
1 = Inhibit recloser by logic input I26

⑩ Not used

⑪ The activation mode of each of the cycles is encoded as follows:

Correspondence between bit position and protection according to the table below:

Bit	Activation by
0	Inst O/C 1
1	Time-delayed O/C 1
2	Inst O/C 2
3	Time-delayed O/C 2
4	Inst E/F 1
5	Time-delayed E/F 1
6	Inst E/F 2
7	Time-delayed E/F 2

The bit status is encoded as follows:
0 = No activation by the protection
1 = Activation by the protection.

⑫ The time delay unit for the CLPU functions is encoded as follows:
0 = millisecond
1 = second
2 = minute

General characteristics settings (read only)

Function number: 3002

Setting	Data	Format/Unit
1	Rated frequency	0 = 50 Hz 1 = 60 Hz
2	Remote setting enabled	1 = disabled
3	Sepam working language	0 = English 1 = Customized language
4	Number of period before disturbance recording	1
5	Active setting groupe	0 = Setting group A 1 = Setting group B 2 = setting group A and B 3 = Choice by input I13 4 = Choice by remote control 5 = Logic discrimination
6	Setting mode	0 = TMS 1 = 10I/Is
7	Type of phase current sensor	0 = 5 A CT 1 = 1 A CT 2 = LPTC
8	Number of CTs	0 = 3 TC (I1, I2, I3) 1 = 2 TC (I1, I3)
9	Rated current	A
10	Base current	A
11	Residual current mode	0 = 3I sum 1 = 2 A rated CSH 2 = 20 A rated CSH 3 = 1 A CT 4 = 5 A CT 5 = ACE990 Range 1 6 = ACE990 Range 2
12	Rated residual current Ino	A
13	Integration period	0 = 5 mn 1 = 10 mn 2 = 15 mn 3 = 30 mn 4 = 60 mn
14	*Reserved*	
15	Rated primary voltage Unp	V
16	Rated secondary voltage Uns	0 = 100 V 1 = 110 V 2 = 115 V 3 = 120 V 4 = 200 V 5 = 230 V 6 = Numerical value, see setting 19
17	Voltages mesured by VTs	0 = 3 V (V1, V2, V3) 1 = 2 U (U21, U32) 2 = 1 U (U21)
18	Residual voltage mode	0 = none 1 = 3 V sum 2 = external VT —Uns/$\sqrt{3}$ 3 = external VT —Uns/3
19	Secondary rated voltage Uns	V

Protection settings

They are organized according to increasing ANSI codes.

ANSI 27 - Phase-to-phase undervoltage
Function number: 10xx
Relay 1: xx = 01
Relay 2: xx = 02

Setting	Data	Format/Unit
1	Enabled or disabled	1
2	Us set point	% Unp
3	Tripping time delay	10 ms
4 to 8	*Reserved*	

ANSI 27D/47 - Positive sequence undervoltage
Function number: 08xx
Relay 1: xx = 01
Relay 2: xx = 02

Setting	Data	Format/Unit
1	Enabled or disabled	1
2	Vsd set point	% Unp
3	Tripping time delay	10 ms
4 to 8	*Reserved*	

ANSI 27R - Remanent undervoltage
Function number: 0901

Setting	Data	Format/Unit
1	Enabled or disabled	1
2	Us set point	% Unp
3	Tripping time delay	10 ms
4 to 8	*Reserved*	

ANSI 27S - Phase-to-neutral undervoltage
Function number: 1801

Setting	Data	Format/Unit
1	Enabled or disabled	1
2	Vs set point	% Vnp
3	Tripping time delay	10 ms
4 to 8	*Reserved*	

ANSI 37 - Phase undercurrent
Function number: 0501

Setting	Data	Format/Unit
1	Enabled or disabled	1
2	Is set point	% Ib
3	Tripping time delay	10 ms

ANSI 38/49T - Temperature monitoring
Function number: 15xx
Relay 1: xx = 01
Relay 2: xx = 02
Relay 3: xx = 03
Relay 4: xx = 04
Relay 5: xx = 05
Relay 6: xx = 06
Relay 7: xx = 07
Relay 8: xx = 08

Setting	Data	Format/Unit
1	Enabled or disabled	1
2	Alarm set point	°C
3	Trip set point	°C
4 to 8	*Reserved*	

ANSI 46 - Negative sequence / unbalance
Function number: 0301

Setting	Data	Format/Unit
1	Enable or disabled	1
2	Tripping curve	5
3	Is set point	% Ib
4	Tripping time delay	10 ms

ANSI 48/51LR/14 - Locked rotor, excessive starting time
Function number: 0601

Setting	Data	Format/Unit
1	Enabled or disabled	1
2	Is set point	% Ib
3	Excessive starting time delayB (ST)	10 ms
4	Locked rotor time delay (LT)	10 ms
5	Locked rotor on start time delay (LTS)	10 ms

ANSI 49RMS - Thermal overload
Function number: 0401

Setting	Data	Format/Unit
1	Enable or disabled	1
2	Negative sequence factor	6
3	Is set point for switching from group A/group B	% Ib
4	Accounting for ambient temperature	7
5	Maximum equipment temperature	° C
6	*Reserved*	
7	*Reserved*	
8	Group A - heatrise alarm set point	%
9	Group A - Heat rise tripping set point	%
10	Group A - heating time constant	minutes
11	Group A - cooling time constant	minutes
12	Group A - initial heatrise value	%
13	Group B - enabled or disabled	1
14	Group B - heatrise alarm set point	%
15	Group B - heatrise tripping set point	%
16	Group B - heating time constant	minutes
17	Group B - cooling time constant	minutes
18	Group B - initial heatrise value	%

ANSI 50/51 - Phase current
Function number: 01xx
Relay 1: xx = 01
Relay 2: xx = 02

Setting	Data	Format/Unit
1	*Reserved*	
2	Group A - tripping curve	2
3	Group A - Is set point	0.1 A
4	Group A - tripping time delay	10 ms
5	Group A - timer hold curve	3
6	Group A - timer hold delay	10 ms
7	Group B - H2 restraint	4
8	Group B - Isc min	0,1 A
9	ON/OFF	1
10	Group B - tripping curve	2
11	Group B - Is set point	0.1 A
12	Group B - tripping time delay	10 ms
13	Group B - timer hold curve	3
14	Group B - timer hold delay	10 ms
15	Group B - H2 restraint	4
16	Group B - Isc min	0.1 A

ANSI 50BF - Breaker failure
Function number: 2101

Setting	Data	Format/Unit
1	ON or OFF	①
2	Is set point	0.1 A
3	Tripping time delay	10 ms
4	Use close position of circuit breaker	0 = No 1 = Yes

ANSI 50N/51N or 50G/51G - Earth fault
Function number: 02xx
Relay 1: xx = 01
Relay 2: xx = 02

Setting	Data	Format/Unit
1	*Reserved*	
2	Group A - tripping curve	②
3	Group A - Is0 set point	0.1 A
4	Group A - tripping time delay	10 ms
5	Group A - timer hold curve	③
6	Group A - timer hold delay	10 ms
7	Group A - H2 restraint	④
8	*Reserved*	
9	ON/OFF	①
10	Group B - tripping curve	②
11	Group B - Is0 set point	0.1 A
12	Group B - tripping time delay	10 ms
13	Group B - timer hold curve	③
14	Group B - timer hold delay	10 ms
15	Group B - H2 restraint	④
16	*Reserved*	

ANSI 59 - Phase-to-phase overvoltage
Function number: 11xx
Relay 1: xx = 01
Relay 2: xx = 02

Setting	Data	Format/Unit
1	Enabled or disabled	①
2	Us set point	% Unp
3	Tripping time delay	10 ms
4 to 8	*Reserved*	

ANSI 59N - Neutral voltage displacement
Function number: 12xx
Relay 1: xx = 01
Relay 2: xx = 02

Setting	Data	Format/Unit
1	Enabled or disabled	①
2	Vs0 set point	% Unp
3	Tripping time delay	10 ms
4 to 8	*Reserved*	

ANSI 66 - Starts per hour
Function number: 0701

Setting	Data	Format/Unit
1	Enabled or disabled	①
2	Period of time	hours
3	Total number of starts	1
4	Number of consecutive hot starts	1
5	Number of consecutive starts	1
6	Time delay between starts	minutes

ANSI 79 - Recloser function
Function number: 1701

Setting	Data	Format/Unit
1	Recloser —enabled or disabled	1
2	Recloser inhibition by input I26	9
3	Number of cycles	1 to 4
4	Recloser —disengaging time delay	10 ms
5	Recloser —inhibition time delay	10 ms
6	*Reserved*	
7	Cycle 1 —activation mode	11
8	Cycle 1 —isolation time delay	10 ms
9	*Reserved*	
10	Cycle 2 —activation mode	11
11	Cycle 2 —isolation time delay	10 ms
12	*Reserved*	
13	Cycle 3 —activation mode	11
14	Cycle 3 —isolation time delay	10 ms
15	*Reserved*	
16	Cycle 4 —activation mode	11
17	Cycle 4 —isolation time delay	10 ms

ANSI 81H - Overfrequency
Function number: 1301

Setting	Data	Format/Unit
1	Enabled or disabled	1
2	Fs set point	0.1 Hz
3	Tripping time delay	10 ms
4 to 8	*Reserved*	

ANSI 81L - Underfrequency
Function number: 14xx
Relay 1: xx = 01
Relay 2: xx = 02

Setting	Data	Format/Unit
1	Enabled or disabled	1
2	Fs set point	0.1 Hz
3	Tripping time delay	10 ms
4 to 8	*Reserved*	

ANSI 81R - Rate of change of frequency
Function number: 1601

Setting	Data	Format/Unit
1	Enabled or disabled	1
2	dFs/dt set point	0.1 Hz/s
3	Tripping time delay	10 ms
4 to 8	*Reserved*	

CLPU 50/51 and CLPU 50N/51N function parameter settings

Function number: 3006

Setting	Data	Format/Unit
1	Time before activation (Tcold)	10 ms
2	Pick-up threshold CPUs	% In
3	Global action CLPU 50/51 setting	0 = blocking 1 = multiplication
4	Global action CLPU 50N/51N setting	0 = blocking 1 = multiplication
5	Unit 1/Group A 50/51: pick-up time delay T	(1)
6	Unit 1/Group A 50/51: pick-up time delay T unit	12
7	Unit 1/Group A 50/51: multiplying factor M	% Is
8	Unit 1/Group A 50/51: ON or OFF	1
9	Unit 1/Group B 50/51: pick-up time delay T	(1)
10	Unit 1/Group B 50/51: pick-up time delay T unit	12
11	Unit 1/Group B 50/51: multiplying factor M	% Is
12	Unit 1/Group B 50/51: ON or OFF	1
13	Unit 2/Group A 50/51: pick-up time delay T	(1)
14	Unit 2/Group A 50/51: pick-up time delay T unit	12
15	Unit 2/Group A 50/51: multiplying factor M	% Is
16	Unit 2/Group A 50/51: ON or OFF	1
17	Unit 2/Group B 50/51: pick-up time delay T	(1)
18	Unit 2/Group B 50/51: pick-up time delay T unit	12
19	Unit 2/Group B 50/51: multiplying factor M	% Is
20	Unit 2/Group B 50/51: ON or OFF	1
21	Unit 1/Group A 50N/51N: pick-up time delay T0	(1)
22	Unit 1/Group A 50N/51N: pick-up time delay T0 unit	12
23	Unit 1/Group A 50N/51N: multiplying factor M0	% Is0
24	Unit 1/Group A 50N/51N: ON or OFF	1
25	Unit 1/Group B 50N/51N: pick-up time delay T0	(1)
26	Unit 1/Group B 50N/51N: pick-up time delay T0 unit	12
27	Unit 1/Group B 50N/51N: multiplying factor M0	% Is0
28	Unit 2/Group B 50N/51N: ON or OFF	1
29	Unit 2/Group A 50N/51N: pick-up time delay T0	(1)
30	Unit 2/Group A 50N/51N: pick-up time delay T0 unit	12
31	Unit 2/Group A 50N/51N: multiplying factor M0	% Is0
32	Unit 2/Group A 50N/51N: ON or OFF	1
33	Unit 2/Group B 50N/51N: pick-up time delay T0	(1)
34	Unit 2/Group B 50N/51N: pick-up time delay T0 unit	12
35	Unit 2/Group B 50N/51N: multiplying factor M0	% Is0
36	Unit 2/Group B 50N/51N: ON or OFF	1

(1) *numerical value, see time delay T (or T0) unit setting.*

Disturbance recording

Presentation

The disturbance recording function is used to record analog and logical signals during a time interval.
Sepam can store two records.
Each record comprises two files:
- configuration file with suffix .CFG
- data file with suffix .DAT.

The data of each record may be transferred via the Modbus link. It is possible to transfer 1 or 2 records to a remote monitoring and control system. The record may be transferred as many times as possible, until it is overwritten by a new record.
If a record is made by Sepam while the oldest record is being transferred, the oldest record is altered.
If a command (e.g. a remote reading or remote setting request) is carried out during the transfer of a disturbance recording record, the record is not disturbed.

Time-setting
Each record can be dated.
Time-setting of Sepam is described in the "Time-tagging of events" section.

Transferring records

The transfer requests are made record by record, i.e. one configuration file and one data file per record.
The master sends the commands in order to:
- find out the characteristics of the records stored in an identification zone
- read the contents of the different files
- acknowledge each transfer
- reread the identification zone to ensure that the record still appears in the list of records available.

Reading the identification zone
Given the volume of data to be transmitted, the master must ensure that there are data to be recovered and prepare the exchanges when necessary.
The identification zone, described below, is read by the reading of N words starting at the address 2204h:
- 2 reserve words forced to 0
- size of record configuration files encoded in 1 word
- size of record data files encoded in 1 words
- number of records encoded in 1 word
- date of record (most recent) encoded in 4 words (see format below)
- date of record (least recent) encoded in 4 words (see format below)
- 24 reserve words.

All of these data are consecutive.

Reading the contents of the different files

Request frame
The master makes the request by writing the date of the record to be transferred (function 16) in 4 words starting at the address 2200h.
It should be noted that requesting a new record amounts to stopping the transfers which are in progress. This is not the case for an identification zone transfer request.

2200h

B15	B14	B13	B12	B11	B10	B09	B08	B07	B06	B05	B04	B03	B02	B01	B00
O	O	O	O	O	O	O	O	Y	Y	Y	Y	Y	Y	Y	Y
O	O	O	O	M	M	M	M	O	O	O	D	D	D	D	D
O	O	O	H	H	H	H	H	O	O	mn	mn	mn	mn	mn	mn
ms	ms	ms	ms	ms	ms	ms	ms	ms	ms	ms	ms	ms	ms	ms	ms

Y - 1 byte for years: varies from 0 to 99 years.
The master must ensure that the year 00 is later than 99.
M - 1 byte for months: varies from 1 to 12.
D - 1 byte for days: varies from 1 to 31.
H - 1 byte for hours: varies from 0 to 23.
mn - 1 byte for minutes: varies from 0 to 59.
ms - 2 bytes for milliseconds: varies from 0 to 59999.

Reply frame
Reading of each portion of configuration and data file records by a reading frame (function 3) of 125-words starting at the address 2300h.

2300h

B15	B14	B13	B12	B11	B10	B09	B08	B07	B06	B05	B04	B03	B02	B01	B00
Exchange number								Number of usable bytes in the data zone							
.....															
Data zone															
.....															

Reading should always begin with the first word in the address zone (any other address triggers an exception reply "incorrect address").
The configuration and data files are read in their entirety in Sepam. They are transferred adjacently.

If the master requests more exchanges than necessary, the exchange number remains unchanged and the number of usable bytes is forced to 0. To guarantee the data transfers, it is necessary to allow a response time of about 500 ms between each reading operation at 2300h.
The first word transmitted is an exchange word. The exchange word comprises two fields:
■ the most significant byte contains the exchange number. It is incremented by 1 by the Sepam each time a successful transfer takes place. When it reaches the value FFh, it automatically goes back to zero
■ the least significant byte contains the number of usable bytes in the data zone. It is initialized to zero after energizing and must be different from FFh.
The exchange word may also have the following values:
■ **xxyy**: the number of usable bytes in the data zone yy must be different from FFh
■ **0000h**: no "read requeste frame" has been formulated yet, as it is the case in particular, when the Sepam is switched on. The other words are not significant,
■ **FFFFh**: the "request frame" has been processed, but the results in the reply zone are not yet available.
It is necessary to repeat "reply frame" reading.
The other words are not significant.
The words which follow the exchange word make up the data zone.
Since the configuration and data files are adjacent, a frame may contain the end of the configuration file and the beginning of the data file of a record.
It is up to the remote monitoring and control system software to reconstruct the files in accordance with the transmitted number of usable bytes and the size of the files indicated in the identification zone.

Acknowledging a transfer
To inform the Sepam that a record block that it has just read has been received correctly, the master must write the number of the last exchange that it has carried out in the "exchange number" filed and set the "number of usable bytes in the data zone" of the exchange word to zero.
The Sepam only increments the exchange number if new acquisition bursts are present.

Rereading the identification zone
To ensure that the record has not been modified, during its transfer by a new record, the master rereads the contents of the identification zone and ensures that the recovered record date is still present.

Reading Sepam identification

Presentation

The "Read Device Identification" function is used to access in a standardized manner the information required to clearly identify a device.
The description is made up of a set of objects (ASCII character strings).
Sepam series 20 accepts the "read identification" function (conformity level 02).
For a complete description of the function, go to **www.modbus.org**. The description below covers a subset of the function, adapted to Sepam series 20.

Implementation

Request frame

The request frame is made of the following components.

Field	*Size (bytes)*	
Slave number	1	
43 (2Bh)	1	*Generic access function code*
14 (0Eh)	1	*Read device identification*
01 or 02	1	*Type of read*
00	1	*Object number*
CRC16	2	

The type of read is used to select a simplified (01) or a standard (02) description.

Reply frame

The reply frame is made of the following components.:

Field	*Size (bytes)*	
Slave number	1	
43 (2Bh)	1	*Generic access function code*
14 (0Eh)	1	*Read device identification*
01 or 02	1	*Type of read*
02	1	*Conformity level*
00	1	*Continuation-frame flag (none for Sepam)*
00	1	*Reserved*
n	1	*Number of objects (according to read type)*
0bj1	1	*Number of first object*
lg1	1	*Length first object*
txt1	lg1	*ASCII string of first object*
.....	...	
objn	1	*Number n^{th} object*
lgn	1	*Length n^{th} object*
txtn	lgn	*ASCII string of nth object*
CRC16	2	

Exception frame

If an error occurs during request processing, a special exception frame is sent.

Field	*Size (bytes)*	
Slave number	1	
171 (ABh)	1	*Generic access exception (2Bh + 80h)*
14 (0Eh)	1	*Read device identification*
01 or 03	1	*Type of error*
CRC16	2	

Sepam series 20 identification

The objects making up the Sepam series 20 identification are listed below.

Number	Type	Value
0	VendorName	"Merlin Gerin" or "Schneider Electric"
1	ProductCode	Application EAN13 code
2	MajorMinorRevision	Application version number (Vxxyy)
3	VendorURL	"www.schneider-electric.com"
4	ProductName	"Sepam series 20"
5	ModelName	Application name (e.g. "M20 Motor")
6	UserAppName	Sepam marking

Contents

Safety and Cyber-security instructions **136**
Before starting
Precautions **137**
Equipment identification **138**
Base unit **141**
Dimensions 141
Assembly 142
Description 143
Connection 144
Connection of current inputs 145
Other phase current input connection schemes 146
Other residual current input connection schemes 147
Raccordement des entrées courant différentiel résiduel en basse tension 149
Connections of input voltage 151
Other voltage input connection schemes 152
Raccordement des entrées phase en basse tension 153
1 A/5 A current transformers **154**
Voltage transformers **156**
LPCT type current sensors **157**
CSH120, CSH200 and CSH300 Core balance CTs **160**
CSH30 interposing ring CT **162**
ACE990 Core balance CT interface **164**
MES114 modules **166**
Optional remote modules **169**
Connection
MET148-2 Temperature sensor module **170**
DSM303 Remote advanced UMI module **174**
Communication accessory selection guide **176**
Connection of communication interfaces **177**
Connection cords
ACE949-2 2-wire RS 485 network interface **178**
ACE959 4-wire RS 485 network interface **179**
ACE937 fiber optic interface **180**
ACE969TP-2 and ACE969FO-2 Multi-protocol interfaces **181**
Description 183
Connection 184
ACE909-2 RS 232/RS 485 converter **186**
ACE919CA and ACE919CC RS 485/RS 485 converters **188**
ECI850 IEC 61850 Sepam server **190**

Safety and Cyber-security instructions
Before starting

This page contains important safety and cyber-security instructions that must be followed precisely before attempting to install, repair, service or maintain electrical equipment. Carefully read and follow the safety and cyber-security instructions described below.

Safety instructions

DANGER

HAZARD OF ELECTRIC SHOCK, ELECTRIC ARC, BURNS OR EXPLOSION

- Only qualified personnel should install this equipment. Such work should be performed only after reading this entire set of instructions.
- NEVER work alone.
- Turn off all power supplying this equipment before working on or inside it.
- Always use a properly rated voltage sensing device to confirm that all power is off.
- Before performing visual inspections, tests, or maintenance on this equipment, disconnect all sources of electric power. Assume that all circuits are live until they have been completely de-energized, tested and tagged. Pay particular attention to the design of the power system. Consider all sources of power, including the possibility of backfeeding.
- Beware of potential hazards, wear personal protective equipment, carefully inspect the work area for tools and objects that may have been left inside the equipment.
- The successful operation of this equipment depends upon proper handling, installation, and operation. Neglecting fundamental installation requirements can lead to personal injury as well as damage to electrical equipment or other property.
- Handling this product requires relevant expertise in the field of protection of electrical networks. Only competent people who have this expertise are allowed to configure and set up this product.
- Before performing Dielectric (Hi-Pot) or Megger testing on any equipment in which the relay is installed, disconnect all input and output wires to the relay. High voltage testing can damage electronic components contained in the Sepam unit.

Failure to follow these instructions will result in death or serious injury.

Cyber security instructions

SEPAM is designed to be operated only on a protected network.
(see document "Recommended Cybersecurity Best Practices"
--> https://www.se.com/us/en/download/document/7EN52-0390/)

NOTICE

HAZARD OF DATA TAMPERING OR UNINTENDED OPERATION

- Secure the local network : physically or logically segment the network and restrict access using standard controls such as firewall.
- Enable IP Filtering for Modbus/TCP and IEC61850 (see document "SEPAM IEC61850 communication" SEPED306024 chapter configuration of ACE850 communication interface).
- Inhibit the remote-setting. It is possible to inhibit the remote-setting function using a configuration parameter accessible via SFT2841. In the default set-up (factory settings), the remote-setting function is inhibited.

FAILURE TO FOLLOW THESE INSTRUCTIONS CAN RESULT IN COMPROMISED SECURITY. SCHNEIDER-ELECTRIC MAKES NO WARRANTY THAT THE SEPAM PRODUCTS WILL BE FREE FROM VULNERABILITIES, CORRUPTION, ATTACK, VIRUSES, INTERFERENCE, HACKING OR OTHER SECURITY INTRUSIONS OR CYBER THREATS, AND SCHNEIDER-ELECTRIC DISCLAIMS ANY LIABILITY IN RELATION THERETO.

Precautions

We recommend that you follow the instructions given in this document for quick, correct installation of your Sepam unit:
- *Equipment identification*
- *Assembly*
- *Connection of inputs, current, voltage and sensors*
- *Connection of power supply*
- *Checking prior to commissioning*

Transport, handling and storage

Sepam in its original packaging

Transport:
Sepam can be shipped to any destination by all usual means of transport without taking any additional precautions.

Handling:
Sepam can be handled without any particular care and can even withstand being dropped by a person standing at floor-level.

Storage:
Sepam can be stored in its original packaging, in an appropriate location for several years:
- Temperature between -25°C and +70°C (between -13°F and +158°F)
- Humidity ⩽ 90%.

Periodic, yearly checking of the environment and the packaging condition is recommended.
Energize the Sepam for 1 hour:
- every 5 years for a storage temperature < 30 ° C (86 ° F)
- every 3 years for a storage temperature ⩾ 30 ° C (86 ° F)
- every 2 years for a storage temperature ⩾ 50 ° C (122 ° F)

Once Sepam has been unpacked, it should be energized as soon as possible.
If the storage time has been longer than 2 years, it is advisable to activate each of the output relays 5 times during commissioning (see procedure in chapter “Commissioning - Checking the connection of the logic outputs”, page 298)

Sepam installed in a cubicle

Transport:
Sepam can be transported by all usual means of transport in the customary conditions used for cubicles. Storage conditions should be taken into consideration for a long period of transport.

Handling:
Should the Sepam fall out of a cubicle, check its condition by visual inspection and energizing.

Storage:
Keep the cubicle protection packing for as long as possible. Sepam, like all electronic units, should not be stored in a damp environment for more than a month. Sepam should be energized as quickly as possible. If this is not possible, the cubicle reheating system should be activated.

Environment of the installed Sepam

Operation in a damp environment
The temperature/relative humidity factors must be compatible with the unit’s environmental withstand characteristics.
If the use conditions are outside the normal zone, special arrangements should be made before commissioning, such as air conditioning of the premises.

Operation in a polluted atmosphere
A contaminated industrial atmosphere (such as the presence of chlorine, hydrofluoric acid, sulfur, solvents, etc.) can cause corrosion of the electronic components, in which case environmental control arrangements should be made (such as pressurized premises with filtered air, etc.) before commissioning.
The effect of corrosion on Sepam has been tested according to the IEC 60068-2-60 and EIA 364-65A (See "Environmental Characteristic", page 18).

Equipment identification

Identification of the base unit

Each Sepam comes in a single package which contains the base unit and the base unit 20-pin connector (CCA620 or CCA622).
The other optional accessories such as modules, current or voltage input connectors and cords come in separate packages.
To identify a Sepam, check the 2 labels on the right side panel of the base unit describing the product's functional and hardware features.

■ Hardware reference and designation label

■ Functional reference and designation label

Equipment identification

Identification of accessories

The accessories such as optional modules, current or voltage connectors and connection cords come in separate packages, which are identified by labels.

■ Example of MES114 module identification label:

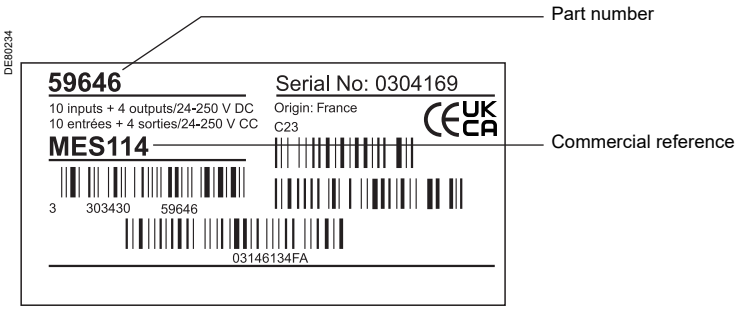

Equipment identification

List of Sepam series 20 references

Reference	Description
59603	Base unit with basic UMI, 24-250 V DC and 100-240 V AC power supply (1)
59607	Base unit with advanced UMI, 24-250 V DC and 100-240 V AC power supply (1)
59608	DSM303, remote advanced UMI module
59609	Working language English/French
59611	Working language English/Spanish
59620	Substation application type S20
59621	Transformer application type T20
59622	Motor application type M20
59624	Busbar application type B21
59625	Busbar application type B22
59778	Substation application type S24
59779	Transformer application type T24
59629	CCA634 connector for 1 A/5 A CT + I0 current sensors
59630	CCA630 connector for 1 A/5 A CT current sensors
59631	CCA670 connector for LPCT current sensors
59632	CCA640 connector for VT voltage sensors
59634	CSH30 interposing ring CT for I0 input
59635	CSH120 residual current sensor, diameter 120 mm (4.7 in)
59636	CSH200 residual current sensor, diameter 196 mm (7.72 in)
59637	CSH300 residual current sensor, diameter 291 mm (11.46 in)
59638	ECI850: IEC 61850 Sepam server with PRI surge arrester
59639	AMT852 lead sealing accessory
59641	MET148-2 8-temperature sensor module
59642	ACE949-2 2-wire RS 485 network interface
59643	ACE959 4-wire RS 485 network interface
59644	ACE937 optical fiber interface
59646	MES114 10 input + 4 output module/24-250 V DC (1)
59647	MSA141 1 analog output module
59648	ACE909-2 RS 485/RS 232 converter
59649	ACE919CA RS 485/RS 485 interface (AC power supply)
59650	ACE919CC RS 485/RS 485 interface (DC power supply)
59651	MES114E 10 input + 4 output module/110-125 V DC and V AC
59652	MES114F 10 input + 4 output module/220-250 V DC and V AC
59660	CCA770 remote module connection cord, L = 0.6 m (2 ft)
59661	CCA772 remote module connection cord, L = 2 m (6.6 ft)
59662	CCA774 remote module connection cord, L = 4 m (13 ft)
59663	CCA612 communication interface connection cord, L = 3 m (9.8 ft)
59664	CCA783 PC RS 232 connection cord
59666	CCA613 LPCT test plug
59667	ACE917 LPCT injection adapter
59668	CCA620 20-pin screw type connector
59669	CCA622 20-pin ring lug connector
59670	AMT840 mounting plate
59671	CCA784 PC USB connection cord
59672	ACE990 core balance CT interface for I0 input
59676	Kit 2640 2 sets of spare connectors
59679	SFT2841 CD-ROM with SFT2841 and SFT2826 software, without CCA783 or CCA784 cords
59723	ACE969TP-2 2-wire RS 485 multi-protocol interface (Modbus, DNP3 or IEC 60870-5-103)(1)
59724	ACE969FO-2 fiber-optic multi-protocol interface (Modbus, DNP3 or IEC 60870-5-103)(1)
59726	SFT850 CD-ROM with IEC 61850 configuration software
TCSEAK0100	Ethernet configuration kit for ECI850

(1) *List of cancelled references and their replacements:*
- *59602 (base unit with basic UMI, 24 V DC power supply) cancelled and replaced by reference 59603*
- *59606 (base unit with advanced UMI, 24 V DC power supply) cancelled and replaced by reference 59607*
- *59645 (MES108 4I/4O module) cancelled and replaced by reference 59646*
- *59720 (ACE969TP) cancelled and replaced by reference 59723*
- *59721 (ACE969FO)* cancelled and replaced by reference 59724
- *59626 (substation application S23) superseded by reference 59778.*
- *59627 (transformer application T23) superseded by reference 59779.*

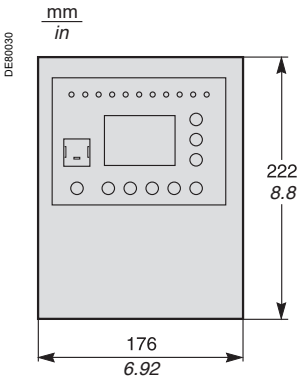

Front view of Sepam.

Dimensions

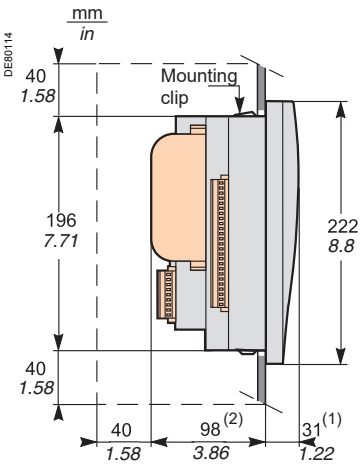

Sepam with advanced UMI and MES114, flush-mounted in front panel.

Clearance for Sepam assembly and wiring.

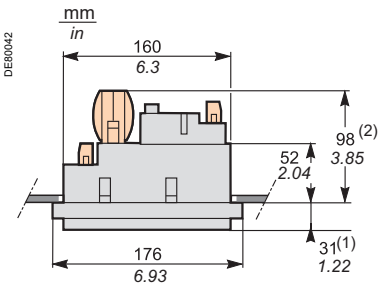

Sepam with advanced UMI and MES114, flush-mounted in front panel.

***(1)** With basic UMI: 23 mm (0.91 in).*
***(2)** With CCA634: 105 mm (4.13 in).*
With CCT640: 115 mm (4.58 in).

Cut-out

Cut-out accuracy must be complied with to ensure good withstand.

For mounting plate between 1.5 mm (0.059 in) and 3 mm (0.12 in) thick

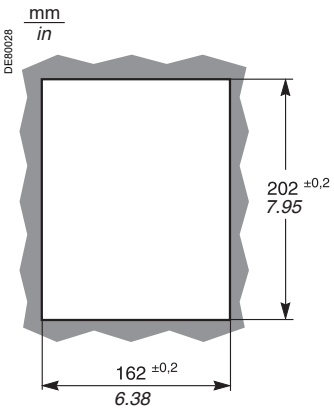

For mounting plate 3.17 mm (0.125 inch) thick

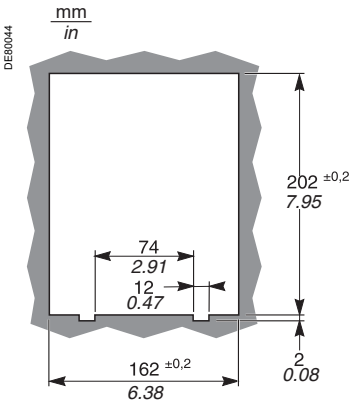

⚠ CAUTION

HAZARD OF CUTS
Trim the edges of the cut-out plates to remove any jagged edges.

Failure to follow these instructions can result in serious injury.

Assembly with AMT840 mounting plate

Used to mount Sepam with basic UMI at the back of the compartment with access to the connectors on the rear panel.
Mounting associated with the use of the remote advanced UMI (DSM303).

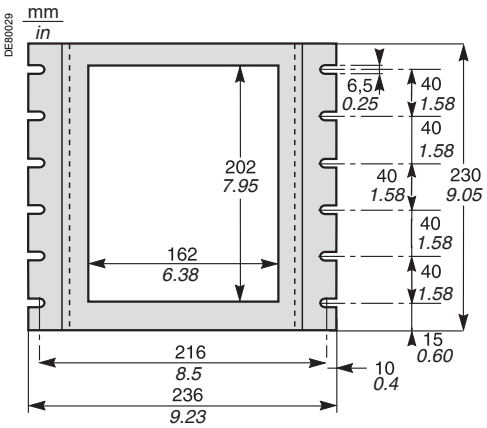

AMT840 mounting plate.

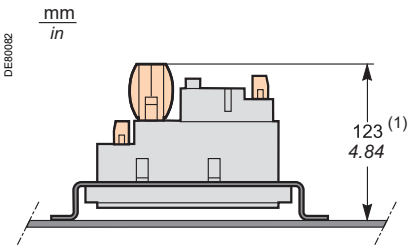

Sepam with basic UMI and MES114, mounted with AMT840 plate.
Mounting plate thickness: 2 mm (0.079 in).

(1) With CCA634: 130 mm (5.12 In).
With CCT640: 140 mm (5.51 In).

Base unit
Assembly

⚠ ⚠ DANGER

HAZARD OF ELECTRIC SHOCK, ELECTRIC ARC OR BURNS

- Only qualified personnel should install this equipment. Such work should be performed only after reading this entire set of instructions.
- NEVER work alone.
- Turn off all power supplying this equipment before working on or inside it. Consider all sources of power, including the possibility of backfeeding.
- Always use a properly rated voltage sensing device to confirm that all power is off.

Failure to follow these instructions will result in death or serious injury.

The Sepam is simply flush-mounted and secured by its clips. No additional screw type fastening is required.

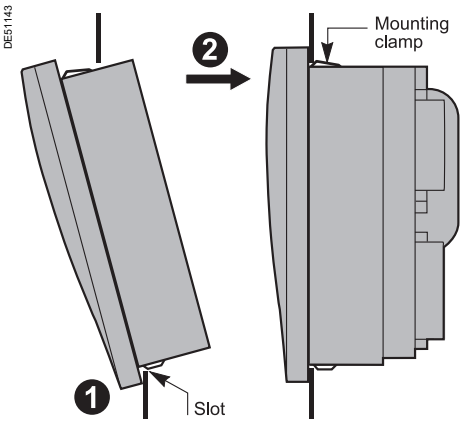

① Present the product as indicated, making sure the metal plate is correctly entered in the groove at the bottom.

② Tilt the product and press on the top part to clamp it with the clips.

Base unit
Description

Sepam components

■ Base unit ①
□ Ⓐ base unit connector:
- power supply
- output relays
- CSH30, 120, 200, 300 or ACE990 input.

Screw-type connector shown (CCA620), or ring lug connector (CCA622)
□ Ⓑ 1 A/5 A CT current input connector (CCA630 or CCA634) or LPCT current input connector (CCA670) or VT voltage input connector (CCT640)
□ Ⓒ communication module link connection (white)
□ Ⓓ remote inter-module link connection (black)
■ Optional input/output module ② (MES114)
□ Ⓛ Ⓜ MES114 module connectors
□ Ⓚ MES114 module connector.

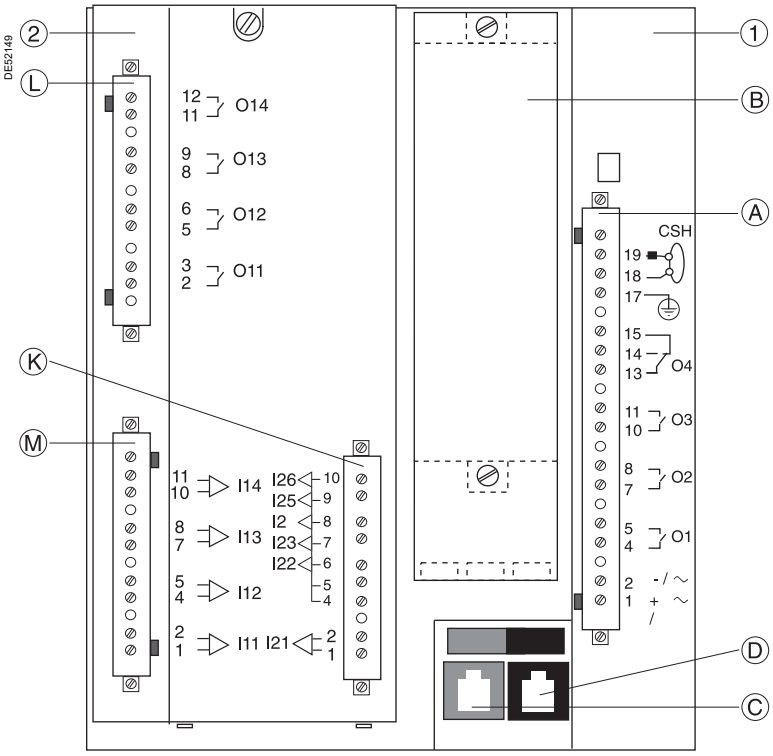

Base unit
Connection

Connection of the base unit

The Sepam connections are made to the removable connectors located on the rear panel. All the connectors are screw-lockable.

NOTICE

LOSS OF PROTECTION OR RISK OF NUISANCE TRIPPING
If the Sepam is no longer supplied with power or is in fail-safe position, the protection functions are no longer active and all the Sepam output relays are dropped out. Check that this operating mode and the watchdog relay wiring are compatible with your installation.
Failure to follow these instructions can result in equipment damage and unwanted shutdown of the electrical installation

DANGER

HAZARD OF ELECTRIC SHOCK, ELECTRIC ARC OR BURNS
■ Only qualified personnel should install this equipment. Such work should be performed only after reading this entire set of instructions.
■ NEVER work alone.
■ Turn off all power supplying this equipment before working on or inside it. Consider all sources of power, including the possibility of backfeeding.
■ Always use a properly rated voltage sensing device to confirm that all power is off.
■ Start by connecting the device to the protective earth and to the functional earth.
■ Screw tight all terminals, even those not in use.
Failure to follow these instructions will result in death or serious injury.

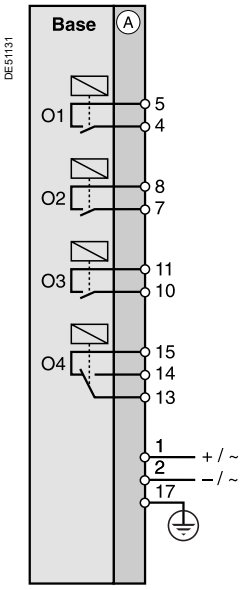

Wiring of the CCA620 connector:
■ Without fitting:
□ 1 wire with maximum cross-section of 0.2 to 2.5 mm^2 (AWG 24-12) or 2 wires with maximum cross-section of 0.2 to 1 mm^2 (AWG 24-18)
□ Stripped length: 8 to 10 mm (0.31 to 0.39 in)
■ With fitting:
□ Recommended wiring with Schneider Electric fitting:
- DZ5CE015D for 1 wire 1.5 mm^2 (AWG 16)
- DZ5CE025D for 1 wire 2.5 mm^2 (AWG 12)
- AZ5DE010D for 2 wires 1 mm^2 (AWG 18)
□ Tube length: 8.2 mm (0.32 in)
□ Stripped length: 8 mm (0.31 in).

Wiring of the CCA622 connector:
■ Ring lug connectors 6.35 mm (1/4 in)
■ Wire with maximum cross-section of 0.2 to 2.5 mm^2 (AWG 24-12)
■ Stripped length: 6 mm (0.236 in)
■ Use an appropriate tool to crimp the lugs onto the wires
■ 2 ring or spade lugs maximum per terminal
■ Tightening torque: 0.7 to 1 N•m (6 to 9 lb-in).

Characteristics of the 4 base unit relay outputs O1, O2, O3, O4
■ O1 and O2 are 2 control outputs, used by the breaking device control function for:
□ O1: breaking device tripping
□ O2: breaking device closing inhibition
■ O3 is a non assigned control output.
■ O4 is a non assigned indication output. It can be assigned to the watchdog function.

Base unit
Connection of current inputs

Types S20/S23/S24/T20/T23/T24/M20

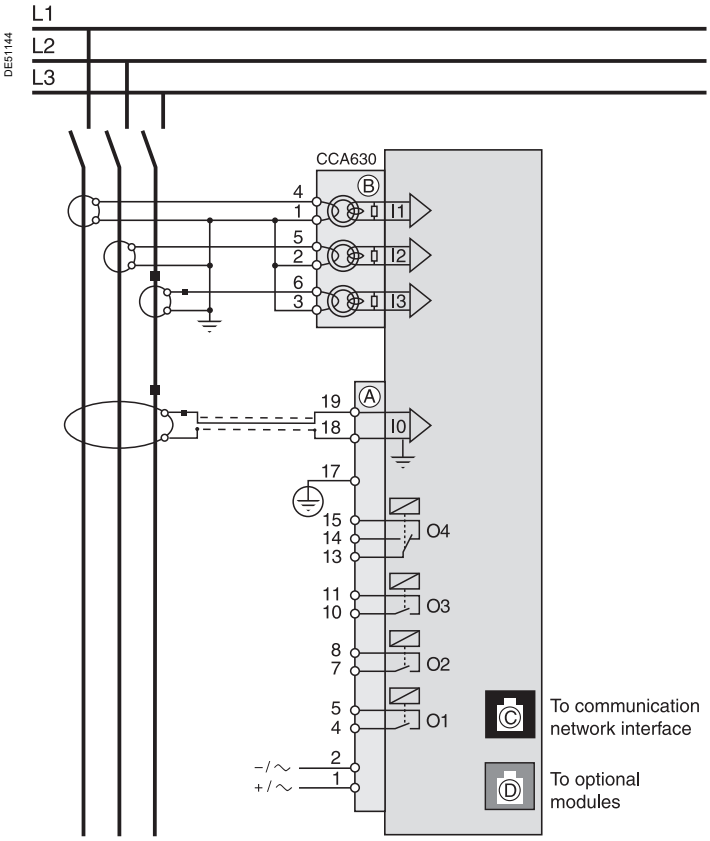

Connection to 1 A/5 A current sensors

Connector	Type	Ref.	Cable
A	Screw-type	CCA620	■ 1 wire 0.2 to 2.5 mm² (AWG 24-12) ■ 2 wires 0.2 to 1 mm² (AWG 24-18)
	Ring lug 6.35 mm (1/4 in)	CCA622	■ Cross-section: 0.2 to 2.5 mm² (AWG 24-12) ■ Stripped length: 6 mm (0.236 in) ■ Tightening torque: 0.7 to 1 N.m (6 to 9 lb-in)
B	Ring lug 4 mm (0.16 in)	CCA630/ CCA634	■ Cross-section: 1.5 to 6 mm² (AWG 16-10) ■ Stripped length: 6 mm (0.236 in) ■ Tightening torque: 1.2 N.m (11 lb-in)
C	RJ45		CCA612
D	RJ45		■ CCA770: L = 0.6 m (2 ft) ■ CCA772: L = 2 m (6.6 ft) ■ CCA774: L = 4 m (13 ft)

Base unit
Other phase current input connection schemes

Variant 1: phase current measurements by 3 x 1 A or 5 A CTs (standard connection)

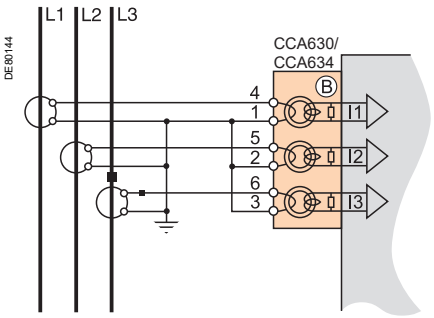

Description
Connection of 3 x 1 A or 5 A sensors to the CCA630 or CCA634 connector.

The measurement of the 3 phase currents allows the calculation of residual current.

Parameters

Sensor type	5 A CT or 1 A CT
Number of CTs	I1, I2, I3
Rated current (In)	1 A to 6250 A

Variant 2: phase current measurement by 2 x 1 A or 5 A CTs

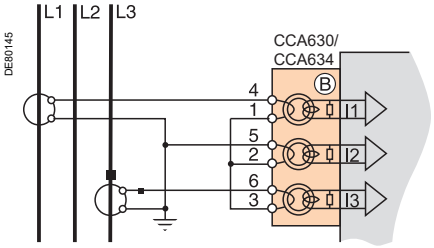

Description
Connection of 2 x 1 A or 5 A sensors to the CCA630 or CCA634 connector.

The measurement of phase currents 1 and 3 is sufficient to ensure all the phase current-based protection functions.
The phase current I2 is only assessed for metering functions, assuming that I0 = 0.

This arrangement does not allow the calculation of residual current.

Parameters

Sensor type	5 A CT or 1 A CT
Number of CTs	I1, I3
Rated current (In)	1 A to 6250 A

Variant 3: phase current measurement by 3 LPCT type sensors

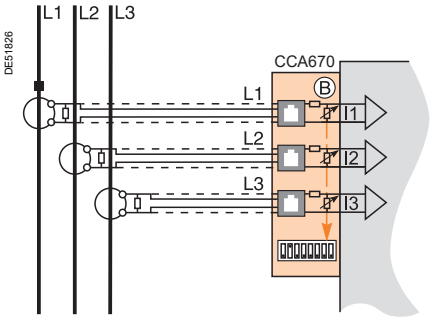

Description
Connection of 3 Low Power Current Transducer (LPCT) type sensors to the CCA670 connector. The connection of only one or two LPCT sensors is not allowed and causes Sepam to go into fail-safe position.

The measurement of the 3 phase currents allows the calculation of residual current.

Parameters

Sensor type	LPCT
Number of CTs	I1, I2, I3
Rated current (In)	25, 50, 100, 125, 133, 200, 250, 320, 400, 500, 630, 666, 1000, 1600, 2000 or 3150 A

Note: *Parameter In must be set 2 twice:*

- *Software parameter setting using the advanced UMI or the SFT2841 software tool*
- *Hardware parameter setting using microswitches on the CCA670 connector*

Base unit
Other residual current input connection schemes

Variant 1: residual current calculation by sum of 3 phase currents

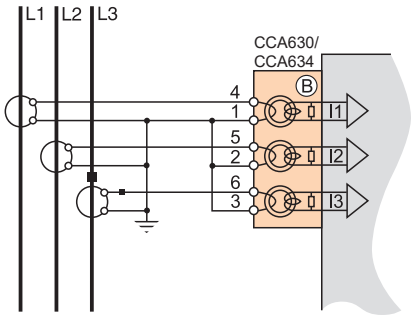

Description
Residual current is calculated by the vector sum of the 3 phase currents I1, I2 and I3, measured by 3 x 1 A or 5 A CTs or by 3 LPCT type sensors.
See current input connection diagrams.

Parameters

Residual current	Rated residual current	Measuring range
Sum of 3 Is	In0 = In, CT primary current	0.1 to 40 In0

Variant 2: residual current measurement by CSH120, CSH200 or CSH300 core balance CT (standard connection)

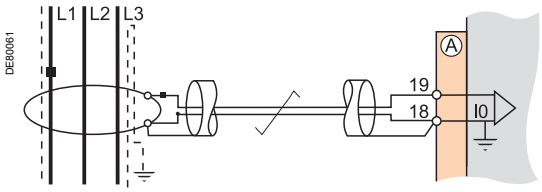

Description
Arrangement recommended for the protection of isolated or compensated neutral systems, in which very low fault currents need to be detected.

Parameters

Residual current	Rated residual current	Measuring range
2 A rating CSH	In0 = 2 A	0.2 to 40 A
20 A rating CSH	In0 = 20 A	2 to 400 A

Variant 3: residual current measurement by 1 A or 5 A CTs and CCA634

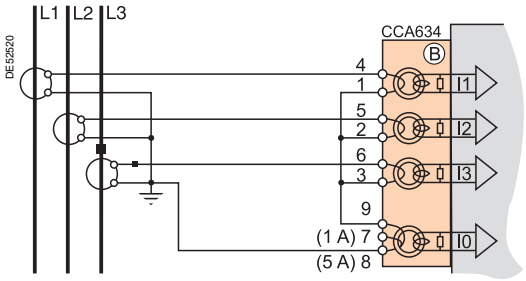

Description
Residual current measurement by 1 A or 5 A CTs.
- Terminal 7: 1 A CT
- Terminal 8: 5 A CT

Parameters

Residual current	Rated residual current	Measuring range
1 A CT	In0 = In, CT primary current	0.1 to 20 In0
5 A CT	In0 = In, CT primary current	0.1 to 20 In0

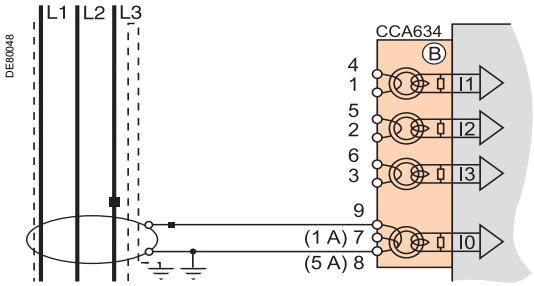

Base unit
Other residual current input connection schemes

Variant 4: residual current measurement by 1 A or 5 A CTs and CSH30 interposing ring CT

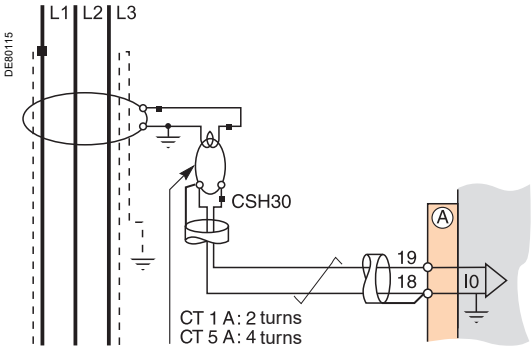

Description

The CSH30 interposing ring CT is used to connect 1 A or 5 A CTs to Sepam to measure residual current:

- Connection of CSH30 interposing ring CT to 1 A CT: make 2 turns through CSH primary
- Connection of CSH30 interposing ring CT to 5 A CT: make 4 turns through CSH primary.

Parameters

Residual current	Rated residual current	Measuring range
1 A CT	In0 = In, CT primary current	0.1 to 20 In0
5 A CT	In0 = In, CT primary current	0.1 to 20 In0

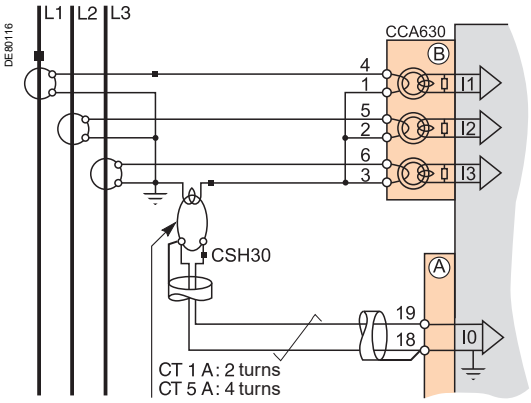

Variant 5: residual current measurement by core balance CT with ratio of 1/n (n between 50 and 1500)

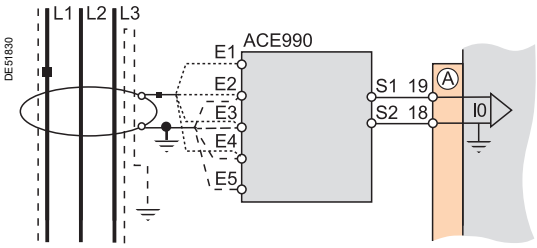

Description

The ACE990 is used as an interface between an MV core balance CT with a ratio of 1/n (50 < n < 1500) and the Sepam residual current input.
This arrangement allows the continued use of existing core balance CTs on the installation.

Parameters

Residual current	Rated residual current	Measuring range
ACE990 - range 1 (0.00578 ⩽ k ⩽ 0.04)	In0 = Ik.n(1)	0.1 to 20 In0
ACE990 - range 2 (0.0578 ⩽ k ⩽ 0.26316)	In0 = Ik.n(1)	0.1 to 20 In0

(1) *n = number of core balance CT turns*
k = factor to be determined according to ACE990 wiring and setting range used by Sepam

Base unit
Connection of low voltage residual current inputs

Variant 1: residual current measurement by CTs on the neutral earthing link (with or without CSH30 interposing ring CT)

Description

Residual current is measured with a 1 A or 5 A CT on the neutral point.

Parameters

Residual current	Rated residual current	Measuring range
1 A CT	In0 = neutral point CT In	0.1 to 20 In0
5 A CT	In0 = neutral point CT In	0.1 to 20 In0

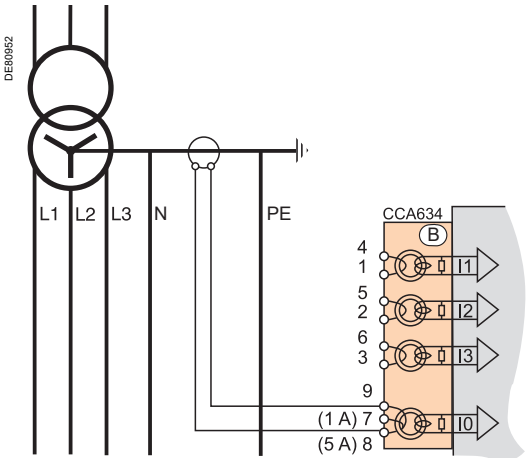

Connection on TN-S network.

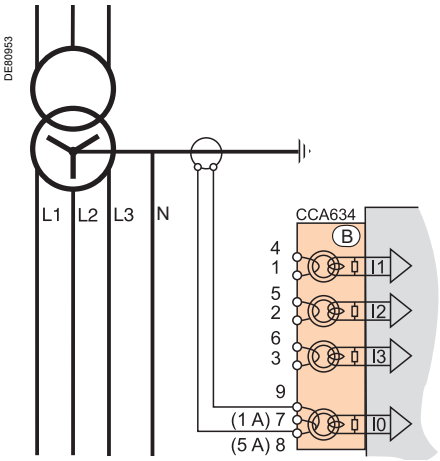

Connection on TT network.

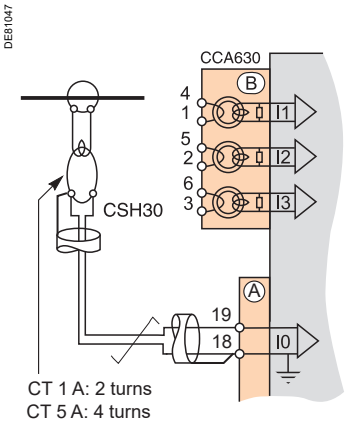

Connection with CSH30.

Variant 2: residual current measurement by CSH120, CSH200 or CSH300 core balance CT on the neutral earthing link

Description

Residual current is measured with a core balance CT on the neutral point. Core balance CTs are recommended for measuring very low fault currents provided that the earth fault current remains below 2 kA. Above this value it is advisable to use the standard variant 1.

Parameters

Residual current	Rated residual current	Measuring range
2 A rating CSH	In0 = 2 A	0.1 to 20 In0
20 A rating CSH	In0 = 20 A	0.1 to 20 In0

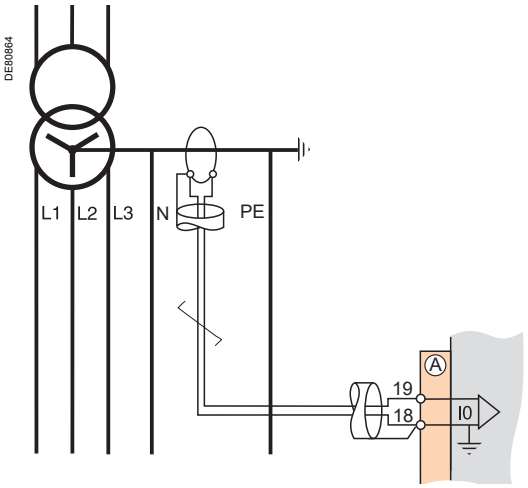

Connection on TN-S network.

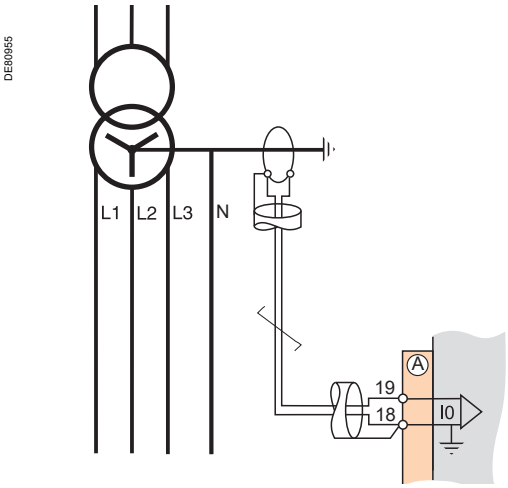

Connection on TT network.

Variant 3: residual current measurement by sum of 3 phase currents and neutral current measurement by CSH120, CSH200 or CSH300 core balance CT

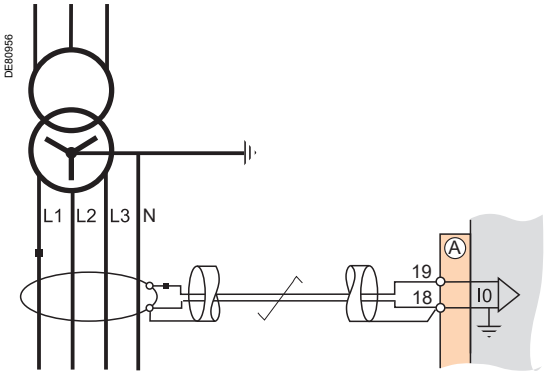

Connection on TN-S and TT networks.

Description

Measurement by core balance CT is recommended for measuring very low fault currents.

Parameters

Residual current	Rated residual current	Measuring range
2 A rating CSH	In0 = 2 A	0.1 to 40 A
20 A rating CSH	In0 = 20 A	0.2 to 400 A

Variant 4: residual current measurement by sum of 3 phase currents and neutral current measurement by 1 A or 5 A CTs and CSH30 interposing ring CT

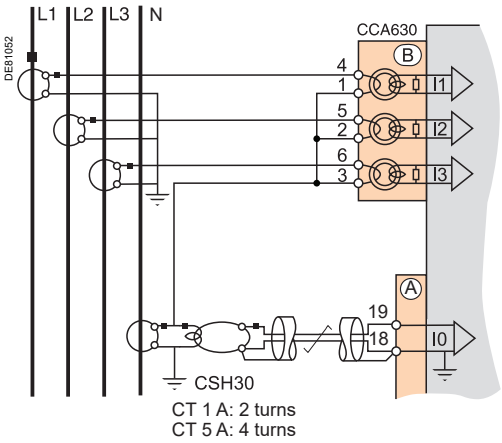

Connection on TN-S and TT networks.

Description

The phase and neutral CTs should have the same primary and secondary currents. The CSH30 interposing ring CT is used to connect 1 A or 5 A CTs to Sepam to measure residual current:

- Connection of CSH30 interposing ring CT to 1 A CT: make 2 turns through CSH primary
- Connection of CSH30 interposing ring CT to 5 A CT: make 4 turns through CSH primary.

Parameters

Residual current	Rated residual current	Measuring range
1 A CT	In0 = phase CT primary current In	0.1 to 20 In0
5 A CT	In0 = phase CT primary current In	0.1 to 20 In0

Variant 5: residual current measurement by sum of 3 phase currents and neutral current measurement by 1 A or 5 A CTs and CCA634 connector

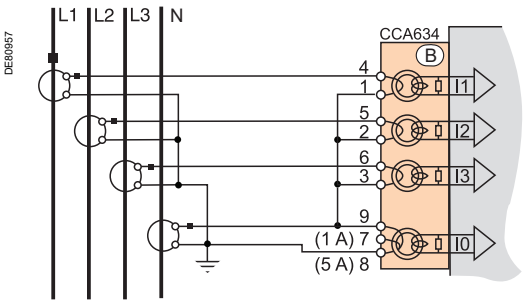

Connection on TN-S and TT networks.

Description

The phase and neutral CTs should have the same primary and secondary currents. Residual current measurement by 1 A or 5 A CTs.

- Terminal 7: 1 A CT
- Terminal 8: 5 A CT

Parameters

Residual current	Rated residual current	Measuring range
1 A CT	In0 = phase CT primary current In	0.1 to 20 In0
5 A CT	In0 = phase CT primary current In	0.1 to 20 In0

Base unit
Connections of input voltage

B21/B22 types

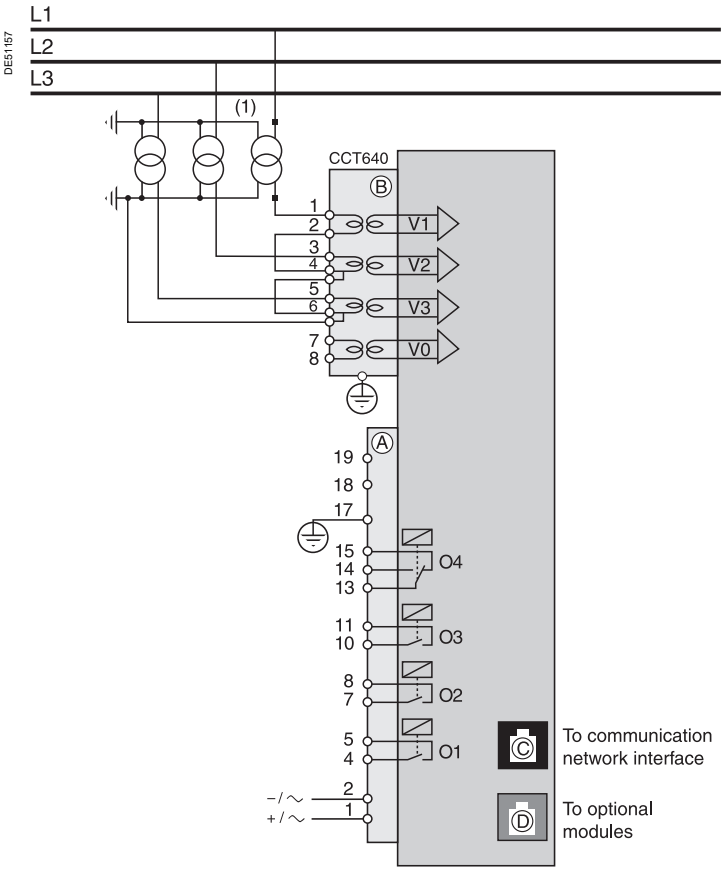

Connector	Type	Reference	Cable
A	Screw-type	CCA620	■ 1 wire 0.2 to 2.5 mm^2 (AWG 24-12) ■ 2 wires 0.2 to 1 mm^2 (AWG 24-18)
	Ring lug 6.35 mm (1/4 in)	CCA622	■ Cross-section: 0.2 to 2.5 mm^2 (AWG 24-12) ■ Stripped length: 6 mm (0.236 in) ■ Tightening torque: 0.7 to 1 N.m (6 to 9 lb-in)
B	Screw-type	CCT640	■ 1 wire 0.2 to 2.5 mm^2 (AWG 24-12) ■ 2 wires 0.2 to 1 mm^2 (AWG 24-18)
C	RJ45		CCA612
D	RJ45		■ CCA770: L = 0.6 m (2 ft) ■ CCA772: L = 2 m (6.6 ft) ■ CCA774: L = 4 m (13 ft)

Base unit
Other voltage input connection schemes

The phase and residual voltage transformer secondary circuits are connected to the CCT640 connector (item Ⓑ) on Sepam series 20 type B units. The CCT640 connector contains 4 transformers which perform isolation and impedance matching of the VTs and Sepam input circuits.

Variant 1: measurement of 3 phase-to-neutral voltages (standard connection)

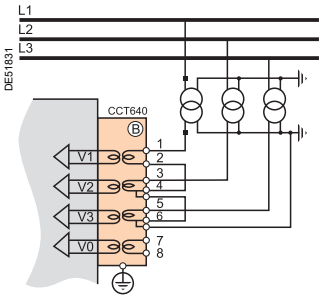

Parameters

Voltages measured by VTs	V1, V2, V3
Residual voltage	Sum of 3Vs

Functions available

Voltages measured	V1, V2, V3
Values calculated	U21, U32, U13, V0, Vd, f
Measurements available	All
Protection functions available (according to type of Sepam)	All

Variant 2: measurement of 3 phase-to-neutral voltages and residual voltage

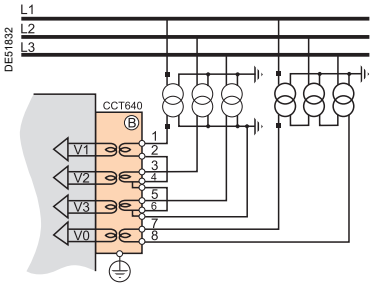

Parameters

Voltages measured by VTs	V1, V2, V3
Residual voltage	External VT

Functions available

Voltages measured	V1, V2, V3, V0
Values calculated	U21, U32, U13, Vd, f
Measurements available	All
Protection functions available (according to type of Sepam)	All

Variant 3: measurement of 2 phase-to-phase voltages

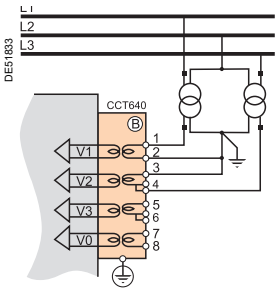

Parameters

Voltages measured by VTs	U21, U32
Residual voltage	None

Functions available

Voltages measured	V1, V2, V3
Values calculated	U13, Vd, f
Measurements available	U21, U32, U13, Vd, f
Protection functions available (according to type of Sepam)	All except 59N, 27S

Variant 4: measurement of 1 phase-to-phase voltage and residual voltage

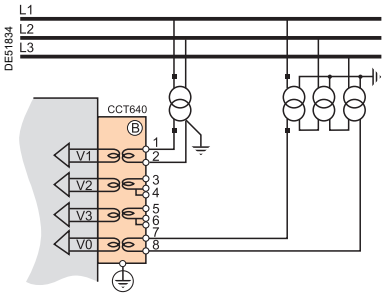

Parameters

Voltages measured by VTs	U21
Residual voltage	External VT

Functions available

Voltages measured	U21, V0
Values calculated	f
Measurements available	U21, V0, f
Protection functions available (according to type of Sepam)	All except 47, 27D, 27S

Variant 5: measurement of 1 phase-to-phase voltage

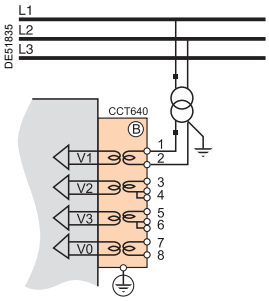

Parameters

Voltages measured by VTs	U21
Residual voltage	None

Functions available

Voltages measured	U21
Values calculated	f
Measurements available	U21, f
Protection functions available (according to type of Sepam)	All except 47, 27D, 59N, 27S

Base unit
Connection of low voltage phase voltage inputs

Variant 1: TN-S and TN-C networks

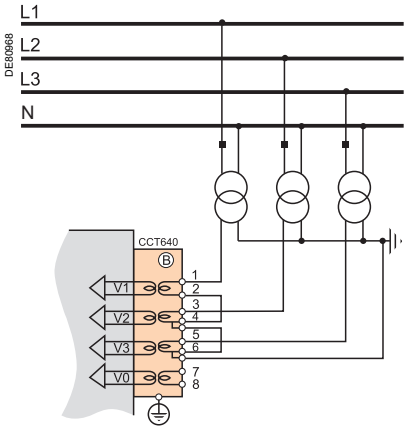

When a ground fault occurs on a TN-S or TN-C network, the neutral potential is not affected: the neutral can act as a reference for the VTs.

Variant 2: TT and IT networks

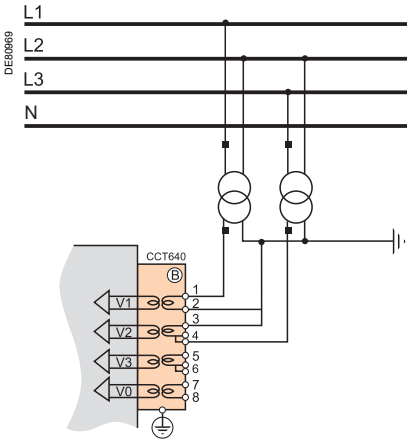

When a ground fault occurs on a TT or IT network, the neutral potential is affected: the neutral cannot act as a reference for the VTs, phase-to-phase voltages must be used on both phases.

1 A/5 A current transformers

ARJA1.

ARJP3.

Function

Sepam may be connected to any standard 1 A and 5 A current transformer.
Schneider Electric offers a range of current transformers to measure primary currents from 50 A to 2500 A.
Please consult us for further information.

Sizing of current transformers

Current transformers should be dimensioned so as not to become saturated by the current values they are required to measure accurately (minimum 5 In).

For overcurrent protection

■ Definite time:
The saturation current must be more than 1.5 times the setting value.
■ IDMT:
The saturation current must be more than 1.5 times the highest working value on the curve.

Practical solution when there is no information on the settings

Rated secondary current in	Rated burden	Accuracy class	CT secondary resistance R_{CT}	Wiring resistance Rf
1 A	2.5 VA	5P 20	< 3 Ω	< 0.075 Ω
5 A	7.5 VA	5P 20	< 0.2 Ω	< 0.075 Ω

CCA630/CCA634 connector

Function

The current transformers (1 A or 5 A) are connected to the CCA630 or CCA634 connector on the rear panel of Sepam:
■ The CCA630 connector is used to connect 3 phase current transformers to Sepam
■ The CCA634 connector is used to connect 3 phase current transformers and a residual current transformer to Sepam.
The CCA630 and CCA634 connectors contain interposing ring CTs with through primaries, which ensure impedance matching and isolation between the 1 A or 5 A circuits and Sepam when measuring phase and residual currents.
The connectors can be disconnected with the power on since disconnection does not open the CT secondary circuit.

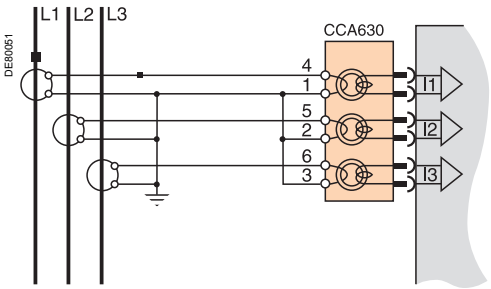

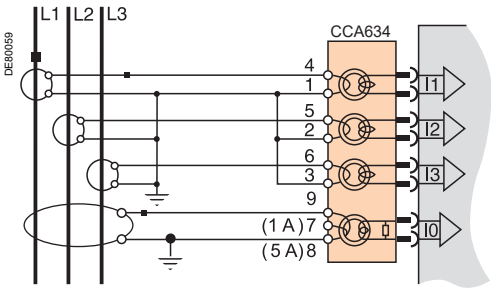

⚠ ⚠ DANGER

HAZARD OF ELECTRIC SHOCK, ELECTRIC ARC OR BURNS

■ Only qualified personnel should install this equipment. Such work should be performed only after reading this entire set of instructions and checking the technical characteristics of the device.
■ NEVER work alone.
■ Turn off all power supplying this equipment before working on or inside it. Consider all sources of power, including the possibility of backfeeding.
■ Always use a properly rated voltage sensing device to confirm that all power is off.
■ To remove current inputs to the Sepam unit, unplug the CCA630 or CCA634 connector without disconnecting the wires from it. The CCA630 and CCA634 connectors ensure continuity of the current transformer secondary circuits.
■ Before disconnecting the wires connected to the CCA630 or CCA634 connector, short-circuit the current transformer secondary circuits.

Failure to follow these instructions will result in death or serious injury.

1 A/5 A current transformers

Connecting and assembling the CCA630 connector

1. Open the 2 side shields for access to the connection terminals. The shields can be removed, if necessary, to make wiring easier. If removed, they must be replaced after wiring.
2. If necessary, remove the bridging strap linking terminals 1, 2 and 3. This strap is supplied with the CCA630.
3. Connect the wires using 4 mm (0.16 in) ring lugs and check the tightness of the 6 screws that guarantee the continuity of the CT secondary circuits.
The connector accommodates wires with cross-sections of 1.5 to 6 mm² (AWG 16-10).
4. Close the side shields.
5. Plug the connector into the 9-pin inlet on the rear panel (item Ⓑ).
6. Tighten the 2 CCA630 connector fastening screws on the rear panel of Sepam.

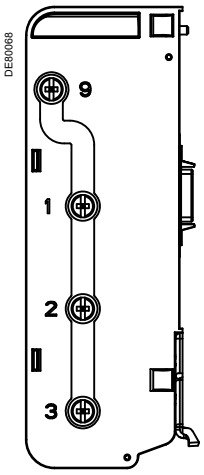

Bridging of terminals 1, 2, 3 and 9

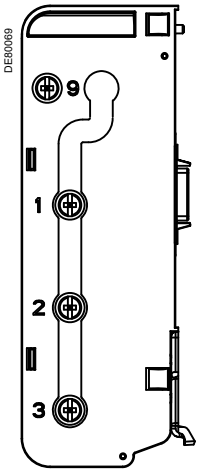

Bridging of terminals 1, 2 and 3

Connecting and assembling the CCA634 connector

1. Open the 2 side shields for access to the connection terminals. The shields can be removed, if necessary, to make wiring easier. If removed, they must be replaced after wiring.
2. According to the wiring required, remove or reverse the bridging strap. This is used to link either terminals 1, 2 and 3, or terminals 1, 2, 3 and 9 (see picture opposite).
3. Use terminal 7 (1 A) or 8 (5 A) to measure the residual current according to the CT secondary.
4. Connect the wires using 4 mm (0.16 in) ring lugs and check the tightness of the 6 screws that guarantee the continuity of the CT secondary circuits.
The connector accommodates wires with cross-sections of 1.5 to 6 mm² (AWG 16-10).
The wires only exit from the base.
5. Close the side shields.
6. Insert the connector pins into the slots on the base unit.
7. Flatten the connector against the unit to plug it into the 9-pin SUB-D connector (principle similar to that of the MES module).
8. Tighten the mounting screw.

NOTICE

HAZARD OF IMPROPER OPERATION
Do not use a CCA634 on connector B1 and residual current input I0 on connector A (terminals 18 and 19) simultaneously.
Even if it is not connected to a sensor, a CCA634 will disturb input I0 on connector A.

Failure to follow these instructions can result in equipment damage.

Voltage transformers

⚠ ⚠ DANGER

HAZARD OF ELECTRIC SHOCK, ELECTRIC ARC OR BURNS

■ Only qualified personnel should install this equipment. Such work should be performed only after reading this entire set of instructions and checking the technical characteristics of the device.
■ NEVER work alone.
■ Turn off all power supplying this equipment before working on or inside it. Consider all sources of power, including the possibility of backfeeding.
■ Always use a properly rated voltage sensing device to confirm that all power is off.
■ Start by connecting the device to the protective earth and to the functional earth.
■ Screw tight all terminals, even those not in use.

Failure to follow these instructions will result in death or serious injury.

The phase and residual voltage transformer secondary circuits are connected to the CCT640 connector, item Ⓑ on B2X type Sepam units.

CCT640 connector

The connector contains 4 transformers which provide impedance matching and isolation between the VTs and Sepam input circuits.
Terminals B1 to B6 are intended for phase voltage measurement (1), and B7 and B8 for residual voltage measurement (case shown, not connected if obtained by the sum of the 3 phase voltages).

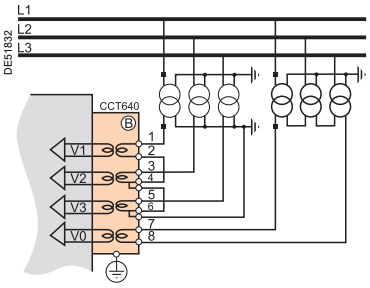

(1) 1, 2 or 3 VTs (case shown).

Installation of the CCT640 connector

1. Insert the connector pins into the slots ① on the base unit.
2. Flatten the connector against the unit to plug it into the 9-pin SUB-D connector (principle similar to that of the MES module).
3. Tighten the mounting screw ②.

Connection

■ The connections are made to the screw type connectors that can be accessed on the rear of the CCT640 (item ③)
■ Wiring with no fittings:
□ 1 wire with maximum cross-section of 0.2 to 2.5 mm² (AWG 24-12) or 2 wires with maximum cross-section of 0.2 to 1 mm² (AWG 24-18)
□ stripped length: 8 to 10 mm (0.315 to 0.39 in)
■ Wiring with fittings:
□ recommended wiring with Schneider Electric fitting:
- DZ5CE015D for 1 wire 1.5 mm² (AWG 16)
- DZ5CE025D for 1 wire 2.5 mm² (AWG 12)
- AZ5DE010D for 2 wires 1 mm² (AWG 18)
□ tube length: 8.2 mm (0.32 in)
□ stripped length: 8 mm (0.31 in)
■ The CCT640 must be earthed (by green/yellow wire + ring lug) on the screw ④ (safety measure in case the CCT640 becomes unplugged).

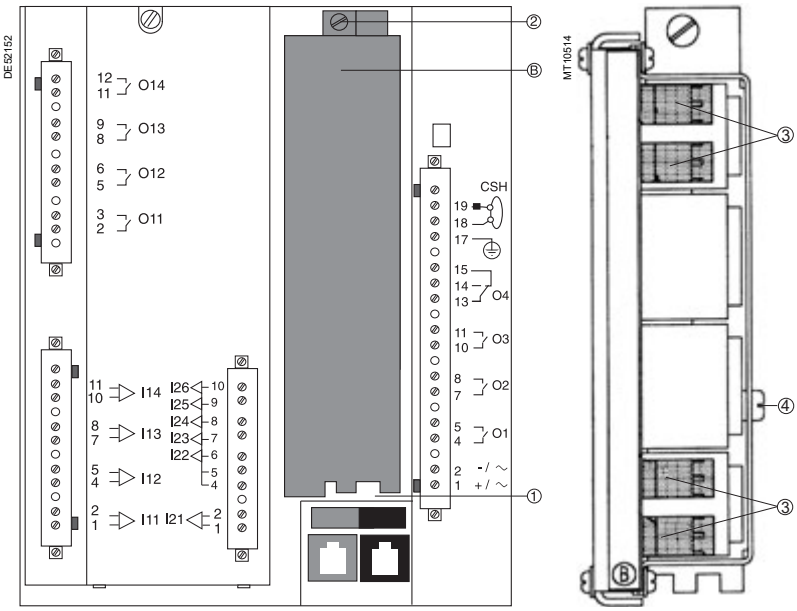

LPCT type current sensors

PE50031

CLP1 LPCT sensor

Function

Low Power Current Transducer (LPCT) type sensors are voltage-output sensors, which are compliant with the IEC 60044-8 standard.
The Schneider Electric range of LPCTs includes the following sensors: CLP1, CLP2, CLP3, TLP130, TLP160 and TLP190.

CCA670/CCA671 connector

DE51674

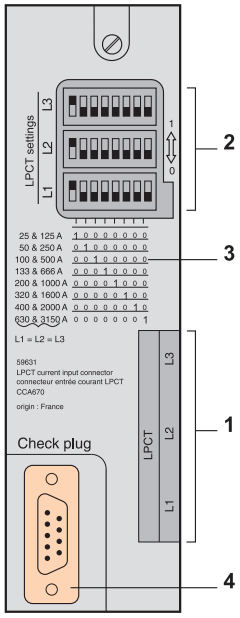

Function

The 3 LPCT sensors are connected to the CCA670 or CCA671 connector on the rear panel of Sepam.
The connection of only one or two LPCT sensors is not allowed and causes Sepam to go into fail-safe position.
The two CCA670 and CCA671 interface connectors serve the same purpose, the difference being the position of the LPCT sensor plugs:
- CCA670: lateral plugs, for Sepam series 20 and Sepam series 40
- CCA671: radial plugs, for Easergy Sepam series 60 and series 80.

Description

1 3 RJ45 plugs to connect the LPCT sensors.
2 3 blocks of microswitches to set the CCA670/CCA671 to the rated phase current value.
3 Microswitch setting/selected rated current equivalency table (2 In values per position).
4 9-pin sub-D connector to connect test equipment (ACE917 for direct connector or via CCA613).

Rating of CCA670/CCA671 connectors

The CCA670/CCA671 connector must be rated according to the rated primary current In measured by the LPCT sensors. In is the current value that corresponds to the rated secondary current of 22.5 mV. The possible settings for In are (in A): 25, 50, 100, 125, 133, 200, 250, 320, 400, 500, 630, 666, 1000, 1600, 2000, 3150.
The selected In value should be:
- entered as a Sepam general setting
- configured by microswitch on the CCA670/CCA671 connector.

Operating mode:
1. Use a screwdriver to remove the shield located in the "LPCT settings" zone; the shield protects 3 blocks of 8 microswitches marked L1, L2, L3.
2. On the L1 block, set the microswitch for the selected rated current to "1" (2 In values per microswitch).
- The table of equivalencies between the microswitch settings and the selected rated current In is printed on the connector
- Leave the 7 other microswitches set to "0".

3. Set the other 2 blocks of switches L2 and L3 to the same position as the L1 block and close the shield.

NOTICE

HAZARD OF NON-OPERATION
- Set the microswitches for the CCA670/CCA671 connector before commissioning the device.
- Check that only one microswitch is in position 1 for each block L1, L2, L3 and that no microswitch is in the center position.
- Check that the microswitch settings on all 3 blocks are identical.

Failure to follow these instructions can result in equipment damage.

LPCT type current sensors
Test accessories

Accessory connection principle

DANGER

HAZARD OF ELECTRIC SHOCK, ELECTRIC ARC OR BURNS

- Only qualified personnel should install this equipment. Such work should be performed only after reading this entire set of instructions.
- NEVER work alone.
- Turn off all power supplying this equipment before working on or inside it. Consider all sources of power, including the possibility of backfeeding.
- Always use a properly rated voltage sensing device to confirm that all power is off.

Failure to follow these instructions will result in death or serious injury.

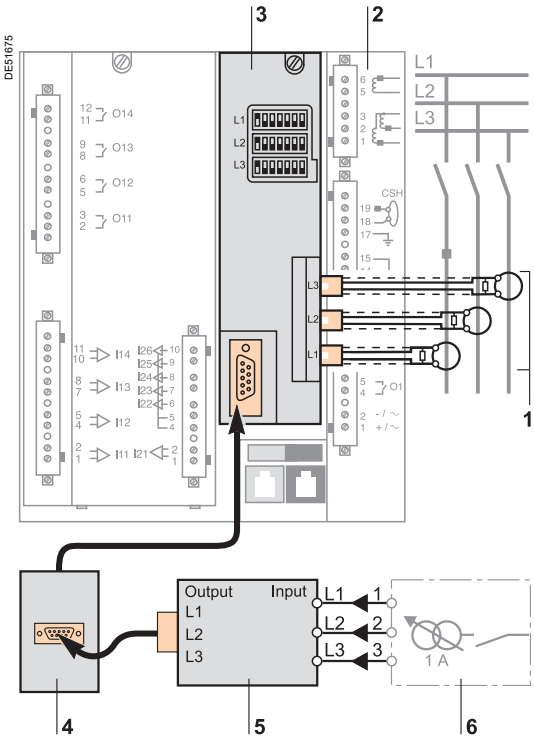

1 LPCT sensor, equipped with a shielded cable fitted with a yellow RJ 45 plug which is plugged directly into the CCA670/CCA671 connector.

2 Sepam protection unit.

3 CCA670/CCA671 connector, LPCT voltage interface, with microswitch setting of rated current:
- CCA670: lateral plugs for Sepam series 20 and Sepam series 40
- CCA671: radial plugs for Easergy Sepam series 60 and series 80.

4 CCA613 remote test plug, flush-mounted on the front of the cubicle and equipped with a 3-meter (9.8 ft) cord to be plugged into the test plug of the CCA670/CCA671 interface connector (9-pin sub-D).

5 ACE917 injection adapter, to test the LPCT protection chain with a standard injection box.

6 Standard injection box.

ACE917 injection adapter

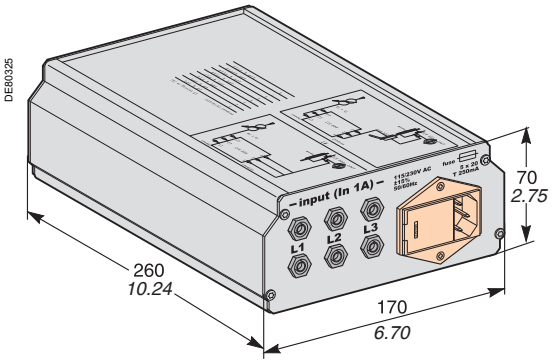

Function

The ACE917 adapter is used to test the protection chain with a standard injection box, when Sepam is connected to LPCT sensors.
The ACE917 adapter is inserted between:
- ■ The standard injection box
- ■ The LPCT test plug:
- □ integrated in the Sepam CCA670/CCA671 interface connector
- □ or transferred by means of the CCA613 accessory.

The following are supplied with the ACE917 injection adapter:
- ■ Power supply cord
- ■ 3-meter (9.8 ft) cord to connect the ACE917 to the LPCT test plug on CCA670/CCA671 or CCA613.

Characteristics

Power supply	115/230 V AC
Protection by time-delayed fuse 5 mm x 20 mm (0.2 x 0.79 in)	0.25 A rating

CCA613 remote test plug

Function

The CCA613 test plug, flush-mounted on the front of the cubicle, is equipped with a 3-meter (9.8 ft) cord to transfer data from the test plug integrated in the CCA670/CCA671 interface connector on the rear panel of Sepam.

Dimensions

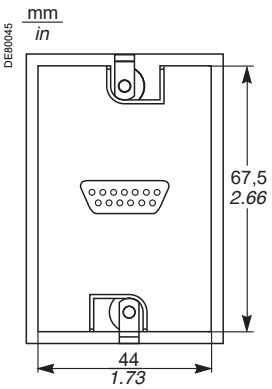

Front view with cover lifted.

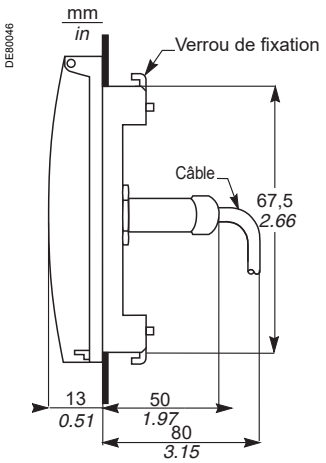

Right side view.

⚠ CAUTION

HAZARD OF CUTS
Trim the edges of the cut-out plates to remove any jagged edges.

Failure to follow these instructions can result in injury.

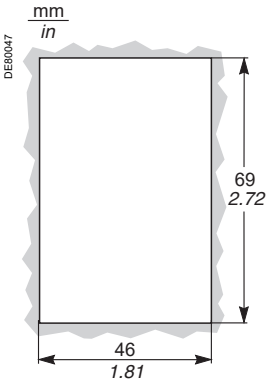

Cut-out.

CSH120, CSH200 and CSH300 Core balance CTs

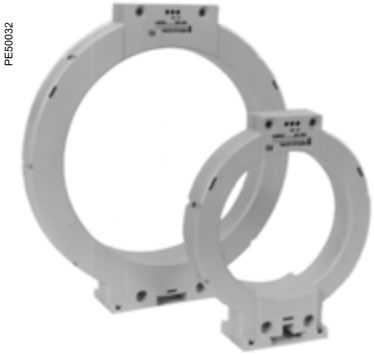

CSH120 and CSH200 core balance CTs.

Function

The specifically designed CSH120, CSH200 and CSH300 core balance CTs are for direct residual current measurement. The only difference between them is the diameter. Due to their low voltage insulation, they can only be used on cables.

Note:

- *The CSH280 core balance CT available in the Motorpact offer is compatible with Sepam.*
- *You must use an interface ACE990 with a core balance CT other than a CSH120, a CSH200 or a CSH300, even if this core balance CT has the same transformation ratio than a CSH120, a CSH200 or a CSH300.*

Characteristics

		CSH120	CSH200	CSH300
Inner diameter		120 mm (4.7 in)	196 mm (7.72 in)	291 mm (11.46 in)
Weight		0.6 kg (1.32 lb)	1.4 kg (3.09 lb)	2.4 Kg (5.29 lb)
Accuracy	1 CT	±5% at 20°C (68°F)		
		±6% max. from -25°C to 70°C (-13°F to +158°F)		
	2 CTs in parallel	-	±10%	-
Transformation ratio		1/470		
Maximum permissible current	1 CT	20 kA - 1 s		
	2 CTs in parallel	-	6 kA - 1 s	-
Operating temperature		-25°C to +70°C (-13°F to +158°F)		
Storage temperature		-40°C to +85°C (-40°F to +185°F)		

Dimensions

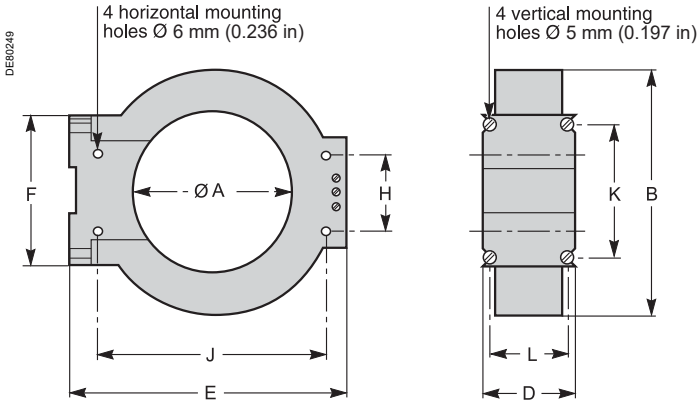

Dimensions	A	B	D	E	F	H	J	K	L
CSH120 (in)	120 (4.75)	164 (6.46)	44 (1.73)	190 (7.48)	80 (3.15)	40 (1.57)	166 (6.54)	65 (2.56)	35 (1.38)
CSH200 (in)	196 (7.72)	256 (10.1)	46 (1.81)	274 (10.8)	120 (4.72)	60 (2.36)	254 (10)	104 (4.09)	37 (1.46)
CSH300 (in)	291 (11.46	360 (14.17)	46 (1.81)	390 (15.35)	120 (4.72)	60 (2.36)	369 (14.53)	104 (4.09)	37 (1.46)

CSH120, CSH200 and CSH300 Core balance CTs

⚠ ⚠ DANGER

HAZARD OF ELECTRIC SHOCK, ELECTRIC ARC OR BURNS

- Only qualified personnel should install this equipment. Such work should be performed only after reading this entire set of instructions and checking the technical characteristics of the device.
- NEVER work alone.
- Turn off all power supplying this equipment before working on or inside it. Consider all sources of power, including the possibility of backfeeding.
- Always use a properly rated voltage sensing device to confirm that all power is off.
- Only CSH120, CSH200 or CSH300 core balance CTs can be used for direct residual current measurement. Other residual current sensors require the use of an intermediate device, CSH30, ACE990 or CCA634.
- Install the core balance CTs on insulated cables.
- Cables with a rated voltage of more than 1000 V must also have an earthed shielding.

Failure to follow these instructions will result in death or serious injury.

Assembly

Group the MV cable (or cables) in the middle of the core balance CT.
Use non-conductive binding to hold the cables.
Remember to insert the 3 medium voltage cable shielding earthing cables through the core balance.

DE51678

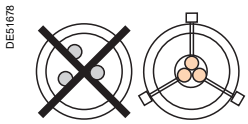

E40465

Assembly on MV cables.

E40466

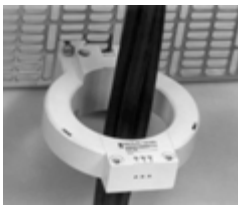

Assembly on mounting plate.

NOTICE

HAZARD OF NON-OPERATION

Do not connect the secondary circuit of the CSH core balance CTs to earth.
This connection is made in Sepam.

Failure to follow these instructions can result in equipment damage.

Connection

Connection to Sepam series 20 and Sepam series 40

To residual current I0 input, on connector (A), terminals 19 and 18 (shielding).

Connection to Easergy Sepam series 60

To residual current I0 input, on connector (E), terminals 15 and 14 (shielding).

Connection to Easergy Sepam series 80

- To residual current I0 input, on connector (E), terminals 15 and 14 (shielding)
- To residual current I'0 input, on connector (E), terminals 18 and 17 (shielding).

Recommended cable

- Sheathed cable, shielded by tinned copper braid
- Minimum cable cross-section 0.93 mm² (AWG 18)
- Resistance per unit length < 100 mΩ/m (30.5 mΩ/ft)
- Minimum dielectric strength: 1000 V (700 Vrms)
- Connect the cable shielding in the shortest manner possible to Sepam
- Flatten the connection cable against the metal frames of the cubicle.

The connection cable shielding is grounded in Sepam. Do not ground the cable by any other means.

The maximum resistance of the Sepam connection wiring must not exceed 4 Ω (i.e. 20 m maximum for 100 mΩ/m or 66 ft maximum for 30.5 mΩ/ft).

DE80231

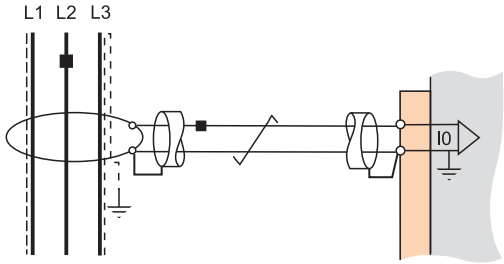

Connecting 2 CSH200 CTs in parallel

It is possible to connect 2 CSH200 CTs in parallel if the cables will not fit through a single CT, by following the instructions below:

- Fit one CT per set of cables.
- Make sure the wiring polarity is correct.

The maximum permissible current at the primary is limited to 6 kA - 1 s for all cables.

DE80231

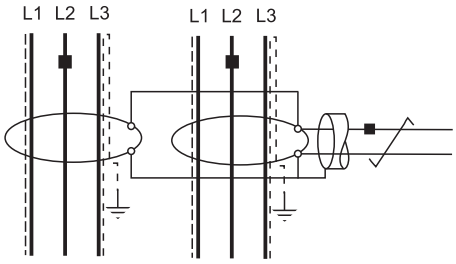

CSH30 interposing ring CT

E40468

Vertical assembly of CSH30 interposing ring CT.

E44717

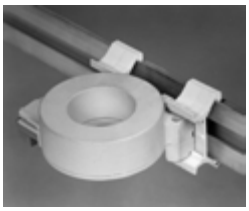

Horizontal assembly of CSH30 interposing ring CT.

Function

The CSH30 interposing ring CT is used as an interface when the residual current is measured using 1 A or 5 A current transformers.

Characteristics

Weight	0.12 kg (0.265 lb)
Assembly	On symmetrical DIN rail In vertical or horizontal position

Dimensions

DE80023

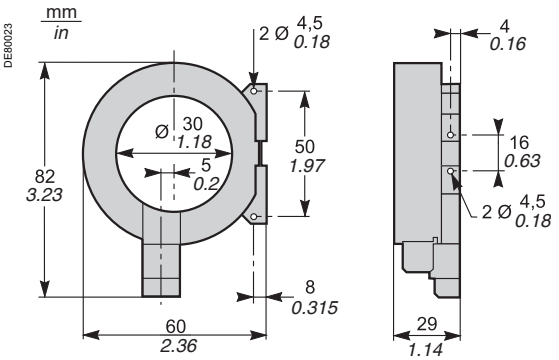

6

CSH30 interposing ring CT

Connection

The CSH30 is adapted for the type of current transformer, 1 A or 5 A, by the number of turns of the secondary wiring through the CSH30 interposing ring CT:
- 5 A rating - 4 turns
- 1 A rating - 2 turns

Connection to 5 A secondary circuit

PE50033

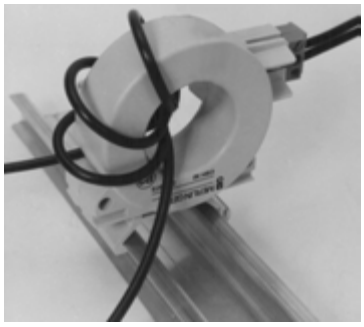

1. Plug into the connector.
2. Insert the transformer secondary wire through the CSH30 interposing ring CT 4 times.

Connection to 1 A secondary circuit

PE50034

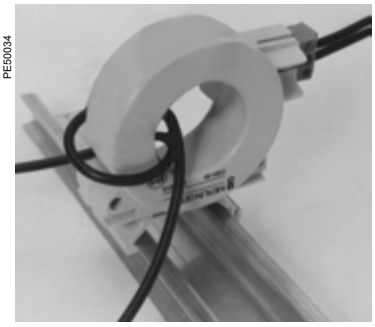

1. Plug into the connector.
2. Insert the transformer secondary wire through the CSH30 interposing ring CT twice.

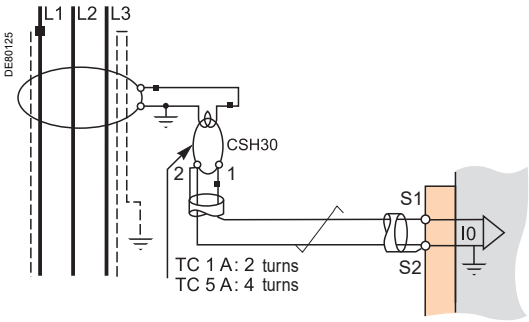

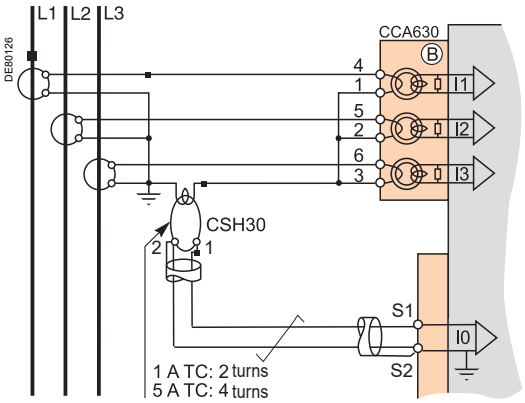

Connection to Sepam series 20 and Sepam series 40
To residual current I0 input, on connector (A), terminals 19 and 18 (shielding).

Connection to Easergy Sepam series 60
To residual current I0 input, on connector (E) terminals 15 and 14 (shielding).

Connection to Easergy Sepam series 80
- To residual current I0 input, on connector (E), terminals 15 and 14 (shielding)
- To residual current I'0 input, on connector (E), terminals 18 and 17 (shielding).

Recommended cable
- Sheathed cable, shielded by tinned copper braid
- Minimum cable cross-section 0.93 mm² (AWG 18) (max. 2.5 mm², AWG 12)
- Resistance per unit length < 100 mΩ/m (30.5 mΩ/ft)
- Minimum dielectric strength: 1000 V (700 Vrms)
- Maximum length: 2 m (6.6 ft).

It is essential for the CSH30 interposing ring CT to be installed near Sepam (Sepam - CSH30 link less than 2 m (6.6 ft) long).
Flatten the connection cable against the metal frames of the cubicle.
The connection cable shielding is grounded in Sepam. Do not ground the cable by any other means.

ACE990 Core balance CT interface

ACE990 core balance CT interface.

Function

The ACE990 is used to adapt measurements between an MV core balance CT with a ratio of 1/n (50 ⩽ n ⩽ 1500), and the Sepam residual current input.

Note: *You must use an interface ACE990 with a core balance CT other than a CSH120, CSH200 or a CSH300 even if this core balance CT has the same transformation ratio than a CSH120, CSH200 or CSH300.*

Characteristics

Weight	0.64 kg (1.41 lb)
Assembly	Mounted on symmetrical DIN rail
Amplitude accuracy	±1%
Phase accuracy	< 2°
Maximum permissible current	20 kA - 1 s (on the primary winding of an MV core balance CT with a ratio of 1/50 that does not saturate)
Operating temperature	-25°C à +70°C (-13°F à +158°F)
Storage temperature	-25°C to +70°C (-13°F to +158°F)

Description and dimensions

(E) ACE990 input terminal block, for connection of the core balance CT.
(S) ACE990 output terminal block, for connection of the Sepam residual current.

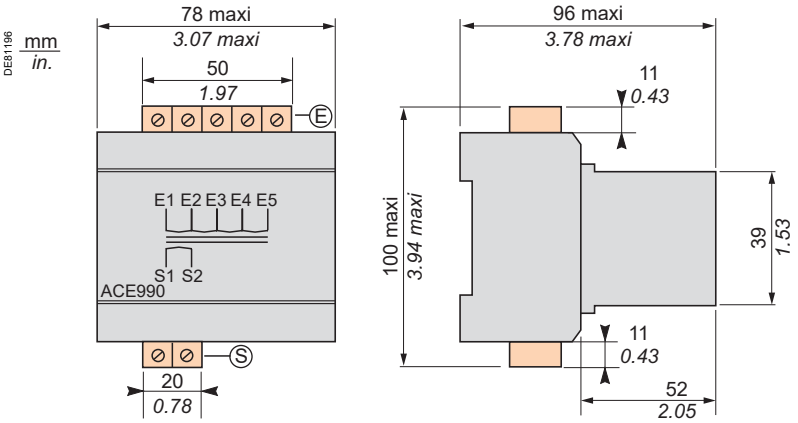

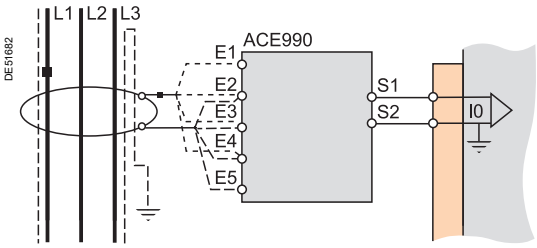

Connection

Connection of core balance CT

Only one core balance CT can be connected to the ACE990 interface.
The secondary circuit of the MV core balance CT is connected to 2 of the 5 ACE990 interface input terminals. To define the 2 input terminals, it is necessary to know the following:

- Core balance CT ratio (1/n)
- Core balance CT power
- Close approximation of rated current In0

(In0 is a general setting in Sepam and defines the earth fault protection setting range between 0.1 In0 and 15 In0).

The table below can be used to determine:

- The 2 ACE990 input terminals to be connected to the MV core balance CT secondary
- The type of residual current sensor to set
- The exact value of the rated residual current In0 setting, given by the following formula: **In0 = k x number of core balance CT turns**

with k the factor defined in the table below.

The core balance CT must be connected to the interface in the right direction for correct operation: the MV core balance CT secondary output terminal S1 must be connected to the terminal with the lowest index (Ex).

K value	ACE990 input terminals to be connected	Residual current sensor setting	Min. MV core balance CT power
0.00578	E1 - E5	ACE990 - range 1	0.1 VA
0.00676	E2 - E5	ACE990 - range 1	0.1 VA
0.00885	E1 - E4	ACE990 - range 1	0.1 VA
0.00909	E3 - E5	ACE990 - range 1	0.1 VA
0.01136	**E2 - E4**	**ACE990 - range 1**	**0.1 VA**
0.01587	E1 - E3	ACE990 - range 1	0.1 VA
0.01667	E4 - E5	ACE990 - range 1	0.1 VA
0.02000	E3 - E4	ACE990 - range 1	0.1 VA
0.02632	E2 - E3	ACE990 - range 1	0.1 VA
0.04000	E1 - E2	ACE990 - range 1	0.2 VA
0.05780	E1 - E5	ACE990 - range 2	2.5 VA
0.06757	E2 - E5	ACE990 - range 2	2.5 VA
0.08850	E1 - E4	ACE990 - range 2	3.0 VA
0.09091	E3 - E5	ACE990 - range 2	3.0 VA
0.11364	E2 - E4	ACE990 - range 2	3.0 VA
0.15873	E1 - E3	ACE990 - range 2	4.5 VA
0.16667	E4 - E5	ACE990 - range 2	4.5 VA
0.20000	E3 - E4	ACE990 - range 2	5.5 VA
0.26316	E2 - E3	ACE990 - range 2	7.5 VA

Example:
Given a core balance CT with a ratio of 1/400 2 VA, used within a measurement range of 0.5 A to 60 A.
How should it be connected to Sepam via the ACE990?

1. *Choose a close approximation of the rated current In0, i.e. 5 A.*
2. *Calculate the ratio: approx. In0/number of turns = 5/400 = 0.0125.*
3. *Find the closest value of k in the table opposite to k = 0.01136.*
4. *Check the mininum power required for the core balance CT: 2 VA core balance CT > 0.1 VA V OK.*
5. *Connect the core balance CT secondary to ACE990 input terminals E2 and E4.*
6. *Set Sepam up with: In0 = 0.0136 x 400 = 4.544 A.*

Select the closest value rounded to a single decimal (example: 4.544 A rounded to 4.5 A)

This value of In0 can be used to monitor current between 0.45 A and 67.5 A.

Wiring of MV core balance CT secondary circuit:

- *MV core balance CT S1 output to ACE990 E2 input terminal*
- *MV core balance CT S2 output to ACE990 E4 input terminal.*

Connection to Sepam series 20 and Sepam series 40

To residual current I0 input, on connector (A), terminals 19 and 18 (shielding).

Connection to Easergy Sepam series 60

To residual current I0 input, on connector (E), terminals 15 and 14 (shielding).

Connection to Easergy Sepam series 80

- To residual current I0 input, on connector (E), terminals 15 and 14 (shielding)
- To residual current I'0 input, on connector (E), terminals 18 and 17 (shielding).

Recommended cables

- Cable between core balance CT and ACE990: less than 50 m (160 ft) long
- Sheathed cable, shielded by tinned copper braid between the ACE990 and Sepam, maximum length 2 m (6.6 ft)
- Cable cross-section between 0.93 mm² (AWG 18) and 2.5 mm² (AWG 12)
- Resistance per unit length less than 100 mΩ/m (30.5 mΩ/ft)
- Minimum dielectric strength: 100 Vrms.

Connect the connection cable shielding in the shortest manner possible (2 cm or 5.08 in maximum) to the shielding terminal on the Sepam connector.
Flatten the connection cable against the metal frames of the cubicle.
The connection cable shielding is grounded in Sepam. Do not ground the cable by any other means.

MES114 modules

10 input/4 output MES114 module.

Function

The 4 outputs included on the Sepam series 20 and 40 base unit can be extended by adding an optional MES114 module with 10 inputs and 4 outputs, available in 3 versions:

- MES114: 10 DC inputs, voltage from 24 V DC to 250 V DC
- MES114E: 10 inputs, voltage 110-125 V AC or V DC
- MES114F: 10 inputs, voltage 220-250 V AC or V DC.

Characteristics

MES114 module	
Weight	0.28 kg (0.617 lb)
Operating temperature	-25°C to +70°C (-13°F to +158°F)
Environmental characteristics	Same characteristics as Sepam base units

Logic inputs		MES114	MES114E		MES114F	
Voltage		24 to 250 V DC	110 to 125 V DC	110 V AC	220 to 250 V DC	220 to 240 V AC
Range		19.2 to 275 V DC	88 to 150 V DC	88 to 132 V AC	176 to 275 V DC	176 to 264 V AC
Frequency		-	-	47 to 63 Hz	-	47 to 63 Hz
Typical consumption		3 mA	3 mA	3 mA	3 mA	3 mA
Typical switching threshold		14 V DC	82 V DC	58 V AC	154 V DC	120 V AC
Input limit voltage	At state 1	⩾ 19 V DC	⩾ 88 V DC	⩾ 88 V AC	⩾ 176 V DC	⩾ 176 V AC
	At state 0	⩽ 6 V DC	⩽ 75 V DC	⩽ 22 V AC	⩽ 137 V DC	⩽ 48 V AC
Isolation of inputs from other isolated groups		Enhanced	Enhanced	Enhanced	Enhanced	Enhanced

O11 control relay output						
Voltage	DC	24/48 V DC	127 V DC	220 V DC	250 V DC	-
	AC (47.5 to 63 Hz)	-	-	-	-	100 to 240 V AC
Continuous current		8 A	8 A	8 A	8 A	8 A
Breaking capacity	Resistive load	8/4 A	0.7 A	0.3 A	0.2 A	8 A
	L/R load < 20 ms	6/2 A	0.5 A	0.2 A	-	-
	L/R load < 40 ms	4/1 A	0.2 A	0.1 A	-	-
	p.f. load > 0.3	-	-	-	-	5 A
Making capacity		< 15 A for 200 ms				
Isolation of outputs from other isolated groups		Enhanced				

Annunciation relay output O12 to O14						
Voltage	DC	24/48 V DC	127 V DC	220 V DC	250 V DC	-
	AC (47.5 to 63 Hz)	-	-	-	-	100 to 240 V AC
Continuous current		2 A	2 A	2 A	2 A	2 A
Breaking capacity	Resistive load	2/1 A	0.6 A	0.3 A	0.2 A	-
	L/R load < 20 ms	2/1 A	0.5 A	0.15 A	-	-
	p.f. load > 0.3	-	-	-	-	1 A
Making capacity		< 15 A for 200 ms				
Isolation of outputs in relation to other isolated groups		Enhanced				

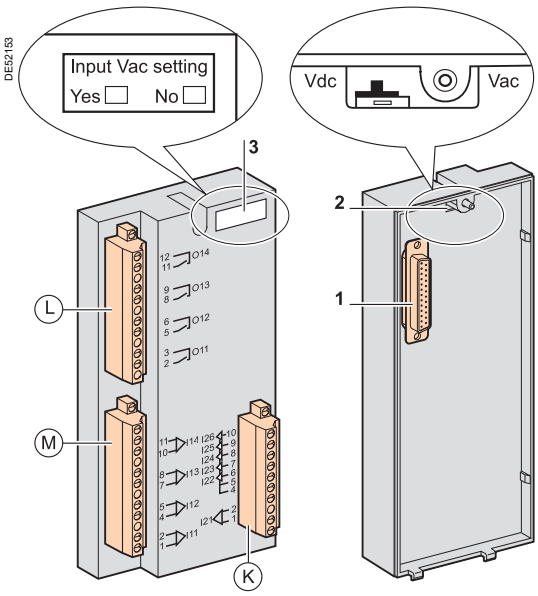

Description

Ⓛ, Ⓜ and Ⓚ: 3 removable, lockable screw-type connectors
Ⓛ: connectors for 4 relay outputs:
- O11: 1 control relay output
- O12 to O14: 3 annunciation relay outputs

Ⓜ: connectors for 4 independent logic inputs I11 to I14
Ⓚ: connectors for 6 logic inputs:
- I21: 1 independent logic input
- I22 to I26: 5 common point logic inputs.

1 25-pin sub-D connector to connect the module to the base unit.
2 Voltage selector switch for MES114E and MES114F module inputs, to be set to:
- V DC for 10 DC voltage inputs (default setting)
- V AC for 10 AC voltage inputs.

3 Label to be filled in to indicate the chosen parameter setting for MES114E and MES114F input voltages.

The parameter setting status can be accessed in the "Sepam Diagnosis" screen of the SFT2841 software tool.
Parameter setting of the inputs for AC voltage (V AC setting) inhibits the "operating time measurement" function.

Assembly

1. Insert the 2 pins on the MES module into the slots **1** on the base unit.
2. Flatten the module up against the base unit to plug it into the connector **2**.
3. Tighten the mounting screw **3**.

Connection

The inputs are potential-free and the DC power supply source is external.

DANGER

HAZARD OF ELECTRIC SHOCK, ELECTRIC ARC OR BURNS

- Only qualified personnel should install this equipment. Such work should be performed only after reading this entire set of instructions and checking the technical characteristics of the device.
- NEVER work alone.
- Turn off all power supplying this equipment before working on or inside it. Consider all sources of power, including the possibility of backfeeding.
- Always use a properly rated voltage sensing device to confirm that all power is off.
- Screw tight all terminals, even those not in use.

Failure to follow these instructions will result in death or serious injury.

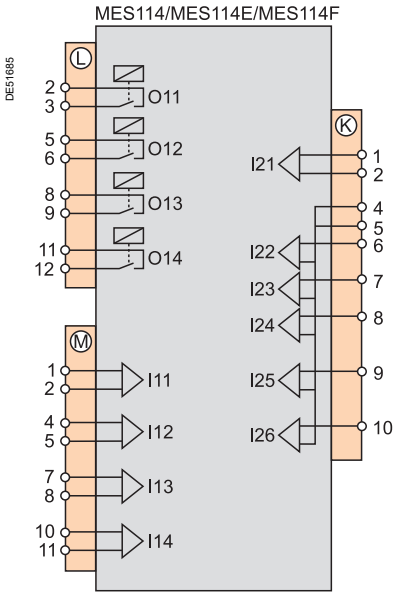

Wiring of connectors Ⓛ, Ⓜ and Ⓚ:

- Wiring with no fittings:
  - 1 wire with maximum cross-section 0.2 to 2.5 mm^2 (AWG 24-12)
  - or 2 wires with maximum cross-section 0.2 to 1 mm^2 (AWG 24-18)
  - stripped length: 8 to 10 mm (0.315 to 0.39 in)
- Wiring with fittings:
  - terminal 5, recommended wiring with Telemecanique fitting:
    - DZ5CE015D for 1 wire 1.5 mm^2 (AWG 16)
    - DZ5CE025D for 1 wire 2.5 mm^2 (AWG 12)
    - AZ5DE010D for 2 wires 1 mm^2 (AWG 18)
  - tube length: 8.2 mm (0.32 in)
  - stripped length: 8 mm (0.31 in).

Optional remote modules
Connection

The optional MET148-2, MSA141 or DSM303 modules are connected to the base unit connector Ⓓ by a series of links using prefabricated cords which come in 3 different lengths with black fittings.
- CCA770 (L = 0.6 m or 2 ft)
- CCA772 (L = 2 m or 6.6 ft)
- CCA774 (L = 4 m or 13.1 ft).

The DSM303 module may only be connected at the end of the series.

Maximum configuration

A maximum of three modules may be connected to the base unit, in compliance with the module order and maximum connection lengths indicated in the table:

Base	Cord	Module 1	Cord	Module 2	Cord	Module 3
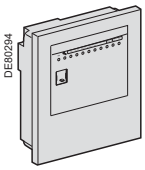		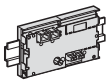		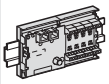		
	CCA772	MSA141	CCA770	MET148-2	CCA774	DSM303
	CCA772	MSA141	CCA770	MET148-2	CCA772	MET148-2
	CCA772	MET148-2	CCA770	MET148-2	CCA774	DSM303

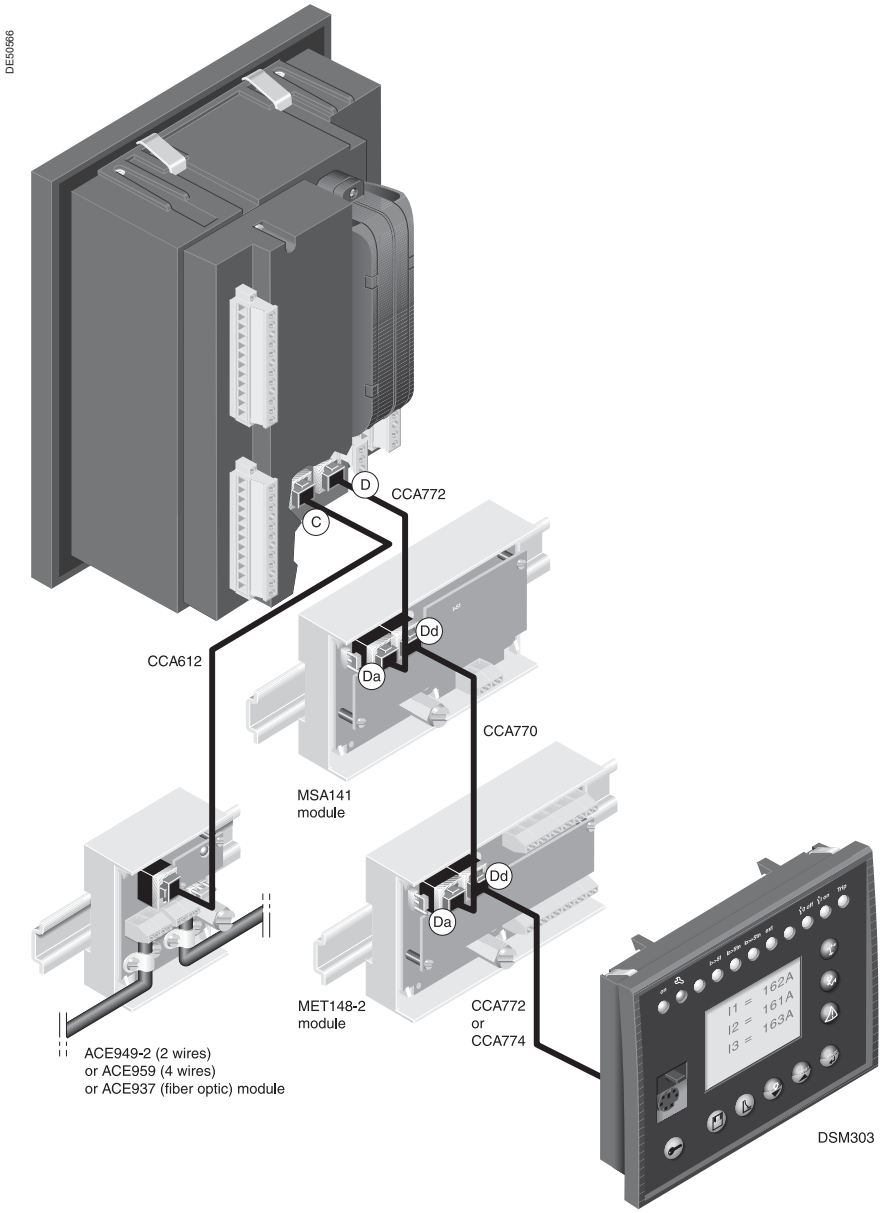

MET148-2
Temperature sensor module

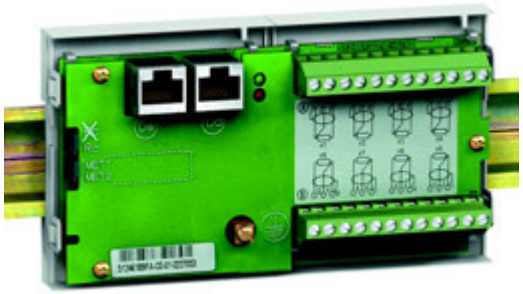

Function

The MET148-2 module can be used to connect 8 temperature sensors (RTDs) of the same type:
- Pt100, Ni100 or Ni120 type RTDs, according to parameter setting
- 3-wire temperature sensors
- A single module for each Sepam series 20 base unit, to be connected by one of the CCA770 (0.6 or 2 ft), CCA772 (2 m or 6.6 ft) or CCA774 (4 m or 13.1 ft) cords
- 2 modules for each Sepam series 40, Easergy Sepam series 60 or series 80 base unit, to be connected by CCA770 (0.6 or 2 ft), CCA772 (2 m or 6.6 ft) or CCA774 (4 m or 13.1 ft) cords

The temperature measurement (e.g. in a transformer or motor winding) is utilized by the following protection functions:
- Thermal overload (to take ambient temperature into account)
- Temperature monitoring.

Characteristics

MET148-2 module		
Weight	0.2 kg (0.441 lb)	
Assembly	On symmetrical DIN rail	
Operating temperature	-25°C to +70°C (-13°F to +158°F)	
Environmental characteristics	Same characteristics as Sepam base units	
Temperature sensors	**Pt100**	**Ni100/Ni120**
Isolation from earth	None	None
Current injected in RTD	4 mA	4 mA

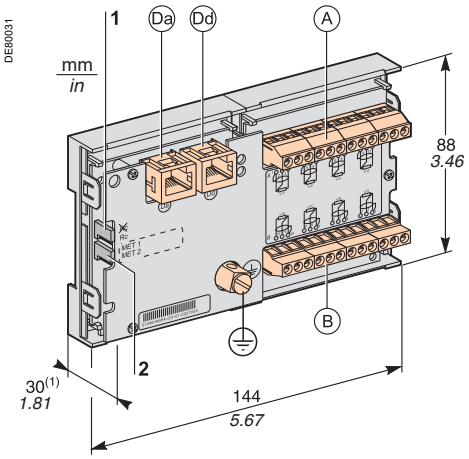

(1) 70 mm (2.8 in) with CCA77x cord connected.

Description and dimensions

(A) Terminal block for RTDs 1 to 4

(B) Terminal block for RTDs 5 to 8

(Da) RJ45 connector to connect the module to the base unit with a CCA77x cord

(Dd) RJ45 connector to link up the next remote module with a CCA77x cord (according to application)

(⏚) Grounding/earthing terminal

1 Jumper for impedance matching with load resistor (Rc), to be set to:
- ~~Rc~~, if the module is not the last interlinked module (default position)
- Rc, if the module is the last interlinked module.

2 Jumper used to select module number, to be set to:
- MET1: 1st MET148-2 module, to measure temperatures T1 to T8 (default position)
- MET2: 2nd MET148-2 module, to measure temperatures T9 to T16 (for Sepam series 40, Easergy Sepam series 60 and series 80 only).

MET148-2
Temperature sensor module

Connection

⚠ ⚠ DANGER

HAZARD OF ELECTRIC SHOCK, ELECTRIC ARC OR BURNS

- Only qualified personnel should install this equipment. Such work should be performed only after reading this entire set of instructions and checking the technical characteristics of the device.
- NEVER work alone.
- Check that the temperature sensors are isolated from dangerous voltages.

Failure to follow these instructions will result in death or serious injury.

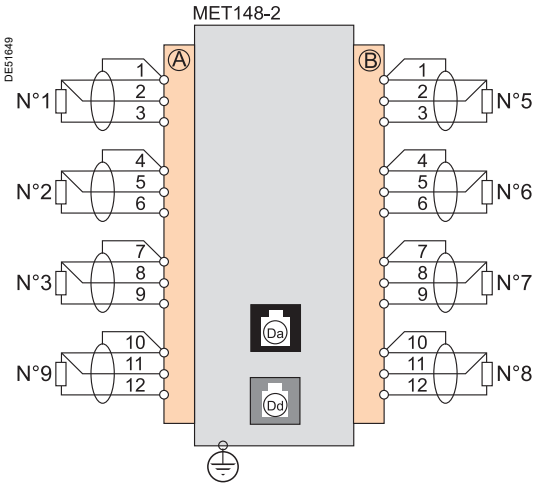

Connection of the earthing terminal
By tinned copper braid with cross-section ⩾ 6 mm² (AWG 10) or cable with cross-section ⩾ 2.5 mm² (AWG 12) and length ⩽ 200 mm (7.9 in), fitted with a 4 mm (0.16 in) ring lug.
Check the tightness (maximum tightening torque 2.2 Nm or 19.5 lb-in).

Connection of RTDs to screw-type connectors
- 1 wire with cross-section 0.2 to 2.5 mm² (AWG 24-12)
- or 2 wires with cross-section 0.2 to 1 mm² (AWG 24-18)

Recommended cross-sections according to distance:
- Up to 100 m (330 ft) ⩾ 1 mm² (AWG 18)
- Up to 300 m (990 ft) ⩾ 1.5 mm² (AWG 16)
- Up to 1 km (0.62 mi) ⩾ 2.5 mm² (AWG 12)

Maximum distance between sensor and module: 1 km (0.62 mi)

Wiring precautions
- It is preferable to use shielded cables

The use of unshielded cables can cause measurement errors which vary in degree according to the level of surrounding electromagnetic disturbance
- Only connect the shielding at the MET148-2 end, in the shortest manner possible, to the corresponding terminals of connectors (A) and (B)
- Do not connect the shielding at the RTD end.

Accuracy derating according to wiring
The error Δt is proportional to the length of the cable and inversely proportional to the cable cross-section:

$$\Delta t(°C) = 2 \times \frac{L(km)}{S(mm^2)}$$

- ±2.1°C/km for 0.93 mm² cross-section (AWG 18)
- ±1°C/km for 1.92 mm² cross-section (AWG 14).

MSA141 Analog output module

MSA141 analog output module.

Function

The MSA141 module converts one of the Sepam measurements into an analog signal:

- Selection of the measurement to be converted by parameter setting
- 0-1 mA, 0-10 mA, 4-20 mA, 0-20 mA analog signal according to parameter setting
- Scaling of the analog signal by setting minimum and maximum values of the converted measurement.

Example: the setting used to have phase current 1 as a 0-10 mA analog output with a dynamic range of 0 to 300 A is:

- minimum value = 0
- maximum value = 3000

- A single module for each Sepam base unit, to be connected by one of the CCA770 (0.6m or 2 ft), CCA772 (2m or 6.6 ft) or CCA774 (4m or 13.1 ft) cords.

The analog output can also be remotely managed via the communication network.

Characteristics

MSA141 module	
Weight	0.2 kg (0.441 lb)
Assembly	On symmetrical DIN rail
Operating temperature	-25°C to +70°C (-13°F to +158°F)
Environmental characteristics	Same characteristics as Sepam base units
Analog output	
Current	4 -20 mA, 0-20 mA, 0-10 mA, 0-1 mA
Scaling (no data input checking)	Minimum value
	Maximum value
Load impedance	< 600 Ω (including wiring)
Accuracy	0.5% full scale or 0,01 mA

Measurements available	Unit	Series 20	Series 40	Series 60/ Series 80
Phase and residual currents	0.1 A	■	■	■
Phase-to-neutral and phase-to-phase voltages	1 V	■	■	■
Frequency	0.01 Hz	■	■	■
Thermal capacity used	1%	■	■	■
Temperatures	1°C (1°F)	■	■	■
Active power	0.1 kW		■	■
Reactive power	0.1 kvar		■	■
Apparent power	0.1 kVA		■	■
Power factor	0.01			■
Remote setting via communication link		■	■	■

MSA141 Analog output module

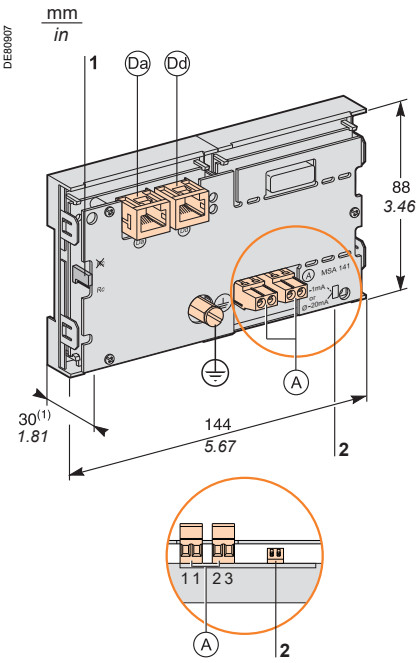

(1) 70 mm (2.8 in) with CCA77x cord connected.

Description and dimensions

(A) Terminal block for analog output

(Da) RJ45 socket to connect the module to the base unit with a CCA77x cord

(Dd) RJ45 socket to link up the next remote module with a CCA77x cord (according to application)

(⏚) Earthing terminal

1 Jumper for impedance matching with load resistor (Rc), to be set to:
- ~~Rc~~, if the module is not the last interlinked module (default position)
- Rc, if the module is the last interlinked module.

2 Micro-switches to set the analog output type:

Micro-switches	Position	Output type
1 2	low (default position)	0-20 mA
		4-20 mA
		0-10 mA
1 2	high	0-1 mA

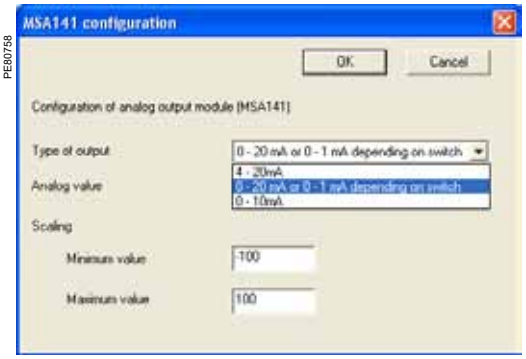

Analog output module (MSA141) setting window.

Output Setting

The analog output type is configured in 2 steps:

1. Hardware setting: set the 2 micro-switches:
- on low position for a 0-20 mA, 4-20 mA or 0-10 mA output type
- on high position for a 0-1 mA output type.

2. Software configuration: select the desired output type in the SFT2841 setting software **Analog output module (MSA141) setting** window and validate by pressing the **OK** button.

Note : *The 0-1 mA output works only if the* ***0-20 mA or 0-1 mA depending on switch*** *output type has been set in the SFT2841 setting software (step 2).*

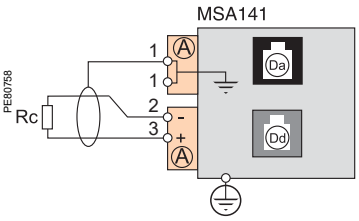

Connection

Connection of the earthing terminal

By tinned copper braid with cross-section ⩾ 6 mm² (AWG 10) or cable with cross-section ⩾ 2.5 mm² (AWG 12) and length ⩽ 200 mm (7.9 in), equipped with a 4 mm (0.16 in) ring lug.

Check the tightness (maximum tightening torque 2.2 Nm or 19.5 lb-in).

Connection of analog output to screw-type connector
- 1 wire with cross-section 0.2 to 2.5 mm² (AWG 24-12)
- or 2 wires with cross-section 0.2 to 1 mm² (AWG 24-18).

Wiring precautions
- It is preferable to use shielded cables
- Use tinned copper braid to connect the shielding at least at the MSA141 end.

DSM303
Remote advanced UMI module

DSM303 remote advanced UMI module.

Function

When associated with a Sepam that does not have its own advanced user-machine interface, the DSM303 offers all the functions available on a Sepam integrated advanced UMI.
It can be installed on the front panel of the cubicle in the most suitable operating location:
- Reduced depth < 30 mm (1.2 in)
- A single module for each Sepam, to be connected by one of the CCA772 (2 m or 6.6 ft) or CCA774 (4 m or 13.1 ft) cords.

The module cannot be connected to Sepam units with integrated advanced UMIs.

Characteristics

DSM303 module	
Weight	0.3 kg (0.661 lb)
Assembly	Flush-mounted
Operating temperature	-25°C to +70°C (-13°F to +158°F)
Environmental characteristics	Same characteristics as Sepam base units

DSM303
Remote advanced UMI module

Description and dimensions

The module is simply flush-mounted and secured by its clips. No additional screw-type fastening is required.

Front view

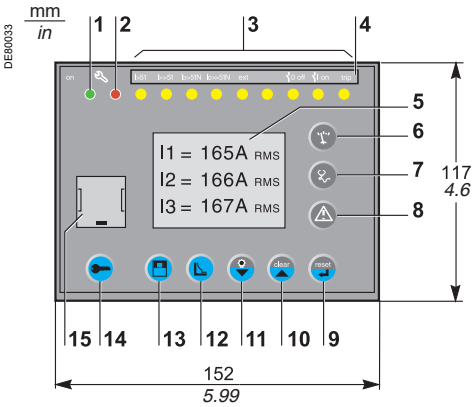

Side view

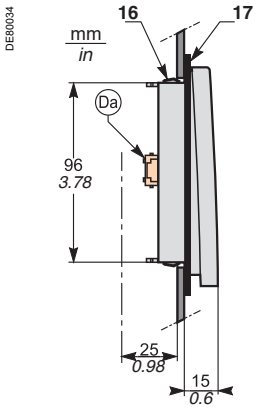

1 Green LED: Sepam on
2 Red LED:
- steadily on: module unavailable
- flashing: Sepam link unavailable

3 9 yellow LEDs
4 Label identifying the LEDs
5 Graphic LCD screen
6 Display of measurements
7 Display of switchgear, network and machine diagnosis data
8 Display of alarm messages
9 Sepam reset (or confirm data entry)
10 Alarm acknowledgment and clearing (or move cursor up)
11 LED test (or move cursor down)
12 Access to protection settings
13 Access to Sepam parameters
14 Entry of 2 passwords
15 PC connection port
16 Mounting clip
17 Gasket to ensure NEMA 12 tightness
(gasket supplied with the DSM303 module, to be installed if necessary)

(Da) RJ45 lateral output connector to connect the module to the base unit with a CCA77x cord.

Cut-out for flush-mounting (mounting plate thickness < 3 mm or 0.12 in)

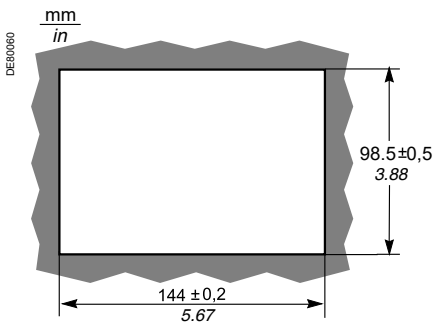

⚠ CAUTION

HAZARD OF CUTS
Trim the edges of the cut-out plates to remove any jagged edges.

Failure to follow these instructions can result in injury.

Connection

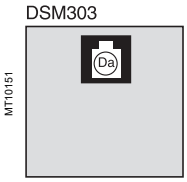

(Da) RJ45 socket to connector the module to the base unit with a CCA77x cord.

The DSM303 module is always the last interlinked remote module and it systematically ensures impedance matching by load resistor (Rc).

Communication accessory selection guide

There are 2 types of Sepam communication accessory:
■ Communication interfaces, which are essential for connecting Sepam to the communication network
■ Converters and other accessories, as options, which are used for complete implementation of the communication network.

Communication-interface selection guide

		ACE949-2	ACE959	ACE937	ACE969TP-2		ACE969FO-2		ACE850TP	ACE850FO
Type of Sepam										
Sepam series 20		■	■	■	■	■	■	■		
Sepam series 40/60/80		■	■	■	■	■	■	■	■	■
Type of network										
		S-LAN or E-LAN (1)	S-LAN or E-LAN (1)	S-LAN or E-LAN (1)	S-LAN	E-LAN	S-LAN	E-LAN	S-LAN and E-LAN	S-LAN and E-LAN
Protocol										
Modbus RTU		■	■	■	■ (3)	■	■ (3)	■		
DNP3					■ (3)		■ (3)			
IEC 60870-5-103					■ (3)		■ (3)			
Modbus TCP/IP									■	■
IEC 61850									■	■
Physical interface										
RS 485	2-wire	■			■	■		■		
	4-wire		■							
Fiber optic ST	Star			■			■			
	Ring						■ (2)			
10/100 base Tx	2 ports								■	
100 base Fx	2 ports									■
Power supply										
DC		Supplied by Sepam	Supplied by Sepam	Supplied by Sepam	24 to 250 V		24 to 250 V		24 to 250 V	24 to 250 V
AC					110 to 240 V		110 to 240 V		110 to 240 V	110 to 240 V
See details on page		**page 178**	**page 179**	**page 180**	**page 181**		**page 181**			

(1) *Only one connection possible, S-LAN or E-LAN.*
(2) *Except with the Modbus RTU protocol.*
(3) *Not supported simultaneously (1 protocol per application).*

6

Converter selection guide

	ACE909-2	ACE919CA	ACE919CC	EGX100	EGX300	ECI850
To supervisor						
Physical interface	1 RS 232 port	1 port 2-wire RS 485	1 port 2-wire RS 485	1 Ethernet port 10/100 base T	1 Ethernet port 10/100 base T	1 Ethernet port 10/100 base T
Modbus RTU	■ (1)	■ (1)	■ (1)			
IEC 60870-5-103	■ (1)	■ (1)	■ (1)			
DNP3	■ (1)	■ (1)	■ (1)			
Modbus TCP/IP				■	■	
IEC 61850						■
To Sepam						
Physical interface	1 port 2-wire RS 485	1 port 2-wire RS 485	1 port 2-wire RS 485	1 port RS 485 2-wire or 4-wire	1 port RS 485 2-wire or 4-wire	1 port RS 485 2-wire or 4-wire
RS 485 distributed power supply	■	■	■			
Modbus RTU	■ (1)	■ (1)	■ (1)	■	■	■
IEC 60870-5-103	■ (1)	■ (1)	■ (1)			
DNP3	■ (1)	■ (1)	■ (1)			
Power supply						
DC			24 to 48 V	24 V	24 V	24 V
AC	110 to 220 V	110 to 220 V				
See details on page	**page 187**	**page 188**	**page 188**	**See EGX100 manual**	**See EGX300 manual**	**page 190**

(1) *The supervisor protocol is the same as for Sepam.*

Note: *All these interfaces support the E-LAN protocol.*

Connection of communication interfaces
Connection cords

CCA612 connection cord

Function
The CCA612 prefabricated cord is used to connect ACE949-2, ACE959, ACE937, ACE969TP-2 and ACE969FO-2 communication interfaces:
- To the white communication port (C) on a Sepam series 20 or series 40 base unit
- To the white communication port (C1) on an Easergy Sepam series 60 base unit.
- To the white communication ports (C1) or (C2) on an Easergy Sepam series 80 base unit.

Characteristics
- Length = 3 m (9.8 ft)
- Fitted with 2 white RJ45 connectors.

Sepam series 20 and Sepam series 40

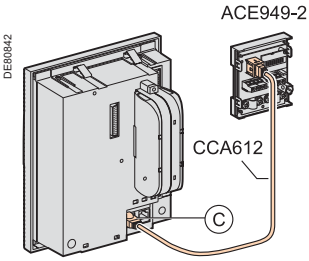

Easergy Sepam series 60

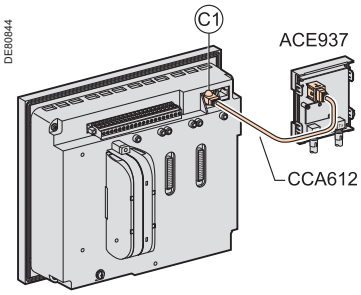

Easergy Sepam series 80

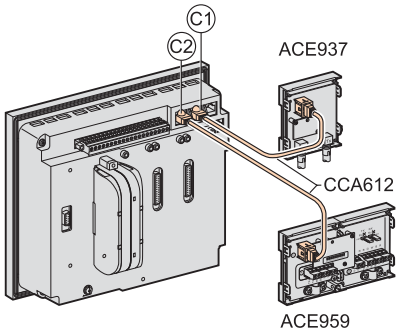

CCA614 connection cord

Function
The CCA614 prefabricated cord is used to connect ACE850TP and ACE850FO communication interfaces:
- To the white communication port (C) on a Sepam series 40 base unit
- To the blue communication port (F) on an Easergy Sepam series 60 or Sepam series 80 base unit.

Characteristics
- Length = 3 m (9.8 ft)
- Fitted with 2 blue RJ45 connectors
- Minimum curvature radius = 50 mm (1.97 in)

NOTICE

HAZARD OF DEFECTIVE COMMUNICATION

- Never use the (C2) and (F) communication ports on an Easergy Sepam series 80 simultaneously.
- The only communication ports on an Easergy Sepam series 80 unit that can be used simultaneously are ports (C1) and (C2) or ports (C1) and (F).

Failure to follow these instructions can result in equipment damage.

Sepam series 40

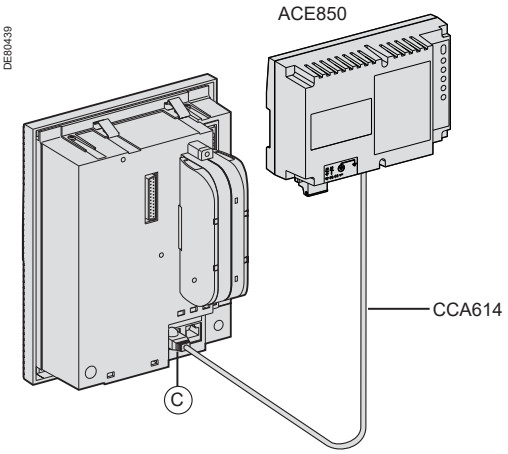

Easergy Sepam series 60 and Easergy Sepam series 80

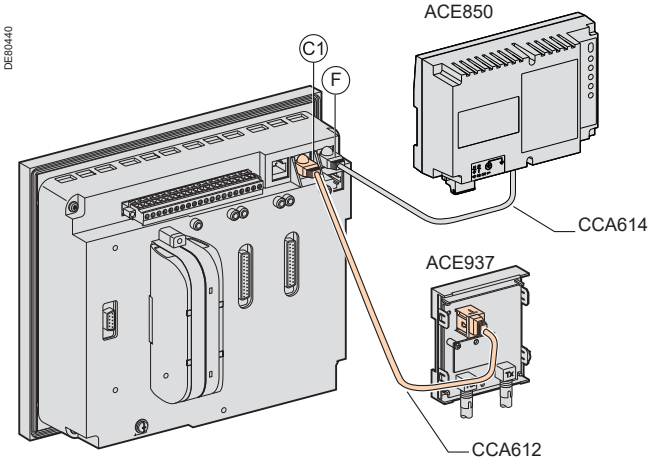

ACE949-2
2-wire RS 485 network interface

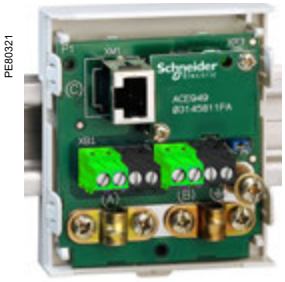

ACE949-2 2-wire RS 485 network connection interface.

Function

The ACE949-2 interface performs 2 functions:
■ Electrical interface between Sepam and a 2-wire RS 485 communication network
■ Main network cable branching box for the connection of a Sepam with a CCA612 cord.

Characteristics

ACE949-2 module	
Weight	0.1 kg (0.22 lb)
Assembly	On symmetrical DIN rail
Operating temperature	-25°C to +70°C (-13°F to +158°F)
Environmental characteristics	Same characteristics as Sepam base units
2-wire RS 485 electrical interface	
Standard	EIA 2-wire RS 485 differential
Distributed power supply	External, 12 V DC or 24 V DC ±10%
Power consumption	16 mA in receiving mode
	40 mA maximum in sending mode

Maximum length of 2-wire RS 485 network with standard cable

Number of Sepam units	Maximum length with 12 V DC power supply	Maximum length with 24 V DC power supply
5	320 m (1000 ft)	1000 m (3300 ft)
10	180 m (590 ft)	750 m (2500 ft)
20	160 m (520 ft)	450 m (1500 ft)
25	125 m (410 ft)	375 m (1200 ft)

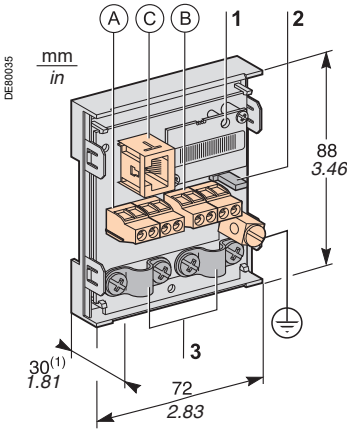

***(1)** 70 mm (2.8 in) with CCA612 cord connected.*

Description and dimensions

(A) and (B) Terminal blocks for network cable
(C) RJ45 socket to connect the interface to the base unit with a CCA612 cord
(t) Grounding/earthing terminal

1 Link activity LED, flashes when communication is active (sending or receiving in progress).
2 Jumper for RS 485 network line-end impedance matching with load resistor (Rc = 150 Ω), to be set to:
■ ~~Rc~~, if the module is not at one end of the network (default position)
■ Rc, if the module is at one end of the network.
3 Network cable clamps
(inner diameter of clamp = 6 mm or 0.24 in).

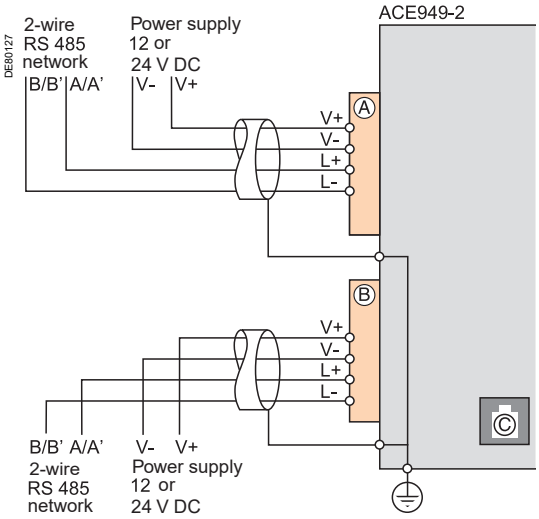

Connection

■ Connection of network cable to screw-type terminal blocks (A) and (B)
■ Connection of the earthing terminal by tinned copper braid with cross-section ⩾ 6 mm² (AWG 10) or cable with cross-section ⩾ 2.5 mm² (AWG 12) and length ⩽ 200 mm (7.9 in), fitted with a 4 mm (0.16 in) ring lug.
Check the tightness (maximum tightening torque 2.2 Nm or 19.5 lb-in).
■ The interfaces are fitted with clamps to hold the network cable and recover shielding at the incoming and outgoing points of the network cable:
□ the network cable must be stripped
□ the cable shielding braid must be around and in contact with the clamp
■ The interface is to be connected to connector (C) on the base unit using a CCA612 cord (length = 3 m or 9.8 ft, white fittings)
■ The interfaces are to be supplied with 12 V DC or 24 V DC.

ACE959
4-wire RS 485 network interface

ACE959 4-wire RS 485 network connection interface.

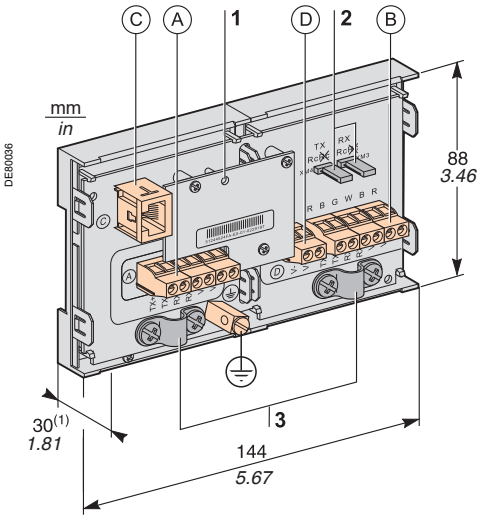

***(1)** 70 mm (2.8 in) with CCA612 cord connected.*

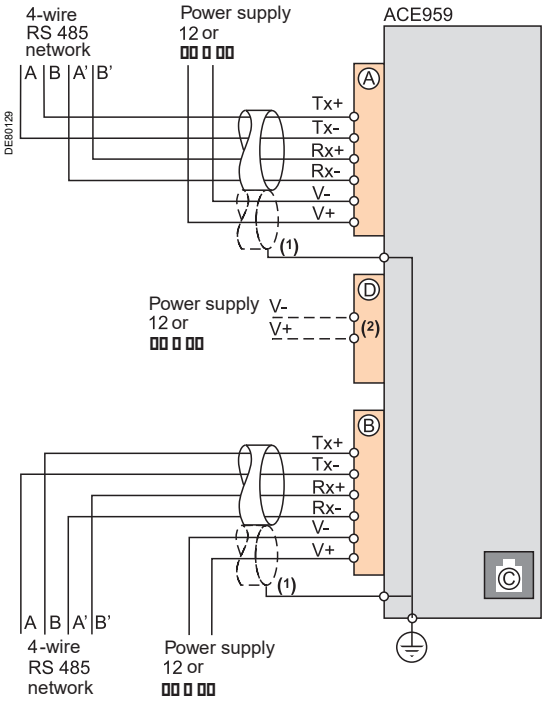

***(1)** Distributed power supply with separate wiring or included in the shielded cable (3 pairs).*
***(2)** Terminal block for connection of the distributed power supply module.*

Function

The ACE959 interface performs 2 functions:
- Electrical interface between Sepam and a 4-wire RS 485 communication network
- Main network cable branching box for the connection of a Sepam with a CCA612 cord.

Characteristics

ACE959 module	
Weight	0.2 kg (0.441 lb)
Assembly	On symmetrical DIN rail
Operating temperature	-25°C to +70°C (-13°F to +158°F)
Environmental characteristics	Same characteristics as Sepam base units

4-wire RS 485 electrical interface	
Standard	EIA 4-wire RS 485 differential
Distributed power supply	External, 12 V DC or 24 V DC ±10%
Power consumption	16 mA in receiving mode
	40 mA maximum in sending mode

Maximum length of 4-wire RS 485 network with standard cable

Number of Sepam units	Maximum length with 12 V DC power supply	Maximum length with 24 V DC power supply
5	320 m (1000 ft)	1000 m (3300 ft)
10	180 m (590 ft)	750 m (2500 ft)
20	160 m (520 ft)	450 m (1500 ft)
25	125 m (410 ft)	375 m (1200 ft)

Description and dimensions

(A) and (B) Terminal blocks for network cable
(C) RJ45 socket to connect the interface to the base unit with a CCA612 cord
(D) Terminal block for a separate auxiliary power supply (12 V DC or 24 V DC)
(t) Grounding/earthing terminal

1 Link activity LED, flashes when communication is active (sending or receiving in progress).
2 Jumper for 4-wire RS 485 network line-end impedance matching with load resistor (Rc = 150 Ω), to be set to:
- ~~Rc~~, if the module is not at one end of the network (default position)
- Rc, if the module is at one end of the network.

3 Network cable clamps
(inner diameter of clamp = 6 mm or 0.24 in).

Connection

- Connection of network cable to screw-type terminal blocks (A) and (B)
- Connection of the earthing terminal by tinned copper braid with cross-section ⩾ 6 mm² (AWG 10) or cable with cross-section ⩾ 2.5 mm² (AWG 12) and length ⩽ 200 mm (7.9 in), fitted with a 4 mm (0.16 in) ring lug.
Check the tightness (maximum tightening torque 2.2 Nm or 19.5 lb-in).
- The interfaces are fitted with clamps to hold the network cable and recover shielding at the incoming and outgoing points of the network cable:
  - the network cable must be stripped
  - the cable shielding braid must be around and in contact with the clamp
- The interface is to be connected to connector (C) on the base unit using a CCA612 cord (length = 3 m or 9.8 ft, white fittings)
- The interfaces are to be supplied with 12 V DC or 24 V DC
- The ACE959 can be connected to a separate distributed power supply (not included in shielded cable). Terminal block (D) is used to connect the distributed power supply module.

ACE937 fiber optic interface

PE50024

ACE937 fiber optic connection interface.

Function

The ACE937 interface is used to connect Sepam to a fiber optic communication star system.
This remote module is connected to the Sepam base unit by a CCA612 cord.

Characteristics

ACE937 module	
Weight	0.1 kg (0.22 lb)
Assembly	On symmetrical DIN rail
Power supply	Supplied by Sepam
Operating temperature	-25°C to +70°C (-13°F to +158°F)
Environmental characteristics	Same characteristics as Sepam base units

Fiber optic interface				
Fiber type		Graded-index multimode silica		
Wavelength		820 nm (invisible infra-red)		
Type of connector		ST (BFOC bayonet fiber optic connector)		
Fiber optic diameter (µm)	**Numerical aperture (NA)**	**Maximum attenuation (dBm/km)**	**Minimum optical power available (dBm)**	**Maximum fiber length**
50/125	0.2	2.7	5.6	700 m (2300 ft)
62.5/125	0.275	3.2	9.4	1800 m (5900 ft)
100/140	0.3	4	14.9	2800 m (9200 ft)
200 (HCS)	0.37	6	19.2	2600 m (8500 ft)

Maximum length calculated with:
- Minimum optical power available
- Maximum fiber attenuation
- Losses in 2 ST connectors: 0.6 dBm
- Optical power margin: 3 dBm (according to IEC 60870 standard).

Example for a 62.5/125 µm fiber
Lmax = (9.4 - 3 - 0.6)/3.2 = 1.8 km (1.12 mi)

⚠ CAUTION

HAZARD OF BLINDING
Never look directly into the end of the fiber optic.
Failure to follow these instructions can result in serious injury.

Description and dimensions

DE80037

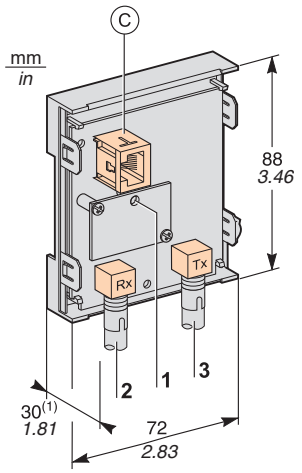

(1) *70 mm (2.8 in) with CCA612 cord connected.*

(C) RJ45 socket to connect the interface to the base unit with a CCA612 cord.

1 Link activity LED, flashes when communication is active (sending or receiving in progress).
2 Rx, female ST type connector (Sepam receiving).
3 Tx, female ST type connector (Sepam sending).

Connection

DE51666

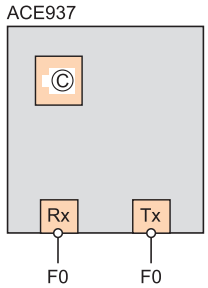

- The sending and receiving fiber optic fibers must be equipped with male ST type connectors
- Fiber optics screw-locked to Rx and Tx connectors.

The interface is to be connected to connector (C) on the base unit using a CCA612 cord (length = 3 m or 9.8 ft, white fittings).

ACE969TP-2 and ACE969FO-2 Multi-protocol interfaces

PB103454

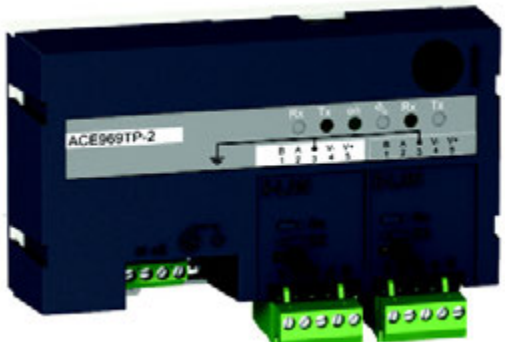

ACE969TP-2 communication interface.

PB103453

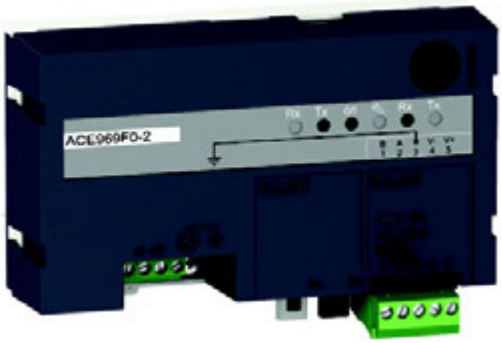

ACE969FO-2 communication interface.

Function

The ACE969 multi-protocol communication interfaces are for Sepam series 20, Sepam series 40, Easergy Sepam series 60 and Easergy Sepam series 80.
They have two communication ports to connect a Sepam to two independent communication networks:

■ The S-LAN (Supervisory Local Area Network) port is used to connect Sepam to a communication network dedicated to supervision, using one of the three following protocols:

□ IEC 60870-5-103
□ DNP3
□ Modbus RTU.

The communication protocol is selected at the time of Sepam parameter setting.

■ The E-LAN (Engineering Local Area Network) port, reserved for Sepam remote parameter setting and operation using the SFT2841 software.

There are two versions of the ACE969 interfaces, which are identical except for the S-LAN port:

■ ACE969TP-2 (Twisted Pair), for connection to an S-LAN network using a 2-wire RS 485 serial link

■ ACE969FO-2 (Fiber Optic), for connection to an S-LAN network using a fiber-optic connection (star or ring).

The E-LAN port is always a 2-wire RS 485 type port.

Compatible Sepam

The ACE969TP-2 and ACE969FO-2 multi-protocol interfaces are compatible with the following Sepam:

■ Sepam series 20 version ⩾ V0526
■ Sepam series 40 version ⩾ V3.00
■ Easergy Sepam series 60 all versions
■ Easergy Sepam series 80 base version and application version ⩾ V3.00

Characteristics

ACE969TP-2 and ACE969FO-2 module		
Technical characteristics		
Weight	0.285 kg (0.628 lb)	
Assembly	On symmetrical DIN rail	
Operating temperature	-25°C to +70°C (-13°F to +158°F)	
Environmental characteristics	Same characteristics as Sepam base units	
Power supply		
Voltage	24 to 250 V DC	110 to 240 V AC
Range	-20%/+10%	-20%/+10%
Maximum consumption	2 W	3 VA
Inrush current	< 10 A 100 µs	
Acceptable ripple content	12%	
Acceptable momentary outages	20 ms	
2-wire RS 485 communication ports		
Electrical interface		
Standard	EIA 2-wire RS 485 differential	
Distributed power supply	ACE969-2 not required (built-in)	
Fiber optic communication port		
Fiber optic interface		
Fiber type	Graded-index multimode silica	
Wavelength	820 nm (invisible infra-red)	
Type of connector	ST (BFOC bayonet fiber optic connector)	

Maximum length of fiber optic network

Fiber diameter (µm)	Numerical aperture (NA)	Attenuation (dBm/km)	Minimum optical power available (dBm)	Maximum fiber length
50/125	0.2	2.7	5.6	700 m (2300 ft)
62.5/125	0.275	3.2	9.4	1800 m (5900 ft)
100/140	0.3	4	14.9	2800 m (9200 ft)
200 (HCS)	0.37	6	19.2	2600 m (8500 ft)

Maximum length calculated with:
- Minimum optical power available
- Maximum fiber attenuation
- Losses in 2 ST connectors: 0.6 dBm
- Optical power margin: 3 dBm (according to IEC 60870 standard).

Example for a 62.5/125 µm fiber
Lmax = (9.4 - 3 - 0.6)/3.2 = 1.8 km (1.12 mi).

Dimensions

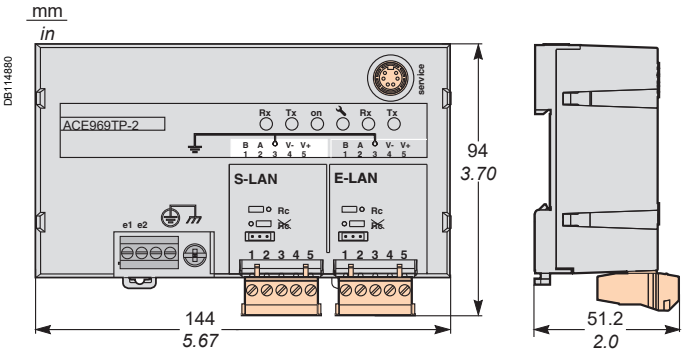

ACE969TP-2 and ACE969FO-2 Multi-protocol interfaces
Description

ACE969-2 communication interfaces

ACE969TP-2

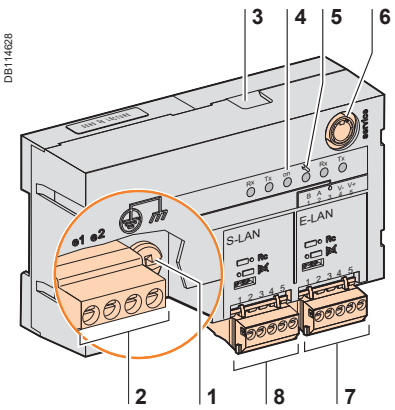

ACE969FO-2

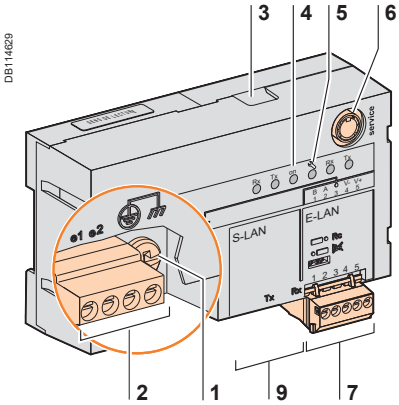

1 Grounding/earthing terminal using supplied braid
2 Power-supply terminal block
3 RJ45 socket to connect the interface to the base unit with a CCA612 cord
4 Green LED: ACE969-2 energized
5 Red LED: ACE969-2 interface status
   - LED off = ACE969-2 set up and communication operational
   - LED flashing = ACE969-2 not set up or setup incorrect
   - LED remains on = ACE969-2 has faulted
6 Service connector: reserved for software upgrades
7 E-LAN 2-wire RS 485 communication port (ACE969TP-2 and ACE969FO-2)
8 S-LAN 2-wire RS 485 communication port (ACE969TP-2)
9 S-LAN fiber-optic communication port (ACE969FO-2).

2-wire RS 485 communication ports

S-LAN port (ACE969TP-2)

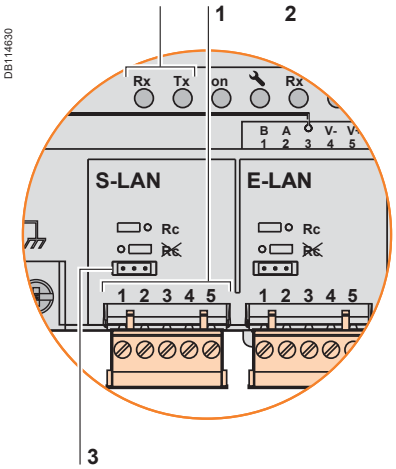

E-LAN port (ACE969TP-2 or ACE969FO-2)

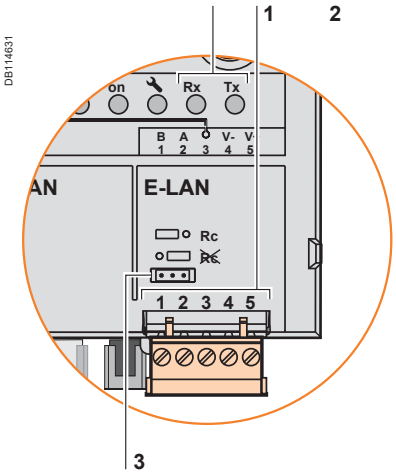

1 Draw-out terminal block, with two rows of connections to the RS 485 2-wire network:
   - 2 black terminals: connection of RS 485 twisted-pair (2 wires)
   - 2 green terminals: connection of twisted pair for distributed power supply
2 Indication LEDs:
   - flashing Tx LED: Sepam sending
   - flashing Rx LED: Sepam receiving
3 Jumper for RS 485 network line-end impedance matching with load resistor (Rc = 150 Ω), to be set to:
   - ~~Rc~~, if the interface is not at the line end (default position)
   - Rc, if the interface is at the line end.

Fiber optic communication port

S-LAN port (ACE969FO-2)

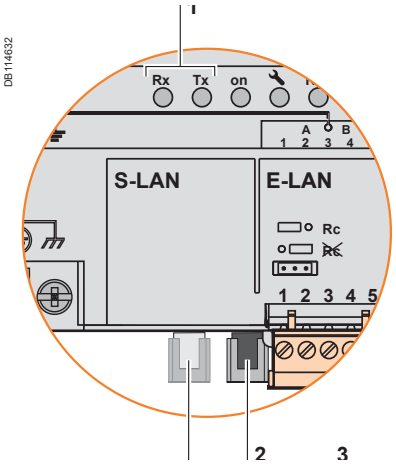

1 Indication LEDs:
   - flashing Tx LED: Sepam sending
   - flashing Rx LED: Sepam receiving
2 Rx, female ST-type connector (Sepam receiving)
3 Tx, female ST-type connector (Sepam sending).

ACE969TP-2 and ACE969FO-2 Multi-protocol interfaces
Connection

Power supply and Sepam

■ The ACE969-2 interface connects to connector C on the Sepam base unit using a CCA612 cord (length = 3 m or 9.84 ft, white RJ45 fittings)
■ The ACE969-2 interface must be supplied with 24 to 250 V DC or 110 to 240 V AC.

⚠ ⚠ DANGER

HAZARD OF ELECTRIC SHOCK, ELECTRIC ARC OR BURNS

■ Only qualified personnel should install this equipment. Such work should be performed only after reading this entire set of instructions and checking the technical characteristics of the device.
■ NEVER work alone.
■ Turn off all power supplying this equipment before working on or inside it. Consider all sources of power, including the possibility of backfeeding.
■ Always use a properly rated voltage sensing device to confirm that all power is off.
■ Start by connecting the device to the protective earth and to the functional earth.
■ Screw tight all terminals, even those not in use.

Failure to follow these instructions will result in death or serious injury.

DB114795

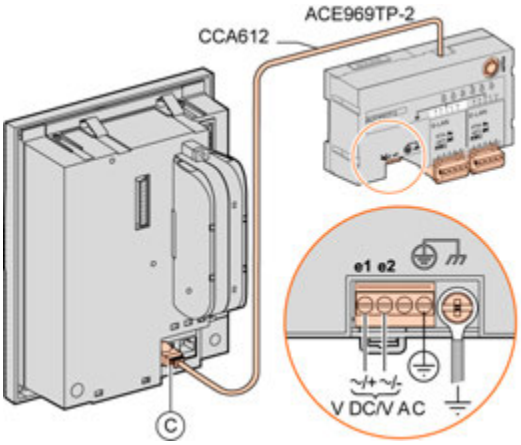

Terminals	Type	Wiring
e1-e2 - supply	Screw terminals	■ Wiring with no fittings: □ 1 wire with maximum cross-section 0.2 to 2.5 mm²(⩾ AWG 24-12) or 2 wires with maximum cross-section 0.2 to 1 mm²(⩾ AWG 24-18) □ stripped length: 8 to 10 mm (0.31 to 0.39 in) ■ Wiring with fittings: □ recommended wiring with Schneider Electric fitting: - DZ5CE015D for 1 wire 1.5 mm² (AWG 16) - DZ5CE025D for 1 wire 2.5 mm² (AWG 12) - AZ5DE010D for 2 wires 1 mm² (AWG 18) □ tube length: 8.2 mm (0.32 in) □ stripped length: 8 mm (0.31 in).
Protective earth	Screw terminal	1 green/yellow wire, max. length 3 m (9.8 ft) and max. cross-section 2.5 mm² (AWG 12)
Functional earth	4 mm (0.16 in) ring lug	Earthing braid, supplied for connection to cubicle grounding

DE51962 DE51845

6

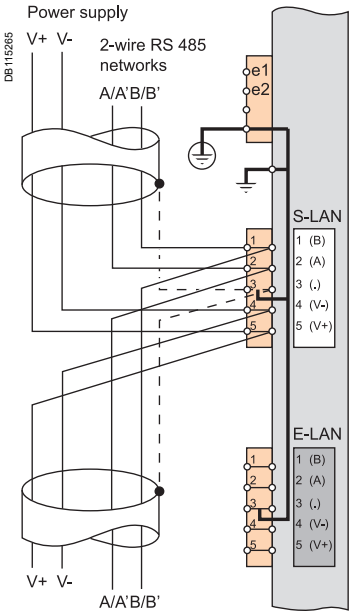

If ACE969TP and ACE969TP-2 are used together, the external power supply is required.

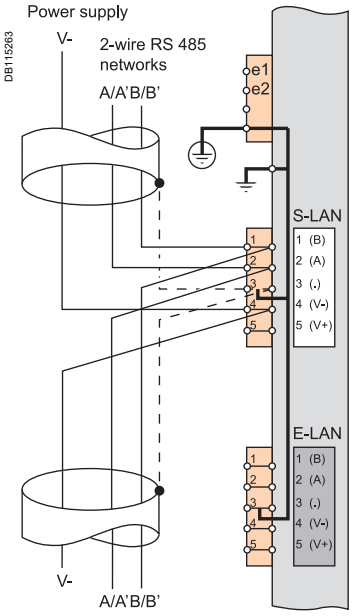

2-wire RS 485 communication ports (S-LAN or E-LAN)

- Connection of the RS 485 twisted pair (S-LAN or E-LAN) to terminals A and B
- In case of ACE 969TP wired with ACE969TP-2:
  - connection of twisted pair for distributed power supply to terminals 5 (V+) and 4 (V-)
- In case of ACE969TP-2 only:
  - connection only on the terminal 4 (V-) (ground continuity)
  - no need of external power supply
- The cable shields must be connected to the terminals marked 3 (.) on the connection terminal blocks.
- Terminal marked 3(.) are linked by an internal connection to the earthing terminals of the ACETP-2 interface (protective an functional earthing): Ie the shielding of the RS 485 cables is earthed as well.
- On the ACE960TP-2 interface, the cable clamps for the S-LAN and E-LAN RS 485 networks are earthed by the terminal 3.

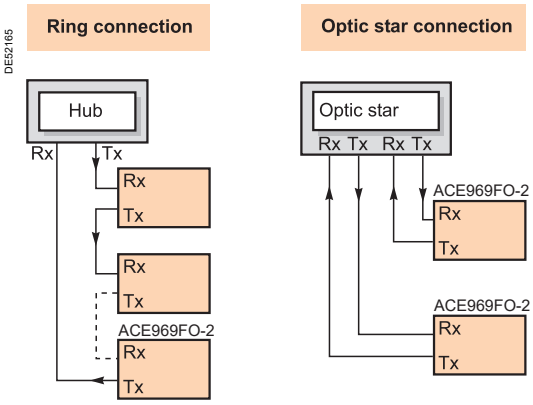

Fiber optic communication port (S-LAN)

⚠ CAUTION

HAZARD OF BLINDING
Never look directly into the fiber optic.

Failure to follow these instructions can result in serious injury.

The fiber optic connection can be made:
- point-to-point to an optic star system
- in a ring system (active echo).

The sending and receiving fiber optic fibers must be equipped with male ST type connectors.
The fiber optics are screw-locked to Rx and Tx connectors.

ACE909-2
RS 232/RS 485 converter

PE80317

ACE909-2 RS 232/RS 485 converter.

Function

The ACE909-2 converter is used to connect a master/central computer equipped with a V24/RS 232 type serial port as a standard feature to stations connected to a 2-wire RS 485 network.
Without requiring any flow control signals, after the parameters are set, the ACE909-2 converter performs conversion, network polarization and automatic dispatching of frames between the master and the stations by two-way simplex (half-duplex, single-pair) transmission.
The ACE909-2 converter also provides a 12 V DC or 24 V DC supply for the distributed power supply of the Sepam ACE949-2, ACE959 or ACE969-2 interfaces.
The communication settings should be the same as the Sepam and supervisor communication settings.

⚠ ⚠ DANGER

HAZARD OF ELECTRIC SHOCK, ELECTRIC ARC OR BURNS

- Only qualified personnel should install this equipment. Such work should be performed only after reading this entire set of instructions and checking the technical characteristics of the device.
- NEVER work alone.
- Turn off all power supplying this equipment before working on or inside it. Consider all sources of power, including the possibility of backfeeding.
- Always use a properly rated voltage sensing device to confirm that all power is off.
- Start by connecting the device to the protective earth and to the functional earth.
- Screw tight all terminals, even those not in use.

Failure to follow these instructions will result in death or serious injury.

Characteristics

Mechanical characteristics	
Weight	0.280 kg (0.617 lb)
Assembly	On symmetrical or asymmetrical DIN rail
Electrical characteristics	
Power supply	110 to 220 V AC ± 10%, 47 to 63 Hz
Galvanic isolation between ACE power supply and frame, and between ACE power supply and interface supply	2000 Vrms, 50 Hz, 1 min
Galvanic isolation between RS 232 and RS 485 interfaces	1000 Vrms, 50 Hz, 1 min
Protection by time-delayed fuse 5 mm x 20 mm (0.2 in x 0.79 in)	1 A rating
Communication and Sepam interface distributed supply	
Data format	11 bits: 1 start, 8 data, 1 parity, 1 stop
Transmission delay	< 100 ns
Distributed power supply for Sepam interfaces	12 V DC or 24 V CC, 250 mA max.
Maximum number of Sepam interfaces with distributed supply	12
Environmental characteristics	
Operating temperature	-5°C to +55°C (+23°F to +131°F)

Electromagnetic compatibility	IEC standard	Value
Fast transient bursts, 5 ns	60255-22-4	4 kV with capacitive coupling in common mode 2 kV with direct coupling in common mode 1 kV with direct coupling in differential mode
1 MHz damped oscillating wave	60255-22-1	1 kV common mode 0.5 kV differential mode
1.2/50 µs impulse waves	60255-5	3 kV common mode 1 kV differential mode

ACE909-2
RS 232/RS 485 converter

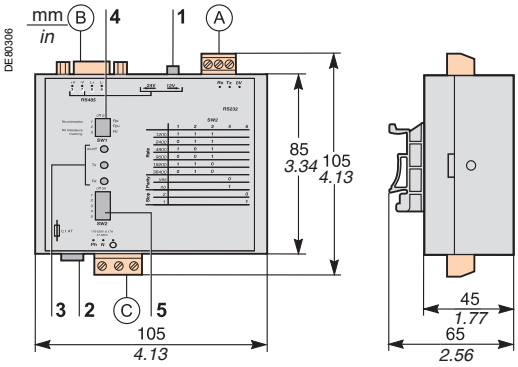

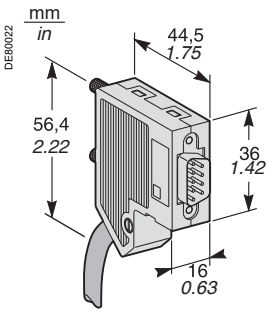

Male 9-pin sub-D connector supplied with the ACE909-2.

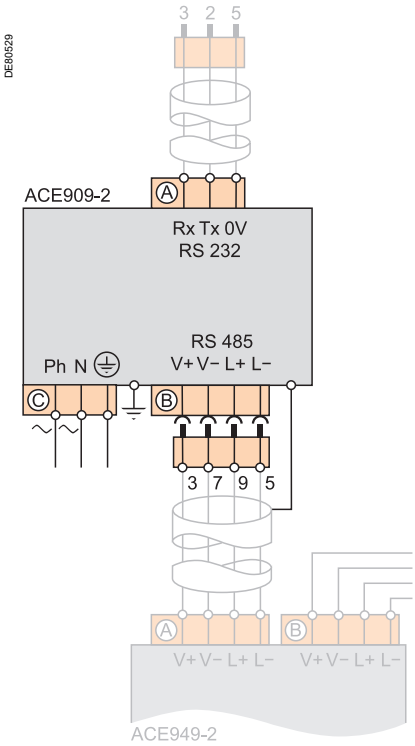

Description and dimensions

(A) Terminal block for RS 232 link limited to 10 m (33 ft).

(B) Female 9-pin sub-D connector to connect to the 2-wire RS 485 network, with distributed power supply.
1 screw-type male 9-pin sub-D connector is supplied with the converter.

(C) Power-supply terminal block

1 Distributed power supply voltage selector switch, 12 V DC or 24 V DC.
2 Protection fuse, unlocked by a 1/4 turn.
3 LEDs:
- ON/OFF: on if ACE909-2 is energized
- Tx: on if RS 232 sending by ACE909-2 is active
- Rx: on if RS 232 receiving by ACE909-2 is active.

4 SW1, parameter setting of 2-wire RS 485 network polarization and line impedance matching resistors.

Function	SW1/1	SW1/2	SW1/3
Polarization at 0 V via Rp -470 Ω	ON		
Polarization at 5 V via Rp +470 Ω		ON	
2-wire RS 485 network impedance matching by 150 Ω resistor			ON

5 SW2, parameter setting of asynchronous data transmission rate and format (same parameters as for RS 232 link and 2-wire RS 485 network).

Rate (bauds)	SW2/1	SW2/2	SW2/3		
1200	1	1	1		
2400	0	1	1		
4800	1	0	1		
9600	0	0	1		
19200	1	1	0		
38400	0	1	0		
Format				**SW2/4**	**SW2/5**
With parity check				0	
Without parity check				1	
1 stop bit (compulsory for Sepam)					1
2 stop bits					0

Converter configuration when delivered
- 12 V DC distributed power supply
- 11-bit format, with parity check
- 2-wire RS 485 network polarization and impedance matching resistors activated.

Connection

RS 232 link
- To 2.5 mm² (AWG 12) screw type terminal block (A)
- Maximum length 10 m (33 ft)
- Rx/Tx: RS 232 receiving/sending by ACE909-2
- 0V: Rx/Tx common, do not earth.

2-wire RS 485 link with distributed power supply
- To connector (B) female 9-pin sub-D
- 2-wire RS 485 signals: L+, L-
- Distributed power supply: V+ = 12 V DC or 24 V DC, V- = 0 V.

Power supply
- To 2.5 mm² (AWG 12) screw type terminal block (C)
- Reversible phase and neutral
- Earthed via terminal block and metal case (ring lug on back of case).

ACE919CA and ACE919CC RS 485/RS 485 converters

PE80316

ACE919CC RS 485/RS 485 converter.

Function

The ACE919 converters are used to connect a master/central computer equipped with an RS 485 type serial port as a standard feature to stations connected to a 2-wire RS 485 network.
Without requiring any flow control signals, the ACE919 converters perform network polarization and impedance matching.
The ACE919 converters also provide a 12 V DC or 24 V DC supply for the distributed power supply of the Sepam ACE949-2, ACE959 or ACE969-2 interfaces.
There are 2 types of ACE919 converter:
- ACE919CC, DC-powered
- ACE919CA, AC-powered.

⚠ ⚠ DANGER

HAZARD OF ELECTRIC SHOCK, ELECTRIC ARC OR BURNS
- Only qualified personnel should install this equipment. Such work should be performed only after reading this entire set of instructions and checking the technical characteristics of the device.
- NEVER work alone.
- Turn off all power supplying this equipment before working on or inside it. Consider all sources of power, including the possibility of backfeeding.
- Always use a properly rated voltage sensing device to confirm that all power is off.
- Start by connecting the device to the protective earth and to the functional earth.
- Screw tight all terminals, even those not in use.

Failure to follow these instructions will result in death or serious injury.

Characteristics

Mechanical characteristics		
Weight	0.280 kg (0.617 lb)	
Assembly	On symmetrical or asymmetrical DIN rail	
Electrical characteristics	**ACE919CA**	**ACE919CC**
Power supply	110 to 220 V AC ±10%, 47 to 63 Hz	24 to 48 V DC ±20%
Protection by time-delayed fuse 5 mm x 20 mm (0.2 in x 0.79 in)	1 A rating	1 A rating
Galvanic isolation between ACE power supply and frame, and between ACE power supply and interface supply		2000 Vrms, 50 Hz, 1 min
Communication and Sepam interface distributed supply		
Data format	11 bits: 1 start, 8 data, 1 parity, 1 stop	
Transmission delay	< 100 ns	
Distributed power supply for Sepam interfaces	12 V DC or 24 V CC, 250 mA max.	
Maximum number of Sepam interfaces with distributed supply	12	
Environmental characteristics		
Operating temperature	-5°C to +55°C (+23°F to +131°F)	
Electromagnetic compatibility	**IEC standard**	**Value**
Fast transient bursts, 5 ns	60255-22-4	4 kV with capacitive coupling in common mode 2 kV with direct coupling in common mode 1 kV with direct coupling in differential mode
1 MHz damped oscillating wave	60255-22-1	1 kV common mode 0.5 kV differential mode
1.2/50 µs impulse waves	60255-5	3 kV common mode 1 kV differential mode

ACE919CA and ACE919CC RS 485/RS 485 converters

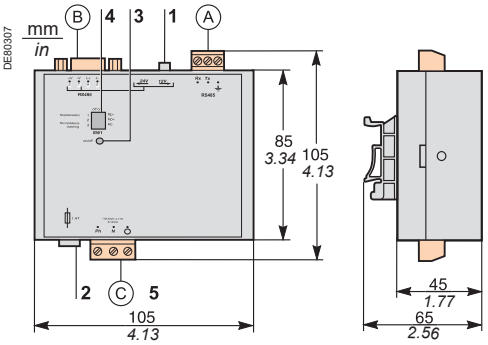

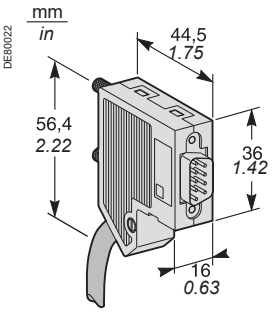

Male 9-pin sub-D connector supplied with the ACE919.

Description and dimensions

(A) Terminal block for 2-wire RS 485 link without distributed power supply.

(B) Female 9-pin sub-D connector to connect to the 2-wire RS 485 network, with distributed power supply.
1 screw-type male 9-pin sub-D connector is supplied with the converter.

(C) Power supply terminal block.

1 Distributed power supply voltage selector switch, 12 V DC or 24 V DC.
2 Protection fuse, unlocked by a 1/4 turn.
3 ON/OFF LED: on if ACE919 is energized.
4 SW1, parameter setting of 2-wire RS 485 network polarization and line impedance matching resistors.

Function	SW1/1	SW1/2	SW1/3
Polarization at 0 V via Rp -470 Ω	ON		
Polarization at 5 V via Rp +470 Ω		ON	
2-wire RS 485 network impedance matching by 150 Ω resistor			ON

Converter configuration when delivered
- 12 V DC distributed power supply
- 2-wire RS 485 network polarization and impedance matching resistors activated.

Connection

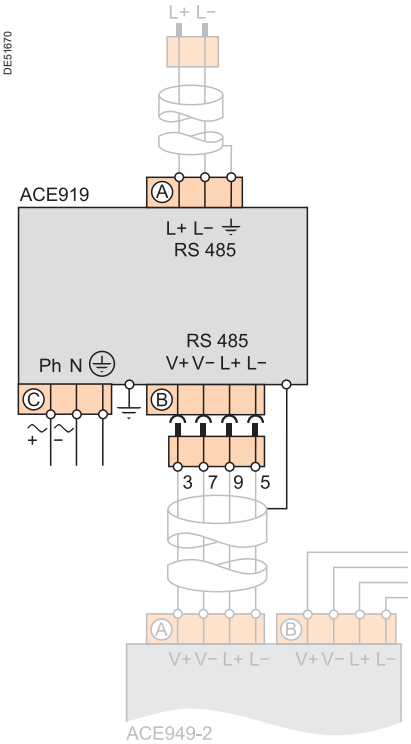

2-wire RS 485 link without distributed power supply
- To 2.5 mm² (AWG 12) screw type terminal block (A)
- L+, L-: 2-wire RS 485 signals
- ⏚ Shielding.

2-wire RS 485 link with distributed power supply
- To connector (B) female 9-pin sub-D
- 2-wire RS 485 signals: L+, L-
- Distributed power supply: V+ = 12 V DC or 24 V DC, V- = 0 V.

Power supply
- To 2.5 mm² (AWG 12) screw type terminal block (C)
- Reversible phase and neutral (ACE919CA)
- Earthed via terminal block and metal case (ring lug on back of case).

ECI850
IEC 61850 Sepam server

PE80319

ECI850: IEC 61850 Sepam server.

Note: *This module is inoperative from 30 June 2017. You can use the ACE850 communication interface on Sepam series 40, Easergy Sepam series 60 and series 80.*

Function

The ECI850 can be used to connect Sepam series 20, Sepam series 40, Easergy Sepam series 60 and series 80 to an Ethernet network using the IEC 61850 protocol.
The ECI850 creates the interface between the Ethernet/IEC 61850 network and a Sepam RS 485/Modbus network.
A PRI surge arrester (ref. 16339) is supplied with the ECI850 to protect its power supply.

Compatible Sepam

The ECI850 servers are compatible with the following Sepam:
- Sepam series 20 version ⩾ V0526
- Sepam series 40 version ⩾ V3.00
- Easergy Sepam series 60 all versions
- Easergy Sepam series 80 base version and application version ⩾ V3.00.

Characteristics

ECI850 module	
Technical characteristics	
Weight	0.17 kg (0.37 lb)
Assembly	On symmetrical DIN rail
Power supply	
Voltage	24 V DC (± 10%) supplied by a class 2 power supply
Maximum consumption	4 W
Dielectric withstand	1.5 kV
Environmental characteristics	
Operating temperature	-25 °C to +70 °C (-13 °F to +158 °F)
Storage temperature	-40 °C to +85 °C (- 40 °F to +185 °F)
Humidity ratio	5 to 95% relative humidity (non condensing) at +55 °C (131 °F)
Degree of pollution	Class 2
Tightness	IP30
Electromagnetic compatibility	
Emission tests	
Emissions (radiated and conducted)	EN 55022/EN 55011/FCC Class A
Immunity tests - Radiated disturbances	
Electrostatic discharge	EN 61000-4-2
Radiated radiofrequencies	EN 61000-4-3
Magnetic fields at the network frequency	EN 61000-4-8
Immunity tests - Conducted disturbances	
Fast transient bursts	EN 61000-4-4
Surges	EN 61000-4-5
Conducted radiofrequencies	EN 61000-4-6
Safety	
International	IEC 60950
USA	UL 508/UL 60950
Canada	cUL (complies with CSA C22.2, no. 60950)
Australia/New Zealand	AS/NZS 60950
Certification	
Europe	CE
2-wire/4-wire RS 485 communication port	
Electrical interface	
Standard	2-wire or 4-wire differential RS 485 EIA
Max. number of Sepam units per ECI850	2 Easergy Sepam series 80 or 2 Easergy Sepam series 60 or 3 Sepam series 40 or 5 Sepam series 20
Maximum network length	1000 m (3300 ft)
Ethernet communication port	
Number of ports	1
Type of port	10/100 Base Tx
Protocols	HTTP, FTP, SNMP, SNTP, ARP, SFT, IEC 61850 TCP/IP
Transmission speed	10/100 Mbps

ECI850
IEC 61850 Sepam server

Characteristics (cont'd)

PRI surge arrester	
Electrical characteristics	
Nominal operating voltage	48 V DC
Maximum discharge current	10 kA (8/20 µs wave)
Nominal discharge current	5 kA (8/20 µs wave)
Protection level	70 V
Response time	1 ns
Connection	
With cage terminals	Cables with cross-section 2.5 to 4 mm^2 (AWG 12-10)

Description

PE80063

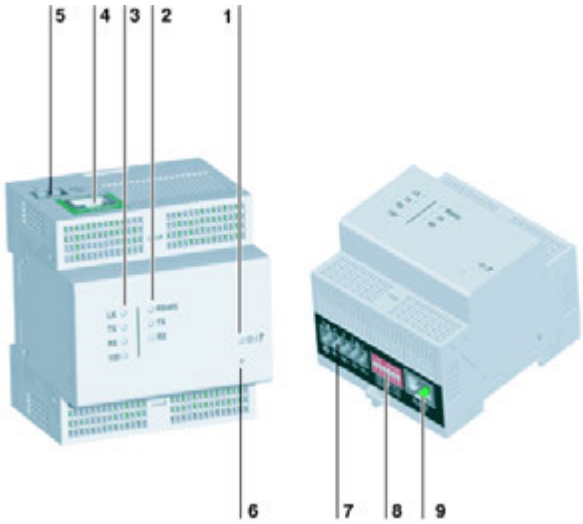

1 ⓘ/🔧 LED: power-up/maintenance
2 Standard LEDs:
- ■ RS 485 LED: network link active
- □ On: RS 485 mode
- □ Off: RS 232 mode
- ■ Flashing green Tx LED: ECI850 transmission active
- ■ Flashing green Rx LED: ECI850 reception active

3 Ethernet LEDs:
- ■ LK green LED on: network link active
- ■ Flashing green Tx LED: ECI850 transmission active
- ■ Flashing green Rx LED: ECI850 reception active
- ■ 100 green LED:
- □ On: 100 Mbps network speed
- □ Off: 10 Mbps network speed

4 10/100 Base Tx port for Ethernet connection by RJ45 connector
5 Connection of the 24 V DC supply
6 Reset button
7 RS 485 connection
8 RS 485 parameter-setting selector switches
9 RS 232 connection

DE80262

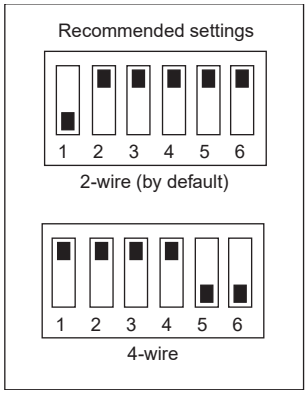

Setting the RS 485 network parameters.

Setting the RS 485 network parameters

The network polarization and line impedance matching resistors and type of 2-wire/4-wire RS 485 network are selected by means of the RS 485 parameter-setting selector switches. These selector switches are configured by default for a 2-wire RS 485 network with network polarization and line impedance matching resistors.

Network line impedance matching with resistor	SW1	SW2	SW3	SW4	SW5	SW6
2-wire RS 485	OFF	ON				
4-wire RS 485	ON	ON				

Network polarization	SW1	SW2	SW3	SW4	SW5	SW6
at the 0 V			ON			
at the 5 V				ON		

Selecting the RS 485 network	SW1	SW2	SW3	SW4	SW5	SW6
2-wire network					ON	ON
4-wire network					OFF	OFF

Setting the Ethernet link parameters

The TCSEAK0100 configuration kit can be used to connect a PC to the ECI850 to set the Ethernet link parameters.

ECI850
IEC 61850 Sepam server

Dimensions

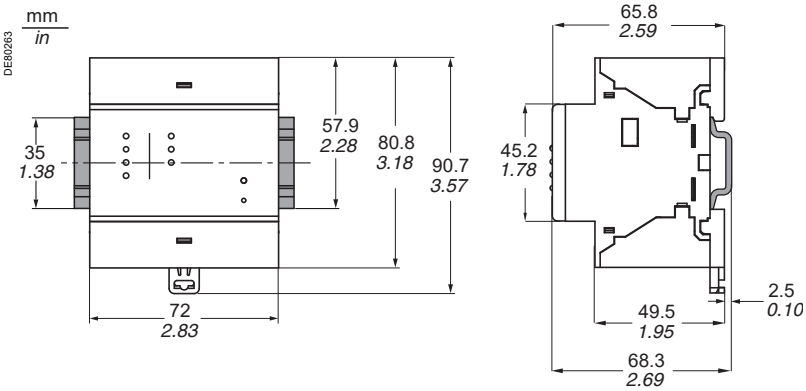

NOTICE

RISK OF DESTRUCTION OF THE ECI850

■ Connect the PRI surge arrester in accordance with the wiring diagrams below.

■ Check the quality of the earth connected to the surge arrester.

Failure to follow these instructions can result in equipment damage.

Connection

■ Connect the power supply and RS 485 twisted pair using cable with cross-section ⩽ 2.5 mm² (⩾AWG 12)

■ Connect the 24 V DC power supply and the earth to inputs (1), (5) and (3) of the PRI surge arrester (ref. 16339) supplied with the ECI850

■ Connect outputs (2), (8) and (6), (12) of the PRI surge arrester to the - and + terminals of the black screen terminal block

■ Connect the RS 485 twisted pair (2-wire or 4-wire) to the (RX+ RX- or RX+ RX- TX+ TX-) terminals of the black screw terminal block

■ Connect the RS 485 twisted pair shielding to the ⊖ terminal of the black screw terminal block

■ Connect the Ethernet cable to the green RJ45 connector

2-wire RS 485 network

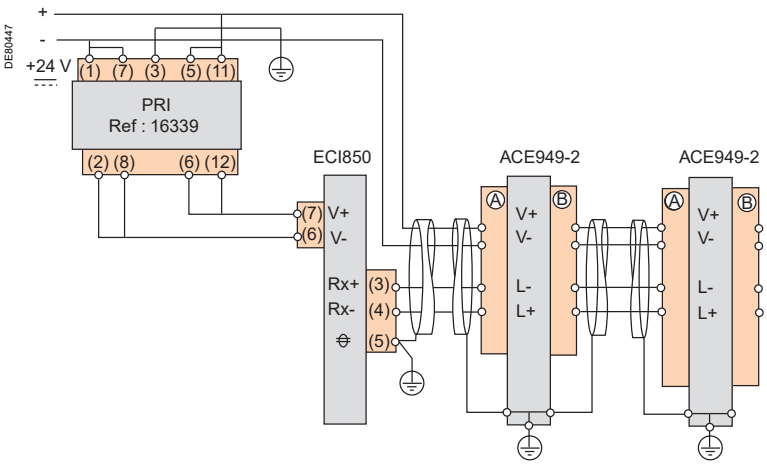

4-wire RS 485 network

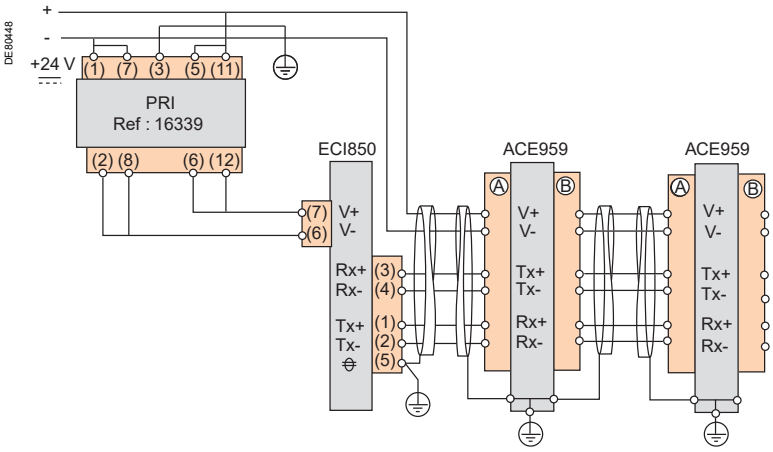

Example of architecture

The diagram below shows an example of the communication architecture with ECI850 IEC 61850 Sepam servers.

Note: *Rc, line impedance matching resistor*

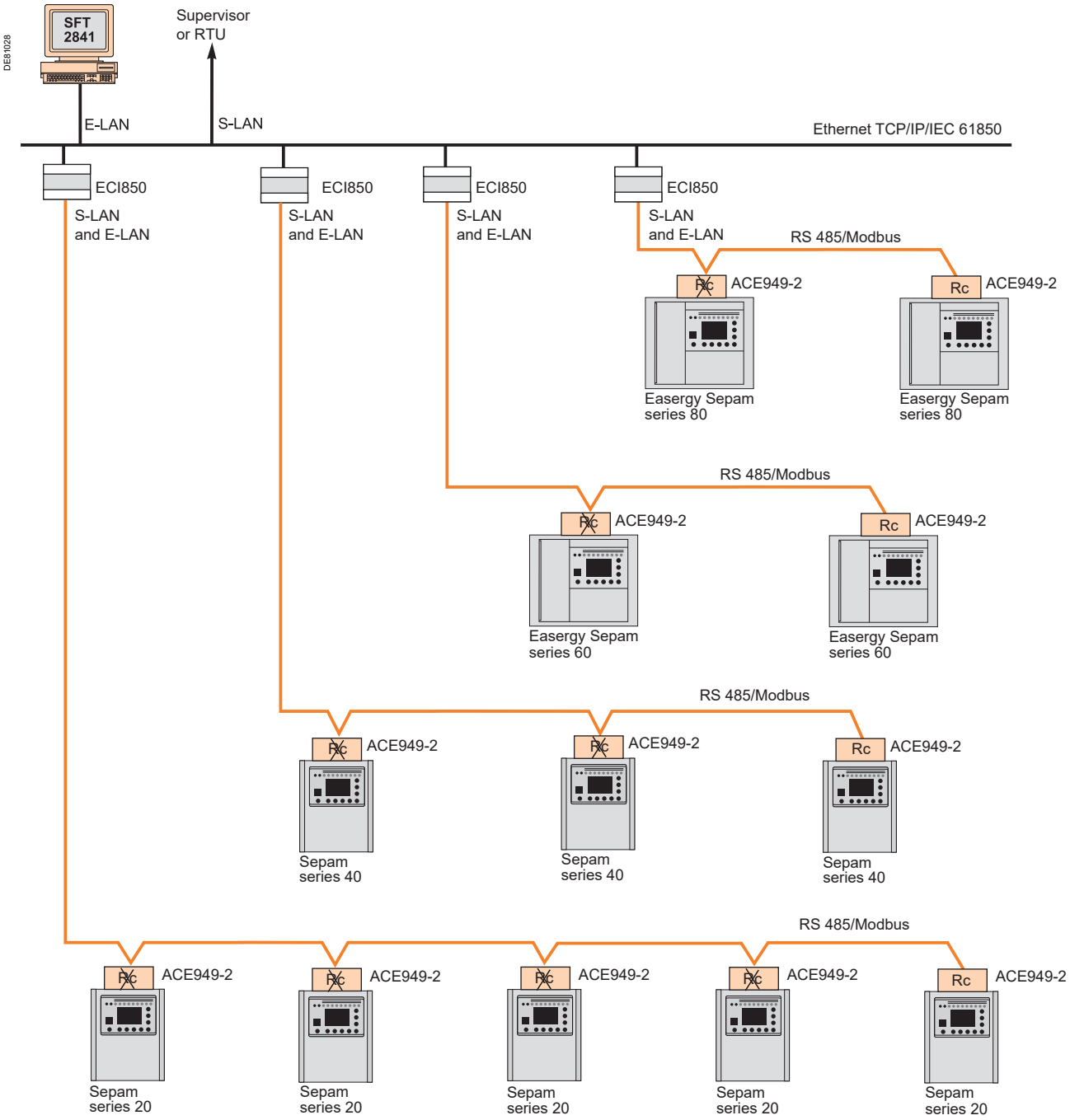

Maximum Advised Configuration

The maximum configuration of Sepam for an ECI850 IEC 61850 Sepam server of level 1 is to be choosen between the following configurations:

- 5 Sepam series 20,
- 3 Sepam series 40,
- 2 Easergy Sepam series 60,
- 2 Easergy Sepam series 80.

Contents

User Machine Interfaces **196**

SFT2841 setting and operating software **197**
Welcome window 197
Presentation 198
General screen organization 199
Use of the software 200
Configuration of a Sepam network 201

UMI on front panel **206**
Presentation 206

Advanced UMI **207**
Access to data 207
White keys for current operation 208
Blue keys for parameter and protection setting 210
Data entry principles 212

Default parameter setting **213**

Commissioning: principles and method **215**

Testing and metering equipment required **216**

General examination and preliminary actions **217**

Checking parameter and protection settings **218**

Checking phase current input connections **219**
1 A/5 A current transformers 219
LPCT type current sensors 220

Checking the residual current input connection **221**

Checking phase voltage input connections **222**

Checking the residual voltage input connection **223**

Checking logic input and output connections **224**

Validation of the complete protection chain **225**

Checking optional module connections **226**

Test sheet **227**

Maintenance **228**

Firmware modifications **230**

User Machine Interfaces

Sepam User Machine Interfaces

Two different levels of user machine interface (UMI) are offered on the front panel of Sepam:

■ Basic UMI, with LEDs, for installations operated via a remote system with no need for local operation

■ Advanced UMI, with keypad and graphic LCD display, giving access to all the information necessary for local operation and Sepam parameter setting.

SFT2841 setting and operating software

The UMI on the front panel of Sepam can be completed by the SFT2841 PC software tool, which can be used for all Sepam parameter setting, local operation and customization functions.

The SFT2841 setting and operating software is supplied on CD-ROM, along with the SFT2826 program for recovering disturbance recording files, the interactive introduction to the Sepam range, and all the Sepam documentation in PDF format.

The CCA783 or CCA784 PC connecting cord, to be ordered separately, connects the PC to the port on the Sepam front panel, so that the SFT2841 package can be used in point-to-point connected mode.

PE80320

SFT2841 setting and operating software
Welcome window

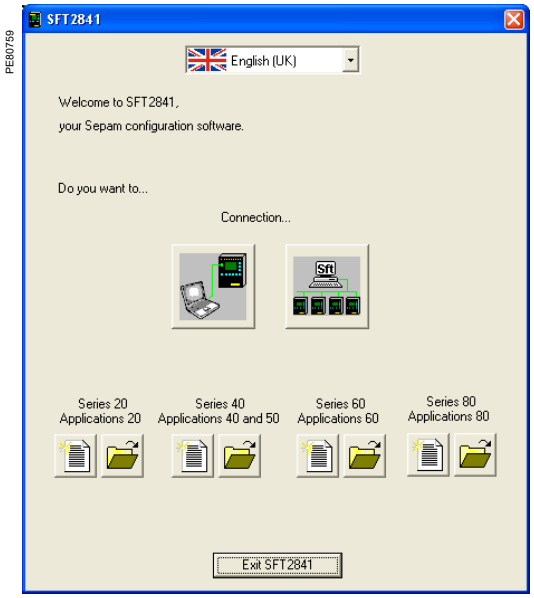

Welcome window.

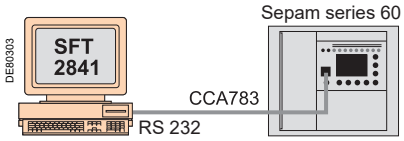

SFT2841 connected to a single Sepam unit with the serial port.

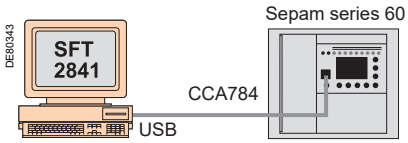

SFT2841 connected to a single Sepam unit with the USB port.

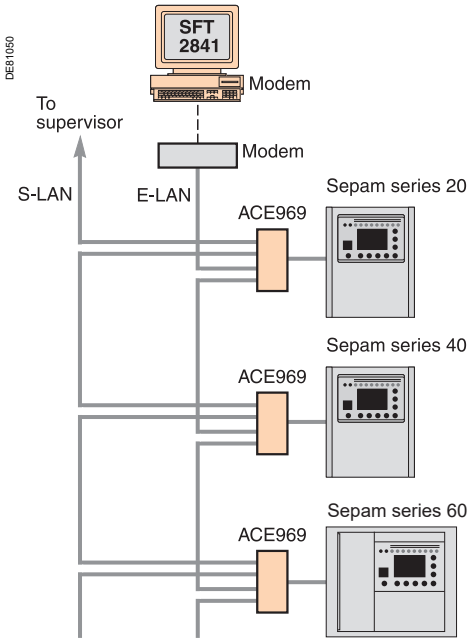

SFT2841 connected to a Sepam network.

Description

The SFT2841 welcome window opens when the program is launched.
It lets you choose the language for the SFT2841 screens, and provides access to the Sepam parameter and protection setting files:
- In disconnected mode, you can open or create a parameter and protection setting file for a Sepam
- When connected to a single Sepam unit, you can access the parameter and protection setting file for the Sepam unit connected to the PC
- When connected to a Sepam network, you can access the parameter and protection setting files for a group of Sepam units connected to the PC via a communication network.

Language of SFT2841 screens

SFT2841 software can be used in English, French or Spanish. The language is selected at the top of the window.

Using SFT2841 in disconnected mode

Disconnected mode allows you to prepare parameters and settings files for Sepam prior to commissioning.
The parameter and protection setting files prepared in disconnected mode will be downloaded later to the Sepam units in connected mode.
- To create a new parameter and protection setting file, click on the icon for the relevant Sepam family
- To open an existing parameter and protection setting file, click on the icon for the relevant Sepam family.

Using SFT2841 connected to a single Sepam unit

Connected to a single Sepam unit mode is used during commissioning:
- To upload, download and modify Sepam parameters and settings
- To have all the measurements and supporting data available for commissioning.

The PC fitted with the SFT2841 software is connected to the port on the front panel of the Sepam via an RS 232 port using the CCA783 cord.
Connection to a USB port is possible using the CCA784 cable.
To open the parameter and setting file on the Sepam once it is connected to the PC, click on the icon.

Using SFT2841 connected to a Sepam network

Connected to a Sepam network mode is used during operation:
- To manage the protection system
- To check the status of the power supply
- To diagnose any incident occurring on the power supply.

The PC fitted with the SFT2841 software is connected to a group of Sepam units via a communication network (connection via serial link, telephone line or Ethernet). This network forms the E-LAN engineering network.

The connection window allows configuration of the Sepam network, and provides access to the parameter and protection setting files of the Sepam units on the network.

To open the connection window, click on the icon.

See “Configuration of a Sepam network” page 201 for details of how to configure the E-LAN engineering network from the connection window.

SFT2841 setting and operating software
Presentation

All the setting and operating functions are available on the screen of a PC equipped with the SFT2841 software tool and connected to the PC connection port on the front panel of Sepam (run in a Windows XP or Vista environment).
All the data used for the same task are grouped together in the same screen to facilitate operation.
Menus and icons are used for fast, direct access to the required information.

Current operation
- Display of all metering and operation data
- Display of alarm messages with the time of appearance (date, hour, min, s)
- Display of diagnosic data such as: tripping current, number of switchgear operations and cumulative breaking current
- Display of all the protection and parameter settings
- Display of the logic status of inputs, outputs and LEDs.

This software is suitable for occasional local operation, meeting the needs of demanding personnel who require fast access to all the information.

Parameter and protection setting (1)
- Display and setting of all the parameters of each protection function in the same page
- Program logic parameter setting, parameter setting of general installation and Sepam data
- Input data can be prepared ahead of time and transferred into the corresponding Sepam units in a single operation (downloading function).

Main functions performed by SFT2841:
- Modification of passwords
- Entry of general characteristics (ratings, integration period, etc.)
- Setting Sepam date and time
- Entry of protection settings
- Changing of program logic assignments
- Enabling/disabling of functions
- Saving of files.

Saving
- Protection and parameter setting data can be saved
- Printing of reports is possible as well.

This software can also be used to recover disturbance recording files and provide graphic display using the SFT2826 software tool.

Operating assistance
Access from all the screens to a help section which contains all the technical data required for Sepam installation and use.

(1) Modes accessed via 2 passwords (protection setting level, parameter setting level).

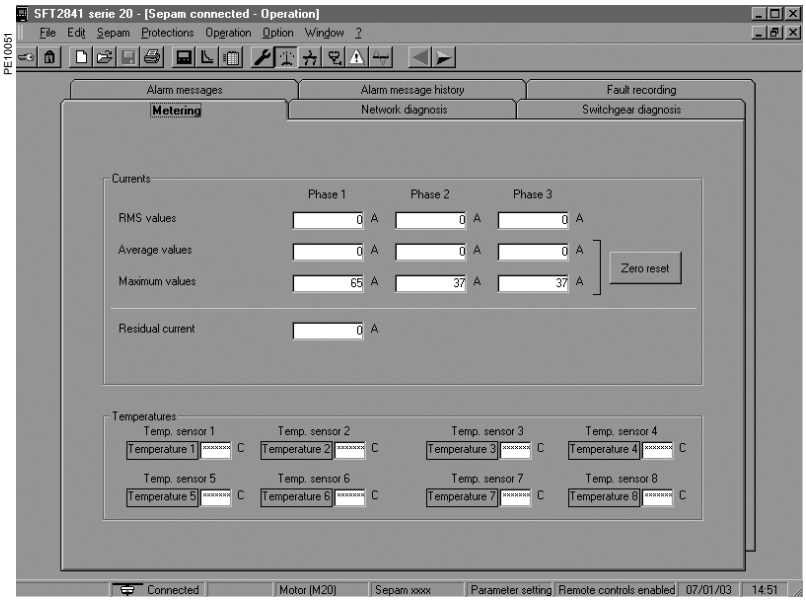

Example of a measurement display screen (Sepam M20).

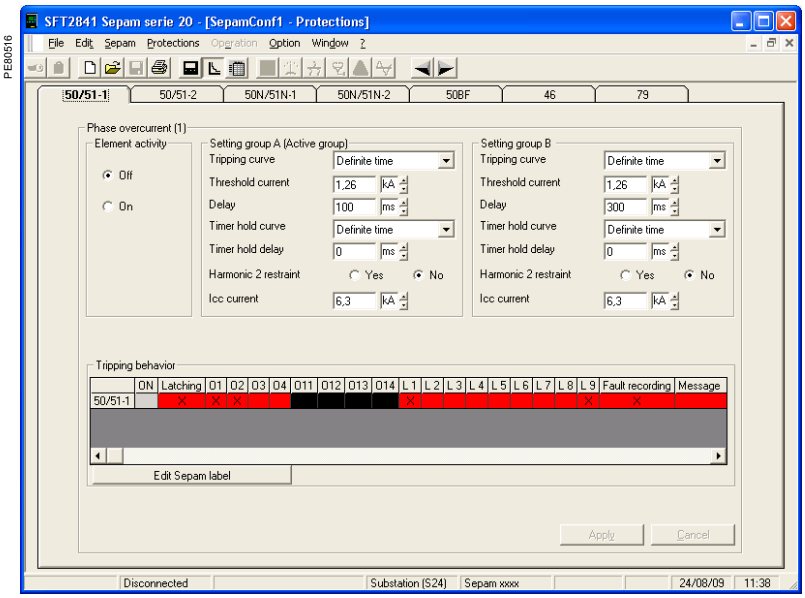

Example of a phase overcurrent protection setting screen.

SFT2841 setting and operating software
General screen organization

A Sepam document is displayed on the screen via a graphic interface that has conventional Windows features.
All the SFT2841 software screens are set up in the same way.
They include:
■ Ⓐ: title bar, with:
□ name of the application (SFT2841)
□ identification of the Sepam document displayed
□ window manipulation handles
■ Ⓑ: menu bar, to access all the SFT2841 software functions (unavailable functions are dimmed)
■ Ⓒ: toolbar, a group of contextual icons for quick access to the main functions (also accessed via the menu bar)
■ Ⓓ: work zone available to the user, presented in the form of tab boxes
■ Ⓔ: status bar, with the following information relating to the active document:
□ alarm on
□ identification of the connection window
□ SFT2841 operating mode, connected or disconnected
□ type of Sepam
□ Sepam editing identification
□ identification level
□ Sepam operating mode
□ PC date and time.

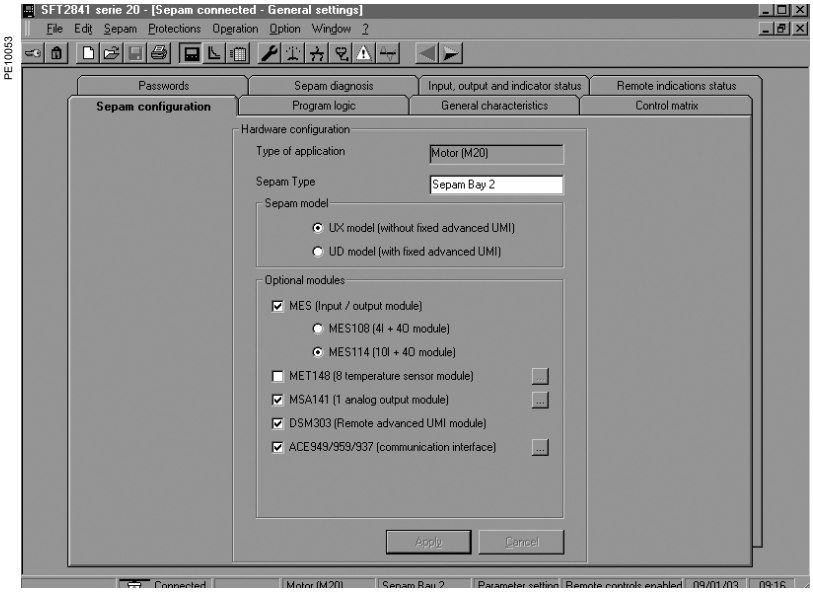

Example of Sepam configuration screen.

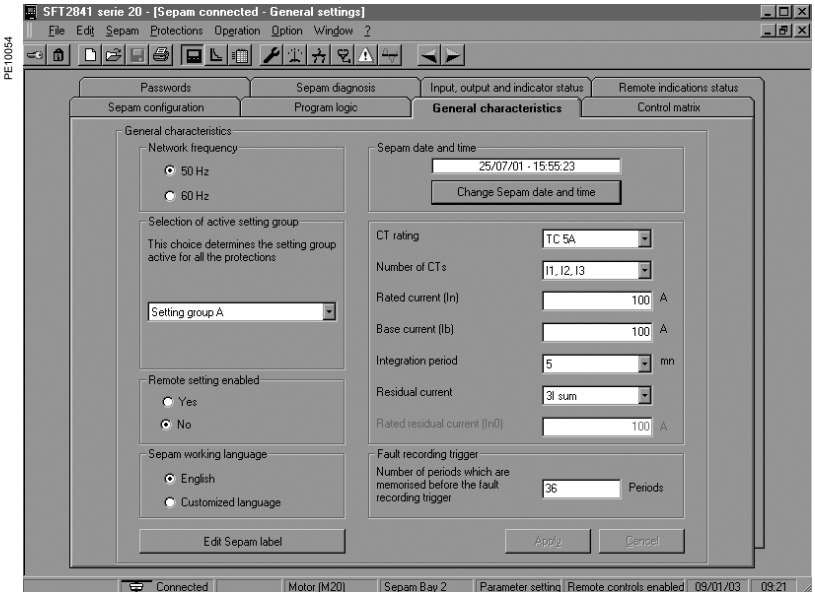

Example of general characteristics screen.

Guided navigation
A guided navigation mode is proposed to make it easier to enter all the Sepam parameter and protection settings. It allows users to go through all the data input screens in the natural order.
The sequencing of screens in guided mode is controlled by clicking on 2 icons on the toolbar Ⓒ:
■ ◀: To go back to the previous screen
■ ▶: To go to the next screen

The screens are linked up in the following order:
1. Sepam configuration
2. Program logic
3. General characteristics
4. Setting screens for the protection functions available, according to the type of Sepam
5. Control matrix.

On-line help
The operator can refer to the on-line help at any time via the "?" command in the menu bar.
To use the on-line help, a browser such as Netscape Navigator or Internet Explorer MS is required.

Not connected to Sepam mode

Sepam parameter and protection setting

The parameter and protection setting of a Sepam using SFT2841 consists of preparing the Sepam file containing all the characteristics that are specific to the application, a file that is then downloaded into Sepam at the time of commissioning.

NOTICE

HAZARD OF UNINTENDED OPERATION

■ The device must only be configured and set by qualified personnel, using the results of the installation protection system study.

■ During commissioning of the installation and after any modification, check that the Sepam configuration and protection function settings are consistent with the results of this study.

Failure to follow these instructions can result in equipment damage.

Operating mode:
1. Create a Sepam file for the type of Sepam to be set up. (The newly created file contains the Sepam factory-set parameter and protection settings).
2. Modify the "Sepam" page function sheet parameters and the "Protections" page function sheet protection settings:
■ All the information relating to a function is grouped together on a single screen
■ We recommend entering all the parameter and protection settings in the natural screen order suggested by the guided navigation tool.

Entry of parameter and protection settings
■ The parameter and protection setting input fields correspond to the type of value:
□ selection buttons
□ numerical value input fields
□ dialog box (Combo box)
■ The modifications made to a function sheet are to be "Applied" or "Canceled" before the user goes on to the following function sheet
■ The consistency of the parameter and protection settings entered is checked:
□ a clear message specifies the inconsistent value in the function sheet opened
□ values which become inconsistent following the modification of a parameter are replaced by "****" and must be corrected.

Connected to Sepam mode

Precaution

When a laptop is used, given the risks inherent in the accumulation of static electricity, the customary precaution consists of discharging in contact with an earthed metal frame before physically connecting the CCA783 cord.

Note: *If you are unable to connect to Sepam, check that the SFT2841 software version used is actually compatible with your Sepam.*
(see "Compatibility of Sepam version/SFT2841 version" page 229).

Plugging into Sepam

■ Plug the 9-pin connector (SUB-D type) into one of the PC communication ports. Configure the PC communication port via the "Communication port" function in the "Options" menu.
■ Plug the 6-pin connector (round minidin type) into the connector situated behind the blanking plate on the front panel of Sepam or the DSM303 module.

Connection to Sepam

2 possibilities for setting up the connection between SFT2841 and the Sepam:
■ Choice of "Connect to the Sepam" at the start-up of SFT2841
■ "Connection" function in the "File" menu.
Once the connection with Sepam has been established, "Connected" appears in the status bar, and the Sepam connection window can be accessed in the work zone.

User identification

The window intended for the entry of the 4-digit password is activated:
■ Via the "Passwords" tab
■ Via the "Identification" function in the "Sepam" menu
■ Via the "Identification" icon .
The "Return to Operating mode" function in the "Passwords" tab removes access rights to parameter and protection setting mode.

Downloading of parameters and protection settings

Parameter and protection setting files can only be downloaded to the connected Sepam in Parameter setting mode.
Once the connection has been established, the procedure for downloading a parameter and protection setting file is as follows:
1. Activate the "Download Sepam" function in the "Sepam" menu.
2. Select the *.rpg file which contains the data to be downloaded.
3. Acknowledge the end of operation report.

Return to factory settings

This operation is only possible in Parameter setting mode, via the "Sepam" menu. All the Sepam general characteristics, protection settings and the control matrix go back to the default values.

Uploading of parameters and protection settings

The connected Sepam parameter and protection setting file can only be uploaded in Operating mode.
Once the connection has been established, the procedure for uploading a parameter and protection setting file is as follows:
1. Activate the "Upload Sepam" function in the "Sepam" menu.
2. Select the *.rpg file that is to contain the data to be uploaded.
3. Acknowledge the end of operation report.

Local operation of Sepam

Connected to Sepam, SFT2841 offers all the local operating functions available in the advanced UMI screen, plus the following functions:
■ Setting of Sepam internal clock, via the "General characteristics" tab. It should be noted that Sepam saves the date and time, in case the auxiliary power supply fails (< 24 hours)
■ Implementation of the disturbance recording function, via the "OPG" menu: validation/inhibition of the function, recovery of Sepam files, start-up of SFT2826
■ Consultation of the history of the last 64 Sepam alarms, with time-tagging
■ Access to Sepam diagnostic data, in the "Sepam" tab box, included in "Sepam diagnosis".
In Parameter setting mode, the switchgear diagnostic values can be modified: operation counter, cumulative breaking current to reset the values after a change of breaking device.

Connection window

The SFT2841 software connection window is used:
- To select an existing Sepam network or configure a new one
- To set up the connection to the selected Sepam network
- To select one Sepam unit from the network and access its parameters, settings, and operation and maintenance information.

Configuration of a Sepam network

Several configurations can be defined for the various Sepam installations.
A Sepam network configuration is identified by a name. It is saved on the SFT2841 PC in a file in the SFT2841 installation directory (default: C:\Program Files\Schneider\SFT2841\Net).

Configuration of a Sepam network is in 2 parts:
- Configuration of the communication network
- Configuration of the Sepam units.

Configuration of the communication network

To configure the communication network, first define:
- The type of link between the PC and the Sepam network
- The communication parameters, according to the type of link selected:
  - direct serial link
  - link via Ethernet TCP/IP

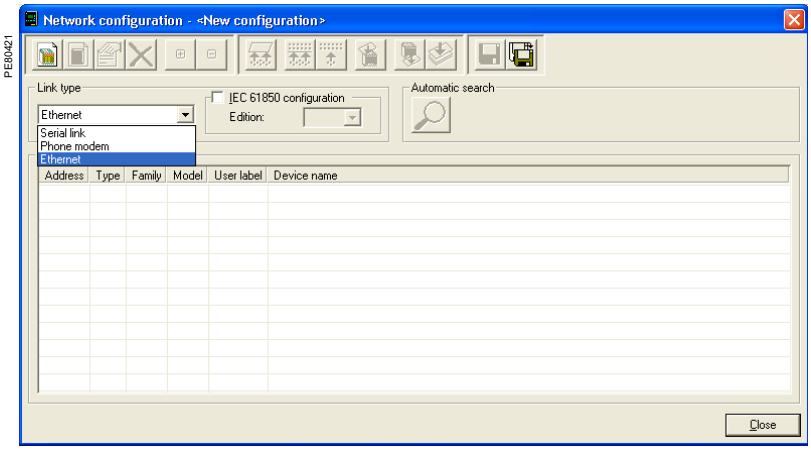

Configuration window for the communication network, according to the type of link: serial link or Ethernet link (TCP).

PE80422

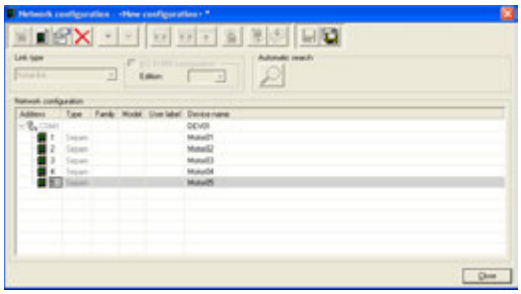

Configuration window for the serial link communication network.

Direct serial link

The Sepam units are connected to an RS 485 (or fiber-optic) multidrop network. Depending on the serial link interfaces available on the PC, the PC itself will be connected either directly to the RS 485 network (or fiber-optic HUB), or via an RS 232/RS 485 converter (or fiber-optic converter).

The communication parameters to be defined are:
- port: communication port used on the PC
- speed: 4800, 9600, 19200 or 38400 bauds
- parity: None, Even or Odd
- handshake: none, RTS or RTS-CTS
- time-out: from 100 to 3000 ms
- number of retries: from 1 to 3.

PE80423

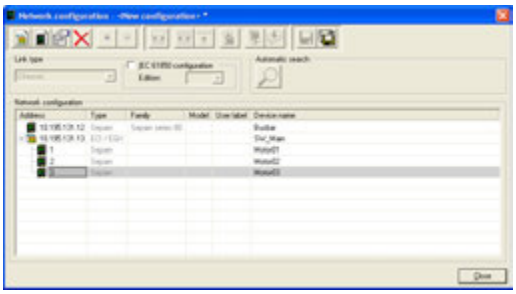

Configuration window for the Ethernet TCP/IP communication network.

Link via Ethernet TCP/IP

The Sepam units are connected to an RS 485 multidrop network over one or more Ethernet Modbus TCP/IP gateways (for example: EGX gateways or ECI850 servers that act as the Modbus TCP/IP gateway for the link with the SFT2841).

Use on an IEC 61850 network

SFT2841 can be used on an IEC 61850 network. In this case, it can be used to define the IEC 61850 configuration of Sepams connected to this network. See the Sepam IEC 61850 Communication user's manual (reference SEPED306024EN) for more information.

Configuration of the Modbus TCP/IP gateway

See the setup manual for the gateway used.
In general, the gateway should be assigned an IP address.
The configuration parameters for the gateway's RS 485 interface must be defined in accordance with the Sepam communication interface configuration:
- speed: 4800, 9600, 19200 or 38400 bauds
- character format: 8 data bits + 1 stop bit + parity (none, even, odd).

Configuration of communication on SFT2841

When configuring a Sepam network on SFT2841, the following communication parameters must be defined:
- Type of device: Modbus gateway, ECI850 or Sepam
- IP address: IP address for the connected remote equipment
- time-out: from 100 to 3000 ms.

A time-out of between 800 ms and 1000 ms is sufficient in most installations.
Communication via the TCP/IP gateway may, however, be slowed down if other applications want Modbus TCP/IP or IEC 61850 access at the same time.
The time-out value should then be increased (2 to 3 seconds).
- number of retries: from 1 to 3.

Note 1: *SFT2841 uses the Modbus TCP/IP communication protocol.*
Although communication is IP-based, use of SFT2841 is restricted to a local installation network based on an Ethernet network (LAN – Local Area Network).
The operation of SFT2841 over a WAN (Wide Area Network) cannot be guaranteed because of the presence of some routers or firewalls that may reject the Modbus protocol, causing communication times that would be incompatible with Sepam.

Note 2: *SFT2841 allows Sepam protection settings to be modified, and direct activation of the outputs. These operations, which could involve the operation of electrical equipment (opening and closing), and thus put the safety of people and installations at risk, are protected by the Sepam password. In addition to this protection, the E-LANs and S-LANs must be designed as private networks, protected from external actions by all suitable methods.*

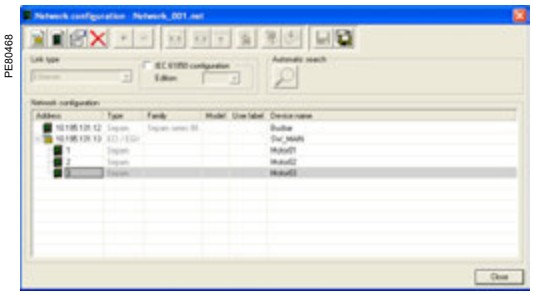

Sepam network connected to SFT2841.

Identification of Sepam units connected to the communication network

The Sepam units connected to the communication network are identified by either:
- Their Modbus address
- Their IP address
- The IP address for their gateway and their Modbus address

These addresses can be configured in either of the following ways:
- Manually, one by one:
  - the "Add" button is used to define a new device
  - the "Edit" button is used to modify the Modbus address if necessary
  - the "Delete" button removes a device from the configuration
- Or automatically for Modbus addresses, by running an automatic search of the Sepam units connected:
  - the "Automatic search"/"Stop search" button starts or interrupts the search
  - when SFT2841 recognizes a Sepam unit, its Modbus address and type are shown on screen
  - when a Modbus device other than Sepam responds to SFT2841, its Modbus address is displayed. The text "???" indicates that the device is not a Sepam.

The Sepam network configuration is saved in a file when the UMI window closes, by pressing the "OK" button.

Access to parameters and settings for an Easergy Sepam series 80 connected to a communication network.

Access to Sepam information

To establish communication between SFT2841 and a Sepam network, select the Sepam network configuration you want, select the device connected to the TCP/IP network and press "Connect".
The Sepam network is displayed in the connection window. SFT2841 polls all the equipment defined in the selected configuration. Each Sepam queried is represented by an icon:
- Sepam series 20 or Sepam series 40 actually connected to the network
- Easergy Sepam series 60 or Sepam series 80 actually connected to the network
- Sepam configured but not connected to the network
- Device other than Sepam connected to the network.

A summary report of each Sepam detected as present is also displayed:
- Sepam Modbus address
- Type of application and Sepam identification
- Any alarms present
- Any minor/major faults present.

To access parameters, settings and operation and maintenance information for a particular Sepam, click on the icon for that Sepam. SFT2841 then establishes a point-to-point connection with the selected Sepam.

UMI on front panel
Presentation

Basic UMI

This UMI includes:
- 2 LEDs indicating Sepam operating status:
  - green "**on**" LED: device on
  - red LED: device unavailable (initialization phase or detection of internal failure)
- 9 parameterizable yellow LEDs, fitted with a standard label (with SFT2841, a customized label can be printed on a laser printer)
- key for clearing faults and resetting
- 1 connection port for the link with the PC (CCA783 or CCA784 cord); the connector is protected by a sliding cover.

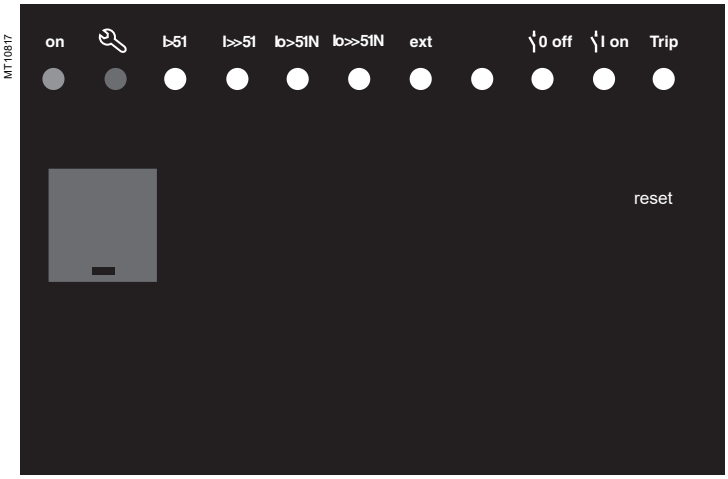

Fixed or remote advanced UMI

In addition to the basic UMI functions, this version provides:
- **A "graphic" LCD display** for the display of measurements, parameter/protection settings, and alarm and operating messages.
  The number of lines, size of characters and symbols are in accordance with the screens and language versions.
  The LCD display retrolighting can be activated by pressing a key.
- **A 9-key keypad with 2 operating modes**
  - **white keys for current operation:**
    ① display of measurements
    ② display of "switchgear, network diagnosis" data
    ③ display of alarm messages
    ④ resetting
    ⑤ acknowledgment and clearing of alarms
  - **blue keys activated in parameter and protection setting mode:**
    ⑦ access to protection settings
    ⑧ access to Sepam parameter settings including date and time [(1)]
    ⑨ used to enter the 2 passwords
    required to change protection and parameter settings.

The , , (④, ⑤, ⑥) keys are used to browse through the menus, and to scroll and accept the values displayed.

⑥ "**lamp test**" **keys**:
switching on sequence of all the LEDs.

(1) Date/time saved in case the auxiliary power supply fails (< 24 hours).

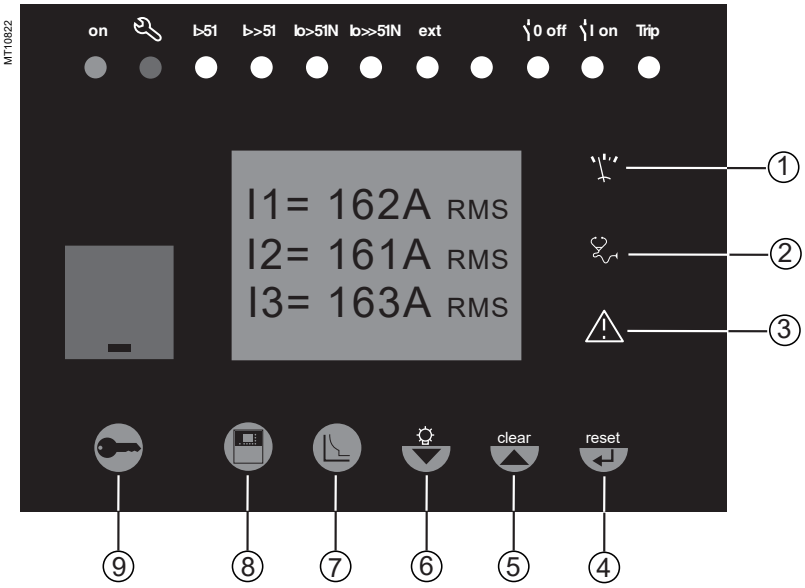

Access to measurements and parameters

The measurements and parameters can be accessed using the metering, diagnosis, status and protection keys.
They are arranged in a series of screens as shown in the diagram opposite.

■ The data are split up by category into 4 loops, associated with the following 4 keys:
□ key : measurements
□ key : switchgear diagnosis
and additional measurements:
□ key : general settings
□ key : protection settings.

■ When the user presses a key, the system moves on to the next screen in the loop. When a screen includes more than 4 lines, the user can move about in the screen via the cursor keys (,).

Example: measurement loop

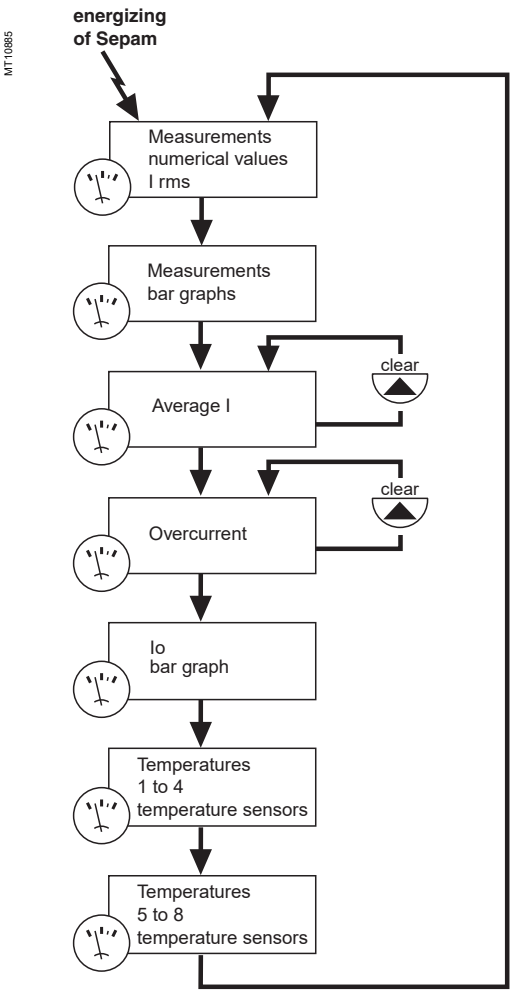

Protection and parameter setting modes

There are 3 levels of use:

■ Operator level: used to access all the screens in read mode and does not require any passwords

■ Protection setter level: requires the entry of the first password (key), allows protection setting (key)

■ Parameter setter level: requires the entry of the second password (key), allows modification of the general settings as well (key).

Only parameter setters can modify the passwords.
The passwords have 4 digits.

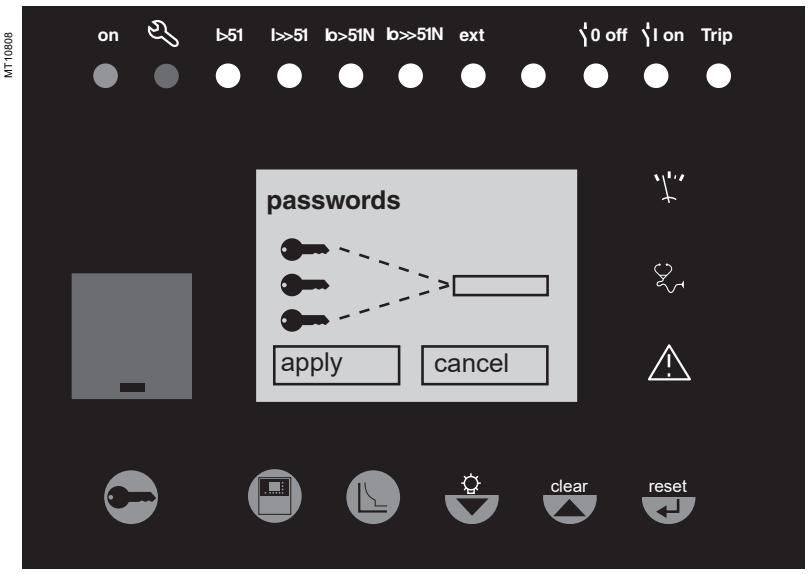

key

The "metering" key is used to display the variables measured by Sepam.

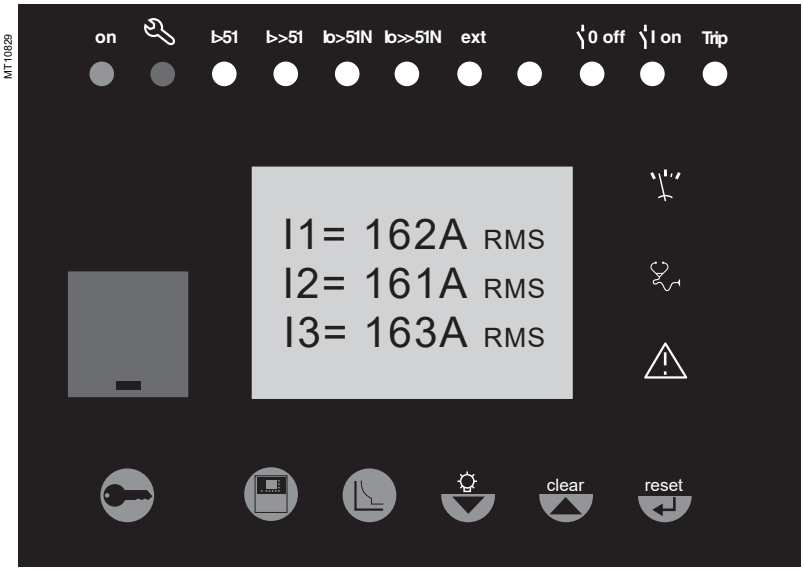

key

The "diagnosis" key provides access to diagnostic data on the breaking device and additional measurements, to facilitate fault analysis.

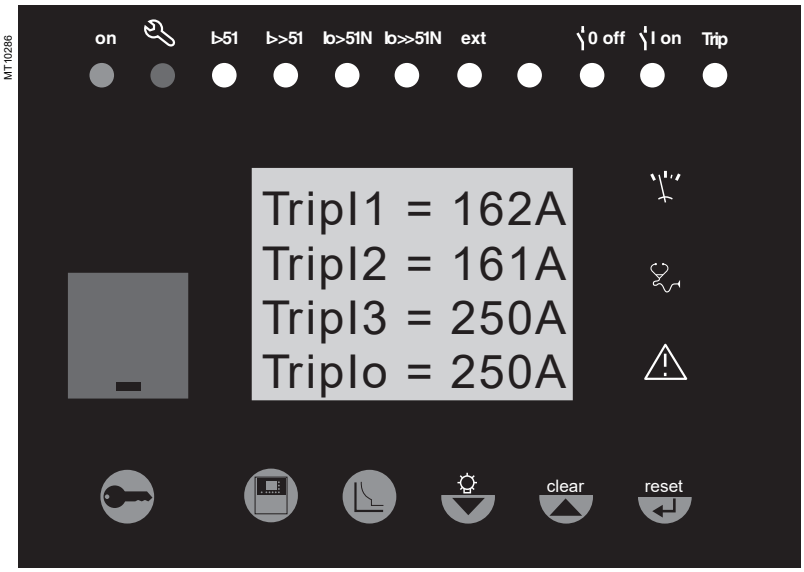

key

The "alarms" key is used to consult the 16 most recent alarms that have not yet been cleared.

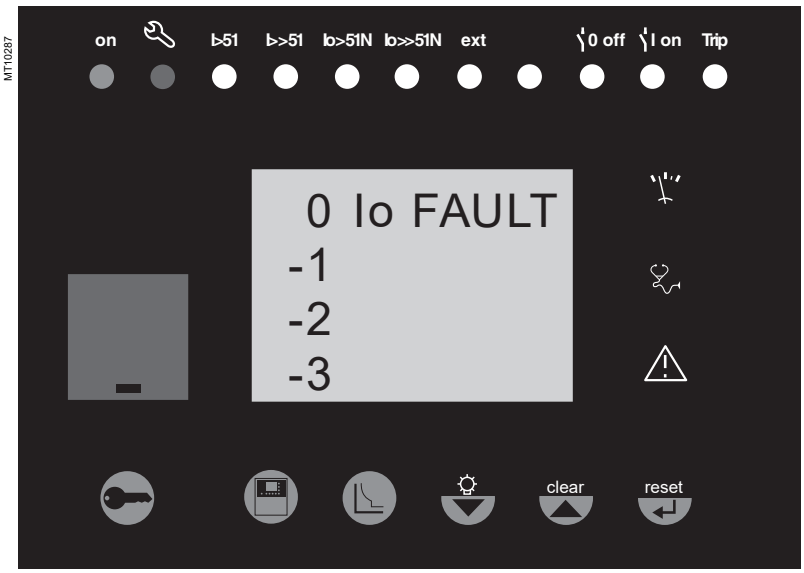

reset key

The "reset" key resets Sepam (extinction of LEDs and resetting of protection units after the disappearance of faults).
The alarm messages are not erased.

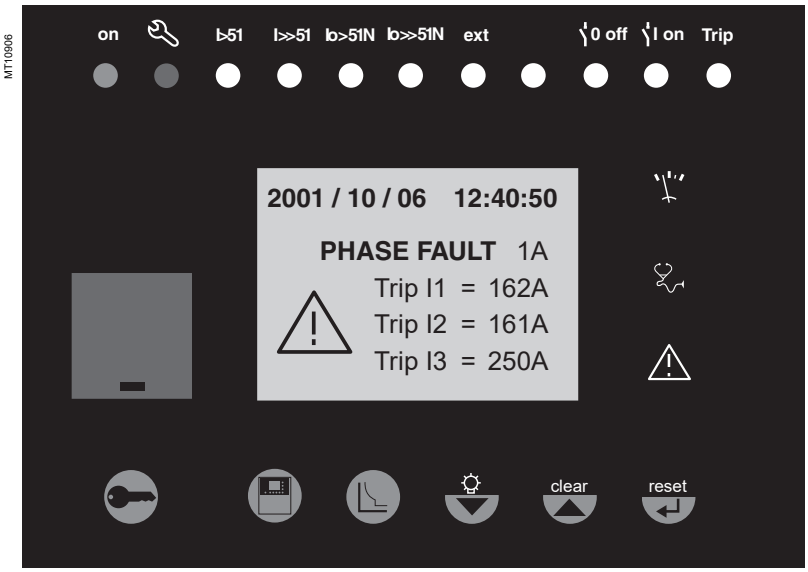

clear key

When an alarm is present on the Sepam display, the "clear" key is used to return to the screen that was present prior to the appearance of the alarm or to a less recent unacknowledged alarm. Sepam is not reset.
In the metering or diagnosis or alarm menus, the "clear" key can be used to reset the average currents, peak demand currents, running hours counter and alarm stack when they are shown on the display.

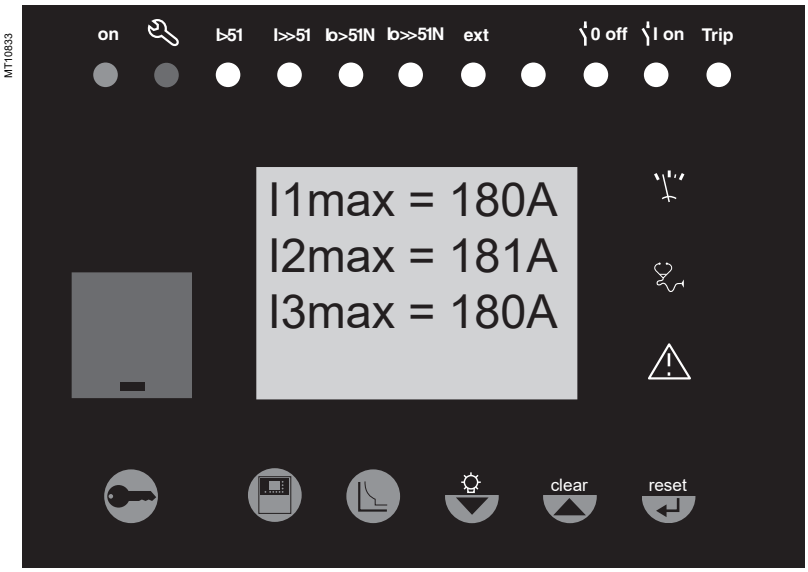

key

Press the "lamp test" key for 5 seconds to start up an LED and display test sequence.
When an alarm is present, the "lamp test" key is disabled.

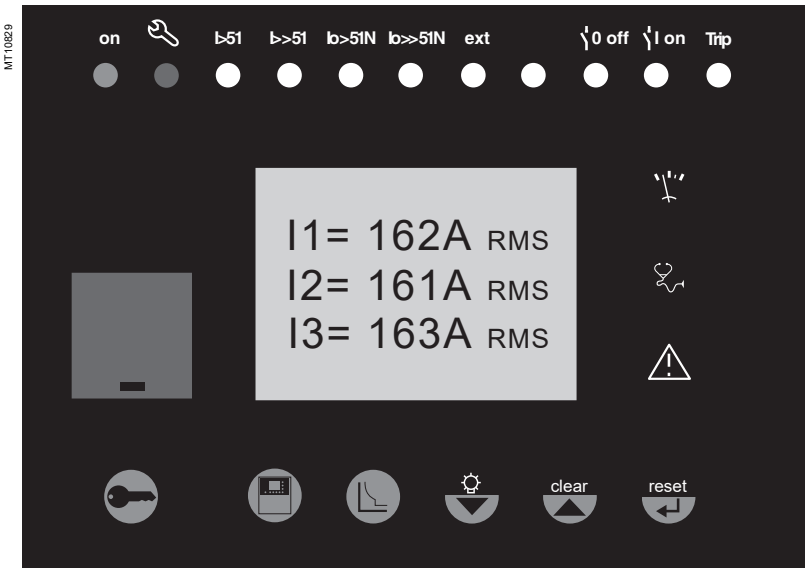

Advanced UMI
Blue keys for parameter and protection setting

key

The "status" key is used to display and enter the Sepam general settings including setting the Sepam date and time. They define the protected equipment characteristics and the different optional modules.
This key can also be used to access the version compatible with SFT2841 screen.

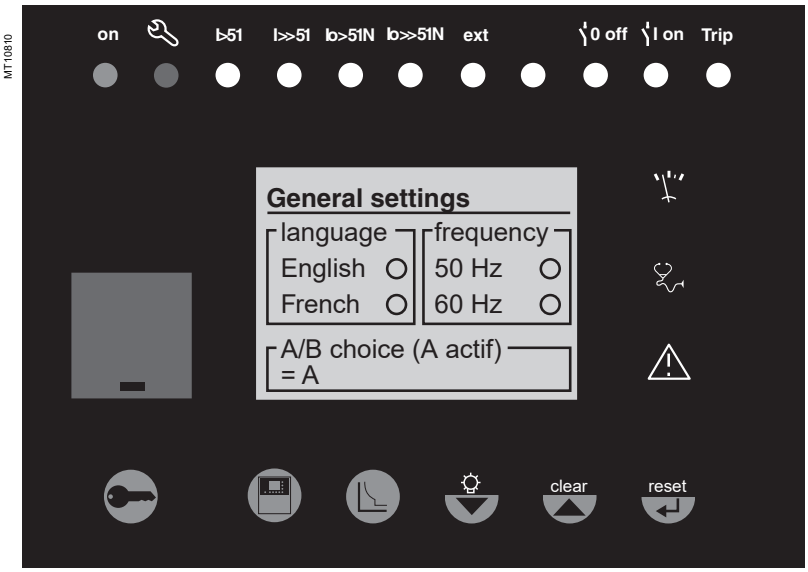

key

The "protection" key is used to display, set and enable or disable the protection units.

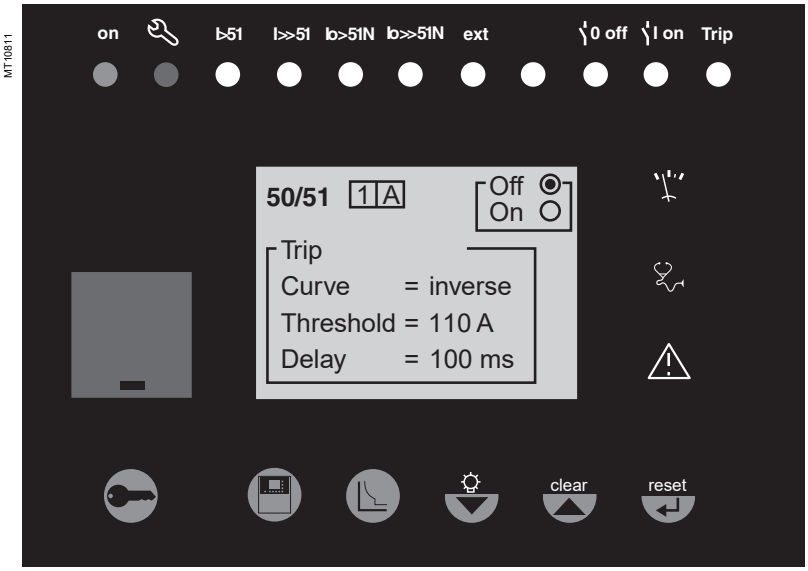

key

The "key" key is used to enter the passwords for access to the different modes:
- protection setting
- parameter setting

and return to "operating" mode (with no passwords).

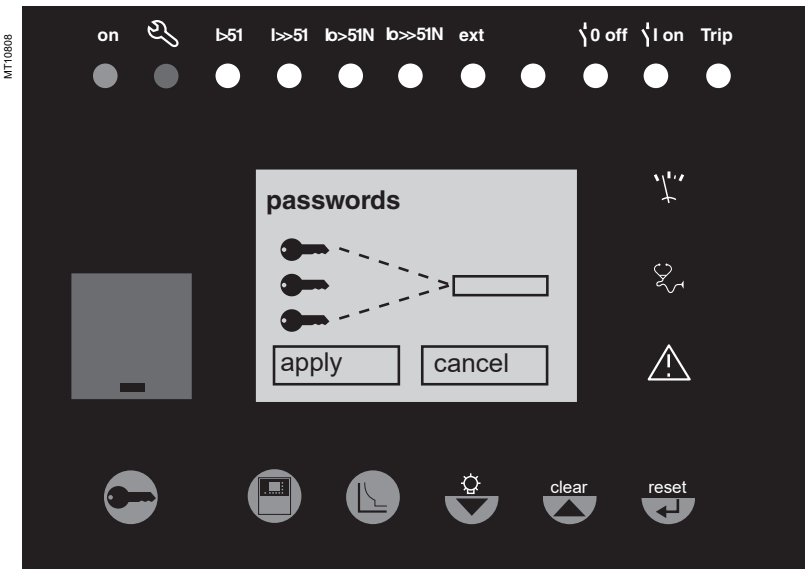

Advanced UMI
Blue keys for parameter and protection setting

reset key

The reset key is used to confirm the protection settings, parameter settings and passwords.

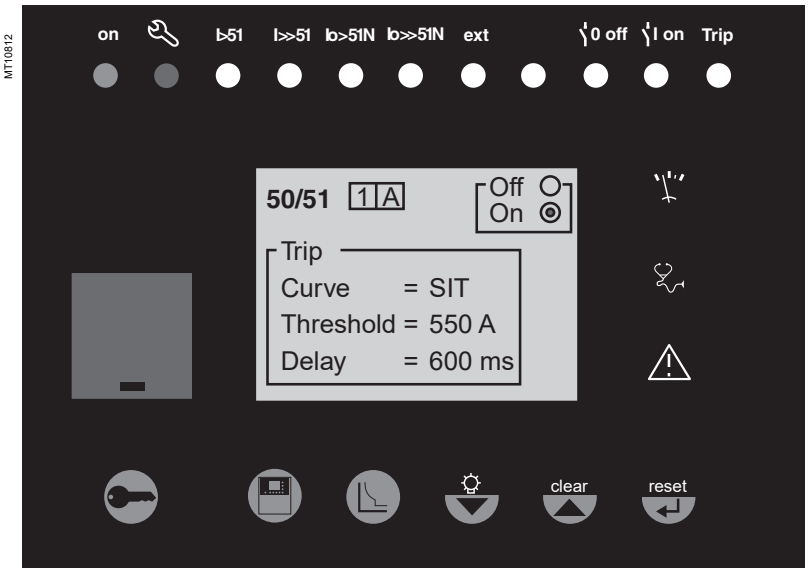

clear key

When there are no alarms on the Sepam display and the user is in the status, protection or alarm menus, the ▲ key is used to move the cursor upward.

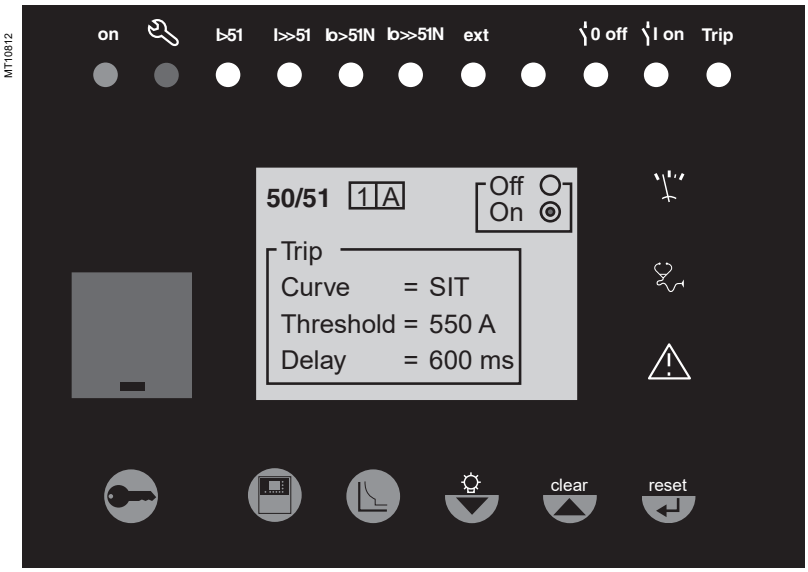

key

When there are no alarms on the Sepam display and the user is in the status, protection or alarm menus, the ▼ key is used to move the cursor downward.

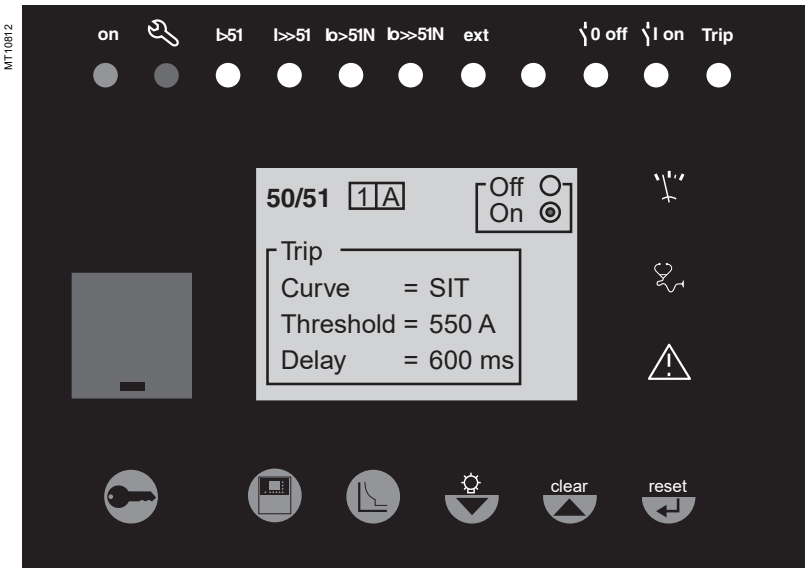

Use of passwords

Sepam has two 4-digit passwords.

■ The first password, symbolized by a key, is used to modify the protection settings

■ The second password, symbolized by two keys, is used to modify the protection settings and all the general settings.

The 2 factory-set passwords are: 0000

Entry of passwords

Press the key to display the following screen:

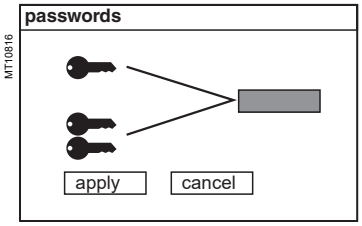

Press the key to position the cursor on the first digit 0|X|X|X

Scroll through the digits using the cursor keys (,) then confirm to go on to the next digit by pressing the key. Do not use characters other than numbers 0 to 9 for each of the 4 digits.

When the password for your qualification level is entered, press the key to position the cursor on the apply box. Press the key again to confirm.

When Sepam is in protection setting mode, a key appears at the top of the display.

When Sepam is in parameter setting mode, two keys appear at the top of the display.

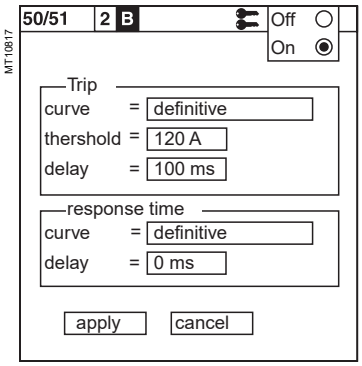

Access to the protection setting or parameter setting modes is disabled:

■ By pressing the key

■ Automatically if no keys are activated for more than 5 minutes.

Modification of passwords

Only the parameter setting qualification level (2 keys) or the SFT2841 allow modification of the passwords. Passwords are modified in the general settings screen, key.

Loss of passwords

If the factory-set passwords have been modified and the latest passwords entered have been irretrievably lost by the user, please contact your local after-sales service representative.

Entry of parameters or settings

Principle applicable to all Sepam screens

(example of phase overcurrent protection)

■ Enter the password

■ Access the corresponding screen by successively pressing the key

■ Move the cursor by pressing the key for access to the desired field (e.g. curve)

■ Press the key to confirm the choice, then select the type of curve by pressing the or key and confirm by pressing the key

■ Press the key to reach the following fields, up to the apply box. Press the key to confirm the setting.

Entry of numerical values

(e.g. current threshold value)

■ Position the cursor on the required field using the keys, then confirm to go on to the next digit by pressing the key

■ Select the first digit to be entered and set the value by pressing the or key (choice of ___: 0……9)

■ Press the key to confirm the choice and go on to the following digit.

The values are entered with 3 significant digits and a period.

The unit (e.g. A or kA) is chosen using the last digit.

■ Press the key to confirm the entry, then press the key for access to the following field

■ All of the values entered are only effective after the user confirms by selecting the apply box at the bottom of the screen and presses the key.

Default parameter setting

The Sepam units are delivered with default parameter setting and protection setting according to the type of application.
These "factory" settings are also used with the SFT 2841 software:
■ for the creation of new files in disconnected mode
■ for a return to the "factory" settings in connected mode.

S20, S24 (1), T20, T24 (1), M20 applications

Hardware configuration
■ Identification: Sepam xxxx
■ Model: UX
■ MES module: absent
■ MET module: absent
■ MSA module: absent
■ DSM module: present
■ ACE module: absent.

Output parameter setting
■ Outputs used: O1 to O4
■ Shunt trip units: O1, O3
■ Undervoltage trip units: O2, O4
■ Impulse mode: no (latched).

Program logic
■ Circuit breaker control: no
■ Logic discrimination: no
■ Logic input assignment: not used.

General characteristics
■ Network frequency: 50 Hz
■ Group of settings: A
■ Enable remote setting: no
■ Working language: English
■ CT rating: 5 A
■ Number of CTs: 3 (I1, I2, I3)
■ Rated current In: 630 A
■ Basic current Ib: 630 A
■ Integration period: 5 min
■ Residual current: 3I sum
■ Pre-trig for disturbance recording: 36 periods.

Protection functions
■ All the protection functions are "Off"
■ The settings comprise values and choices that are informative and consistent with the general default characteristics (in particular rated current In)
■ Tripping behavior:
□ latching: yes (except for functions 50BF, 49RMS, 37 and 66)
□ activation of output O1: yes (except for functions 50BF and 66)
□ disturbance recording triggering: with (except for functions 50BF, 48/51LR and 66).

Control matrix
Each Sepam has default program logic according to the type (S20, T20, etc.) as well as messages for the different LEDs.
The functions are assigned according to the most frequent use of the unit. This parameter setting and/or marking can be customized if required using the SFT 2841 software tool.
■ S20 application:
□ activation of output O2 upon protection tripping
□ activation of LEDs according to front panel markings
□ watchdog on output O4
□ disturbance recording triggering upon signal pick-up
■ Additional functions for T20 application:
□ activation of O1 without latching upon tripping of temperature monitoring 1 to 7
□ activation of O1 and LED L9 without latching upon thermal overload tripping
■ Additional functions for M20 application:
□ activation of outputs O1 and O2 and LED L9 upon tripping of functions, 37 (phase undercurrent) and 51LR (locked rotor)
□ activation of output O2 upon tripping of function 66 (starts per hour)
□ latching for function 51LR
■ Complement for S24, T24 applications:
All functions, except for 49 RMS, activate the 50BF protection function in the absence of circuit breaker control.
By default, the CLPU 50/51 and CLPU 50N/51N functions are off.

***(1)** Applications S24 and T24 perform the functions of applications S23 and T23 respectively and, in addition, the phase overcurrent and earth fault cold load pick-up functions.*

B21[1] and B22 applications

Hardware configuration

- Identification: Sepam xxxx
- Model: UX
- MES module: absent
- MET module: absent
- MSA module: absent
- DSM module: present
- ACE module: absent.

Output parameter setting

- Outputs used: O1 to O4
- Shunt trip units: O1 to O3
- Undervoltage trip units: O4
- Impulse mode: no (latched).

Program logic

- Circuit breaker control: no
- Logic input assignment: not used.

General characteristics

- Network frequency: 50 Hz
- Enable remote setting: no
- Working language: English
- Primary rated voltage (Unp): 20 kV
- Secondary rated voltage (Uns): 100 V
- Voltages measured by VTs: V1, V2, V3
- Residual voltage: sum of 3Vs
- Pre-trig for disturbance recording: 36 periods.

Protection functions

- All the protections are "Off"
- The settings comprise values and choices that are informative and consistent with the general characteristics by default
- Latching: no
- Disturbance recording triggering: with

Control matrix

- Assignment of output relays and LEDs according to chart:

Functions		Outputs				LEDs								
B21	B22	O1	O2	O3	O4	L1	L2	L3	L4	L5	L6	L7	L8	L9
27D-1	27D-1		■				■							
27D-2	27D-2	■					■							■
27R	27R			■				■						
27-1	27-1		■			■								
27-2	27-2	■				■								■
27S-1	27S-1	■				■								■
27S-2	27S-2	■				■								■
27S-3	27S-3	■				■								■
59-1	59-1		■						■					
59-2	59-2	■							■					■
59N-1	59N-1		■							■				
59N-2	59N-2	■								■				■
81H	81H	■									■			■
81L-1	81L-1		■									■		
81L-2	81L-2	■											■	■
	81R	■											■	■

- Disturbance recording triggering upon signal pick-up
- Watchdog on output O4.

LED marking

L1: U < 27
L2: U < 27D
L3: U < 27R
L4: U > 59
L5: U > 59N
L6: F > 81H
L7: F < 81L
L8: F << 81L
L9: Trip

(1) Type B21 performs the same functions as cancelled type B20.

Commissioning: principles and method

⚠ ⚠ DANGER

HAZARD OF ELECTRIC SHOCK, ELECTRIC ARC OR BURNS

■ Only qualified personnel should commission this equipment. Such work should be performed only after reading this entire set of instructions.
■ NEVER work alone.
■ Obey all existing safety instructions when commissioning and maintaining high-voltage equipment.
■ Beware of potential hazards and wear personal protective equipment.

Failure to follow these instructions will result in death or serious injury.

Protection relay testing

Protection relays are tested prior to commissioning, with the dual aim of maximizing availability and minimizing the risk of malfunction of the assembly being commissioned. The problem consists of defining the consistency of the appropriate tests, keeping in mind that the relay is always involved as the main link in the protection chain.
Therefore, protection relays based on electromechanical and solid state technologies must be systematically submitted to detailed testing, not only to qualify relay commissioning, but also to check that they actually are in good operating order and have the required level of performance.

The Sepam concept makes it possible to do away with such testing.
In effect:
■ The use of digital technology ensures the reproducibility of the stated performances
■ Each of the Sepam functions has undergone full factory qualification
■ An internal self-testing system provides continuous information on the state of the electronic components and the integrity of the functions (e.g. automatic tests diagnose the level of component polarization voltages, the continuity of the analog value acquisition chain, non-alteration of RAM memory, absence of settings outside the tolerance range) and thereby ensures a high level of availability.

Sepam is therefore ready to operate without requiring any additional qualification testing that concerns it directly.

Sepam commissioning tests

The preliminary Sepam commissioning tests can be limited to a commissioning check, i.e.:
■ Checking compliance with BOMs and hardware installation diagrams and rules during a preliminary general check
■ Checking compliance of the general settings and protection settings entered with the setting sheets
■ Checking current or voltage input connections by secondary injection tests
■ Checking logic input and output connections by simulation of input data and forcing of output status
■ Validating the complete protection chain
■ Checking the connection of the optional MET148-2 and MSA141 modules.
The various checks are described further on.

General principles

■ All the tests should be carried out with the MV cubicle completely isolated and the MV circuit breaker racked out (disconnected and open)
■ All the tests are to be performed under operating conditions. We strongly recommend that you do not modify, even temporarily, the wiring or the settings to facilitate testing..

■ The SFT2841 parameter setting and operating software is the basic tool for all Sepam users. It is especially useful during Sepam commissioning tests. The tests described in this document are systematically based on the use of that tool.

Method

For each Sepam:
■ Only carry out the checks suited to the hardware configuration and the functions activated
■ Use the test sheet provided to record the results of the commissioning tests.
A comprehensive description of all the tests is given further on:
■ Checking phase current input connections
□ with 1 A/5 A transformer, see page 219
□ with LPCT type current sensor, see page 220
■ Checking the residual current input connection, see page 221
■ Checking phase voltage input connections, see page 222
■ Checking the residual voltage input connection, see page 223.

Testing and metering equipment required

Generators

- Sinusoidal AC current generator:
  - 50 or 60 Hz frequency (according to the country)
  - single-phase type, adjustable from 0 to 50 Arms
  - with connector suited to the built-in test terminal box in the current input connection diagram
- Sinusoidal AC voltage generator:
  - 50 or 60 Hz frequency (according to the country)
  - single-phase type, adjustable from 0 to 150 Vrms
  - with connector suited to the built-in test terminal box in the voltage input connection diagram
- DC voltage generator:
  - adjustable from 48 to 250 V DC
  - for adaptation to the voltage level of the input being tested
  - with electric cord and clamps, wire grip or touch probes.

Metering devices

- 1 ammeter, 0 to 50 Arms
- 1 voltmeter, 0 to 150 Vrms.

Computer equipment

- PC with minimum configuration:
  - Microsoft Windows XP or Vista
  - 400 MHz Pentium processor
  - 64 MB of RAM
  - 200 MB free on hard disk
  - CD-ROM drive
- SFT2841 software
- CCA783 serial connection or CCA784 USB cord between the PC and Sepam.

Documents

- Complete connection diagram of Sepam and additional modules, with:
  - phase current input connection to the corresponding CTs via the test terminal box
  - residual current input connection
  - phase voltage input connection to the corresponding VTs via the test terminal box
  - residual voltage input connection to the corresponding VTs via the test terminal box
  - logic input and output connection
  - temperature sensor connection
  - analog output connection
- Hardware BOMs and installation rules
- All Sepam parameter and protection settings, available in paper format.

General examination and preliminary actions

Checking to be done prior to energizing

Apart from the mechanical state of the equipment, use the diagrams and BOMs provided by the contractor to check:

- Identification of Sepam and accessories defined by the contractor
- Correct earthing of Sepam (via terminal 17 of the 20-pin connector)
- Conformity of Sepam auxiliary voltage (indicated on the label stuck to the right side of the base unit) with the auxiliary supply voltage of the switchboard (or cubicle)
- Correct connection of the auxiliary voltage (terminal 1: AC or positive polarity; terminal 2: AC or negative polarity)
- Presence of a residual current measurement core balance CT and/or additional modules connected to Sepam, when applicable
- Presence of test terminal boxes upstream from the current inputs and voltage inputs
- Conformity of connections between Sepam terminals and the test terminal boxes.

Connections

Check that the connections are tightened (with equipment not energized).
The Sepam connectors must be correctly plugged in and locked.

Energizing

1. Switch on the auxiliary power supply.
2. Check that Sepam performs the following initialization sequence, which lasts approximately 6 seconds:

- Green ON and red LEDs on
- Red LED off
- Pickup of "watchdog" contact.

The first screen displayed is the phase current or phase voltage metering screen according to the application.

Implementation of the SFT2841 software for PC

1. Start up the PC.
2. Connect the PC RS 232 serial port or the USB port to the communication port on the front panel of Sepam using the CCA783 or the CCA784 cord.
3. Start up the SFT2841 software, by clicking on the related icon.
4. Choose to connect to the Sepam to be checked.

Identification of Sepam

1. Note the Sepam serial number given on the label stuck to the right side of the base unit.
2. Note the Sepam type and software version using the SFT2841 software, "Sepam Diagnosis" screen. (This information is also available on the advanced UMI, in the Sepam general settings).
3. Enter them in the test sheet.

Checking parameter and protection settings

Determination of parameter and protection settings

All of the Sepam parameter and protection settings are determined beforehand by the design department in charge of the application, and should be approved by the customer.
It is presumed that the study has been carried out with all the attention necessary, or even consolidated by a network coordination study.
All of the Sepam parameter and protection settings should be available at the time of commissioning:
■ in hard copy format (with the SFT2841 software, the parameter and protection setting file for a Sepam can be printed directly or exported to a text file for editing)
■ and, when applicable, in the format of a file to be downloaded into Sepam using the SFT2841 software.

Checking parameters and protection settings

Check to be made when the Sepam parameter and protection settings have not been entered or downloaded during commissioning testing, to confirm the conformity of the parameter and protection settings entered with the values determined during the study.
The aim of this check is not to confirm the relevance of the parameter and protection settings.
1. Go through all the parameter and protection setting screens in the SFT2841 software, in the order proposed in guided mode.
2. For each screen, compare the values entered in the Sepam with the values recorded in the parameter and protection setting file.
3. Correct any parameter and protection settings that have not been entered correctly, proceeding as indicated in the "Use of the (SFT2841) software" section of this manual.

Conclusion

Once the checking has been done and proven to be conclusive, as of that phase, the parameter and protection settings should not be changed any further and are considered to be final.
In order to be conclusive, the tests which follow must be performed with these parameter and settings. We strongly recommend that you do not modify, even temporarily, any of the existing values to facilitate testing.

Checking phase current input connections
1 A/5 A current transformers

Description
Check to be carried out for Sepam S20, S23, S24, T20, T23, T24 or M20, when phase currents are measured by 1 A or 5 A current transformers.

Procedure
1. To inject a current into the phase 1 input, connect the single-phase generator to the test terminal box using the plug provided, in accordance with the diagram below:

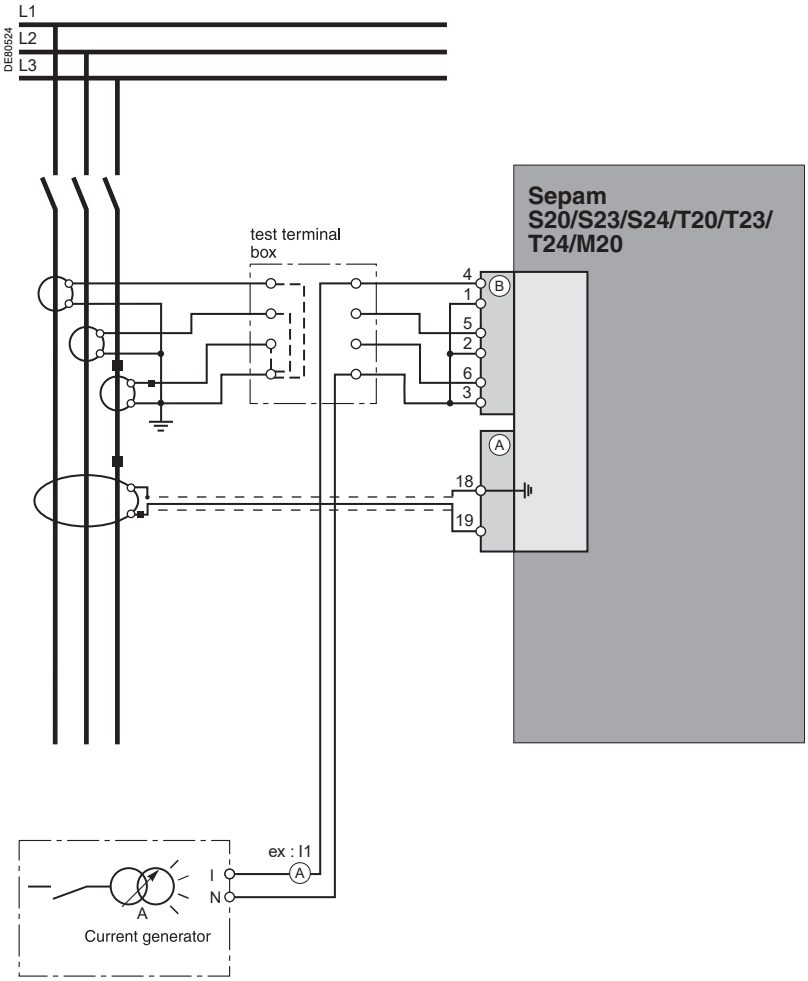

2. Turn on the generator.
3. Inject the CT secondary rated current, i.e. 1 A or 5 A.
4. Use the SFT2841 software to check that the phase 1 current value is approximately equal to the CT primary rated current.
5. If the residual current is calculated by taking the sum of the 3 phase currents, use the SFT2841 software to check that the residual current value is approximately equal to the CT primary rated current.
6. If the residual current is measured via 3 phase CTs, use the SFT2841 software to check that the residual current value is approximately equal to the CT primary rated current.
7. Turn off the generator.
8. Proceed in the same way for the other 2 phase current inputs.
9. At the end of the test, put the cover back on the test terminal box.

Checking phase current input connections
LPCT type current sensors

Description
Check to be performed for Sepam S20, S23, S24, T20, T23, T24 or M20, when phase currents are measured by LPCT-type current sensors.

Phase current measurement by LPCT sensors
■ The 3 LPCT current sensors are connected via an RJ45 plug to the CCA670 connector which is to be mounted on the rear panel of Sepam, identified as (B)
■ The connection of only one or two LPCT sensors is not allowed and causes Sepam to go into the fail-safe position
■ The primary rated current In measured by the LPCT sensors is to be entered as a Sepam general setting and configured by microswitches on the CCA670 connector.

Procedure
The tests to be carried out to check phase current input connections are the same whether the phase currents are measured by CTs or by LPCT sensors. Only the Sepam current input connection procedure and current injection values change.
To test current inputs connected to LPCT sensors with a standard injection box, the ACE917 injection adapter is required.
The ACE917 adapter is inserted between:
■ The standard injection box
■ The LPCT test plug:
□ integrated in the Sepam CCA670 connector
□ or transferred by means of the CCA613 accessory.
The ACE917 injection adapter should be set according to the currents selected on the CCA670 connector: the ACE917 setting should be equal to the number of the microswitch that is set to 1 on the CCA670.
The injection value depends on the primary rated current selected on the CCA670 connector and entered in the Sepam general settings, i.e.:
■ 1 A for the following values (in Amps): 25, 50, 100, 133, 200, 320, 400, 630
■ 5 A for the following values (in Amps): 125, 250, 500, 666, 1000, 1600, 2000, 3150.

Block diagram (without CCA613 accessory)

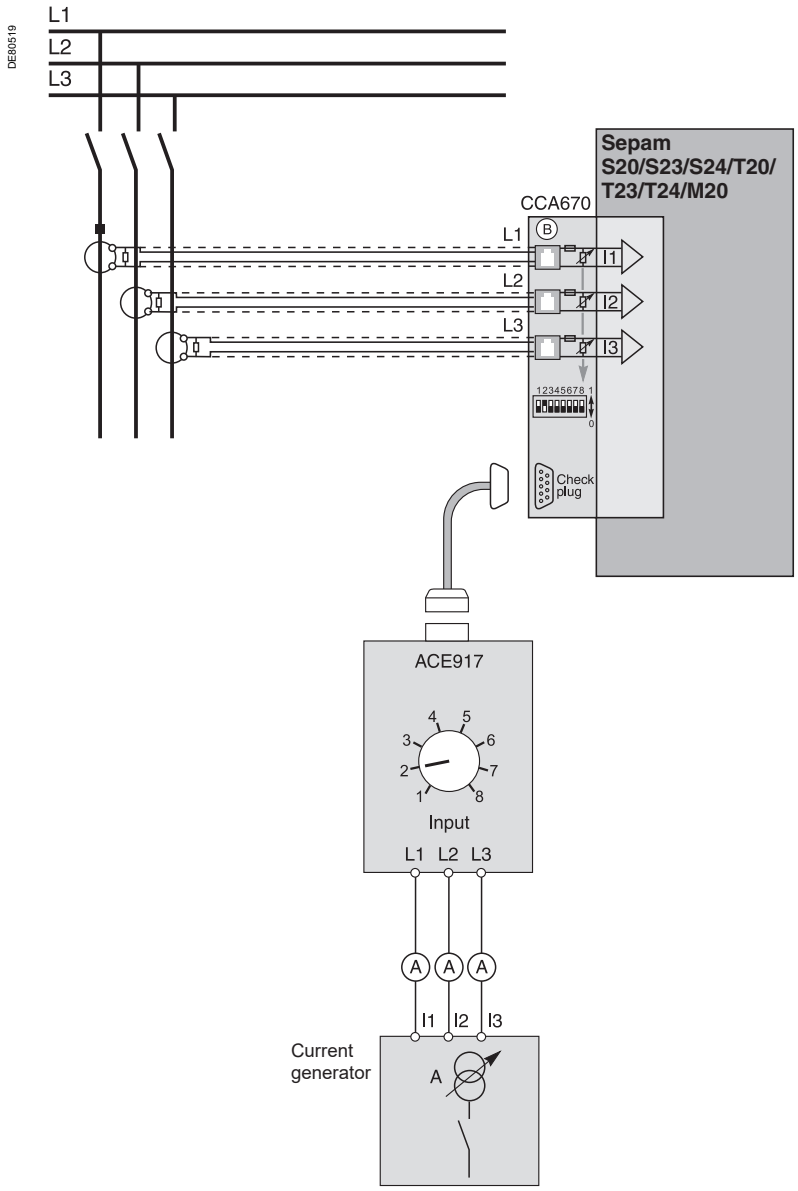

Checking the residual current input connection

Description

Check to be carried out for Sepam S20, S23, S24, T20, T23, T24 or M20, when the residual current is measured by a specific sensor:

- CSH120, CSH200 or CSH300 core balance CT
- Another core balance CT connected to an ACE990 interface
- A single 1 A or 5 A CT encompassing the 3 phases.

Procedure

1. Connect the single-phase current generator to inject current into the primary circuit of the core balance CT or the CT, in accordance with the diagram below:

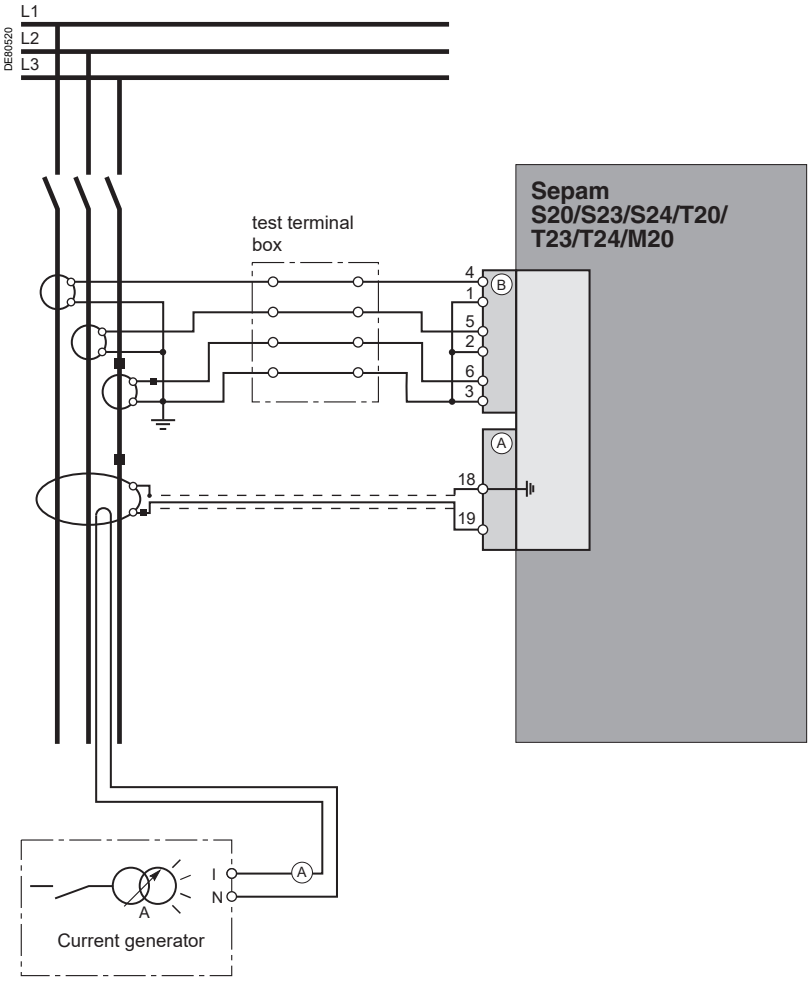

2. Turn on the generator.
3. Inject a 5 A primary residual current.
4. Use the SFT2841 software to check that the residual current value is approximately equal to 5 A.
5. Turn off the generator.

Checking phase voltage input connections

Description

Check to be carried out for Sepam B21 or B22.

Procedure

1. To apply a phase-to-neutral voltage to the phase 1 voltage input, connect the single-phase voltage generator to the test terminal box using the plug provided, in accordance with the diagram below:

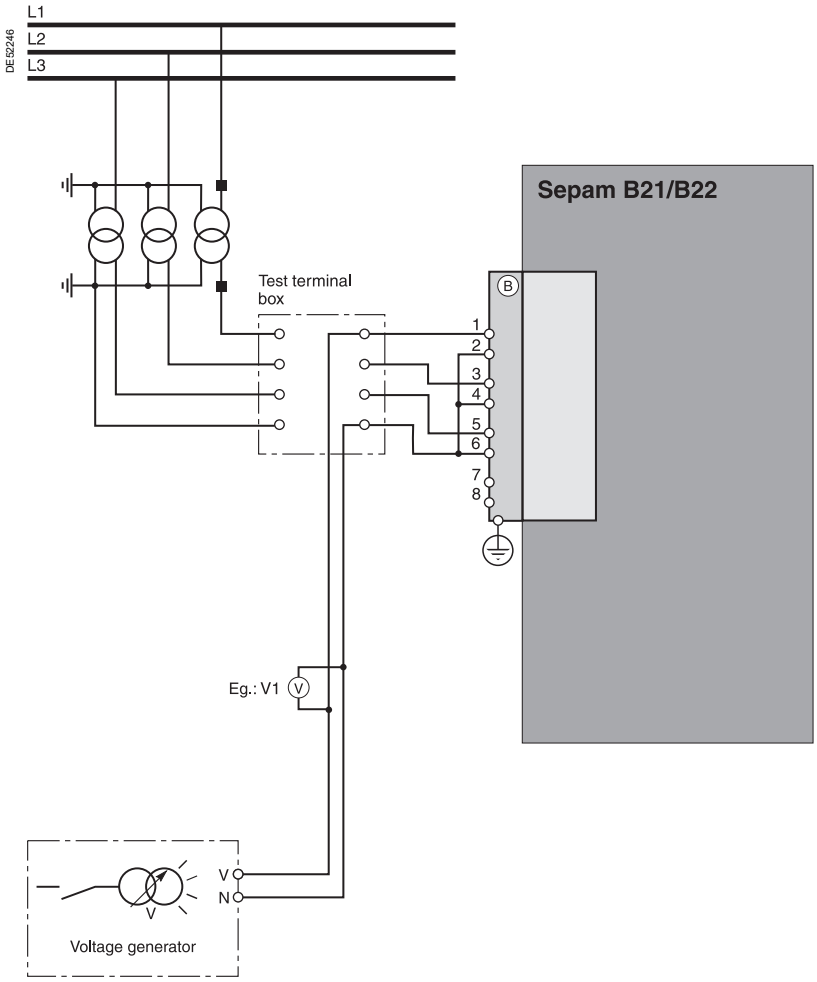

2. Turn on the generator.
3. Apply the VT secondary rated phase-to-neutral voltage (Uns/$\sqrt{3}$).
4. Use the SFT2841 software to check that the phase-to-neutral voltage V1 is equal to the VT primary rated phase-to-neutral voltage (Unp/$\sqrt{3}$).
5. If the residual voltage is calculated by taking the sum of the 3 voltages, use the SFT2841 software to check that the residual voltage value is approximately equal to the VT primary rated phase-to-neutral voltage (Unp/$\sqrt{3}$).
6. Turn off the generator.
7. Proceed in the same way for the other 2 phase voltage inputs.
8. At the end of the test, put the cover back on the test terminal box.

Checking the residual voltage input connection

Description

Check to be carried out for Sepam B21 or B22, when the residual voltage is measured by 3 VTs on the secondary circuits connected in an open delta arrangement.

Procedure

1. Connect the single-phase voltage generator to the test terminal box using the plug provided, in accordance with the diagram below:

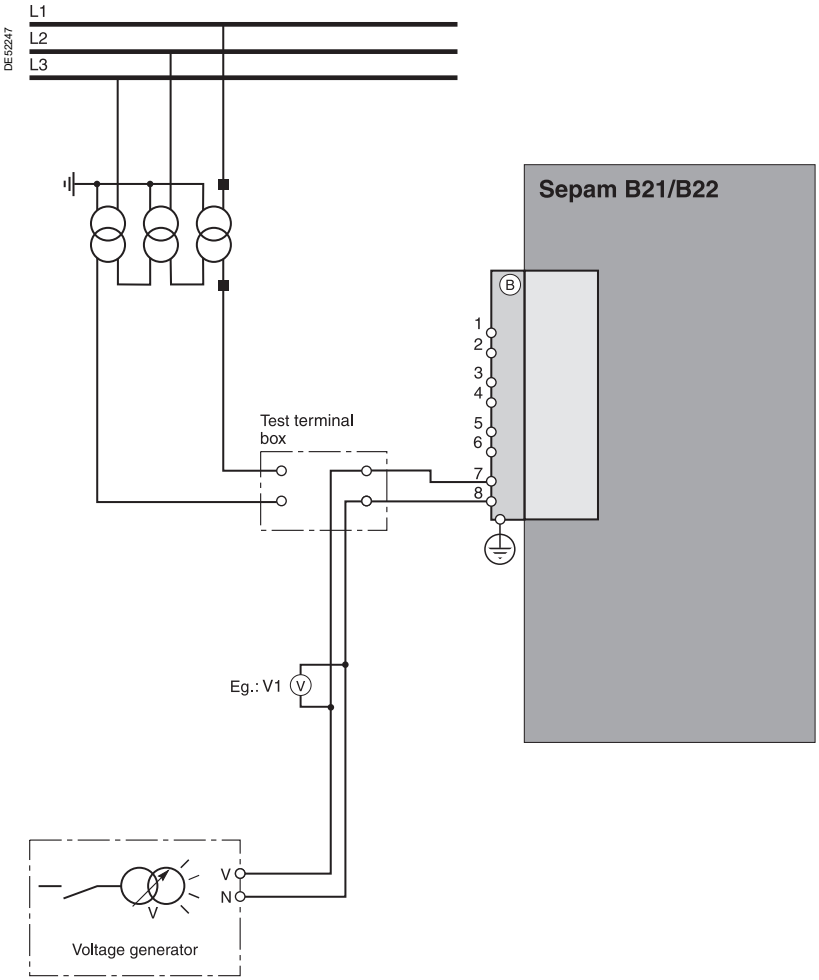

2. Turn on the generator.
3. Apply the VT secondary rated phase-to-neutral voltage (Uns/$\sqrt{3}$).
4. Use the SFT2841 software to check the residual voltage value V0.
5. V0 should be equal to the VT primary rated phase-to-neutral voltage (Unp/$\sqrt{3}$ or Vnp) if the VTs deliver Uns/$\sqrt{3}$ to the secondary circuit.
6. V0 should be equal to the VT primary rated phase-to-phase voltage (Unp or $\sqrt{3}$ Vnp) if the VTs deliver Uns/3 to the secondary circuit.
7. Turn off the generator.
8. Put the cover back on the test terminal box.

Checking logic input and output connections

MT10588

SFT2841 "Input, output, indicator status" screen.

Checking logic input connections

Procedure

Proceed as follows for each input:

1. If the input supply voltage is present, use an electric cord to short-circuit the contact that delivers logic data to the input.

2. If the input supply voltage is not present, apply a voltage supplied by the DC voltage generator to the terminal of the contact linked to the chosen input, being sure to comply with the suitable polarity and level.

3. Observe the change of status of the input using the SFT2841 software, in the "Input, output, indicator status" screen.

4. At the end of the test, if necessary, press the SFT2841 Reset key to clear all messages and deactivate all outputs.

MT10589

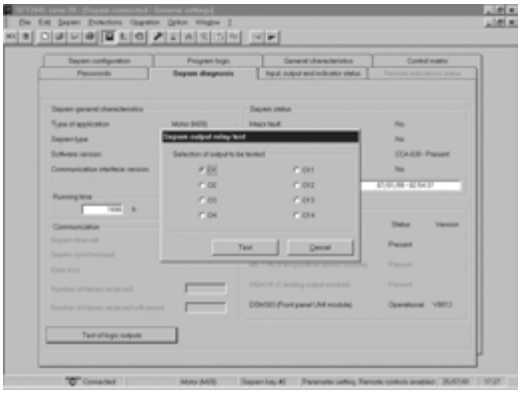

SFT2841 "Sepam Diagnosis - output relay test" screen.

Checking logic output connections

Procedure

Check carried out using the "Output relay test" function, activated via the SFT2841 software, in the "Sepam Diagnosis" screen.

Only output O4, when used for the watchdog, can be tested.

This function requires prior entry of the "Parameter setting" password.

1. Activate each output relay using the buttons in the SFT2841 software.
2. The activated output relay changes status over a period of 5 seconds.
3. Observe the change of status of the output relay through the operation of the related switchgear (if it is ready to operate and is powered), or connect a voltmeter to the terminals of the output contact (the voltage cancels itself out when the contact closes).
4. At the end of the test, if necessary, press the SFT2841 Reset key to clear all messages and deactivate all outputs.

Validation of the complete protection chain

Principle

The complete protection chain is validated during the simulation of a fault that causes tripping of the breaking device by Sepam.

Procedure

1. Select one of the protection functions that trips the breaking device.
2. According to the type of Sepam, inject a fault current or voltage.
3. Observe the tripping of the breaking device.

Checking optional module connections

Checking temperature sensor input connections to the MET148-2 module

The temperature monitoring function provided by Sepam T20, T23, T24 or M20 units checks the connection of each sensor that is configured.
An "RTD FAULT" alarm is generated whenever one of the sensors is detected as being short-circuited or disconnected (absent).
To identify the faulty sensor or sensors:
1. Display the temperature values measured by Sepam T20 or M20 using the SFT2841 software.
2. Check the consistency of the temperatures measured:
■ The temperature displayed is "****" if the sensor is short-circuited (T < -35°C or T < -31°F)
■ The temperature displayed is "-****" if the sensor is disconnected (T > 205°C or T > 401°F).

Checking the analog output connection to the MSA141 module

1. Identify the measurement associated by parameter setting with the analog output using the SFT2841 software.
2. Simulate, if necessary, the measurement linked to the analog output by injection.
3. Check the consistency between the value measured by Sepam and the indication given by the device connected to the analog output.

Test sheet
Sepam series 20

Project: ..... **Type of Sepam** ☐☐☐

Switchboard: ..... **Serial number** ☐☐☐☐☐☐☐

Cubicle: ..... **Software version** V ☐☐☐☐

Overall checks

Check the box v when the check has been made and is conclusive

Type of check	
Preliminary general examination, prior to energizing	☐
Energizing	☐
Parameter and protection settings	☐
Logic input connection	☐
Logic output connection	☐
Validation of the complete protection chain	☐
Analog output connection to the MSA141 module	☐
Temperature sensor input connection to the MET148-2 module (for type T20, T23, T24 or M20)	☐

Checking of Sepam S20, S24, T20, T24 or M20 current inputs

Type of check	Test performed	Result	Display	
Phase current input connection	Secondary injection of CT rated current, i.e. 1 A or 5 A	CT rated primary current	I1 =.....	☐
			I2 =.....	
			I3 =.....	
Residual current value obtained by 3 phase CTs	Secondary injection of CT rated current, i.e. 1 A or 5 A	CT rated primary current	I0 =.....	☐
Residual current input connection to a specific sensor: ■ **CSH120, CSH200, CSH300** ■ **Other core balance CT + ACE990** ■ **1 x 1 A or 5 A CT**	Injection of 5 A into primary circuit of core balance CT or CT	Injected current value	I0 =.....	☐

Checking of Sepam B21 or B22 voltage inputs

Type of check	Test performed	Result	Display	
Phase voltage input connection	Secondary injection of VT rated phase-to-neutral voltage Uns/√3	VT primary rated phase-to-neutral voltage Unp/√3	V1 = ...	☐
			V2 = ...	
			V3 = ...	
Residual voltage value obtained by 3 phase VTs	Secondary injection of VT rated phase-to-neutral voltage Uns/√3	VT primary rated phase-to-neutral voltage Unp/√3	V0 = ...	☐
Residual voltage input connection	**Secondary injection of voltage Uns/√3**	**Residual voltage** **= Unp/√3 (if Uns/√3 VT)** **= Unp (if Uns/3 VT)**	V0 = ...	☐

Tests performed on: ..... **By:**	**Signatures**

Comments:

.....

.....

7

Maintenance

Sepam has a large number of self-tests that are carried out in the base unit and in additional modules.
The purpose of the self-tests is:
■ To detect failures that can lead to nuisance tripping or the failure to trip when a fault occurs
■ To put Sepam in the fail-safe position to avoid user errors
■ To notify the operator that a maintenance operation is required.
The "Sepam Diagnosis" screen of the SFT2841 software provides access to data on the status of the base unit and optional modules.

MT10587

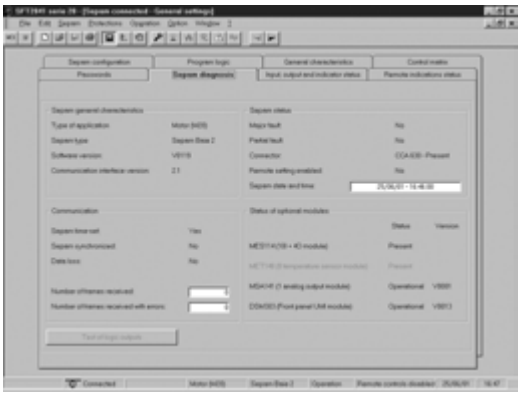

SFT2841 "Sepam Diagnosis" screen.

NOTICE

HAZARD OF DAMAGE TO SEPAM
■ Do not open the Sepam base unit.
■ Do not attempt to repair any components in the Sepam range, either in the base unit or an accessory.

Failure to follow these instructions can result in equipment damage.

Shutdown of the base unit in fail-safe position

The base unit goes into the fail-safe position in the following conditions:
■ Detection of an internal failure by the self-tests
■ Sensor interface connector missing (CCA630, CCA634, CCA670 or CCT640 according to the type of application)
■ No connection of one of the 3 LPCT sensors to the CCA670 (connectors L1, L2, L3)
■ MES module configured but missing.
See “List of self-tests which place Sepam in the fail-safe position” page 95.

The fail-safe position is conveyed by:
■ ON LED on
■ LED on the base unit steadily on
■ O4 "watchdog" relay in fault position
■ Output relays dropped out
■ All protection units inhibited
■ Display showing fault message

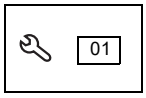

■ LED on DSM303 module (remote advanced UMI option) flashing.

Downgraded operation

The base unit is in working order (all the protection functions activated are operational) and indicates that one of the optional modules such as DSM303, MET148-2 or MSA141 is faulty or else that a module is configured but not connected.
See “List of self-tests which do not place Sepam in the fail-safe position” page 95.

According to the model, this operating mode is conveyed by:
■ Sepam with integrated advanced UMI (UD base):
□ ON LED on
□ LED on the base unit flashing, including when the display is out of order (off)
□ LED on the MET or MSA module faulty, steadily on.
The display shows a partial fault message and indicates the type of fault by a code:
□ code 1: inter-module link fault
□ code 3: MET module unavailable
□ code 4: MSA module unavailable.
■ Sepam with remote advanced UMI, UX base + DSM303:
□ ON LED on
□ LED on the base unit flashing
□ LED on the MET or MSA module faulty, steadily on
□ the display indicates the type of fault by a code (same as above).
Special case of faulty DSM303:
□ ON LED on
□ LED on the base unit flashing
□ LED on DSM303 steadily on
□ display off.
This Sepam operating mode is also transmitted via the communication link.

RTD fault

Each temperature monitoring function, when activated, detects whether the temperature sensor associated with the MET148-2 module is short-circuited or disconnected.
When this is the case, the alarm message "RTD FAULT" is generated.
Since this alarm is common to all 8 functions, the identification of the faulty sensor or sensors is obtained by looking up the measured values:
■ Measurement displayed "****" if the sensor is short-circuited
(T < -35°C or T < -31°F)
■ Measurement displayed "-****" if the sensor is disconnected
(T > +205°C or T > +401°F).

Replacement and repair

When Sepam or a module is considered to be faulty, have it replaced by a new product or module, since the components cannot be repaired.

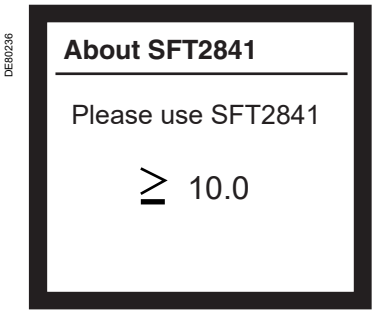

SFT2841 compatible version screen.

DANGER

HAZARD OF ELECTRIC SHOCK, ELECTRIC ARC OR BURNS

- Only qualified personnel should maintain this equipment. Such work should be performed only after reading this entire set of instructions.
- NEVER work alone.
- Obey all existing safety instructions when commissioning and maintaining high-voltage equipment.
- Beware of potential hazards and wear personal protective equipment.

Failure to follow these instructions will result in death or serious injury.

Compatibility of Sepam version/SFT2841 version

The About SFT2841 screen indicates the minimum version of SFT2841 that is compatible with the Sepam being used.
To display this screen on the Sepam UMI, press the key several times to bring up the SFT2841 compatible version screen.
Check that the SFT2841 software version used is higher than or the same as that indicated on the Sepam screen.
If the SFT2841 software version is lower than the minimum version compatible with the Sepam being used, the SFT2841 software cannot be connected to Sepam and the SFT2841 software displays the following error message: SFT2841 software version incompatible with the connected device.

Preventive maintenance

General

The logic inputs and outputs and the analog inputs are the parts of Sepam least covered by the self-tests. (See “List of self-tests which place Sepam in the fail-safe position” page 95).
They should be tested during a maintenance operation.
The recommended interval between preventive maintenance operations is 5 years (1).

Maintenance tests

To perform maintenance on Sepam, see section “Commissioning: principles and method” page 215. Carry out all the recommended commissioning tests according to the type of Sepam to be tested.
First test all the logic inputs and outputs involved in tripping the circuit breaker.
A test of the complete chain including the circuit breaker is also recommended.

(1) For more details about the maintenance period, see “Precautions” page 137.

Firmware modifications

Firmware evolutions

The table below describes the firmware version history of the Sepam base. Only the main fimware versions are described here.
The following information is provided for each firmware version:
- release date,
- compatible base version(s),
- serial number range of compatible Sepam bases,
- new features added to the Sepam base.

The base version represents the hardware version of the Sepam base.

Firmware version	Firmware version release date	Compatible base	Base serial number	New features
V9947	October 1999	Base 1	9948001 to 9951000	First version
V9951	December 1999	Base 1	9951001 to 0015000	Possibility to inhibit disturbance recording
V0015	April 2000	Base 1	0015001 to 0044017	■ New applications added: M20 (motor), T20 (transformer), B20 (busbar) ■ The display language of the Sepam is fully customizable.
V0040	November 2000	Base 1	0044018 to 0247152	■ New applications added: B21and B22 (busbar) ■ Possibility to reset alarms from the front panel ■ The minimum threshold for the protection functions ANSI 50 and ANSI 51 can be set to 0.1 In instead of 0.3 In as in previous version.
V0247	November 2002	Base 1, Base 2	0247153 to 0331000	■ The minimum displayed RMS value has been decreased from 8 % to 2 %. Accuracy characteristics remain unchanged in the range 0.1 to 1.5 In. ■ For the application T20 or M20 equipped with MET148 or MET148-2, the message "sensor faulty" caused by a power supply switch-off is cleared automatically when the supply power returns.
V0322	July 2003	Base 1, Base 2	0331001 to 0501000	■ ANSI 66 protection (starts per hour) improvement ■ The identification of the Sepam type and version through Modbus is now possible.
V0444	January 2005	Base 1, Base 2	0501001 to 0528000	■ Time and date can now be set from the advanced UMI or remote advanced UMI of the relay. The way procedure is the same as for Sepam series 40. ■ The phase tripping current Itrip can now be read down to 0.08 In, in order to ensure the correct recording of this current with minimum setting of 51 protection (0.1 In). The previous minimum value for Itrip was 0.1 In.
V0526	July 2005	Base 1, Base 2, Base 3	0528001 to 0623000	■ Compatibility with the ACE969 communication interface (Modbus, IEC 60870-5-103 or DNP3.0 protocols) ■ The time delay of the trip circuit supervision function has been increased from 200 ms to 2 s.
V0608	N/A (1)	Base 1, Base 2, Base 3	(1)	■ New applications added: S23 and T23 ■ It is now possible to measure I2 with 2TCs. Warning: With 2 TCs, I2 can be measured but this value is not taken into account by the protection functions. ■ Communication Protocol DNP3: It is now possible to set the threshold that starts the event transmission. ■ Possibility to inhibit the protection function 51N by using the input I23.
V0621	June 2006	Base 1, Base 2, Base 3	0623001 to 07230000	
V0709	June 2007	Base 1, Base 2, Base 3, Base 4	07230001 to 07370000	■ Optimization of the 49RMS and 48/51LR protections: accuracy of tripping time on 49RMS and locked time before rotor restarts on 48/51LR. ■ Creation of the TS Info TRIP with linked event. ■ Alarm clearing on factory setting actions
V0736	September 2007	Base 1, Base 2, Base 3, Base 4	07370001 to 09280000	Io channel self test optimization on compensated neutral system
V0838	July 2009	Base 1, Base 2, Base 3, Base 4, Base 5	09280001 to 09460000	
V0938	November 2009	Base 1, Base 2, Base 3, Base 4, Base 5	09460001 to 11400000	■ 2 new applications (S24,T24) added based on the S23 and T23 applications added with the following functions: □ Cold load pick-up I & Io, □ H2 restraint functions on ANSI 50/51(cable arcing fault). ■ The following functions have been added on the B21 and B22 applications: □ Under voltage function (ANSI 27/27S) setting point, □ Positive sequence under voltage function (ANSI 27D) setting point, □ Rated secondary voltage Uns setting point. ■ The following functions have been added on all applications: □ H2 restraint function on ANSI 50/51(cable arcing fault, except B21 and B22 applications), □ New H2 function on ANSI 50N/51N (except B21 and B22 applications), □ Monitoring Modbus communication.
V1114	October 2011	Base 1, Base 2, Base 3, Base 4, Base 5	11400001 until now	Correction of 2 minor problems
V1115	May 2025	Base 1, Base 2, Base 3, Base 4, Base 5	To be defined	New C21 application for managing self-tests after long-term storage.

***(1)** Revision not released in mass production, only for site upgrade purpose.*

General upward compatibility

The following table presents the compatibility of a firmware version range with the different hardware bases.

Firmware version	Hardware evolutions				
	Base 1	Base 2	Base 3 (1)	Base 4 (1)	Base 5 (1)
V9947 to V0215	□	-	-	-	-
V0241 to V0444	□	□	-	-	-
V0510	□	□	□	-	-
V0526 to V0621	□	□	□	-	-
V0709 to V0827	□	□	□	□	-
V0838	□	□	□	□	□
V0938 to V1115	■	■	■	■	■

■ *Compatible with all features*
□ *Compatible but with limited features*
\- *Not compatible*
(1) The backup of the date and time on power-off is only available since the serial number 0528001.

Notes

ART.08552 © 2025 Schneider Electric - All rights reserved

Schneider Electric Industries SAS

35, rue Joseph Monier
CS 30323
F - 92506 Rueil-Malmaison Cedex
RCS Nanterre 954 503 439
Share capital 896 313 776 €
www.schneider-electric.com

As standards, specifications and designs change from time to time, please ask for confirmation of the information given in this publication.

Printed on recycled paper.

Production: Schneider Electric
Publication: Schneider Electric
Printed:

PCRED301005EN/14

06/2025