# Product data sheet
## Characteristics

# 199X-13
## Power Relay, DPST-NO, open cover type, screw terminal, 40A, 24V DC, 2 C/O

## Main

| | |
|---|---|
| Product Type | Power relay |
| Switch Function | DPDT |
| Contact Composition | 2 C/O |
| Cover Type | Open cover |

## Complementary

| | |
|---|---|
| Input Current | 40 A |
| Contacts Material | Silver alloy contacts |
| Rated Operational Voltage | 6...600 V AC 50-60 Hz<br>6...250 V DC |
| Minimum Switching Current | 1000 mA 5 V AC/DC |
| Coil Resistance | 290 Ohm |
| Input voltage | 24 V DC |
| Drop-out Voltage Threshold | >= 0.1 Uc AC/DC |
| Rated Operational Current | 40 A at 300 V AC (on resistive load) conforming to UL<br>40 A at 28 V DC (on resistive load) conforming to UL<br>5 A at 480 V AC (on resistive load) conforming to UL<br>5 A at 600 V AC (on resistive load) conforming to UL<br>15 A at 120 V AC (tungsten filament) conforming to UL |
| Power consumption in W | 4 W DC |
| Power consumption in VA | 10 VA AC |
| Voltage Range | 0.85...1.1 Un AC/DC |
| Maximum Switching Voltage | 600 V DC |
| Motor Power HP | 2 hp 120...600 V AC 50/60 Hz |
| Connections Terminals | Screw terminal |
| Wire Range | AWG 14 |
| Terminal Tightening Torque | 10.62…15.05 lbf.in (1.2…1.7 N.m) |

## Environment

| | |
|---|---|
| Ambient Air Temperature for Operation | -67…131 °F (-55…55 °C) |
| Ambient Air Temperature for Storage | -67…212 °F (-55…100 °C) |
| Product Certifications | UL Listed<br>CSA<br>CE |
| Electrical Durability | 100000 cycles resistive DC load |
| Dielectric Strength | 2200 V AC between coil and contact<br>2200 V AC between poles<br>1500 V AC between open contacts |

The information provided in this documentation contains general descriptions and/or technical characteristics of the performance of the products contained herein.
This documentation is not intended as a substitute for and is not to be used for determining suitability or reliability of these products for specific user applications.
It is the duty of any such user or integrator to perform the appropriate and complete risk analysis, evaluation and testing of the products with respect to the relevant specific application or use thereof.
Neither Schneider Electric Industries SAS nor any of its affiliates or subsidiaries shall be responsible or liable for misuse of the information contained herein.

## Ordering and shipping details

| | |
|---|---|
| Category | 21127-ZELIO ICE CUBE RELAYS |
| Discount Schedule | CP2 |
| GTIN | 3606480276057 |
| Returnability | No |
| Country of origin | CN |

## Packing Units

| | |
|---|---|
| Unit Type of Package 1 | PCE |
| Number of Units in Package 1 | 1 |
| Package 1 Height | 2.30 in (5.842 cm) |
| Package 1 Width | 2.60 in (6.604 cm) |
| Package 1 Length | 3.20 in (8.128 cm) |
| Package 1 Weight | 9.28 oz (263.086 g) |

## Offer Sustainability

| | |
|---|---|
| Sustainable offer status | Green Premium product |
| California proposition 65 | WARNING: This product can expose you to chemicals including: Nickel compounds, which is known to the State of California to cause cancer, and Di-isodecyl phthalate (DIDP), which is known to the State of California to cause birth defects or other reproductive harm. For more information go to www.P65Warnings.ca.gov |
| REACh Regulation | REACh Declaration |
| REACh free of SVHC | Yes |
| EU RoHS Directive | Pro-active compliance (Product out of EU RoHS legal scope) EU RoHS Declaration |
| Toxic heavy metal free | Yes |
| Mercury free | Yes |
| China RoHS Regulation | China RoHS Declaration |
| RoHS exemption information | Yes |
| Environmental Disclosure | Product Environmental Profile |
| WEEE | The product must be disposed on European Union markets following specific waste collection and never end up in rubbish bins. |

199X-13

## Approximate Dimensions

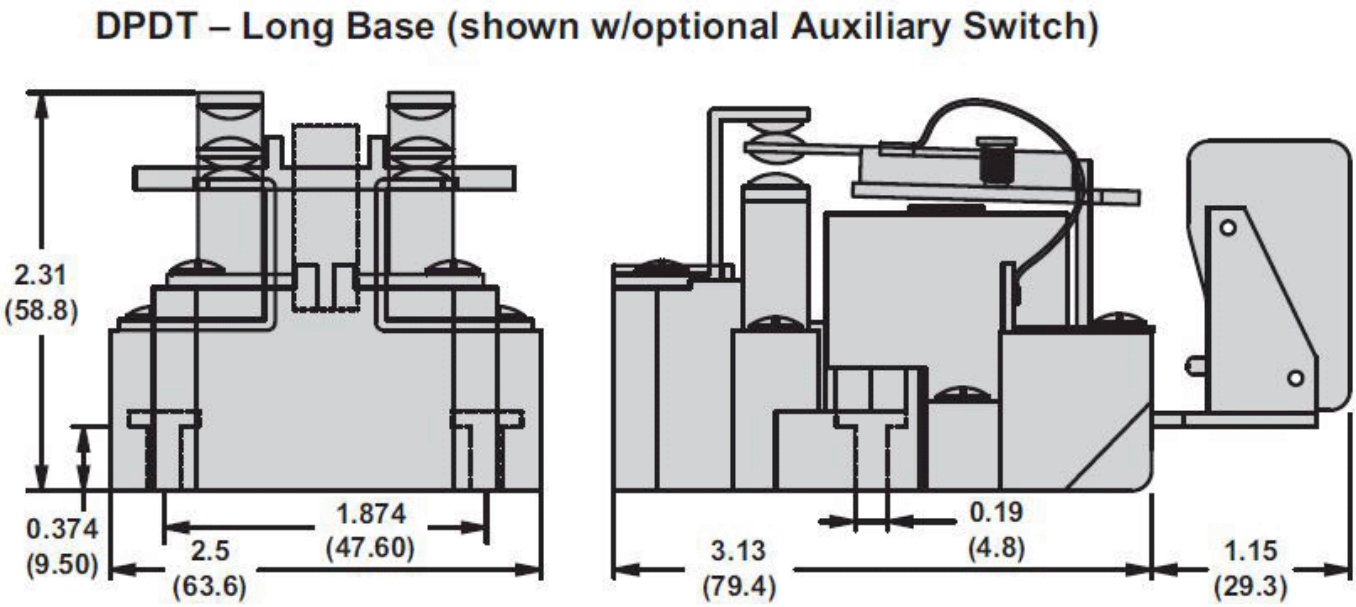
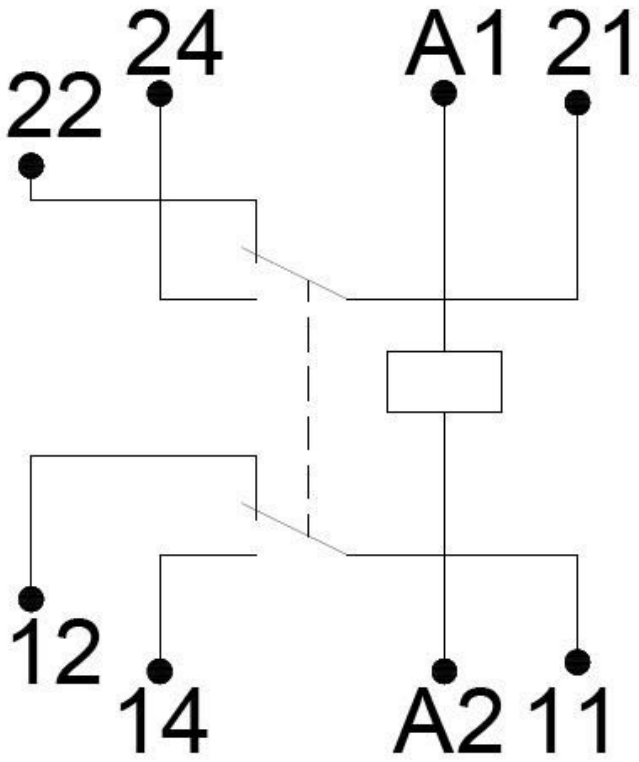
## Connections and Wiring Diagrams