Product data sheet
Characteristics

199AX-13
Power relay, SE Relays, DPDT, 40A, 24 VAC, open type, heavy duty

Main

Product Type	Power relay
Switch Function	DPDT
Contact Composition	2 C/O
Cover Type	Open cover

Complementary

Input Current	40 A
Contacts Material	Silver alloy contacts
Rated Operational Voltage	6...600 V AC 50-60 Hz 6...250 V DC
Minimum Switching Current	1000 mA 5 V AC/DC
Coil Resistance	12 Ohm
Input voltage	24 V AC
Drop-out Voltage Threshold	>= 0.1 Uc AC/DC
Rated Operational Current	40 A at 300 V AC (on resistive load) conforming to UL 40 A at 28 V DC (on resistive load) conforming to UL 5 A at 480 V AC (on resistive load) conforming to UL 5 A at 600 V AC (on resistive load) conforming to UL 15 A at 120 V AC (tungsten filament) conforming to UL
Power consumption in W	4 W DC
Power consumption in VA	10 VA AC
Voltage Range	0.85...1.1 Un AC/DC
Maximum Switching Voltage	600 V AC
Motor Power HP	2 hp 120...600 V AC 50/60 Hz
Connections Terminals	Screw terminal
Wire Range	AWG 14
Terminal Tightening Torque	10.62…15.05 lbf.in (1.2…1.7 N.m)

Environment

Ambient Air Temperature for Operation	-67…131 °F (-55…55 °C)
Ambient Air Temperature for Storage	-67…212 °F (-55…100 °C)
Product Certifications	UL Listed CSA CE
Electrical Durability	50000 cycles resistive
Dielectric Strength	2200 V AC between coil and contact 2200 V AC between poles 1500 V AC between open contacts

The information provided in this documentation contains general descriptions and/or technical characteristics of the performance of the products contained herein.
This documentation is not intended as a substitute for and is not to be used for determining suitability or reliability of these products for specific user applications.
It is the duty of any such user or integrator to perform the appropriate and complete risk analysis, evaluation and testing of the products with respect to the relevant specific application or use thereof.
Neither Schneider Electric Industries SAS nor any of its affiliates or subsidiaries shall be responsible or liable for misuse of the information contained herein.

Ordering and shipping details

Category	21127-ZELIO ICE CUBE RELAYS
Discount Schedule	CP2
GTIN	3606480275791
Returnability	Yes
Country of origin	CN

Packing Units

Unit Type of Package 1	PCE
Number of Units in Package 1	1
Package 1 Height	2.50 in (6.36 cm)
Package 1 Width	3.13 in (7.94 cm)
Package 1 Length	2.31 in (5.88 cm)
Package 1 Weight	10.41 oz (295 g)

Offer Sustainability

Sustainable offer status	Green Premium product
California proposition 65	WARNING: This product can expose you to chemicals including: Nickel compounds, which is known to the State of California to cause cancer, and Di-isodecyl phthalate (DIDP), which is known to the State of California to cause birth defects or other reproductive harm. For more information go to www.P65Warnings.ca.gov
REACh Regulation	REACh Declaration
REACh free of SVHC	Yes
EU RoHS Directive	Pro-active compliance (Product out of EU RoHS legal scope) EU RoHS Declaration
Toxic heavy metal free	Yes
Mercury free	Yes
China RoHS Regulation	China RoHS Declaration
RoHS exemption information	Yes
Environmental Disclosure	Product Environmental Profile
WEEE	The product must be disposed on European Union markets following specific waste collection and never end up in rubbish bins.

199AX-13

Approximate Dimensions

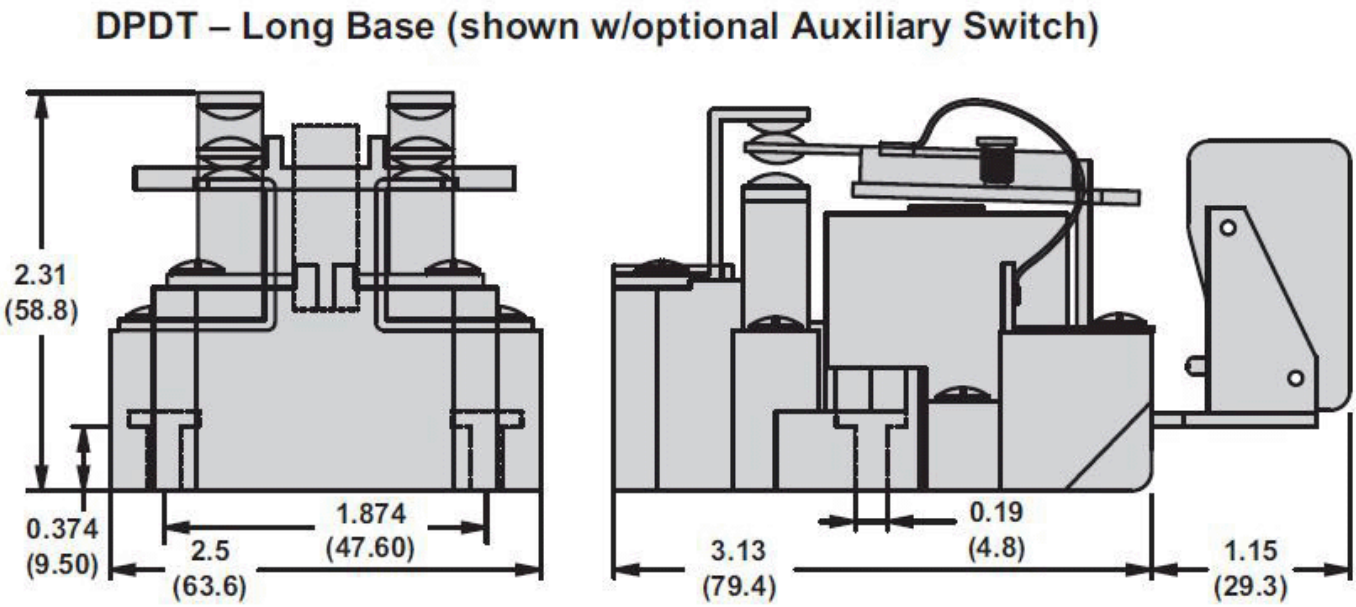
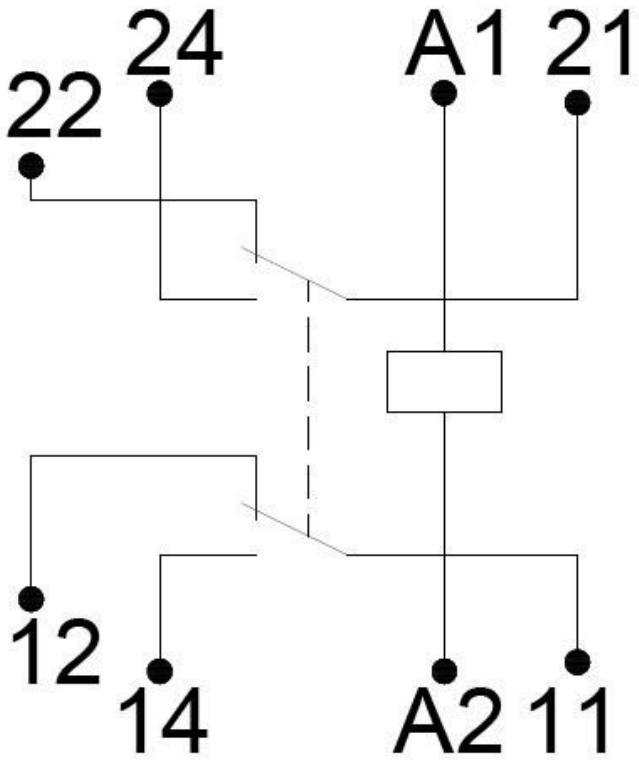
Connections and Wiring Diagrams