Quantum using EcoStruxure™ Control Expert

140 ERT 854 20 Time Stamp Module User Manual

(Original Document)

12/2018

S1B76798.07

www.schneider-electric.com

The information provided in this documentation contains general descriptions and/or technical characteristics of the performance of the products contained herein. This documentation is not intended as a substitute for and is not to be used for determining suitability or reliability of these products for specific user applications. It is the duty of any such user or integrator to perform the appropriate and complete risk analysis, evaluation and testing of the products with respect to the relevant specific application or use thereof. Neither Schneider Electric nor any of its affiliates or subsidiaries shall be responsible or liable for misuse of the information contained herein. If you have any suggestions for improvements or amendments or have found errors in this publication, please notify us.

You agree not to reproduce, other than for your own personal, noncommercial use, all or part of this document on any medium whatsoever without permission of Schneider Electric, given in writing. You also agree not to establish any hypertext links to this document or its content. Schneider Electric does not grant any right or license for the personal and noncommercial use of the document or its content, except for a non-exclusive license to consult it on an "as is" basis, at your own risk. All other rights are reserved.

All pertinent state, regional, and local safety regulations must be observed when installing and using this product. For reasons of safety and to help ensure compliance with documented system data, only the manufacturer should perform repairs to components.

When devices are used for applications with technical safety requirements, the relevant instructions must be followed.

Failure to use Schneider Electric software or approved software with our hardware products may result in injury, harm, or improper operating results.

Failure to observe this information can result in injury or equipment damage.

© 2018 Schneider Electric. All rights reserved.

Table of Contents

Safety Information 7
About the Book 11
Part I Function Overview 13
Chapter 1 Introduction 15
Module Overview 15
Chapter 2 User Functions and Services 17
Input Processing - Registration and Filtering 18
Registration 19
Filtering 20
Input Data Processing 22
Status Inputs 25
Chapter 3 Time Synchronization 27
Time Synchronization with Standard Time 27
Chapter 4 Typical Application Areas 31
Typical areas of application 31
Part II Module Description 33
Chapter 5 Module Description 35
Overview 36
Features and Functions 38
Planning 39
Module Cabling 40
Diagnosis 45
Technical data 46
Part III Configuration 49
Chapter 6 Quantum Addressing Modes 51
Flat Addressing—800 Series I/O Modules 52
Topological Addressing—800 Series I/O Modules with Control Expert 53
Addressing Example 54
Discrete I/O Bit Numbering 55
Addressing 56
Chapter 7 The Parameter Configuration Window 57
The Parameter Configuration Window 57

Chapter 8 Startup the 140 ERT 854 20 63
140 ERT 854 20 Module and Resource Limitations 64
DCF Receiver 65
The GPS Receiver 66
Behavior when starting/restarting and the data storage 67
Check List 69
Chapter 9 Integration in the Application Program 71
Integrating Intelligent I/O Modules 72
Configuration Section 73
Processing Section 74
Chapter 10 EFBs for the 140 ERT 854 20 75
10.1 DROP: Configuring an I/O station rack 76
Description 76
10.2 QUANTUM: Configuring a main rack 79
Description 79
10.3 ERT_854_20: Data transfer EFB 82
Description 83
Function mode 87
EFB configuration 89
Data Flow 90
Other Functions 95
Use of the DPM_Time structure for the synchronization of the internal ERT clock 96
Using the ERT >EFB Time Data Flow 97
10.4 NI_DROP: Configuring an I/O station rack 98
Description 98
10.5 NI_QUANTUM: Configuring a main rack 101
Description 101
10.6 NI_ERT_854_20: Data transfer EFB 104
Description 105
Function Mode 110
EFB Configuration 112
Data Flow 113

Part IV TSXNTP100 Supporting Module. 117
Chapter 11 TSXNTP100 Supporting Module 119
Introduction 120
Module Cabling 121
Technical Data. 122
Time Synchronization 123
Configuration Window 124
Index 125

Safety Information

Important Information

NOTICE

Read these instructions carefully, and look at the equipment to become familiar with the device before trying to install, operate, service, or maintain it. The following special messages may appear throughout this documentation or on the equipment to warn of potential hazards or to call attention to information that clarifies or simplifies a procedure.

The addition of this symbol to a “Danger” or “Warning” safety label indicates that an electrical hazard exists which will result in personal injury if the instructions are not followed.

This is the safety alert symbol. It is used to alert you to potential personal injury hazards. Obey all safety messages that follow this symbol to avoid possible injury or death.

DANGER

DANGER indicates a hazardous situation which, if not avoided, **will result in** death or serious injury.

WARNING

WARNING indicates a hazardous situation which, if not avoided, **could result in** death or serious injury.

CAUTION

CAUTION indicates a hazardous situation which, if not avoided, **could result** in minor or moderate injury.

NOTICE

NOTICE is used to address practices not related to physical injury.

PLEASE NOTE

Electrical equipment should be installed, operated, serviced, and maintained only by qualified personnel. No responsibility is assumed by Schneider Electric for any consequences arising out of the use of this material.

A qualified person is one who has skills and knowledge related to the construction and operation of electrical equipment and its installation, and has received safety training to recognize and avoid the hazards involved.

BEFORE YOU BEGIN

Do not use this product on machinery lacking effective point-of-operation guarding. Lack of effective point-of-operation guarding on a machine can result in serious injury to the operator of that machine.

⚠ WARNING

UNGUARDED EQUIPMENT

- Do not use this software and related automation equipment on equipment which does not have point-of-operation protection.
- Do not reach into machinery during operation.

Failure to follow these instructions can result in death, serious injury, or equipment damage.

This automation equipment and related software is used to control a variety of industrial processes. The type or model of automation equipment suitable for each application will vary depending on factors such as the control function required, degree of protection required, production methods, unusual conditions, government regulations, etc. In some applications, more than one processor may be required, as when backup redundancy is needed.

Only you, the user, machine builder or system integrator can be aware of all the conditions and factors present during setup, operation, and maintenance of the machine and, therefore, can determine the automation equipment and the related safeties and interlocks which can be properly used. When selecting automation and control equipment and related software for a particular application, you should refer to the applicable local and national standards and regulations. The National Safety Council's Accident Prevention Manual (nationally recognized in the United States of America) also provides much useful information.

In some applications, such as packaging machinery, additional operator protection such as point-of-operation guarding must be provided. This is necessary if the operator's hands and other parts of the body are free to enter the pinch points or other hazardous areas and serious injury can occur. Software products alone cannot protect an operator from injury. For this reason the software cannot be substituted for or take the place of point-of-operation protection.

Ensure that appropriate safeties and mechanical/electrical interlocks related to point-of-operation protection have been installed and are operational before placing the equipment into service. All interlocks and safeties related to point-of-operation protection must be coordinated with the related automation equipment and software programming.

NOTE: Coordination of safeties and mechanical/electrical interlocks for point-of-operation protection is outside the scope of the Function Block Library, System User Guide, or other implementation referenced in this documentation.

START-UP AND TEST

Before using electrical control and automation equipment for regular operation after installation, the system should be given a start-up test by qualified personnel to verify correct operation of the equipment. It is important that arrangements for such a check be made and that enough time is allowed to perform complete and satisfactory testing.

⚠ WARNING

EQUIPMENT OPERATION HAZARD

- Verify that all installation and set up procedures have been completed.
- Before operational tests are performed, remove all blocks or other temporary holding means used for shipment from all component devices.
- Remove tools, meters, and debris from equipment.

Failure to follow these instructions can result in death, serious injury, or equipment damage.

Follow all start-up tests recommended in the equipment documentation. Store all equipment documentation for future references.

Software testing must be done in both simulated and real environments.

Verify that the completed system is free from all short circuits and temporary grounds that are not installed according to local regulations (according to the National Electrical Code in the U.S.A, for instance). If high-potential voltage testing is necessary, follow recommendations in equipment documentation to prevent accidental equipment damage.

Before energizing equipment:

- Remove tools, meters, and debris from equipment.
- Close the equipment enclosure door.
- Remove all temporary grounds from incoming power lines.
- Perform all start-up tests recommended by the manufacturer.

OPERATION AND ADJUSTMENTS

The following precautions are from the NEMA Standards Publication ICS 7.1-1995 (English version prevails):

- Regardless of the care exercised in the design and manufacture of equipment or in the selection and ratings of components, there are hazards that can be encountered if such equipment is improperly operated.
- It is sometimes possible to misadjust the equipment and thus produce unsatisfactory or unsafe operation. Always use the manufacturer's instructions as a guide for functional adjustments. Personnel who have access to these adjustments should be familiar with the equipment manufacturer's instructions and the machinery used with the electrical equipment.
- Only those operational adjustments actually required by the operator should be accessible to the operator. Access to other controls should be restricted to prevent unauthorized changes in operating characteristics.

About the Book

At a Glance

Document Scope

This document describes the functionality and performance scope of the Time Stamp Module 140 ERT 854 20. It should show you how to provide your Quantum with time stamped data.

Validity Note

This document is valid for EcoStruxure™ Control Expert 14.0 or later.

The technical characteristics of the devices described in the present document also appear online. To access the information online:

Step	Action
1	Go to the Schneider Electric home page *www.schneider-electric.com*.
2	In the **Search** box type the reference of a product or the name of a product range. ● Do not include blank spaces in the reference or product range. ● To get information on grouping similar modules, use asterisks (*).
3	If you entered a reference, go to the **Product Datasheets** search results and click on the reference that interests you. If you entered the name of a product range, go to the **Product Ranges** search results and click on the product range that interests you.
4	If more than one reference appears in the **Products** search results, click on the reference that interests you.
5	Depending on the size of your screen, you may need to scroll down to see the data sheet.
6	To save or print a data sheet as a .pdf file, click **Download XXX product datasheet**.

The characteristics that are presented in the present document should be the same as those characteristics that appear online. In line with our policy of constant improvement, we may revise content over time to improve clarity and accuracy. If you see a difference between the document and online information, use the online information as your reference.

Related Documents

Title of documentation	Reference number
EcoStruxure™ Control Expert, Program Languages and Structure, Reference Manual	35006144 (English), 35006145 (French), 35006146 (German), 35013361 (Italian), 35006147 (Spanish), 35013362 (Chinese)
EcoStruxure™ Control Expert, I/O Management, Block Library	33002531 (English), 33002532 (French), 33002533 (German), 33003684 (Italian), 33002534 (Spanish), 33003685 (Chinese)

You can download these technical publications and other technical information from our website at *www.schneider-electric.com/en/download*.

Part I
Function Overview

Overview

The first part of the manual for the intelligent input module 140 ERT 854 20 gives an overview of the structure of the module, the functionality and shows typical applications.

What Is in This Part?

This part contains the following chapters:

Chapter	Chapter Name	Page
1	Introduction	15
2	User Functions and Services	17
3	Time Synchronization	27
4	Typical Application Areas	31

Chapter 1
Introduction

Module Overview

Overview

The `140 ERT 854 20` is an intelligent 32 point input module for Quantum that allows configuration of inputs and evaluates the input signal status every 1 millisecond. On a local rack or EIO drop, there is no quantity limitation. Up to 8 ERTs can be installed on a S908 remote drop.

NOTE: To use the `140 ERT 854 20` module under Unity Pro V4.1 or Unity Pro V5.0 please install the hotfix `Q_ERT85420`.

Unity Pro is the former name of Control Expert for version 13.1 or earlier.

The inputs

The 32 inputs are designed for input voltages of 24...125 Vdc and are distributed in two independent groups. Each group is supplied with a separate external reference voltage (typically 24, 48, 60 or 125 Vdc), to influence the threshold limit and minimum current consumption. The module status Ready, Active and Error as well as the input status (status of the terminals) are clearly displayed by the status LEDs on the module.

NOTE: The reference input voltage must be identical to the input voltage level.

140 ERT 854 20 firmware processes inputs in 4 separate configurable function blocks with 8 inputs which support the following functions that can be selected:

- Binary inputs: Input values are sent cyclically to the PLC.
- Event inputs: Time registered event logging for 1, 2 or 8 processed inputs, with 5 byte time register, integrated FIFO buffer for at least 4096 events and acknowledging PLC transferred by you.
- Counter inputs: 32 bit addition of processed events up to 500 Hz that are transferred cyclically to the PLC.

Parameters can be set for processing individual inputs (disabled, inverted, and with debounce filter). A configurable chatter filter can be activated for the event and counter inputs and event edge monitoring carried out.

Time Synchronization

The module clock requires a time synchronization signal. It provides 24 Vdc input for DCF77 and 5 Vdc input for IRIG-B with potential isolation for the following standard time receivers:

- DCF 77E (long wave reception only in Europe) with DCF77 format output
- GPS receiver with DCF77 or IRIG-B time format output

The ERT internal software clock can alternatively be created by the application program, or be free running.

Validity Reserve

A validity reserve can determine how long the module clock can continue running without external synchronization. For further information, refer to *Time Synchronization with Standard Time* *(see page 27)*.

Power Reserve

The ERT data evaluated can be buffered in the event of power loss.

Non-Interfering

The 140 ERT 854 20 module is a non-interfering module. For further information, refer to *Modicon Quantum, Quantum Safety PLC, Safety Reference Manual*.

When using the 140 ERT 854 20 module in a safety configuration:

- Time synchronization of the module with CPU using DPM_Time structure is not possible and,
- Counting feature is not available.

Chapter 2
User Functions and Services

Overview

The 32 inputs of the 140 ERT 854 20 module can be individually preprocessed and transferred to the PLC as binary value, counter value or event. The following chapter describes the functions and services available.

What Is in This Chapter?

This chapter contains the following topics:

Topic	Page
Input Processing - Registration and Filtering	18
Registration	19
Filtering	20
Input Data Processing	22
Status Inputs	25

Input Processing - Registration and Filtering

Overview

The input signals connected to the 140 ERT 854 20 go through a multistage preprocessing stage before they are made available to the user program as binary, counter values or events. The preprocessing can be set with parameters for each individual input.

Signal Processing Sequence

The processing of the input signals is carried out according to the parameters set. Parametering is carried out via a Parameter Configuration Window *(see page 57)*.

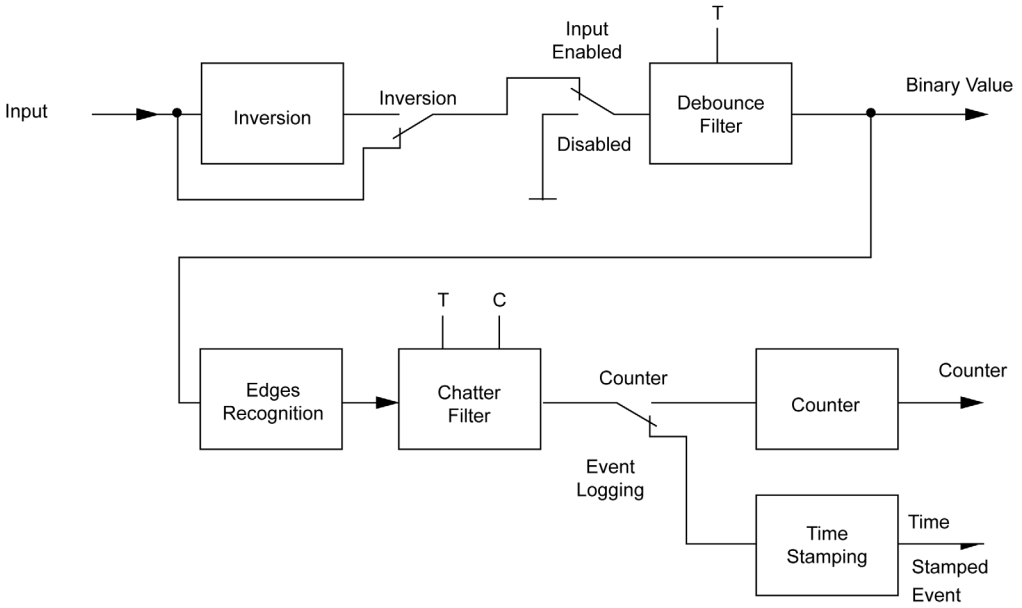

Registration

Overview

The processing of the individual inputs is completely configurable (disabled, inverted and with debounce time). The events and counter inputs can also have a configurable chatter filter activated and an edge event evaluation.

Disabling

A disabled input shows the value "0" independent for its input state.

Inverting

The input polarity is inverted before further processing. If this is active, the opposite to the input signal status shown on the status LEDs is passed on for further processing.

Edge Recognition

Selects the edge transitions which should be used for active events and counter inputs. "Both Edges" processes rising and falling edges. Otherwise only a signal edge is processed: rising/falling, either with or without active inversion.

Filtering

Overview

The configurable filtering is done in 2 stages: debounce and dechattering.

⚠ CAUTION

UNEXPECTED APPLICATION BEHAVIOR - INCORRECT INTERPRETATION OF INPUT DATA

Filters are used to suppress the input recognition in a defined way. Filtering should only be used in a suitable way to prevent too much or undesired suppression of input data.

Failure to follow these instructions can result in injury or equipment damage.

Debounce

Debouncing can be used on all input functions and so that input state changes are not processed too quickly, for example, those caused by contact bouncing. Signal changes are ignored depending on the filter type and the preset time. The value range for the filter time is 0...256 ms; the value 0 deactivates the debounce filter. The selection of the debounce filter type "stable signal" or "integrating" affects all 8 inputs per function block.

- "Stable Signal" Filtering: A signal change is only registered if the polarity change stays stable for longer than the filter time (each new change resets the filter time).

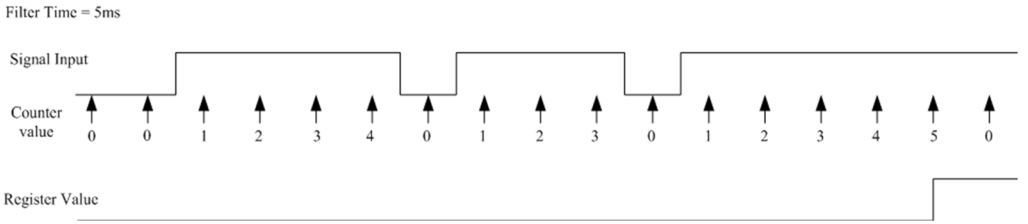

- "Integrating" Filtering: A signal change is only registered if the time integral of the input signal reaches the programmed filter time taking any polarity change into account.

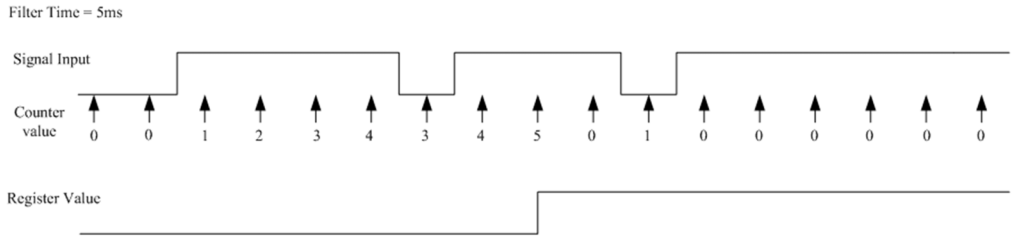

NOTE:

1. Debounce time greater than or equal to 1 ms is recommended to provide enough immunity against electromagnetic disturbances. This means that input signal states greater than or equal to 2 ms and events up to 250 Hz can be processed.
2. Typically, the hardware filter present in the module suppresses noise with frequency higher than 1 KHz.
3. If debounce time is set to 0, then Control Expert gets the possibility of 2 events with the same time stamps (happened within 1 ms) for 1 channel.

Dechattering

Dechattering can only be used for event and counter inputs. It limits the number of events to a configurable value during a configurable time period, so that multiple events are not registered for the same input, that is disturbance influences due to slowly changing inputs (because the hysteresis is possibly set too small). The chatter counter is configurable for each individual input, the chatter time for each input pair. The selection of "dechattering" on the parameter screen activates the chatter filter for all 8 inputs per function block. The chatter filtering for individual inputs can be disabled by selecting the value of 0 as chatter count value. A "Chatter Filter Active" bit within the "status" output word (Bit -7 - DC) which is returned from the data transfer EFB. For further information, refer to data transfer EFBs *(see page 75)* signals that at least one "Chatter" input is being filtered. The bit is reset as soon as the chatter time of the last active filtered input has run out.

- Chatter time: The time period in which the chatter count limit has an effect. Value range from 1...255 * 100 milliseconds = 0.1...25.5 seconds.
- Chatter count: The maximum number of registered events which are allowed to be passed on within the chatter time period. Value range from 1...255, the value 0 deactivates the chatter filter.

NOTE: Dechattering is a very powerful processing tool which can have undesired side effects. Its use with counter inputs is questionable. If edge recognition is performed for “both edge” then, in case of odd-numbered chatter suppression, 2 successive events with the same edge (2 rising, 2 falling) appear when transferred to the PLC.

⚠ CAUTION

UNEXPECTED APPLICATION BEHAVIOR

Do not perform odd-numbered chatter suppression in case of both edge recognition.

Failure to follow these instructions can result in injury or equipment damage.

Input Data Processing

Overview

The input signal can be used as binary inputs, counter values or for event recording depending on the parameters set in the *Parameter Configuration Window* *(see page 57)*.

Normally the input data of the 140 ERT 854 20 module is processed by the corresponding EFBs *(see page 75)*.

Binary Inputs

All inputs of the function block are transferred to the PLC after the third processing stage (that is enabling, inverting and debounce filtering) before the chatter filter and edge recognition are performed. The processed values of all 32 inputs are cyclically transferred (every PLC cycle) to the first and second input register word of the 8 word %IW register block of the ERT. The address sequence of the module inputs corresponds to standard digital input modules, that is inputs 1...16 correspond to bits 15...0. User confirmation is not necessary because the data transfer EFB must exist and be enabled. The processed values are available for all 32 inputs independent of their further processing as counter or event inputs. The input processing is executed according to the configuration, but the ERT copies the processed values from the input immediately after the third input processing stage.

NOTE: If the output array "Input" of the data transfer EFB is configured, the processed values are directly available as Bool values.

Counter Values

NOTE: This functionality is not available with the `NI_ERT_854_20` data transfer EFB when using the 140 ERT 854 20 module in a safety Quantum application.

All inputs of the function block go through all 5 input processing stages (that is enabling, inverting, debounce and chatter filtering as well as edge recognition). The count operation executes once edge recognition has been performed successfully. For edge recognition which is not set as "both edges", the configured inverting decides if rising or falling edges are counted.

NOTE: It is probably not worthwhile using inversion for the recognition of "both edges".

Counter values are 32 bit totals. The PLC receives a complete sequence (configured as: 8, 16, 24 of 32) of time consistent counter values in a multiplex procedure from the "`ERT_854_20`" transfer EFB cyclically. Refer to description of the EFBs, section *EFBs for the 140 ERT 854 20 (see page 75)*. The EFB sets the values in the configured UDINTArr32 output array "Cnt_Data", without the confirmation of the user. After the transfer of the new counter values is completed, the EFB sets the signal "New Data", a Boolean variable "ND_Count", for one PLC cycle.

NOTE: The transfer of the counter values starts with function block 1 and ends with the last function block which is configured as counter inputs. If a consecutive sequence of function blocks starting with the first block are configured as counter inputs, transfer resources are saved. Since the transfer of the counter values competes with the transfer of the recorded events, faster reaction times for both types can be achieved if an ERT module is fully configured as either a counter or an event input. Binary and status inputs have no effect on this.

Event Logging

This function allows input state changes to be registered in time order with a high resolution. The input state changes are logged with a time stamp with a high resolution. The events can later be shown in the correct sequence. The time stamping of events can be configured so that a group of 1, 2 or 8 inputs can be processed in parallel. All inputs of the function block go through all five input processing stages (that is enabling, inverting, debounce and chatter filtering as well as edge recognition). The logging (including time stamping) is done as soon as the edge reaches the edge recognition. For edge recognition which is not set as "both edges", the configured inverting decides if rising or falling edges are logged.

NOTE: Inversion is probably not sensible to use with the recognition of "both edges".

A group of inputs is logged as an event if at least one of the inputs in this group has an edge which has been recognized, such as:

- any single input (1, 2...7, 8),
- any input of an input pair (1-2, 3-4, 5-6, 7-8),
- an input of 8 bit group.

Events contain a lot of information in 8 byte block, including the processed values of all inputs in the group with the corresponding time stamp:

- Module number
- Type of input group and number of the first bit
- The current value of the inputs in the group
- Time stamp: Milliseconds
- Time stamp: Minute
- Time stamp: Hour
- Time stamp: Day of the week/Day in the month

The actual value of the inputs is stored right justified in an event structure byte. The ERT saves at least 4096 events in its battery-backed FIFO buffer. The ERT provides error bits (bit 5/6 - PF/PH) for buffer overflow/buffer half full within the "Status" output word which is returned from the data transfer EFB. Individual events are transferred in a structure to the PLC by the data transfer EFB. After processing the events, you must actively signal readiness for the receiving of new events. Refer to data transfer EFB description *(see page 75)*. If desired, the parameter "Complete time report" can be selected to provide the month and year. For this purpose, there is a special pseudo event without values which contains the complete time information with month and year. The event is marked as a "Complete time report" and precedes the "actual", time stamped event. Refer to (additional information about "Complete Time Report" in *Parameters and Default Values* *(see page 58)*.

Status Inputs

Status Word

The "Status" output word which is cyclically returned by the data transfer EFB contains the following error bits:

- D8...D0 ERT error bits
- D11...D9 reserved
- D15...D12 EFB error bits

After the transfer of the new status inputs is completed, the EFB sets the signal "New Data", a Boolean variable from "ND_Stat", for one cycle.

NOTE: ERT/EFB error messages are displayed in the Control Expert screen **Tools** → **View** with the error number and explanation.

For detailed on the error bits and error messages, refer to the:

- `ERT_854_20` data flow *(see page 93)*, or
- `NI_ERT_854_20` data flow *(see page 114)*.

Chapter 3
Time Synchronization

Time Synchronization with Standard Time

Overview

The time stamped event logging requires a precise internal clock. The ERT module uses a software clock for creating the time in millisecond intervals. This software clock is normally synchronized with the help of an external time signal (standard time receiver) in one minute intervals. It can also be synchronized via a telegram or be free running.

The incoming time signal is checked for plausibility. Runtime deviations from the software clock are corrected. The time reception takes a few minutes before the time becomes available after startup. The software clock is synchronized to this time. The module then determines the deviation from the software clock with regard to the external clock within a specific period, and offsets the deviation accordingly. This is carried out continuously during the entire runtime. After a few hours runtime (generally within 2 hours) the software clock reaches maximum precision.

If implausible or incorrect time messages are received, the software clock continues running without synchronization. The deviation gets larger during this time. If this time phase does not exceed the "Validity Reserve" specified, the clock resynchronizes when the next valid time information is received. However, if the time period is exceeded before the module receives a valid time signal, the ERT sets bit "Time Invalid" in the "Status" output word (bit 3 - TU), returned by the data transfer EFBs *(see page 75)*. All time stamps set after this are invalid (the high priority byte for millisecond information is set to FF). The bit is reset as soon as the next valid time message is received.

If the module receives no valid time messages for 10 minutes, the ERT sets the bit "Time Reference Error" in the "Status" output word (bit 2 - TE), returned by the data transfer EFBs *(see page 75)*. The bit is reset as soon as the next valid time message is received.

Synchronization

There are 2 types of synchronization available:

- Standard third party GPS receiver with DCF77 or IRIG-B time format supported
- Synchronized by the PLC using `ERT_854_20` EFB (low precision)

NOTE: In a safety Quantum application, synchronization by the PLC using `NI_ERT_854_20` EFB is not possible. The `DPM_Time` parameter is not available with the `NI_ERT_854_20` EFB.

DCF Time Base

The DCF 77E receiver delivers a 24 VDC signal in DCF77 format and can supply up to 16 ERT modules concurrently. The BCD coded time signal is transferred once a minute and synchronizes the ERT minutes changeover. When the ERT is restarted the software clock is synchronized within three minutes of receiving the first information. After this the ERT software clock time matches the standard time sender. If the send signal becomes unavailable the free running software clock can still be used but is not as precise. The DCF sender delivers CET (Central European Time), takes into account summer/winter time changes as well as seconds and years transitions.

GPS Time Base

Use the third party GPS receiver with DCF77 and IRIG-B time format for applications which use GPS satellite time references. The module demodulates the GPS signal, and it delivers DCF77 format output signal from 24 VDC and IRIG-B format output signal from 5 VDC. The ERT decodes the signal and synchronizes the transition for the internal software clock. GPS satellites sends UTC time (Universal Time Coordinated) which GMT (Greenwich Mean Time = Western European Time) corresponds to. Seconds and years transitions are taken into account. The recommended validity reserve for the DCF/IRIG-B time base signal is one hour (the settings range for DCF/IRIG-B sync is between 1 and 5 hours). Several ERT modules can be synchronized simultaneously using a GPS receiver.

NOTE: For the IRIG-B time format, the 140 ERT 854 20 module is compatible with IEEE Std C37.118, chapter F.1.4 "Control bit assignment". It is recommended that a GPS receiver that complies with IEEE Std C37.118 be used for a IRIG-B connection. Otherwise, it is possible that the time cannot be synchronized or there may be undetected errors present.

EFB Synchronized Internal Clock

If a clock only requires a lower precision, the ERT internal software clock can be synchronized with a time value sent by the master. The software clock runs freely until the next time value is received. Precision is usually within 100 milliseconds per hour and the software clock must be synchronized correspondingly often. The data transfer EFB provides the required time synchronization. This means several ERT modules can be supplied with almost the same time; the time source used is the derived data structure "DPM_Time". The validity reserve setting for the EFB synchronized internal software clock moves between 1 and 254 hours). However, if the time period is exceeded before the next transfer of a time signal, the ERT sets bit "Time Invalid" in the "Status" output word (bit 3 - TU), returned by the data transfer EFB. Time stamps set after this are invalid (the high priority byte for millisecond information is set to FF). The bit is reset as soon as the next valid time message is received.

Free Running Internal Clock

The ERT internal software clock can also be used on its own. Setting the validity reserve for the internal software clock to 0 activates duration mode, shown by the bit "Time not synchronized" in the "Status" output word (bit 4 - TA) which is returned by the data transfer EFB. In this case there is no validity reserve that can be exceeded and therefore no invalid time stamps. The bits "External Reference Error" and "Time Invalid" in the output word "Status" (Bit 2/3 - TE/TU) are not set; the time starts automatically without synchronization. The default start settings for the internal clock is 0 hours, 1/1/1990. The time settings can be made using:

- a telegram (e.g. by IEC 870-5-101)
- the CPU clock (using the "DPM_Time" data structure)

Chapter 4
Typical Application Areas

Typical areas of application

Overview

The ERT 854 20 is particularly suited for determining the binary input status and counter value that require a time stamp.

140 ERT 854 20 Applications

The following areas of application are valid for the 140 ERT 854 20:

- Processing binary inputs: Use as a standard I/O module with filtering and an input range of 24 - 125 VDC.
- Event Logging: The event of an individual process status can be logged with the corresponding time (time stamp). This enables the later reconstruction of the time point and the sequence of process signals "coming" or "going".
- Counter value: Use as a standard I/O module (with filtering, 32 bit summing with max. 500 Hz) with an input range of 24 - 125 VDC.
- Periodic time stamping of process values: Recording counter values in defined time intervals. The combined use of both function groups can be used as an advantage here.
- Time dependent switching actions: Outputs can be set regardless of time for controlling lighting, heating, ventilators, temperatures (building automation), or for opening/closing doors, machines, ... (safety measures). The output status can be recorded with the ERT.

Part II
Module Description

Chapter 5
Module Description

Overview

This chapter provides information about the structure of the 140 ERT 854 20 module and its technical data.

What Is in This Chapter?

This chapter contains the following topics:

Topic	Page
Overview	36
Features and Functions	38
Planning	39
Module Cabling	40
Diagnosis	45
Technical data	46

Overview

Introduction

The 140 ERT 854 20 is a Quantum Expert Module with 32 binary inputs (24 ... 125 VDC). The module is suitable for the evaluation of digital inputs, counter pulses and events.

Front View of the Module

Front View of the ERT 854 20

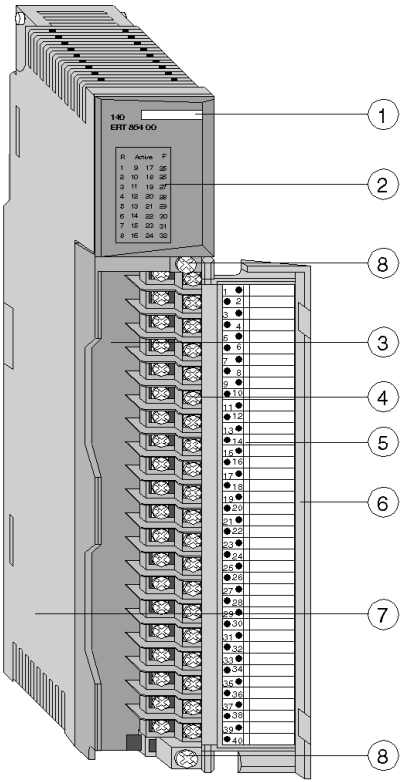

Location of Operating Elements

1 Color Code
2 Display field (LEDs)
3 Terminal Block
4 Connection terminals
5 Sliding Label (inside)
6 Cover for the terminal blocks
7 Standard housing
8 Screws for terminal block

NOTE: The tightening torque must be between 0.5 Nm and 0.8 Nm.

NOTICE

DESTRUCTION OF ADAPTER

- Before tightening the locknut to the torque 0.50...0.80 Nm, be sure to properly position the right-angle F adapter connector.
- During tightening, be sure to maintain the connector securely.
- Do not tighten the right-angle F adapter beyond the specified torque.

Failure to follow these instructions can result in equipment damage.

Features and Functions

Features

The ERT 854 20 is a Quantum Expert Module with 2 groups of 16 binary inputs (24...125 VDC). The input groups are potentially isolated to each other and to the internal logic. In addition to counted values, discrete inputs can be registered with or without event logging. A digital time standard (DTS) receiver can be connected for time synchronization.

NOTE: The reference input voltage must be identical to the input voltage level.

Mode of Functioning

The registers of the ERT 854 20 count impulses with frequencies of up to 500 Hz with an interruption/impulse period of 1 ms and provide these values as 32 bit counter values for the CPU. The module is logically divided into 4 blocks of 8 inputs. The inputs of each block can be processed as binary input signals, event or counters, depending on the parameters set.

The input processing (debounce time, edge recognition and inversion) can be configured separately for each input.

The module supports DCF77 formatted time receivers over a 24 VDC input.

The module supports IRIG-B formatted time receivers over a 5 VDC RS485 differential input.

Planning

What is to be planned

You plan:

- a slot in the Quantum rack (local or RIO station).
- the ERT Parameters. Each of the 4 ERT 854 20 input function blocks can be configured with a different functionality (e.g. counters or inputs with our without event recording).
- the connection of the reference voltage for each input group.
- the Process Peripherals Connection.
- the connection of an external time receiver.

Mounting Position in the Rack

Insert the module in any I/O slot on the Quantum and screw it to the rack. The module must be screwed into position for correct operation (EMC).

Mounting the Module

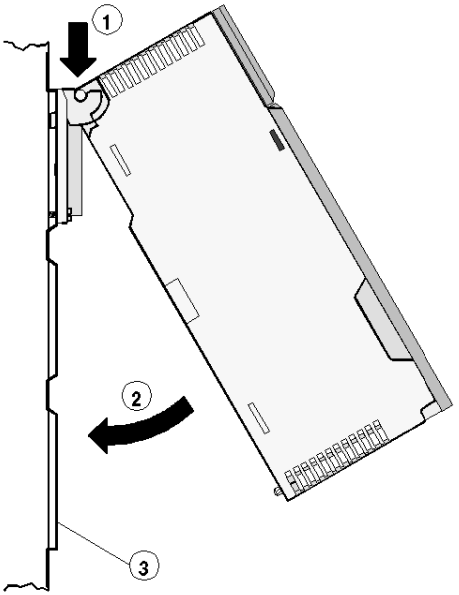

1 Insert the module
2 Screw the module to the rack
3 Rack

Module Cabling

Overview

This section describes the connection of time receivers, reference voltages and external input signals.

Reference Voltage

The input voltage range for the inputs is defined with the reference voltage. Reference voltages and input signals of the same group can be installed with a common fuse. Optionally, the inputs can also be individually fused.

DANGER

ELECTRICAL SHOCK

Turn off reference voltage of process inputs before wiring.

Failure to follow these instructions will result in death or serious injury.

CAUTION

MODULE DAMAGE

Never use the ERT module without a proper reference voltage to avoid damage to the module.

Failure to follow these instructions can result in injury or equipment damage.

DCF 77E

Connection example for the ERT 854 20 with a DCF 77E time receiver.

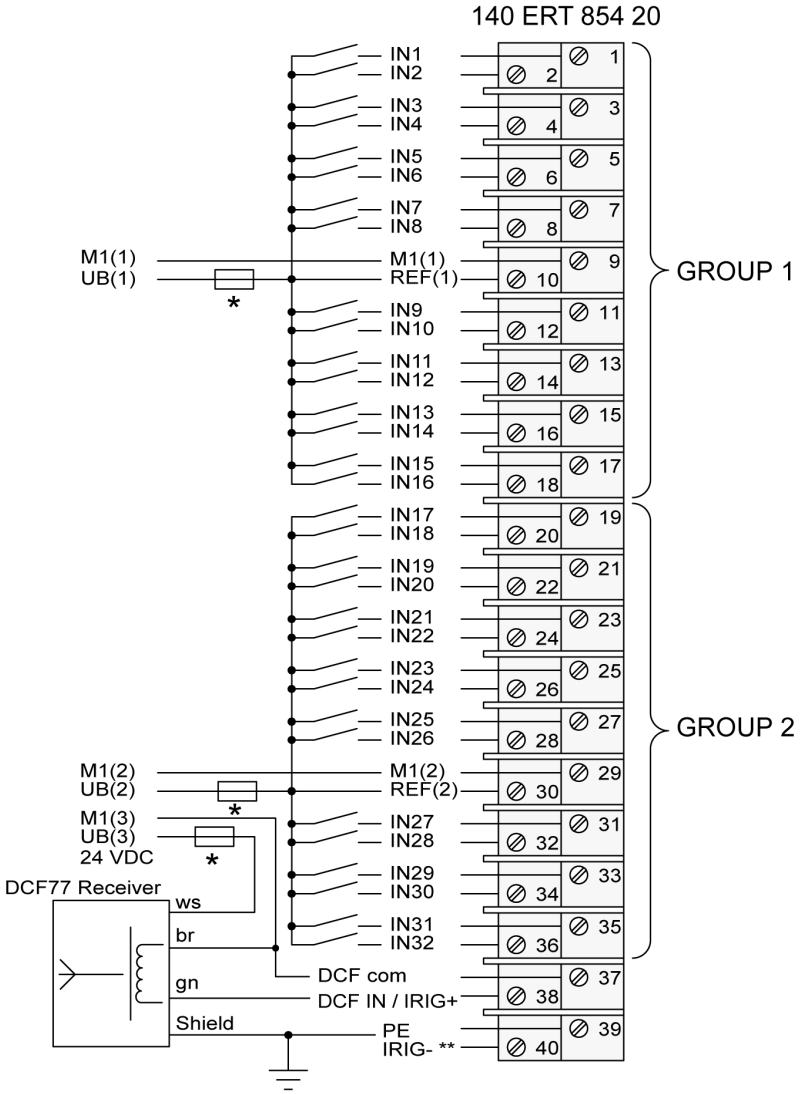

* UB(1), UB(2):24...125 VDC, UB(3): 24 VDC separate protection recommended

** not connected

NOTE: The tightening torque must be between 0.5 Nm and 0.8 Nm.

NOTICE
DESTRUCTION OF ADAPTER ● Before tightening the locknut to the torque 0.50...0.80 Nm, be sure to properly position the right-angle F adapter connector. ● During tightening, be sure to maintain the connector securely. ● Do not tighten the right-angle F adapter beyond the specified torque. **Failure to follow these instructions can result in equipment damage.**

DCF77 and IRIG-B Time Receivers

Connection example for the ERT 854 20 with a DCF77 of GPS receiver.

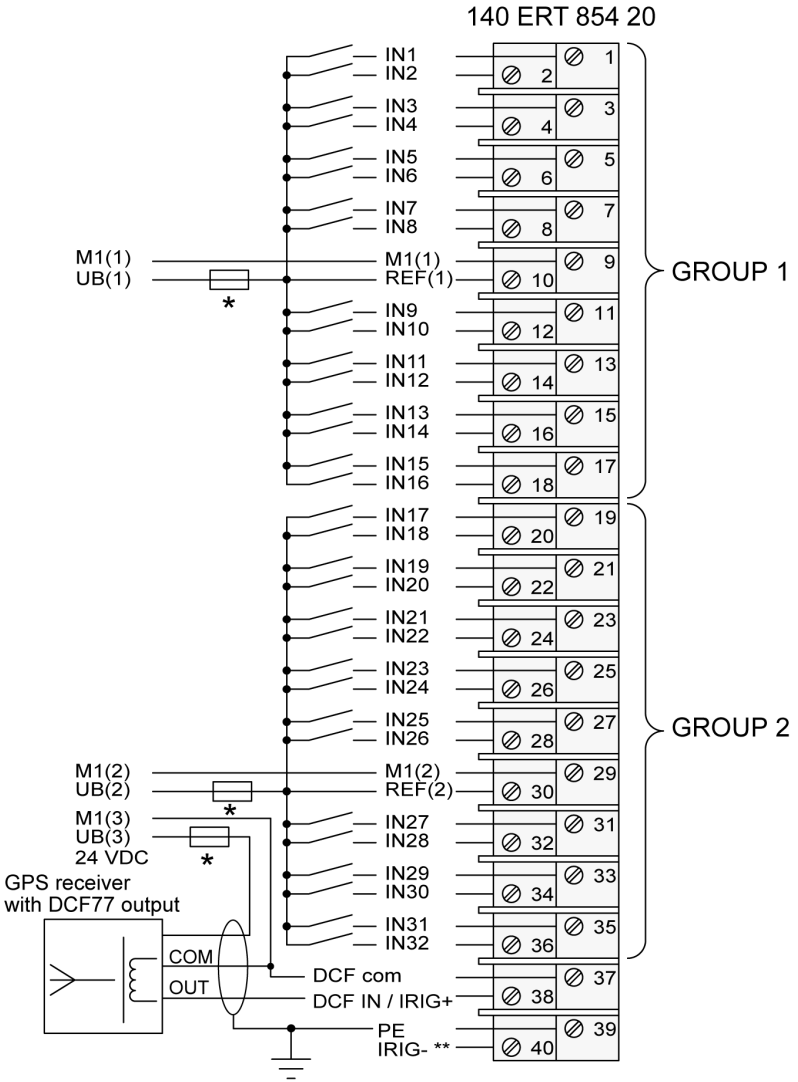

* UB(1), UB(2):24...125 VDC, UB(3): 24 VDC separate protection recommended

** not connected

Connection example for the ERT 854 20 with an IRIG-B of GPS receiver.

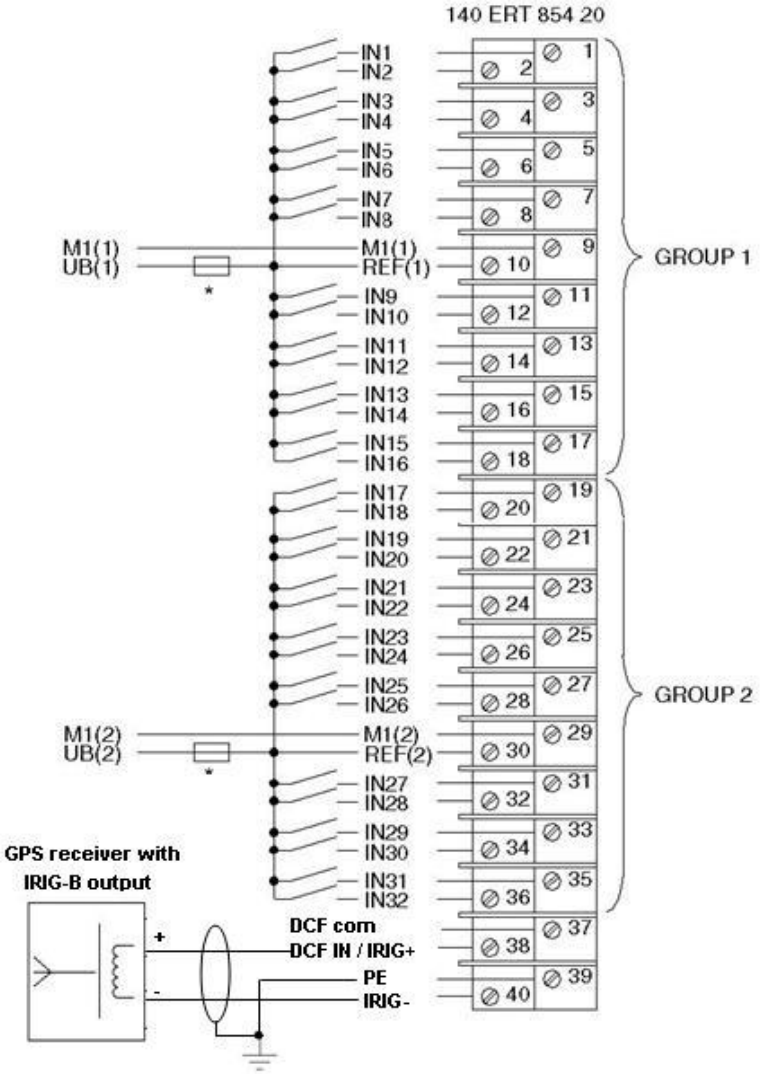

* UB(1), UB(2):24...125 VDC separate protection recommended

Diagnosis

Condition Display

The modules have the following indicators:

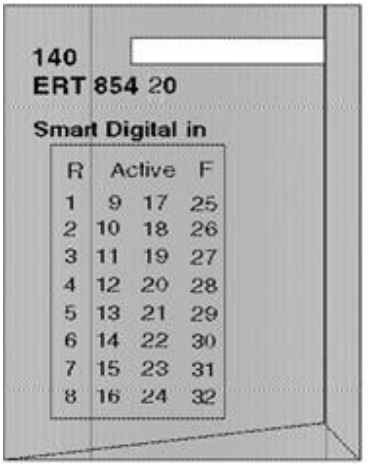

Meaning of the Indicators:

Indicators:	Color	Meaning
R	green	Ready. Self test successful when voltage connected. The firmware is running correctly and the module is ready for operations.
Active	green	Bus communication is present.
F	red	Module Error. Lights when the configured error occurs.
1 ... 32	green	Input Signal. Indicator for process input signal "1".

Technical data

Supply

Data of the Supply

Reference voltage for each process input group	24...125 VDC, (max. 18...156 VDC) Current consumption per group: max. 20 mA
internal via the rack	5 VDC, max. 300 mA

Process Inputs

Data of the Process Inputs

Number	32 in 2 Groups			
Input Voltage	24...125 VDC			
Potential isolation	Inputs to the Quantum Bus, Group 1 to Group 2 (Opto-coupler) 1780 VAC for 1 minute			
Debounce time	0...256 ms (configurable)			
Inversion	Set with parameters			
Max. Cable length	400 m unshielded, 600m shielded			
Switching Level: Nominal voltage for the input signals Min current for a 1 signal	 24 V 6 mA	 48V 2.5 mA	 60 V 2.5 mA	 125 V 1 mA
Signal level 0 signal Signal level 1 signal	nominal 0% of the group reference voltage, max. +15 %, min. -5 % nominal 100% of the group reference voltage, max. 125 %, min. 75 %			
Internal power loss from all process inputs	max 7.5 W			

NOTE: The reference input voltage must be identical to the input voltage level.

Input for the time receiver

Data for the time receiver

Number	1 indicates DCF77 data format from DCF- 077E, and DCF77/IRIG-B data format from third party GPS receivers.
Input Voltage	24 VDC for DCF77 5V VDC RS485 differential input for IRIG-B
Potential isolation	Optocoupler
Time Stamp resolution	1 ms
Current consumption	5 mA for DCF77 1 unit load for IRIG-B RS485

Mechanical structure

Dimensions and Weight

Format	Width = 40.34 mm (Standard Housing)
Mass (weight)	0.45 kg

Connection Type

Data of the Connections

Process Inputs, DCF receiver	40 pins Terminal Block

Environmental conditions

Data of the Environmental Conditions

System Data	See Quantum User Manual
Power loss	Max. 9W, typical 5W

Part III
Configuration

Overview

The 140 ERT 854 20 is included in Control Expert as a standard module. This section describes the configuration of the modules and the parameterization of the corresponding EFBs. An example is given.

What Is in This Part?

This part contains the following chapters:

Chapter	Chapter Name	Page
6	Quantum Addressing Modes	51
7	The Parameter Configuration Window	57
8	Startup the 140 ERT 854 20	63
9	Integration in the Application Program	71
10	EFBs for the 140 ERT 854 20	75

Chapter 6
Quantum Addressing Modes

Overview

In the functional description of this expert module, the %IW/%MW (3x/4x) register addressing mode established in the Quantum world is widely used. This chapter describes the different modes used in Control Expert to address the data from a Quantum module.

NOTE: Topological addresses overlapping (%IWr.m.c) is not supported by Quantum application, use flat addressing (%IWx) when memory overlapping control is needed.

What Is in This Chapter?

This chapter contains the following topics:

Topic	Page
Flat Addressing—800 Series I/O Modules	52
Topological Addressing—800 Series I/O Modules with Control Expert	53
Addressing Example	54
Discrete I/O Bit Numbering	55
Addressing	56

Flat Addressing—800 Series I/O Modules

Introduction

800 series I/O modules follow a system of flat address mapping in Control Expert. To work properly, each module requires a determinate number of bits and/or words. The IEC addressing system is equivalent to the 984LL register addressing. Use the following assignments:

- 0x is now `%Mx`
- 1x is now `%Ix`
- 3x is now `%IWx`
- 4x is now `%MWx`

The following table shows the relationship between 984LL notation and IEC notation:

Outputs and Inputs	984LL Notation Register Addresses	IEC Notation		
		System Bits and Words	Memory Addresses	I/O Addresses
output	0x	System Bit	%Mx	%Qx
input	1x	System Bit	%Ix	%Ix
input	3x	System Word	%IWx	%IWx
output	4x	System Word	%MWx	%QWx

To access the I/O data of a module,

Step	Action
1	Enter the address range in the configuration screen.

Examples

The following examples show the relationship between 984LL register addressing and IEC addressing:

000001 is now `%M1`

100101 is now `%I101`

301024 is now `%IW1024`

400010 is now `%MW10`

Topological Addressing—800 Series I/O Modules with Control Expert

Accessing I/O Data Values

Use topological addressing to access I/O data items. Identify the topological location of the module within an 800 series I/O module with Control Expert using the following notation:

```
%<Exchangetype><Objecttype>[\b.e\]r.m.c[.rank]
```

where:

- **b** = bus
- **e** = equipment (drop)
- **r** = rack
- **m** = module slot
- **c** = channel

NOTE: When addressing,

1. The [\b.e\] defaults to \1.1\ in a local rack and does not need to be specified.
2. The rank is an index used to identify different properties of an object with the same data type (value, warning level, error level).
3. The rank numbering is zero-based, and if the rank is zero, omit the entry.

For detailed information on I/O variables, please refer to *EcoStruxure™ Control Expert, Program Languages and Structure, Reference Manual*.

Reading Values: An Example

To read	Action
input value (rank = 0) from channel 7 of an analog module located in slot 6 of a local rack:	Enter `%IW1.6.7[.0]`
input value (rank = 0) from channel 7 of an analog module located in slot 6 of drop 3 of RIO bus 2:	Enter `%IW\2.3\1.6.7[.0]`
'out of range' value (rank = 1) from channel 7 of an analog module located in slot 6 of a local rack:	Enter `%I1.6.7.1[.0]`

Addressing Example

Comparing the 3 Addressing Modes

The following example compares the 3 possible addressing modes. An 8-channel thermocouple 140 ATI 030 00 module with the following configuration data is used:

- mounted in slot 5 of the CPU rack (local rack)
- starting input address is 201 (input word `%IW201`)
- end input address is 210 (input word `%IW210`)

To access the I/O data from the module you can use the following syntax:

Module data	Flat Addressing	Topological Addressing	IODDT Addressing	Concept Addressing
Channel 3 temperature	%IW203	%IW1.5.3	My_Temp.VALUE	300203
Channel 3 out of range	%IW209.5	%I1.5.3.1	My_Temp.ERROR	300209 Bit 5 to be extracted by user logic
Channel 3 range warning	%IW209.13	%I1.5.3.2	My_Temp.WARNING	300209 Bit 13 to be extracted by user logic
Module internal temperature	%IW210	%IW1.5.10	not accessible through IODDT	300210

NOTE: For the IODDT the data type `T_ANA_IN_VWE` is used and the variable `My_Temp` with the address `%CH1.5.10` was defined.

For comparison, the register addressing as used with Concept is added in the last column. As Concept does not support direct addressing of a bit in a word, the bit extraction has to be performed in the user program.

Discrete I/O Bit Numbering

Introduction

The numbering of channels of an I/O module usually starts with 1 and counts up to the maximum number of supported channels. The software however starts numbering with a 0 for the least significant bit in a word (LSB). The Quantum I/O modules have their lowest channel mapped to the most significant bit (MSB).

The following figure shows the mapping of I/O channels related to the bits in a word:.

1	2	3	4	5	6	7	8	9	10	11	12	13	14	15	16	I/O Channels
15	14	13	12	11	10	9	8	7	6	5	4	3	2	1	0	Bit numbering
MSB															LSB	

Word Addressing Versus Bit Addressing

Mainly discrete I/O modules can be configured to deliver their I/O data either in word format or in bit format. This can be selected during configuration by selecting either `%IW` (`%MW`) or `%I` (`%M`). If you need to access a single bit from an I/O module configured to use an I/O word, you can use the syntax `%word.bit`. The following table gives you the connection between I/O point number and the associated I/O address in bit and word addressing.

The table shows a 32-point input module in the main rack, slot 4 configured with starting address `%I1` or `%IW1`:

I/O channel	Bit address (flat addressing)	Bit address (topological addressing)	Bit address extracted from word (flat addressing)	Bit address extracted from word (topological addressing)
1	%I1	%I1.4.1[.0]	%IW1.15	%IW1.4.1.1.15
2	%I2	%I1.4.2[.0]	%IW1.14	%IW1.4.1.1.14
3	%I3	%I1.4.3[.0]	%IW1.13	%IW1.4.1.1.13
...				
15	%I15	%I1.4.15[.0]	%IW1.1	%IW1.4.1.1.1
16	%I16	%I1.4.16[.0]	%IW1.0	%IW1.4.1.1.0
17	%I17	%I1.4.17[.0]	%IW2.15	%IW1.4.1.2.15
18	%I18	%I1.4.18[.0]	%IW2.14	%IW1.4.1.2.14
...				
31	%I31	%I1.4.31[.0]	%IW2.1	%IW1.4.1.2.1
32	%I32	%I1.4.32[.0]	%IW2.0	%IW1.4.1.2.0

Addressing

Flat Addressing

This module requires 7 contiguous, 16-bit input words (%IW), and 5 contiguous, 16-bit output words (%QW).

Topological Addressing

Topological addresses for the 140ERT85420 Time Stamp Module:

Point	I/O Object	Comment
Input 1	%IW[\b.e\]r.m.1.1	Data
	• • •	
Input 7	%IW[\b.e\]r.m.1.7	Data
Output 1	%QW[\b.e\]r.m.1.1	Data
	• • •	
Output 5	%QW[\b.e\]r.m.1.5	Data

Used abbreviations: **b** = bus, **e** = equipment (drop), **r** = rack, **m** = module slot.

Note

The above described addressing is for information only. Direct access to the modules raw data is not recomended. Data exchange should be performed through the EFBs for the ERT module.

Chapter 7
The Parameter Configuration Window

The Parameter Configuration Window

Call

You can access the Parameter Configuration window for the 140 ERT 854 20 module by double-clicking on a module in the Quantum rack.

You can also open the configuration window by clicking on the module with the right mouse button.

Structure of the Parameter Configuration Window

The Parameter Configuration window contains general parameters for the module and the specific parameters for the 4 function blocks.

The parameters have been present to default values contained in the "I/O Image", and can be modified by the user.

Parameters can be edited only when the application program is not running.

Parameters and Default Values

Structure of the Parameter Configuration window, general parameter.

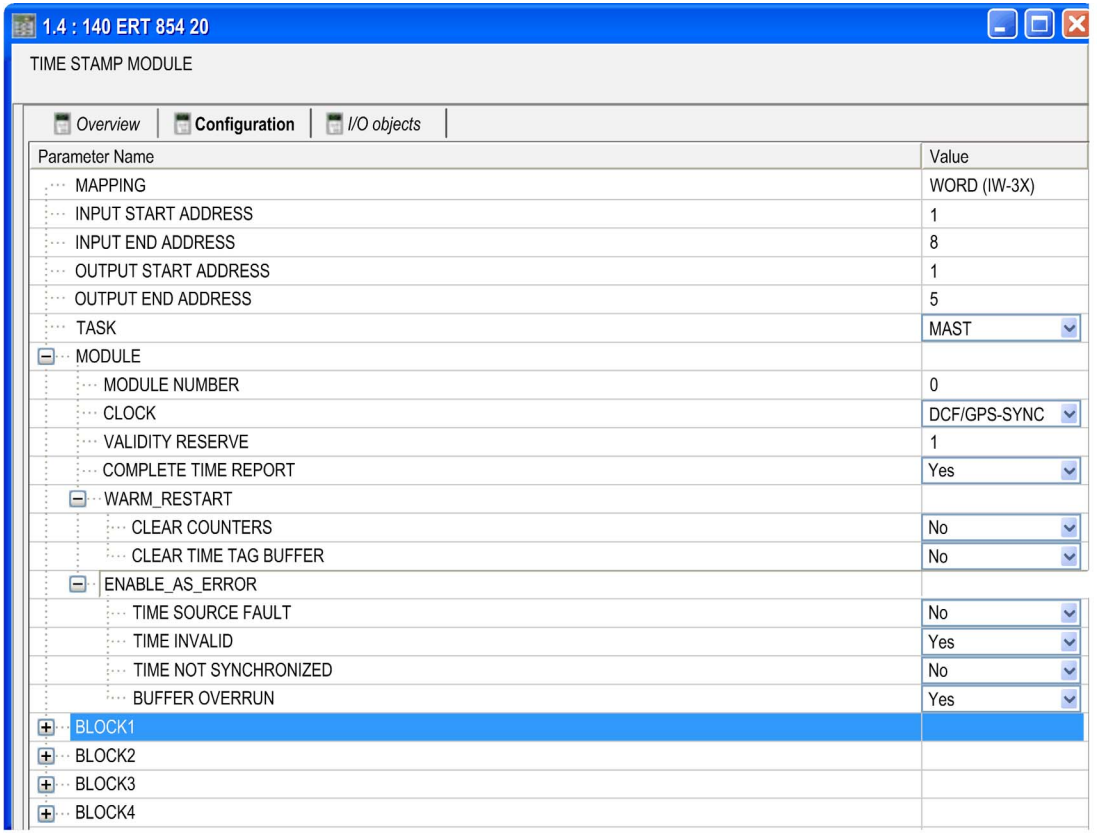

The following table provides an overview of the general module parameters and their default values:

Name	Default value	Options	Meaning
MAPPING	WORD (IW-3X)	-	The default value cannot be changed because the ERT 854 20 module normally reads the raw values from the input words (%IW-3X) and writes them to the output words (%MW-4X).
INPUT START ADDRESS	1	-	Input starting address

Name	Default value	Options	Meaning
INPUT END ADDRESS	8	-	The ending address for the inputs results from the starting address for the inputs plus 7 because the module occupies 8 %IW registers.
OUTPUT START ADDRESS	1	-	Output starting address
OUTPUT END ADDRESS	5	-	The ending address for the outputs results from the starting address for the inputs plus 4 because the module occupies five %MW registers.
TASK	MAST	MAST/FAST(AUX0/ AUX1/AUX2/AUX3 only with CPU 6•• ••, MAST only when used with a M580 CPU)	MAST = Master Task is assigned FAST = Fast Task is assigned AUX = AUX Task is assigned The settings for MAST/ TASK/ AUX are defined during CPU configuration.
MODULE:			
MODULE NUMBER	0	1...127	User defined, inserted in event message. The uniqueness of the value is not checked. If 0 = Default, no selection made.
CLOCK	DCF/GPS-SYNC	NO CLOCK	Internal clock is deactivated.
		INTERNAL CLOCK	Telegram synchronization. The clock runs either without monitoring or is monitored within a validity reserve.
		DCF/GPS-SYNC	External synchronization in DCF77 format by the DCF or GPS clock.
		IRIG-B/GPS-SYNC	External synchronization in IRIG-B format.
		TSXNTP100	External synchronization by a TSXNTP100 module.
VALIDITY RESERVE	1 hour	1...254 hours	Internal clock: Time from the last synchronization until setting the TU bits and the time until the time stamp becomes invalid.
		0	Internal clock: 0 = free run mode without elapsed time (TE/TU bits are not set).
		1...5 hours	GPS Clock: 1 hour recommended

Name	Default value	Options	Meaning
COMPLETE TIME REPORT	Yes	No/Yes	Switches the transfer of the complete time telegram (with month and year) on or off. Transfer of the complete time report is made as dummy event 1x directly before a time stamp event: the prerequisite is always transferring a time stamp event for monthly transitions, every start/stop of user programs, clearing the time stamp buffer, starting/setting the clock, otherwise the complete time report telegram is not sent.
WARM_RESTART:			
CLEAR COUNTERS	No	No/Yes	Clear counter on warm restart
CLEAR TIME TAG BUFFER	No	No/Yes	Clear FIFO buffer on warm restart
ENABLE_AS_ERROR:			
TIME SOURCE FAULT	No	No/Yes	Error values shown by the error LED "F". The enabled bits indicate detected errors. Every disabled bit is treated as a warning (the bits for an error during a self test are always set).
TIME INVALID	Yes	No/Yes	
TIME NOT SYNCHRONIZED	No	No/Yes	
BUFFER OVERRUN	Yes	No/Yes	

Structure of the Parameter Configuration window, specific parameters for the 4 function blocks.

1.4 : 140 ERT 854 20

TIME STAMP MODULE

Overview | **Configuration** | I/O objects

Parameter Name	Value
MAPPING	WORD (IW-3X)
INPUT START ADDRESS	1
INPUT END ADDRESS	8
OUTPUT START ADDRESS	1
OUTPUT END ADDRESS	5
TASK	MAST
MODULE	
BLOCK1	
FUNCTION 1	1POINT WITH TIME TAG
DEBOUNCE FILTER TYPE 1	STEADY STATE
DECHATTERING 1	No
INPUT1	
DISABLE 1	No
INVERT 1	No
BOTH EDGES 1	Yes
DEBOUNCE TIME 1	1
CHATTERING COUNT 1	0
CHATTERING TIME1	
INPUT2	
INPUT3	
INPUT4	
INPUT5	
INPUT6	
INPUT7	
INPUT8	
BLOCK2	

The following table provides an overview of the specific parameters for the 4 function blocks and their default values. The parameters can be set individually for each block.

Name	Default value	Options	Meaning
BLOCK	1...4	1...4	Number of the selected function block.
FUNCTION	1 POINT WITH TIME TAG	DISCRETE	Only binary inputs
		COUNTER	Binary and counter values
		1 POINT WITH TIME TAG	Binary + 1 bit event logging
		2 POINT WITH TIME TAG	Binary + 2 bit event logging
		8 POINT WITH TIME TAG	Binary + 8 bit event logging
DEBOUNCE FILTER TYPE	STEADY STATE	STEADY STATE/INTEGRATING	Debounce filter mode
DECHATTERING	No	No/Yes	Disabling/enabling the chatter filter

The following parameters refer to individual inputs (**Exception:** Chatter time refers to 2 inputs next to each other):

Name	Default value	Options	Meaning
INPUT	1...32	1...8, 9...16, 17...24, 25...32	Input number sequence for the function block selected
DISABLE	No	No/Yes	Impedes processing of input data for the input (always 0)
INVERT	No	No/Yes	Reverse polarity of the input
BOTH EDGES	Yes	No/Yes	Edge monitoring for both edges
DEBOUNCE TIME	1	0 1...255	0 = Without internal SW delay 1...255 = Debounce time 2...256 ms
CHATTERING COUNT	0	0...255	Chatter number 0...255 (for event/counter inputs) 0 = Chatter filter deactivated
CHATTERING TIME	1	1...255	Chatter filter time duration 1...255*0.1 seconds **Note:** This setting refers to 2 inputs next to each other.

I/O Object

The %IW/%MW (3x/4x) register addressing mode established in the Quantum range is also used for 140 ERT 854 20. It reads the raw values from the input words (%IW-3x) and writes them to the output words (%MW-4x).

Chapter 8
Startup the 140 ERT 854 20

Overview

This chapter describes the preconditions and boundary conditions required for starting the 140 ERT 854 20 and provides a check list with the necessary steps.

What Is in This Chapter?

This chapter contains the following topics:

Topic	Page
140 ERT 854 20 Module and Resource Limitations	64
DCF Receiver	65
The GPS Receiver	66
Behavior when starting/restarting and the data storage	67
Check List	69

140 ERT 854 20 Module and Resource Limitations

Limitations

Check whether the following conditions have been adhered to before starting the configuration:

- Unity Pro V7.0 or later.
  Unity Pro is the former name of Control Expert for version 13.1 or earlier.
- IRIG-B time source is not supported in Unity Pro V4.1, V5.0 with hotfix, and V6.0
- Can be used in local or remote racks (RIO) with RIO Drop Firmware higher than V1
- Cannot be used in DIO Drops
- Up to 8 ERTs can be mounted on each S908 remote (RIO) drop
- Processing signal status > 1 millisecond + filter time possible
- Counter inputs up to 500 Hz with 32 bit
- Each ERT requires a data transfer EFB
- 8 INPUT words, 5 OUTPUT words per ERT
- Several ERT modules can be connected to one standard time receiver. The 140 ERT 854 20 requires 5 mA from the receiver for DCF77 time format

The 140 ERT 854 20 requires 1 unit load from the receiver for IRIG-B time format.

Time Receiver

The standard time receiver provides an output signal in DCF77 format for 24 VDC or IRIG-B format for 5 VDC RS485 differential input.

The following standard time receivers are provided:

- DCF77E: DCF77 long wave receiver for Europe
- GPS receiver: DCF77 or IRIG-B time format

DCF Receiver

Overview

The DCF 77E module operates as an internal receiver with integrated antenna.

The module receives and converts the received time signal in a 24 VDC signal in DCF77 format, and amplifies the signal before sending it on to the 140 ERT 854 20 module.

DCF Signal

The time signal received in the Central European Time zone is known as the DCF77 and provides CET. It is sent from the atomic clock to the National Institute for Science and Technology Braunschweig, Germany, and sends a long wave signal of 77.5 kHz (from which DCF77 derives its name) via a transmitter in Frankfurt am Main. The signal can be received throughout Europe (in a radius of approximately 1000 km from Frankfurt).

When selecting a location for erecting an antenna, the following sources of interference should be taken into account which could disturb or destroy signal reception through their DCF receivers:

- Electromagnetically contaminated areas. Avoid areas with potential sources of interference, such as strong transmitters, switching stations and airports. Strong interference can also be caused by industrial machinery and cranes.
- Steel supports in buildings, rooms and appartments. Poor reception can occur in cellars, underground car parks and closed operating cabinets.
- "Shadows" and "dead band" in mountain areas, high buildings, and so on.

The GPS Receiver

Overview

The GPS receiver module is a GPS time signal receiver. Other usual GPS standard time receivers can be used as long as they deliver the time signal in DCF77 format with a 24 VDC potential or IRIG-B format with a 5 VDC RS485 differential input.

GPS Signal

A group of lower orbiting GPS satellites (Global Positioning System) send radio signals from which extensive time information can be derived. Their orbits are distributed evenly so that every point on earth is covered by at least 3 different satellites. The GPS signal can be received across the whole world. The absolute time precision achieved by the GPS signal is considerably higher than that reached by the DCF receiver.

GPS satellites sends UTC time (Universal Time Coordinated) which corresponds to GMT (Greenwich Mean Time). Seconds and years transitions are taken into account. The GPS receiver can be be configured using a time offset from UTC corresponding to the local time zone. Summer/winter time change overs can be configured likewise.

Calendar and day data is diverted from the GPS signal and transferred to the 140 ERT 854 20 module.

The antenna is ordered separately from the GPS receiver. More details are contained in the technical data section of your reciever.

When selecting a location for erecting an antenna, the following sources of interference should be taken into account which could disturb or destroy signal reception through their GPS receivers:

- Electromagnetically contaminated areas: Avoid areas with potential sources of interference, such as strong transmitters, switching stations and airports.
- Limited to the sky and the horizon: Erect the antenna outside. Enclosed spaces or operating cabinets impedes satellite reception.
- Length of the antenne cable: Do not exceed the maximum permitted length of the antenne cable.
- Atmospheric conditions: Heavy snowfall and rain can impede your GPS receiver or even prevent signal reception.

Behavior when starting/restarting and the data storage

Cold Start

Cold start is the default behavior of the ERT when connecting or reconnecting a power supply.

- Recorded events, counter values and the current parameters of the ERT are initialized with a defined state.
- The recording of the process data is delayed until the PLC has been started and can therefore provide the ERT with a valid parameter set.
- Since the ERT does not have a hardware clock, the internal software clock is invalid until it has been synchronized in a suitable form:
  - Depending on the source which has been configured for time synchronization, the time stamps for recorded events are set to invalid time until either: the internal clock is set with a DPM_Time value using the EFB or time synchronization with an external time signal has occurred.
  - A special case: If the "clock" parameter of the ERT was configured as an "internal clock" in free running mode (with a validity reserve of zero), the internal clock starts with a default setting at hour 0 on 1/1/1990.
- If a "complete time report" has been configured, a complete time transfer is done directly before the first recorded event so that the clock synchronization follows.

Data Storage

You can maintain the integrity of the current data of the 140ERT85420 with the internal non-volatile RAM. If the supply voltage falls below a defined limit, it will be recognized by the rack. All recorded data, counter values and the current parameter set are saved in non-volatile RAM by the firmware and remain until the next warm start *(see page 68)*. In situations where saving in the 140ERT85420 does not happen (5VDC short circuit or hot-swap of the module), a cold start is performed.

NOTE:

1. If a 140ERT85420 module which resides in a rack with recorded events, counter values, and parameter sets, is pulled out and inserted to another module with the same configuration and user application, unexpected data will be seen in Control Expert. To avoid such unexpected data, FIFO buffer should be cleared on warm restart.
2. Data storage will not be supported in hot-swap case.

Warm Start

Reconnecting a stabile supply voltage causes a warm start of the ERT module, as long as the module is in a state where it can store the current data in a consistent form.

- All recorded events, counter values and the current parameters of the ERT are restored from the non-volatile RAM.
- If the "warm start" parameters ("Clear counter"/"clear message buffer") are configured, the recorded events and/or counter values are erased.
- Recording of the process data with the ERT is immediately continued with the same parameter set even if the PLC is not started yet or the remote connection could not be restored at this time.
- Since the ERT does not have a hardware clock, the software clock is invalid until it has been synchronized in a suitable form:
  - Depending on the source which has been configured for time synchronization, the time stamps for all recorded events are set to invalid time until either: the internal clock is set with a DPM_Time value using the EFB, or time synchronization with an external time signal has occurred.
  - A special case: If the "clock" parameter of the ERT was configured as an "internal clock" in free running mode (with a validity reserve of zero), the internal clock starts with a default setting at hour 0 on 1/1/1990.
- If a "complete time report" has been configured, a complete time transfer is done directly before the first recorded event so that the clock synchronization follows.
- If the corresponding data transfer EFB is active in the PLC again, the transfer of the events and counter values in the FIFO buffer of the ERT is continued. Current binary input values and status words are also transferred.
- If the PLC provides a new parameter set when starting which would mean a change in the time of process data evaluation, all recorded events and counter values are cleared since they would no longer be consistent with the new parameter set.

Check List

Step by Step

The following steps are to be performed for successfully start-up of the 140 ERT 854 20:

Step	Action
1	Install the 140 ERT 854 20 module in the local or remote rack.
2	Connect the designated process peripherals and the standard time receiver to the module. Refer to *Module Cabling (see page 40)*.
3	Do not forget to connect the reference supply voltage for the ERT input groups. **Note:** Follow the installation guidelines for the antennas for the standard time receiver.
4	Enter the 140 ERT 854 20 in the I/O map. **Note:** The module requires eight %IW registers and five %MW registers in state RAM.
5	Configure the 140 ERT 854 20 in the corresponding Parameter Configuration window *(see page 57)* to provide the required functionality.
6	Use the correct EFB from the I/O management function block library (Quantum I/O configuration family) to provide the "slot" input parameter for the data transfer EFB either: ● `QUANTUM` *(see page 79)* for local module racks, ● or, `DROP` *(see page 76)* for remote module racks. In a safety Quantum application, use the respective EFBs from the safety function block library (Quantum_IO family), either `NI_QUANTUM` *(see page 101)* for local or `NI_DROP` *(see page 98)* for remote module racks.
7	Define EFB user data structures for the required data types. Events can be "used", for example, by outputting them to a printer or storing them in central data storage.
8	Use the `ERT_854_20` *(see page 82)* data transfer EFB from the I/O management function block library (Expert I/O module family) to transfer ERT data. In a safety Quantum application, use the respective EFB from the safety function block library (Quantum_IO family) `NI_ERT_854_20` *(see page 104)*. **NOTE:** The transfer of new events with the data transfer EFB overwrites the previous event information. Therefore, the user confirmation should only be provided when the data has been evaluated and is no longer needed.

Chapter 9
Integration in the Application Program

Overview

The chapter contains information about how the `140 ERT 854 20` module and respective EFBs are inserted in the Control Expert application program.

What Is in This Chapter?

This chapter contains the following topics:

Topic	Page
Integrating Intelligent I/O Modules	72
Configuration Section	73
Processing Section	74

Integrating Intelligent I/O Modules

Introduction

EFBs are provided for integrating intelligent I/O modules. The EFBs are designed so that the program can be created as independently as possible from the hardware module used. The project-specific information is processed and stored in data structures on the PLC using hardware-dependent EFBs. The data transfer EFB works with these data structures. It reads the raw values from the input words (%IWx), processes them and writes the ERT handshake and clock synchronization data to the output words (%MWx). The result of this is that changes of direct addresses or changes of the input or output parameters are automatically evaluated by the EFBs.

Dividing into Sections

Since the evaluation of the configured data is only done once after loading, it is recommended that the EFBs for linking to intelligent modules are divided into several sections.

A division of at least two sections are recommended.

- Configuration section
- Processing section

By division into a configuration section, and several processing sections, the CPU load can be reduced; because the configuration section only has to be executed once (after a restart or a warm start). The processing section must usually be executed continuously.

The configuration section is controlled with the EN inputs of the corresponding EFB. The EFBs are enabled with internal variables that are set to 1 in the first cycle.

Configuration Section

Introduction

The configuration section is used to configure the analog input and output modules and controls data exchange between the analog EFBs, the State Ram and the configuration data.

The configuration section should be called `CfgErt` and the internal variable which controls it should be called `CfgErtDone` for compatibility with future Control Expert versions.

There are 2 possibilities for the control of the configuration sections:

- using the `EN` inputs of the individual EFBs
- enabling or disabling the configuration section.

Controlling the Configuration Section

Control of the configuration section is possible through the `EN` inputs of this section's individual EFBs. The EFBs are enabled through the `SYSSTATE` EFB which has `COLD` or `WARM` outputs that are set to 1 for one cycle after either a cold or a warm start.

Example of a `CfgErt` configuration section:

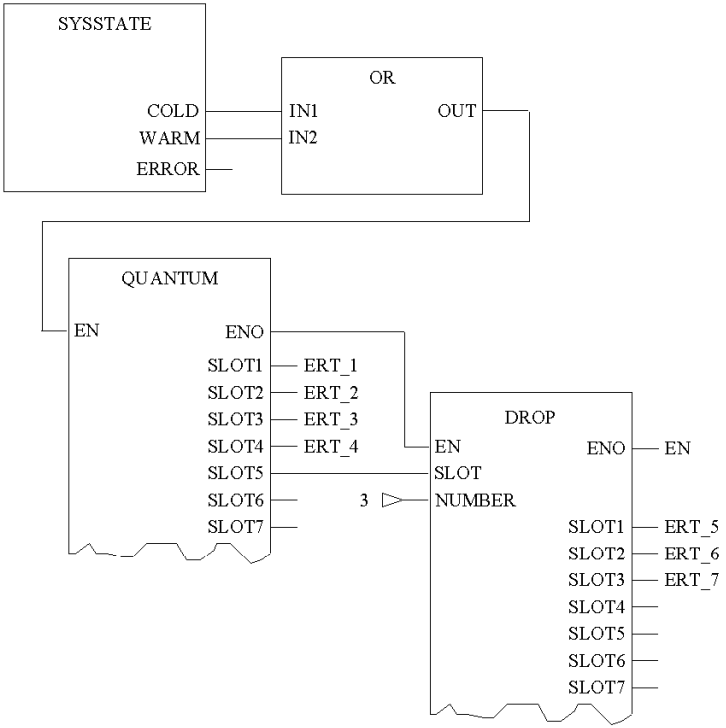

Processing Section

Introduction

The processing section for actual data processing of the `ERT_854_20` EFBs.

Example

The following example of a processing section uses the parameter "slot" for its `ERT_854_20` EFB which can be taken from a QUANTUM or a DROP EFB. Refer to *Configuration Section* *(see page 73)*.

Typical implementation of an `ERT_854_20` EFB in the processing section:

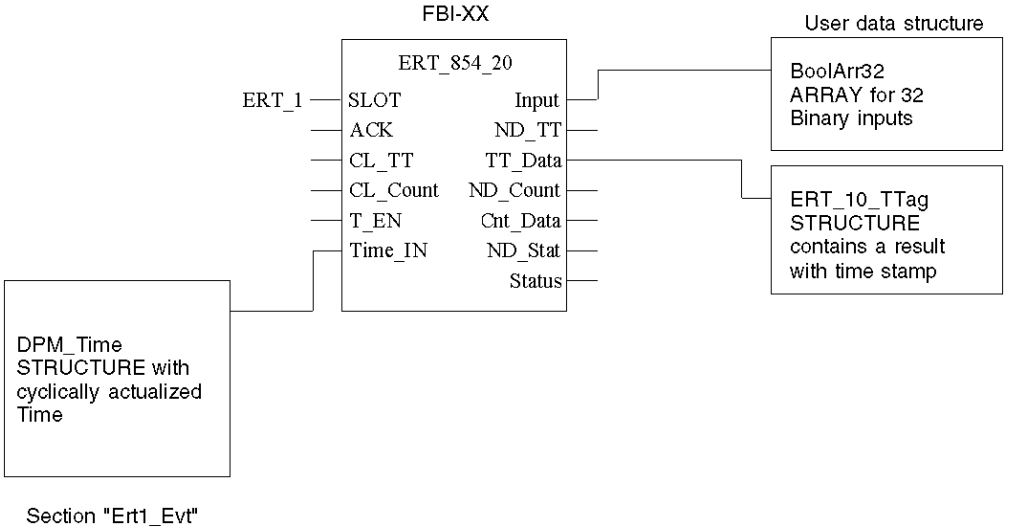

Chapter 10
EFBs for the 140 ERT 854 20

Overview

The EFBs described in this chapter are required for operating the 140 ERT 854 20:

- in a Quantum application: `QUANTUM`, `DROP` and `ERT_854_20`
- in a Safety Quantum application: `NI_QUANTUM`, `NI_DROP` and `NI_ERT_854_20`.

What Is in This Chapter?

This chapter contains the following sections:

Section	Topic	Page
10.1	DROP: Configuring an I/O station rack	76
10.2	QUANTUM: Configuring a main rack	79
10.3	ERT_854_20: Data transfer EFB	82
10.4	NI_DROP: Configuring an I/O station rack	98
10.5	NI_QUANTUM: Configuring a main rack	101
10.6	NI_ERT_854_20: Data transfer EFB	104

Section 10.1
DROP: Configuring an I/O station rack

Description

Function description

The function block is used to edit the configuration data of a remote or distributed I/O station for subsequent processing by module configuration EFBs.

To configure an I/O station rack, the `DROP` function block in the configuration section is connected to the corresponding `SLOT` output of the `QUANTUM` function block. The number of the I/O station defined in the I/O map has to be entered at the `NUMBER` input of the `DROP` function block. The function blocks for configuration of the analog modules of the I/O stations are connected to the `SLOT` outputs.

NOTE: Do not specify Literals at the `SLOT` inputs of the configuration EFBs. `SLOT` inputs must be connected to `SLOT` outputs. Values in SLOT outputs are not supposed to be used directly by the user. They refer to configuration areas in the PLC memory associated to the configured modules. Invalid values will cause a runtime error message in menu **Tools → Diagnostic Viewer**.

NOTE: In a M580 application with Quantum drops, `SLOT` input is let unconnected because the `QUANTUM` function block is not used.

`EN` and `ENO` can be configured as additional parameters.

Representation in FBD

Representation:

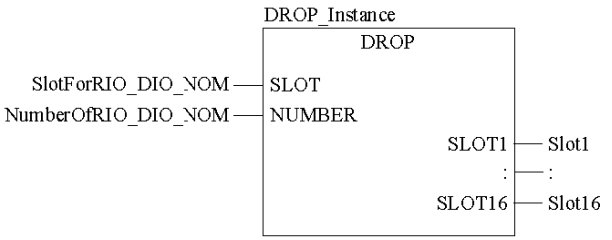

Representation in LD

Representation:

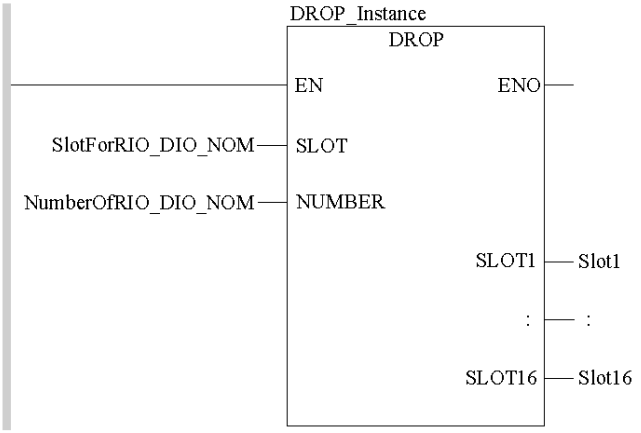

Representation in IL

Representation:

```
CAL DROP_Instance (SLOT:=SlotForRIO_DIO_NOM,
    NUMBER:=NumberOfRIO_DIO_NOM, SLOT1=>Slot1,
    SLOT2=>Slot2, SLOT3=>Slot3, SLOT4=>Slot4, SLOT5=>Slot5,
    SLOT6=>Slot6, SLOT7=>Slot7, SLOT8=>Slot8, SLOT9=>Slot9,
    SLOT10=>Slot10, SLOT11=>Slot11, SLOT12=>Slot12,
    SLOT13=>Slot13, SLOT14=>Slot14, SLOT15=>Slot15,
    SLOT16=>Slot16)
```

Representation in ST

Representation:

```
DROP_Instance (SLOT:=SlotForRIO_DIO_NOM,
    NUMBER:=NumberOfRIO_DIO_NOM, SLOT1=>Slot1,
    SLOT2=>Slot2, SLOT3=>Slot3, SLOT4=>Slot4, SLOT5=>Slot5,
    SLOT6=>Slot6, SLOT7=>Slot7, SLOT8=>Slot8, SLOT9=>Slot9,
    SLOT10=>Slot10, SLOT11=>Slot11, SLOT12=>Slot12,
    SLOT13=>Slot13, SLOT14=>Slot14, SLOT15=>Slot15,
    SLOT16=>Slot16) ;
```

Parameter description

Description of input parameters:

Parameter	Data type	Meaning
SLOT	INT	Slot for RIO, DIO, NOM
NUMBER	DINT	Number of RIO, DIO, NOM

Description of output parameters:

Parameter	Data type	Meaning
SLOT1	INT	Slot 1
:	:	:
SLOT16	INT	Slot 16

Runtime error

If no "Head" has been configured for the I/O station rack, an error message is returned.

NOTE: For a list of all block error codes and values, refer to the Tables of Error Codes for the IO Management Library *(see EcoStruxure ™ Control Expert, I/O Management, Block Library)*.

Section 10.2
QUANTUM: Configuring a main rack

Description

Function description

The function block is used to edit the configuration data of a QUANTUM main rack for subsequent use by the scaling EFBs.

To configure a Quantum main rack, the QUANTUM function block is inserted into the configuration section. The function blocks for the configuration of analog modules or the DROP function block for the I/O station are connected at its SLOT outputs.

NOTE: Do not specify Literals at the SLOT inputs of the configuration EFBs. SLOT inputs must be connected to SLOT outputs. Values in SLOT outputs are not supposed to be used directly by the user. They refer to configuration areas in the PLC memory associated to the configured modules. Invalid values will cause a runtime error message in menu **Tools → Diagnostic Viewer**.

NOTE: In a M580 application with Quantum drops, QUANTUM function block is not used. DROP function block is used alone without connecting its SLOT input.

EN and ENO can be configured as additional parameters.

Representation in FBD

Representation:

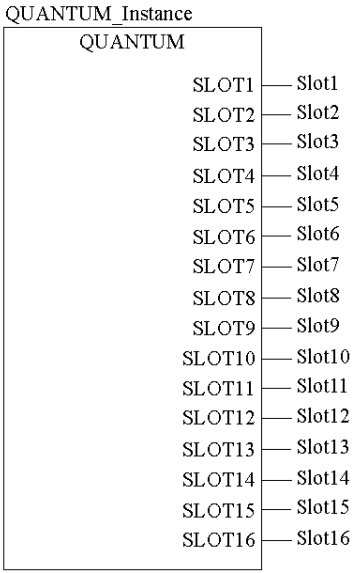

Representation in LD

Representation:

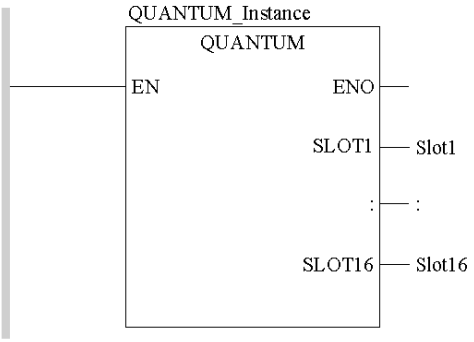

Representation in IL

Representation:

```
CAL QUANTUM_Instance (SLOT1=>Slot1, SLOT2=>Slot2,
    SLOT3=>Slot3, SLOT4=>Slot4, SLOT5=>Slot5, SLOT6=>Slot6,
    SLOT7=>Slot7, SLOT8=>Slot8, SLOT9=>Slot9,
    SLOT10=>Slot10, SLOT11=>Slot11, SLOT12=>Slot12,
    SLOT13=>Slot13, SLOT14=>Slot14, SLOT15=>Slot15,
    SLOT16=>Slot16)
```

Representation in ST

Representation:

```
QUANTUM_Instance (SLOT1=>Slot1, SLOT2=>Slot2,
    SLOT3=>Slot3, SLOT4=>Slot4, SLOT5=>Slot5, SLOT6=>Slot6,
    SLOT7=>Slot7, SLOT8=>Slot8, SLOT9=>Slot9,
    SLOT10=>Slot10, SLOT11=>Slot11, SLOT12=>Slot12,
    SLOT13=>Slot13, SLOT14=>Slot14, SLOT15=>Slot15,
    SLOT16=>Slot16) ;
```

Parameter description

Description of output parameters:

Parameter	Data type	Meaning
SLOT1	INT	Slot 1
:	:	:
SLOT16	INT	Slot 16

Runtime error

Internal I/O map errors will cause an error message.

NOTE: For a list of all block error codes and values, refer to Tables of Error Codes for the IO Management Library *(see EcoStruxure™ Control Expert, I/O Management, Block Library)*.

Section 10.3
ERT_854_20: Data transfer EFB

Introduction

This chapter describes the `ERT_854_20` block.

What Is in This Section?

This section contains the following topics:

Topic	Page
Description	83
Function mode	87
EFB configuration	89
Data Flow	90
Other Functions	95
Use of the `DPM_Time` structure for the synchronization of the internal ERT clock	96
Using the ERT >EFB Time Data Flow	97

Description

Function Description

The `ERT_854_20` EFB provides a software interface to the ERT 854 20 module which gives you simple access of the functions such as counting, time stamp, status or time synchronization. The `ERT_854_20` EFB coordinates the flow of Multiplex data from the ERT to the PLC using the input and output registers. It also puts the intermediate count values in an internal storage area until the data is complete, so a consistent set of all count values is made available to the statement list. A marker "New data" is always set for every data type if the input data type in the corresponding EFB output structure was copied.

As additional parameters, `EN` and `ENO` can be configured.

Inconsistency between EFB Output and %IW Data

In general the %IW data correspond to the EFB output pin named `INPUT`.

It should be taken into account that this EFB output is inconsistent to the %IW data for a few scans after starting PLC, because of the implemented handshake mechanisms in communication between the `ERT_854_20` EFB and the ERT hardware.

NOTE: In case the EFB reports a detected communication error the %IW data are not updated by the ERT hardware.
Do not use %IW data if the EFB returns ENO = false.

Appearance in FBD

Representation:

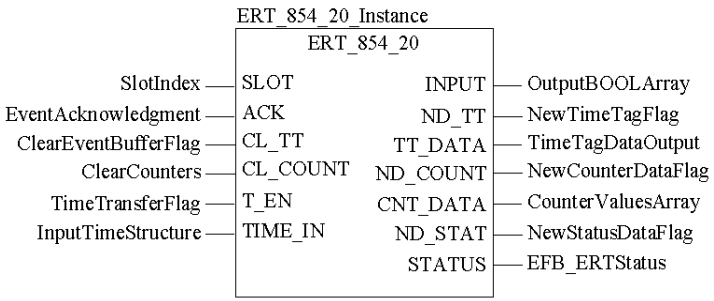

Appearance in LD

Representation:

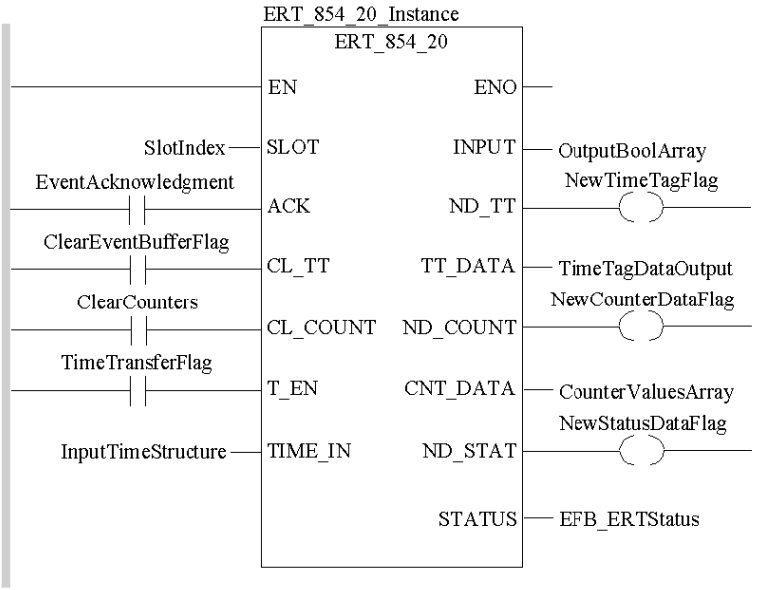

Appearance in IL

Appearance:

```
CAL ERT_854_20_Instance (SLOT:=SlotIndex,
    ACK:=EventAcknowledgment, CL_TT:=ClearEventBufferFlag,
    CL_COUNT:=ClearCounters, T_EN:=TimeTransferFlag,
    TIME_IN:=InputTimeStructure, INPUT=>OutputBoolArray,
    ND_TT=>NewTimeTagFlag, TT_DATA=>TimeTagDataOutput,
    ND_COUNT=>NewCounterDataFlag,
    CNT_DATA=>CounterValuesArray,
    ND_STAT=>NewStatusDataFlag, STATUS=>EFB_ERTStatus)
```

Appearance in ST

Appearance:

```
ERT_854_20_Instance (SLOT:=SlotIndex,
    ACK:=EventAcknowledgment, CL_TT:=ClearEventBufferFlag,
    CL_COUNT:=ClearCounters, T_EN:=TimeTransferFlag,
    TIME_IN:=InputTimeStructure, INPUT=>OutputBoolArray,
    ND_TT=>NewTimeTagFlag, TT_DATA=>TimeTagDataOutput,
    ND_COUNT=>NewCounterDataFlag,
    CNT_DATA=>CounterValuesArray,
    ND_STAT=>NewStatusDataFlag, STATUS=>EFB_ERTStatus) ;
```

Parameter Description

Description of the input parameters:

Parameter	Data type	Meaning
SLOT	INT	The Slot index is assigned to the EFB ERT_854_20 from either the QUANTUM or DROP EFB and contains the configured input and output references (%IW und %MW).
ACK	BOOL	Event confirmation: Setting ACK signals that the user is ready to receive the next event and deletes the TT_DATA marker. If ACK remains set, "Continuous operation" is executed.
CL_TT	BOOL	Delete the ERT event FIFO buffer by setting CL_TT. Storage of events is blocked until CL_TT is reset to 0.
CL_COUNT	BOOL	Clears all ERT counters by setting CL_COUNT. Counting is interrupted until CL_COUNT is reset to 0.
T_EN	BOOL	Enables a time transfer, that is from the ESI using TIME_IN if set.
TIME_IN	DPM_Time	Structure of the ESI, that is input time through time synchronization of the ERT (carries the edge controlled time synchronization in the Sync element).

Description of output parameters:

Parameter	Data type	Meaning
INPUT	BOOLArr32	Output array for all 32 digital inputs in BOOL format. (Also provided in the form of word references as %IWx and %IWx+1).
ND_TT	BOOL	Marker, new data in TT_DATA structure: remains set until acknowledged by the user with ACK.
TT_DATA	ERT_10_TTag	Event message output structure with time stamp. An event is held and ND_TT is set to 1 until acknowledged by the user with ACK = 1.

Parameter	Data type	Meaning
ND_COUNT	BOOL	Marker, new counter data in CNT_DATA structure: The value 1 is set for only 1 cycle and is not acknowledged.
CNT_DATA	UDIntArr32	Output array for 32 counter values (is overwritten after the EFB has received a complete set of consistent counter values (configured as: 8, 16, 24, or 32).
ND_STAT	BOOL	Marker; new status data in STATUS word: The value 1 is set for only 1 cycle and is not acknowledged.
STATUS	WORD	Output word for EFB/ERT status. For more details, refer to *Data Flow (see page 90)*.

Internal Time Synchronization

Structure of DPM_Time for ERT internal time synchronization, that is through the ESI:

Element	Element type	Meaning
Sync	BOOL	Clock synchronization with positive edge (hourly or on command)
Ms_Lsb	BYTE	Time in milliseconds (least significant byte)
Ms_Msb	BYTE	Time in milliseconds (most significant byte)
Min	BYTE	Invalid time / minutes
Hour	BYTE	Summer time / hours
Day	BYTE	Week day / day of month
Mon	BYTE	Month
Year	BYTE	Year

Event Structure

Event structure of the ERT_10_TTag with 5 Byte time markers (more information can be found in *Data Flow (see page 90)*):

Element	Element type	Meaning
User	BYTE	Complete time/user number [module number]
INPUT	BYTE	Event set type/Number of the first input
In	BYTE	Event data: 1, 2 or 8 scheduled positions
Ms_Lsb	BYTE	Time in milliseconds (least significant byte)
Ms_Msb	BYTE	Time in milliseconds (most significant byte)
Min	BYTE	Invalid time/minutes
Hour	BYTE	Summer time/hours
Day	BYTE	Weekday/Day of the month

Function mode

ERT data transfer

The number of I/O words available on the S908 remote drops is limited to 64 inputs and 64 outputs. For this reason, the number of settable ERT modules per remote drop with the currently selected minimum requirements of 8 input words and 5 output words is limited to 8. There is no quantity limitation of ERT modules in EIO drops.

The size of the required ERT data transfer is considerably larger:

- 32 counters = 64 words,
- an event with a 5 byte time marker = 4 words,
- 32 digital values and the ERT status = 3 words.

These inconsistent size requirements necessitate the use of a special transfer EFB called `ERT_854_20` to execute the required operations on the PLC and to adjust the ERT representation of the data in Multiplex form. This type of EFB is required for every ERT module.

To simplify matters, configure only the EFB parameters which will actually be used. This saves on configuration, particularly when the counter inputs and event inputs get mixed with one another. Memory is not saved because Control Expert fills the outputs with invisible.

Underlying structure of the register block

Underlying structure of the `ERT_854_20` input register block with 8 %IW input words for transfer from the ERT to the PLC:

Contents	Function
Digital inputs 1...16	Digitally processed input data which is cyclically updated (the module's input address corresponds to that of the digital standard input modules, that is inputs 1...16 correspond to bits 15...0)
Digital inputs 17...32	
Transfer status	IN transfer status (TS_IN)
MUX 1	Multiplex data block for block transfer, such as: ● 1 event with 5 byte time marker or ● 2 counter values of maximal configuration 32 or ● 1 status word
MUX 2	
MUX 3	
MUX 4	
RESERVED	Reserved for internal use

Simplified structure of the `ERT_854_20` output register block with 5 %MW output words for the transfer from the PLC to the ERT.

`ERT_854_20` output register block:

Contents	Function
Transfer status	OUT transfer status (TS_OUT)
MUX 1	Time data block for the ERT for the clock synchronization
MUX 2	
MUX 3	
MUX 4	

NOTE: User interfaces are normally the inputs and outputs of the `ERT_854_20` EFB, not the %IW and %MW input/output words.

EFB configuration

EFB connection

The EFB connection to the input and output references (%IW and %QW) is accomplished through a graphic connection to the ERT slot number, in the same way as with analog modules. The currently available QUANTUM and DROP EFBs from the I/O Management library are used as follows:

- QUANTUM for local
- DROP for remote racks

These EFBs transfer an integer index to every specified slot, which points to an internal data structure with the configured values. The module parameters and the ID are stored there, in addition to the addresses and lengths of the assigned input and output references (%IW and %MW).

A significant improvement in the runtime can be achieved by deactivating the QUANTUM or the DROP EFB after the first execution.

Function of CL_TT and CL_COUNT

Setting the input marker CL_TT causes the FIFO buffer event of the ERT to be cleared. Setting the markers for one cycle is sufficient.

Setting the input marker CL_COUNT causes the ERT counter to be cleared by the ERT. Setting the markers for one cycle is sufficient.

Block diagram

Principle structure:

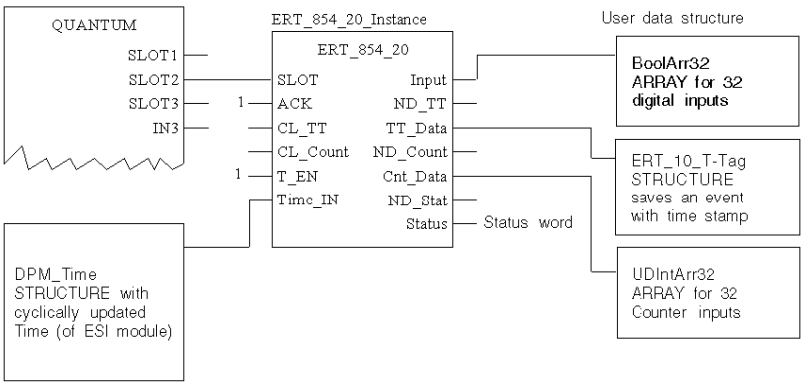

Data Flow

Digital Inputs

No marker for new data is provided for this input type. The digital inputs in the first two input register words are updated directly by the ERT in every PLC cycle. The EFB makes the processed values available as Bool if the `BoolArr32` output field has been configured accordingly.

Counter Inputs

Cyclic updating of the counted values significantly last longer than for other data types. Counted values are saved as a data set in `CNT_DATA` after a complete series (configured as: 8, 16, or 32) of time consistent counted values in multiplex form has been transferred by the ERT. The marker for new data `ND_COUNT` is set for one cycle.

Event Inputs

You need to confirm your readiness to receive new events. Therefore the administration of markers becomes somewhat more complex (a handshake mechanism is required). Event data remains in the data structure `ERT_10_TTag` and the marker for new data `ND_TT` stays set until the `ACK` input is set and a new event thus requested. The EFB responds to this by resetting `ND_TT` for at least one cycle. After the new event has been sent to the `ERT_10_TTag` structure (marker structure), `ND_TT` is reset by the EFB. Reset the `ACK` input after the EFB has reset the `ND_TT` marker so that new event data does not get overwritten. This state can then remain stable to allow the user program enough time for event processing. Each subsequent event tracked with the ERT is temporarily stored within the event FIFO buffer.

New events are sent directly from the internal buffer of the EFB in intervals of at least 2 cycles for as long as the `ACK` input is set (for the special continuous operating mode); the effect is, however, that the `ND_TT` only stays set for one cycle. In this special mode the user program's task is still to terminate event processing before `ND_TT` signals the transfer of other new events to the `ERT_10_TTag` structure as handshake protection by `ACK` is not available in this case.

ERT_10_TTag

`ERT_10_TTag` event structure with 5 byte time marks:

Byte	Bits	Function
1	D0...D6 = Module number 0...127 D7 = CT	Rough time: CT = 1 indicates that this time mark contains the whole time declaration including month and year in bytes 2 + 3. The Module no. can be set in any way in the parameter screen.
2	D0D5 = input number D6 = P1 D7 = P2	Number of the first input of the event group: 1...32 Type of the event message (P2, P1). 1..0.3 see *Note 1:, page 91* [Month value with CT = 1]
3	D0D7 = data from the event group (D7D0 with right alignment)	1, 2 or 8 managed positions [year value, if CT = 1]
4	Time in milliseconds (low value byte)	0...59999 milliseconds (maximum 61100) see *Note 2:, page 91* and *Note 3:, page 92*
5	Time in milliseconds (high value byte)	
6	D0...D5 = minutes D6 = R D7 = TI	Minutes: 0...59 Time invalid: TI = 1 means invalid time/reserved = 0 see *Note 3:, page 92*
7	D0...D4 = hours D5 = R D6 = R D7 = DS	Hours: 0...23 Summer time: DS = 1 indicates that summer time is set With shift SZ -> WZ has hour 2A and id SZ, and hour 2B has id WZ
8	D0...D4 = DOM D5...D7 = DOW	Day of the Month: 1...31 Day of Week: Mon...Sun = 1...7 The day of week corresponds to CET thus it deviates from the standard used in the US (Sun = 1).

Note 1:

Interpretation for byte 2:

D7 D6	Type of event message	D5...D0	Number of the first input of the event group
0 1	1 pin message	1...32	Input pin number
1 0	2 pin message	1, 3, 5...31	First input of the group
1 1	8 pin message	1, 9, 17, 25	First input of the group

Note 2:

The value for the milliseconds is a maximum of 61100 ms with switch seconds (61000 plus a tolerance of 100 milliseconds).

Note 3:

For time markers containing an invalid time (TI = 1), the time in milliseconds is set to FFFF HEX. Minutes, hours and DOW/DOM values are invalid (that is undefined).

Rough time declaration

If the "rough time declaration" has been activated during the ERT configuration, the transfer of the complete time (with month/year) is executed in the following conditions:

- when the month changes,
- after the module restarts,
- during every start or stop of the PLC user program,
- when the event FIFO buffer is deleted,
- when the clock is started or set.

If this rough time declaration is sent without the data input values, "triggering" basically takes place through a correct time stamped event. If this does not happen the values remain "stuck" in the ERT until an event occurs. Within the time mark of a "rough time declaration", the CT bit is set so that byte 2 contains the information about the month, byte 3 the information about the year and bytes 4...8 display the same time mark values of the triggered event whose event message appears immediately after the rough time declaration.

Status Inputs

The marker for new status data `ND_STAT` is set for one cycle. The status inputs can be overwritten after 2 inquiry cycles.

The status word contains EFB and ERT error bits.

Division of the Error Bits

Internal structure of the EFB/ERT status word:

EFB error bits				ERT error bits											
D15	D14	D13	D12	D11	D10	D9	D8	D7	D6	D5	D4	D3	D2	D1	D0

ERT Error Bits

D8...D0 ERT error bits:

Bit	Brief designation	Meaning
D0	FW	Firmware mismatches self test errors within internal memories
D1	FP	Parameterization errors
D2	TE	External time reference error (time-basis signal disrupted or not present)
D3	TU	Time became invalid
D4	TA	Time is not synchronized (Free run mode, permanent run without time error message). Refer to *Without power reserve (see page 96)*.
D5	PF	FIFO buffer overrun (loss of the most recent event data)
D6	PH	FIFO buffer half full
D7	DC	Stabilize active (some event data lost)
D8	CE	ERT communication errors (procedure errors or time out)

When configuring the parameter screen some of these errors can be assigned to grouped error messages with the "F" light as well as the module's error byte within the status table. All other errors are then defined as warnings.

D11...D9 reserved.

EFB Error Bits

D15...D12 EFB error bits:

Bin.	Hex	Meaning
1001	9 HEX	Wrong answer recognized, command (EFB internal error)
1000	8 HEX	EFB communication time out
0101	5 HEX	Wrong slot
0110	6 HEX	Health status bit is not set (ERT appears as not available)
1010	A HEX	CRC checksum error
Other values	–	Internal error

Online error display

The following ERT/EFB error messages are displayed in the **Tools → Diagnostic View** window with a number and explanation.

EFB error messages:

Message	Error	Meaning
-30210	User error 11	Communication time out occurred
-30211	User error 12	Wrong answer recognized, synchronization (EFB internal error)
-30212	User error 13	Wrong packet number detected (EFB internal error)
-30213	User error 14	Wrong field number detected (EFB internal error)
-30214	User error 15	Unexpected time tag (EFB internal error)
-30215	User error 16	Wrong slot data (configuration check required)
-30216	User error 17	Health status bit is not set (ERT appears as not available)
-30217	User error 18	EFB internal command buffer out of bounds
-30218	User error 19	Wrong answer recognized, command (EFB internal error)
-30219	User error 20	ERT error
-30220	User error 21	CRC checksum error

ERT error messages:

Message	Error	Meaning
-30200	User error 1	ERT internal error
...	...	...
-30203	User error 4	ERT internal error
-30204	User error 5	ERT communication timeout
-30205	User error 6	ERT internal error
...	...	...
-30207	User error 8	ERT internal error

Other Functions

Input marker

Setting the input marker `CL_TT` deletes the Event FIFO buffer of the ERT. Setting the marker for one cycle is sufficient.

If the input marker `CL_Count` is set, the ERT counter is deleted by the EFB. Setting the marker for one cycle is sufficient.

Use of the DPM_Time structure for the synchronization of the internal ERT clock

Time synchronization

If the time cannot be synchronized through a standard time receiver, the time information can alternatively be transferred from the 140 ESI 062 01 communication module. The ESI makes the updated time available directly to the EFB in a DPM_Time structure via the TIME_IN parameter.

The data structure can also be filled by the user program and the respective bits can be managed. In this way, the time can be set by the CPU.

With power reserve

As soon as the "clock" parameter of the ERT is configured as an "internal clock" with a power reserve not equal to 0 (that is not free running). The EFB uses the time supplied by the ESI for the synchronization of the internal ERT clock. Until the first synchronization has taken place, the ERT sends back the set Bit "invalid time" in the STATUS output word (Bit 3 TU).

The conditions for the first synchronization of the internal ERT clock via the DPM_Time structure are:

The EFB Parameter T_EN changes from 0 to 1 to enable the time setting.

The time in TIME_IN made available by ESI appears as follows:

- valid (for example, the bit for the message "time invalid" in Min value is not set),
- and the values in Ms change continually.

Should the time data later become invalid or no longer set, then the TU does not switch to 1 until the configured power reserve has expired.

The synchronization/setting of the internal ERT clock takes place via the DPM_Time structure, if:

- EFB-Parameter T_EN is set to 1 to enable the time setting.
- The time data in TIME_IN made available by ESI are valid (for example, the "Time invalid" Bit in the Min value is not set).
- The status of the DPM_Time element Sync changes from 0 to 1. This change is run every full hour by the 140 ESI 062 01 but can also be performed as the result of a suitable telecontrol command.

The precision of the time synchronized by the ESI at the ERT can be influenced by delays, by the PLC cycle time, as well as by the cumulative component, which reflects the differences in the ERT software clock (< 360 milliseconds/hour).

Without power reserve

If the "clock" parameter of the ERT was configured as an "internal clock" in free running mode (with a power reserve of zero), the internal clock starts with a default setting at hour 0 on 1/1/1990. In this case the time can also be provided by using the DPM_Time data structure of the 140 ESI 062 01 module, as described above. As there is no power reserve available for use, the time will not be invalid and the Bit "Time not synchronized" within the STATUS output word (Bit 4 TA), given back by the EFB, is set.

Using the ERT >EFB Time Data Flow

Application examples

This section presents an internal function which is made available through the ERT for diagnostics and development. It covers the cyclic transfer of the ERT internal time to the corresponding EFB in greater intervals. This time application can be used to display or set the PLC clock etc, regardless of whether it comes from the free-running internal clock or was synchronized through an external reference clock signal. The time appears as a `DPM_Time` structure beginning with word 4 of the IN register block of the ERT. The following diagram shows the program elements involved in selection.

Commissioning information

An `ERT_854_20` was assigned the IN references %IW1...%IW3 during I/O addressing. The IN transfer status (TS_IN) in the third word of the register block is sent to an OR block. A `DPM_Time` structure is defined within the variable editor as Variable Mux_IN in the fourth word of the IN register block, and therefore has the address %IW4...%IW8. This variable is sent to the `MOVE` block as an entry. The `MOVE` block output is a `DPM_Time` structure defined by the variable editor as variable `ERT_Time`.

Typical recording mechanism for ERT time data:

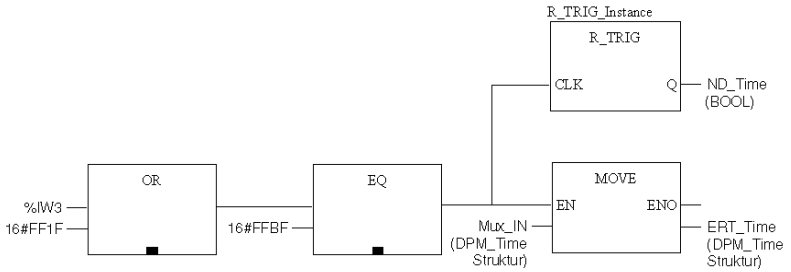

NOTE: The `ERT_854_20` EFB must be active and error free.

Explanation:

The `MOVE` block transfers the time data cyclically stored in the MUX zone of the IN register block to the `DPM_Time` structure `ERT_Time` belonging to the user as soon as the `OR` and the `EQ` block signals a time data transfer. `R_TRIG` makes a signal in `ND_Time` available for further processing of the time data available for one cycle. The `BOOL Sync` element value of the `ERT_Time` should begin to "tick" during each new transfer from the ERT. There is a new transfer after a maximum of each 200 PLC cycles.

Section 10.4
NI_DROP: Configuring an I/O station rack

Description

Function Description

The function block is used to edit the configuration data of a remote I/O station (in safety configuration) for subsequent processing by module configuration EFBs.

To configure an I/O station rack, the `NI_DROP` function block in the configuration section *(see EcoStruxure™ Control Expert, I/O Management, Block Library)* is connected to the corresponding `SLOT` output of the `NI_QUANTUM` *(see page 101)* function block. The number of the I/O station defined in the I/O map has to be entered at the `NUMBER` input of the `NI_DROP` function block. The function blocks for 140 ERT 854 20 module of the I/O stations are connected to the `SLOT` outputs.

`EN` and `ENO` can be configured as additional parameters.

Representation in FBD

Representation:

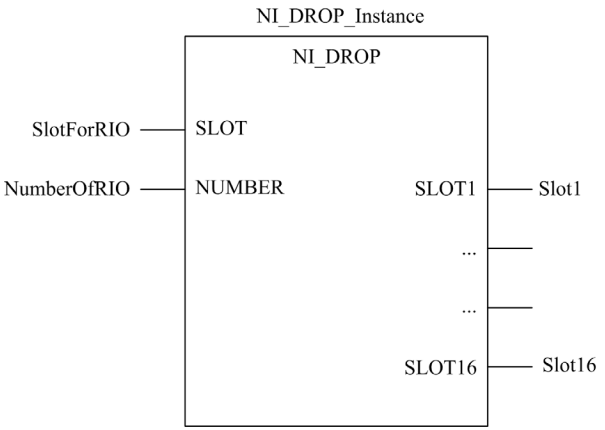

Representation in LD

Representation:

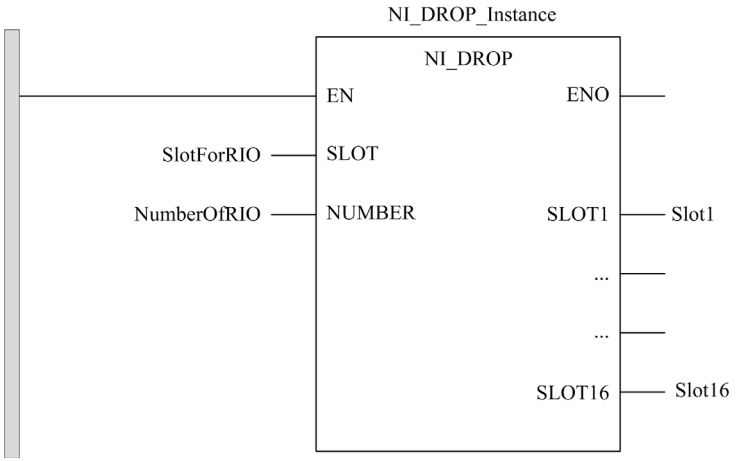

Representation in IL

Representation:

```
CAL NI_DROP_Instance (SLOT:=SlotForRIO,
    NUMBER:=NumberOfRIO, SLOT1=>Slot1,
    SLOT2=>Slot2, SLOT3=>Slot3, SLOT4=>Slot4, SLOT5=>Slot5,
    SLOT6=>Slot6, SLOT7=>Slot7, SLOT8=>Slot8, SLOT9=>Slot9,
    SLOT10=>Slot10, SLOT11=>Slot11, SLOT12=>Slot12,
    SLOT13=>Slot13, SLOT14=>Slot14, SLOT15=>Slot15,
    SLOT16=>Slot16)
```

Representation in ST

Representation:

```
NI_DROP_Instance (SLOT:=SlotForRIO,
    NUMBER:=NumberOfRIO, SLOT1=>Slot1,
    SLOT2=>Slot2, SLOT3=>Slot3, SLOT4=>Slot4, SLOT5=>Slot5,
    SLOT6=>Slot6, SLOT7=>Slot7, SLOT8=>Slot8, SLOT9=>Slot9,
    SLOT10=>Slot10, SLOT11=>Slot11, SLOT12=>Slot12,
    SLOT13=>Slot13, SLOT14=>Slot14, SLOT15=>Slot15,
    SLOT16=>Slot16) ;
```

Parameter Description

Description of input parameters:

Parameter	Data type	Meaning
SLOT	INT	Slot for RIO
NUMBER	DINT	Number of RIO

Description of output parameters:

Parameter	Data type	Meaning
SLOT1	INT	Slot 1
:	:	:
SLOT16	INT	Slot 16

Section 10.5
NI_QUANTUM: Configuring a main rack

Description

Function Description

The function block is used to edit the configuration data of a Quantum main rack (in safety configuration) for subsequent use by the scaling EFBs.

To configure a Quantum main rack, the `NI_QUANTUM` function block is inserted into the configuration section *(see EcoStruxure™ Control Expert, I/O Management, Block Library)*. The function block `NI_ERT_ 854_20` *(see page 105)* for the configuration of 140 ERT 854 20 module or the `NI_DROP` *(see page 98)* function block for the remote I/O station are connected at its `SLOT` outputs.

`EN` and `ENO` can be configured as additional parameters.

Representation in FBD

Representation:

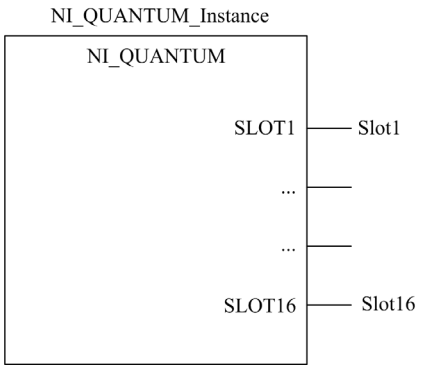

Representation in LD

Representation:

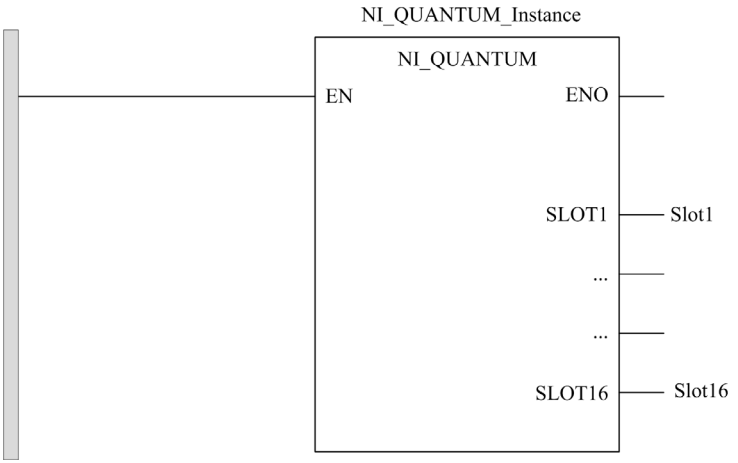

Representation in IL

Representation:

```
CAL NI_QUANTUM_Instance (SLOT1=>Slot1, SLOT2=>Slot2,
    SLOT3=>Slot3, SLOT4=>Slot4, SLOT5=>Slot5, SLOT6=>Slot6,
    SLOT7=>Slot7, SLOT8=>Slot8, SLOT9=>Slot9,
    SLOT10=>Slot10, SLOT11=>Slot11, SLOT12=>Slot12,
    SLOT13=>Slot13, SLOT14=>Slot14, SLOT15=>Slot15,
    SLOT16=>Slot16)
```

Representation in ST

Representation:

```
NI_QUANTUM_Instance (SLOT1=>Slot1, SLOT2=>Slot2,
    SLOT3=>Slot3, SLOT4=>Slot4, SLOT5=>Slot5, SLOT6=>Slot6,
    SLOT7=>Slot7, SLOT8=>Slot8, SLOT9=>Slot9,
    SLOT10=>Slot10, SLOT11=>Slot11, SLOT12=>Slot12,
    SLOT13=>Slot13, SLOT14=>Slot14, SLOT15=>Slot15,
    SLOT16=>Slot16) ;
```

Parameter Description

Description of output parameters:

Parameter	Data type	Meaning
SLOT1	INT	Slot 1
:	:	:
SLOT16	INT	Slot 16

Section 10.6
NI_ERT_854_20: Data transfer EFB

Introduction

This chapter describes the `NI_ERT_854_20` block.

What Is in This Section?

This section contains the following topics:

Topic	Page
Description	105
Function Mode	110
EFB Configuration	112
Data Flow	113

Description

Function Description

The NI_ERT_854_20 EFB provides a software interface to the 140 ERT 854 20 module (in a safety configuration) which gives you simple access of the functions such as time stamp and status.

NOTE:
When using the 140 ERT 854 20 in a safety configuration:
- Time synchronization of the 140 ERT 854 20 module with CPU using DPM_Time structure is not possible and
- Counting feature is not available.

The NI_ERT_854_20 EFB coordinates the flow of multiplex data from the ERT module to the PLC using the input and output registers. A marker "New data" is always set for every data type if the input data type in the corresponding EFB output structure was copied.

As additional parameters, EN and ENO can be configured.

Inconsistency Between EFB Output and %IW Data

In general, the %IW data correspond to the EFB output pin named INPUT.

For a few scans after starting PLC, the EFB output is inconsistent with the %IW data. This is due to the implemented handshake mechanisms in communication between the NI_ERT_854_20 EFB and the ERT hardware.

NOTE: In case the EFB reports a detected communication error, the %IW data are not updated by the ERT hardware.
Do not use %IW data if the EFB returns ENO = false.

Appearance in FBD

Representation:

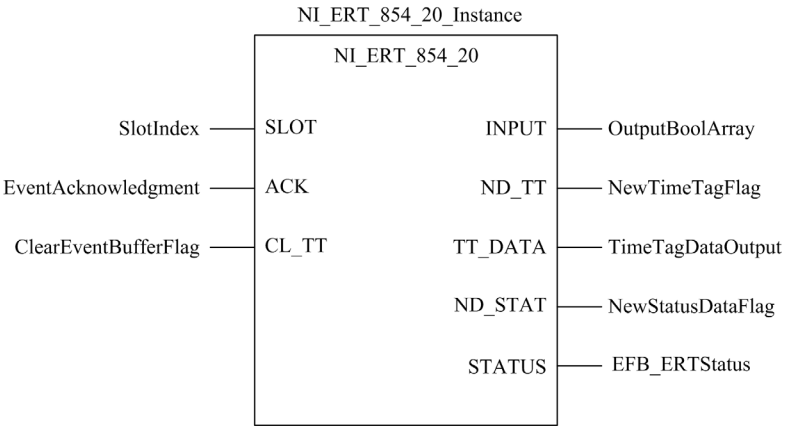

Appearance in LD

Representation:

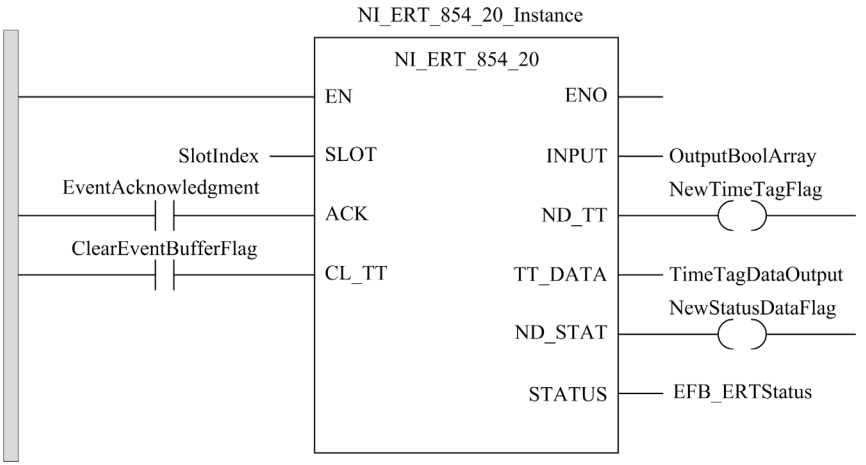

Appearance in IL

Appearance:

```
CAL NI_ERT_854_20_Instance (SLOT:=SlotIndex,
    ACK:=EventAcknowledgment, CL_TT:=ClearEventBufferFlag,
    INPUT=>OutputBoolArray, ND_TT=>NewTimeTagFlag,
    TT_DATA=>TimeTagDataOutput, ND_STAT=>NewStatusDataFlag,
    STATUS=>EFB_ERTStatus)
```

Appearance in ST

Appearance:

```
NI_ERT_854_20_Instance (SLOT:=SlotIndex,
    ACK:=EventAcknowledgment, CL_TT:=ClearEventBufferFlag,
    INPUT=>OutputBoolArray, ND_TT=>NewTimeTagFlag,
    TT_DATA=>TimeTagDataOutput, ND_STAT=>NewStatusDataFlag,
    STATUS=>EFB_ERTStatus) ;
```

Parameter Description

Description of the input parameters:

Parameter	Data type	Meaning
SLOT	INT	The Slot index is assigned to the EFB NI_ERT_854_20 from either the NI_QUANTUM or NI_DROP EFB and contains the configured input and output references (%IW and %MW).
ACK	BOOL	Event confirmation: Setting ACK signals that the user is ready to receive the next event and deletes the TT_DATA marker. If ACK remains set, "Continuous operation" is executed.
CL_TT	BOOL	Delete the ERT event FIFO buffer by setting CL_TT. Storage of events is blocked until CL_TT is reset to 0.

Description of output parameters:

Parameter	Data type	Meaning
INPUT	ARRAY [0..31] OF BOOL	Output array for all 32 digital inputs in BOOL format. (Also provided in the form of word references as %IWx and %IWx+1).
ND_TT	BOOL	Marker, new data in TT_DATA structure: remains set until acknowledged by the user with ACK.
TT_DATA	ARRAY [0..7] OF BYTE	Event message output array with time stamp. An event is held and ND_TT is set to 1 until acknowledged by the user with ACK = 1.

Parameter	Data type	Meaning
ND_STAT	BOOL	Marker; new status data in STATUS word: The value 1 is set for only 1 cycle and is not acknowledged.
STATUS	WORD	Output word for EFB/ERT status. For more details, refer to *Status input* *(see page 114)*.

⚠ CAUTION

UNEXPECTED APPLICATION BEHAVIOR

- Do not use the NI_ERT_584_20 EFB inside a DFB.
- Do not modify the values of the output parameters TT_DATA and INPUT in the application after the execution of the EFB NI_ERT_854_20 in the cycle.

Failure to follow these instructions can result in injury or equipment damage.

To modify the values of output parameters TT_DATA and INPUT in the application after the execution of the EFB, first make a copy of these values in other PLC variables. Then make the modifications.

TT_DATA: Event Message Output Array

Event message output array TT_DATA with 5 byte time markers:

Parameter [Byte]	Meaning	Bits	Function
TT_DATA[0]	Complete time/user number [module number]	D0...D6 = Module number 0...127 D7 = CT	Rough time: CT = 1 indicates that this time mark contains the whole time declaration including month and year in bytes 2 + 3. The module no. can be set in any way in the parameter screen.
TT_DATA[1]	Event set type/Number of the first input	D0D5 = input number D6 = P1 D7 = P2	Number of the first input of the event group: 1...32 Type of the event message *(see page 107)* (P2, P1). 1..0.3. [Month value with CT = 1]
TT_DATA[2]	Event data: 1, 2 or 8 scheduled positions	D0D7 = data from the event group (D7D0 with right alignment)	1, 2 or 8 managed positions [year value if CT = 1]

(1) The value for the milliseconds is a maximum of 61100 ms with switch seconds (61000 plus a tolerance of 100 milliseconds).
(2) For time markers containing an invalid time (TI = 1), the time in milliseconds is set to FFFF HEX. Minutes, hours, and DOW/DOM values are invalid (that is undefined).

Parameter [Byte]	Meaning	Bits	Function
TT_DATA[3]	Time in milliseconds (least significant byte)	Time in milliseconds (low value byte)	0...59999 milliseconds (maximum 61100)(1) (2).
TT_DATA[4]	Time in milliseconds (most significant byte)	Time in milliseconds (high value byte)	
TT_DATA[5]	Invalid time/minutes	D0...D5 = minutes D6 = R D7 = TI	Minutes: 0...59 Time invalid: TI = 1 means invalid time/reserved = 0(2).
TT_DATA[6]	Summer time/hours	D0...D4 = hours D5 = R D6 = R D7 = DS	Hours: 0...23 Summer time: DS = 1 indicates that summer time is set With shift SZ -> WZ has hour 2A and id SZ, and hour 2B has id WZ
TT_DATA[7]	Weekday/Day of the month	D0...D4 = DOM D5...D7 = DOW	Day of the month: 1...31 Day of week: Mon...Sun = 1...7 The day of week corresponds to CET thus it deviates from the standard used in the US (Sun = 1).

(1) The value for the milliseconds is a maximum of 61100 ms with switch seconds (61000 plus a tolerance of 100 milliseconds).
(2) For time markers containing an invalid time (TI = 1), the time in milliseconds is set to FFFF HEX. Minutes, hours, and DOW/DOM values are invalid (that is undefined).

Type of Event Message

Interpretation for second byte of the array (TT_DATA[1]):

D7 D6	Type of event message	D5...D0	Number of the first input of the event group
0 1	1-pin message	1...32	Input pin number
1 0	2-pin message	1, 3, 5...31	First input of the group
1 1	8-pin message	1, 9, 17, 25	First input of the group

Function Mode

ERT Data Transfer

The number of I/O words available on the S908 remote drops is limited to 64 inputs and 64 outputs. For this reason, the number of settable ERT modules per remote drop with the currently selected minimum requirements of 8 input words and 5 output words is limited to 8. There is no quantity limitation of ERT modules in EIO drops.

The size of the required ERT data transfer is considerably larger:

- 32 counters = 64 words,
- an event with a 5 byte time marker = 4 words,
- 32 digital values and the ERT status = 3 words.

These inconsistent size requirements necessitate the use of a special transfer EFB called `NI_ERT_854_20` to execute the required operations on the PLC and to adjust the ERT representation of the data in multiplex form. This type of EFB is required for every ERT module.

To simplify matters, configure only the EFB parameters which will actually be used. This saves on configuration, particularly when the counter inputs and event inputs get mixed with one another. Memory is not saved because Control Expert fills the outputs with invisible.

Underlying Structure of the Register Block

Underlying structure of the `NI_ERT_854_20` input register block with 8 %IW input words for transfer from the ERT to the PLC:

Contents	Function
Digital inputs 1...16	Digitally processed input data which is cyclically updated (the input address of the module corresponds to that of the digital standard input module that is inputs 1...16 correspond to bits 15...0)
Digital inputs 17...32	
Transfer status	IN transfer status (TS_IN)
MUX 1	Multiplex data block for block transfer, such as: ● 1 event with 5 byte time marker or ● 2 counter values of maximal configuration 32 or ● 1 status word
MUX 2	
MUX 3	
MUX 4	
RESERVED	Reserved for internal use

Simplified structure of the `NI_ERT_854_20` output register block with 5 %MW output words for the transfer from the PLC to the ERT.

`NI_ERT_854_20` output register block:

Contents	Function
Transfer status	OUT transfer status (TS_OUT)
MUX 1	Time data block for the ERT for the clock synchronization
MUX 2	
MUX 3	
MUX 4	

NOTE: User interfaces are normally the inputs and outputs of the `NI_ERT_854_20` EFB, not the %IW, and %MW input/output words.

EFB Configuration

EFB Connection

The EFB connection to the input and output references (%IW and %QW) is accomplished through a graphic connection to the ERT slot number. The currently available `NI_QUANTUM` and `NI_DROP` EFBs from the safety library are used as follows:

- `NI_QUANTUM` for local
- `NI_DROP` for remote racks

These EFBs transfer an integer index to every specified slot, which points to an internal data structure with the configured values. The module parameters and the ID are stored there, in addition to the addresses and lengths of the assigned input and output references (%IW and %MW).

A significant improvement in the runtime can be achieved by deactivating the `NI_QUANTUM` or the `NI_DROP` EFB after the first execution.

Function of `CL_TT`

Setting the input marker `CL_TT` causes the FIFO buffer event of the ERT to be cleared. Setting the markers for one cycle is sufficient.

Block Diagram

Principle structure:

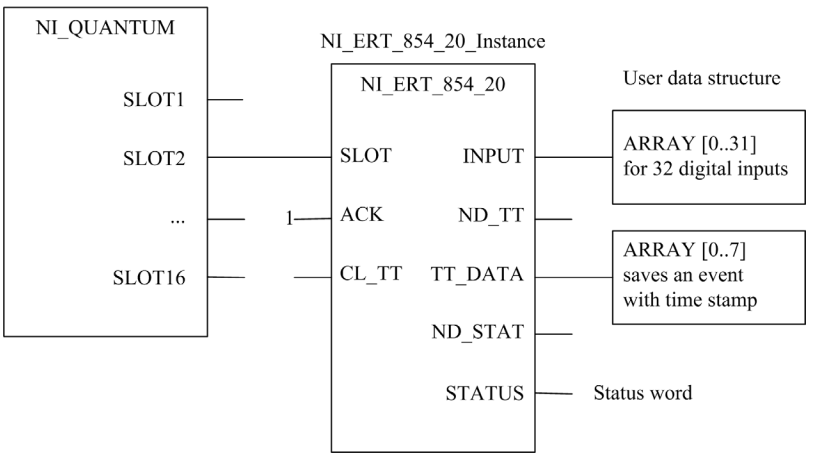

Data Flow

Digital Inputs

No marker for new data is provided for this input type. The digital inputs in the first two input register words are updated directly by the ERT in every PLC cycle. The NI_ERT_854_20 EFB makes the processed values available as BOOL in the array of the output parameter `INPUT`.

Event Inputs

You need to confirm your readiness to receive new events. Therefore the administration of markers becomes more complex (a handshake mechanism is required). Event data remains in the event message output array `TT_DATA` and the marker for new data `ND_TT` stays set until the `ACK` input is set and a new event thus requested. The EFB responds to this by resetting `ND_TT` for at least one cycle. After the new event has been sent to the event message output array `TT_DATA`, `ND_TT` is reset by the EFB. Reset the `ACK` input after the EFB has reset the `ND_TT` marker so that new event data does not get overwritten. This state can then remain stable to allow the user program enough time for event processing. Each subsequent event tracked with the ERT is temporarily stored within the event FIFO buffer.

New events are sent directly from the internal buffer of the EFB in intervals of at least two cycles for as long as the `ACK` input is set (for the special continuous operating mode); the effect is, however, that the `ND_TT` only stays set for one cycle. In this special mode, the user program's task is still to terminate event processing before `ND_TT` signals the transfer of other new events to the event message output `TT_DATA` as handshake protection by `ACK` is not available in this case.

Rough Time Declaration

If the "rough time declaration" has been activated during the ERT configuration, the transfer of the complete time (with month/year) is executed in the following conditions:

- when the month changes,
- after the module restarts,
- during every start or stop of the PLC user program,
- when the event FIFO buffer is deleted,
- when the clock is started or set.

If this rough time declaration is sent without the data input values, "triggering" basically takes place through a correct time stamped event. If this does not happen the values remain "stuck" in the ERT until an event occurs. Within the time mark of a "rough time declaration", the CT bit is set so that byte 2 contains the information about the month, byte 3 the information about the year and bytes 4...8 display the same time mark values of the triggered event whose event message appears immediately after the rough time declaration.

Status Inputs

The marker for new status data `ND_STAT` is set for one cycle. The status inputs can be overwritten after two inquiry cycles.

The status word contains EFB and ERT error bits.

Division of the Error Bits

Internal structure of the EFB/ERT status word:

EFB error bits				ERT error bits											
D15	D14	D13	D12	D11	D10	D9	D8	D7	D6	D5	D4	D3	D2	D1	D0

ERT Error Bits

D8...D0 ERT error bits:

Bit	Brief designation	Meaning
D0	FW	Firmware mismatches self-test errors within internal memories
D1	FP	Parameterization errors
D2	TE	External time reference error (time-basis signal disrupted or not present)
D3	TU	Time became invalid
D4	TA	Time is not synchronized (Free run mode, permanent run without time error message).
D5	PF	FIFO buffer overrun (loss of the most recent event data)
D6	PH	FIFO buffer half full
D7	DC	Stabilize active (some event data lost)
D8	CE	ERT communication errors (procedure errors or time-out)

When configuring the parameter screen some of these errors can be assigned to grouped error messages with the "F" light as well as the module’s error byte within the status table. All other errors are then defined as warnings.

D11...D9 reserved.

EFB Error Bits

D15...D12 EFB error bits:

Bin.	Hex	Meaning
1001	9 HEX	Wrong answer recognized, command (EFB internal error)
1000	8 HEX	EFB communication time out
0101	5 HEX	Wrong slot
0110	6 HEX	Health status bit is not set (ERT appears as not available)
1010	A HEX	CRC checksum error
Other values	–	Internal error

Part IV
TSXNTP100 Supporting Module

Chapter 11
TSXNTP100 Supporting Module

What Is in This Chapter?

This chapter contains the following topics:

Topic	Page
Introduction	120
Module Cabling	121
Technical Data	122
Time Synchronization	123
Configuration Window	124

Introduction

Module Overview

The 140 ERT 854 20 module is capable of supporting time reference module TSXNTP100. TSXNTP100 will be the suitable time reference for the 140 ERT 854 20 in place of DCF77 or IRIG-B references.

The TSXNTP100 provides time output signal to 140 ERT 854 20 through an RS485 interface and the serial signal configuration is hard coded and not configurable. The time signal is set to 9765 baud, 8 data bits, 1 stop bit and no parity. The NTP100 sends a local time reference signal to attached devices at a rate of 1/sec. The ERT85420, the attached device, can resolve input state changes to 1 ms using the local time reference from the NTP100 as its baseline. When the ERT85420 and the NTP100 are connected, the ERT will synchronize to the NTP time reference within 3 seconds.

Module Cabling

Overview

This section describes the connection of TSXNTP100, reference voltage and external input signals with 140 ERT 854 20.

TSXNTP100

The process inputs of 140 ERT 854 20 are connected to 32 binary switches and standard time input is connected to TSXNTP100 RS485 output. The standard time input channel is same for RS485 output of IRIG-B and TSXNTP100. The following wiring diagram shows the connection:

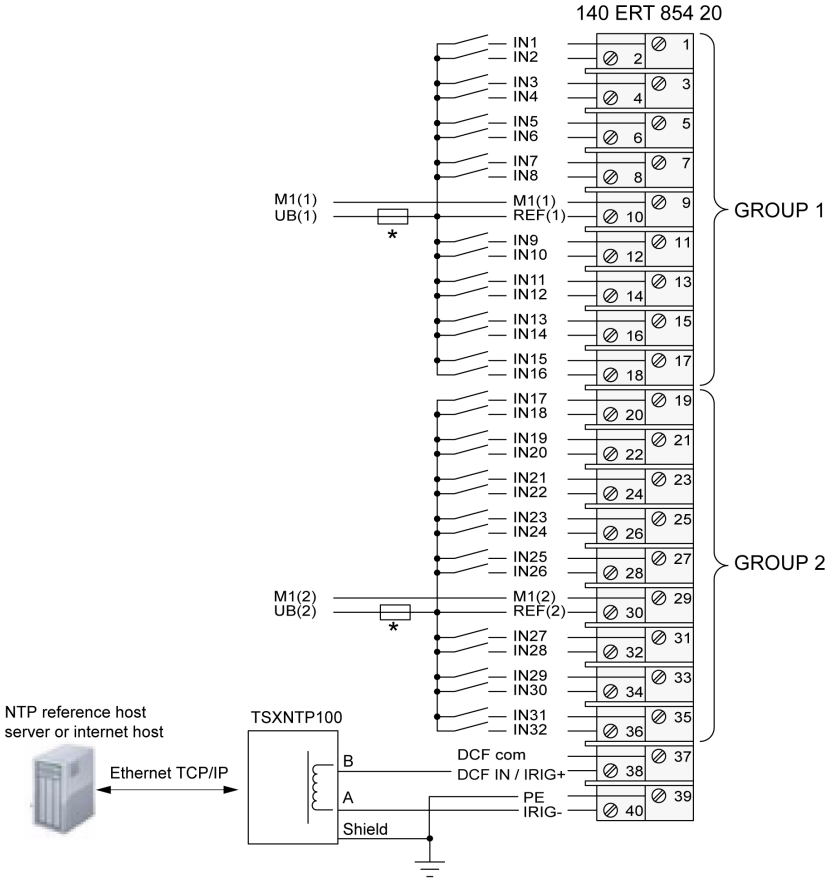

* UB(1), UB(2):24...125 VDC separate protection recommended

Technical Data

Electrical Specification

Data for the TSXNTP100:

Channel number	1 for TSXNTP100 RS485 output
Input voltage	5 VDC RS485 differential input
Maximum input rating	-7...12 V V_{ICM}
Mark condition	V_{ID} > +0.2 V
Space condition	V_{ID} < -0.2 V
Carrier	No
Bit rate	9765 baud rate
Time stamp resolution	1 ms
Current consumption	1 unit load for TSXNTP100 RS485
Potential isolation type	Opto-coupler
Clock input-bus isolation	700 VAC for 1 min.
Clock input-process input isolation	1780 VAC for 1 min.

⚠ CAUTION

MODULE DAMAGE

Never use the ERT module without a proper reference voltage to avoid damage to the module.

Failure to follow these instructions can result in injury or equipment damage.

Time Synchronization

Time Synchronization Standard Time

When TSXNTP100 is connected to 140 ERT 854 20 module and the 140 ERT 854 20 module is restarted, the software clock is synchronized within 3 seconds of receiving the first information. After this, the ERT software clock time matches the standard time sender. If the sent signal becomes unavailable, then the free running software clock can still be used but is not as precise.

The following diagram shows the 140 ERT 854 20 module status during time synchronization process with TSXNTP100.

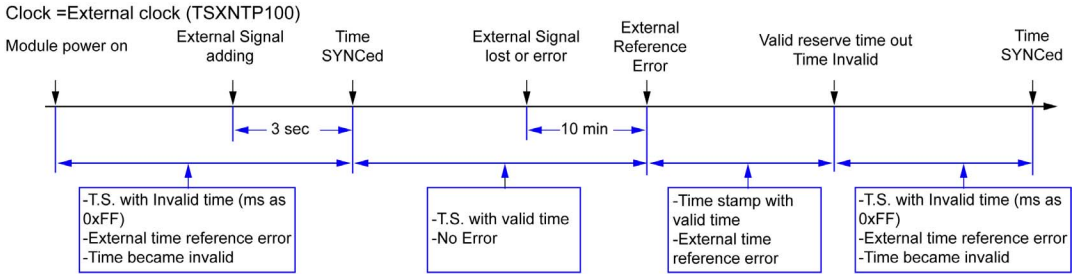

Configuration Window

Parameter Configuration Window

The following table provides an overview of the general module parameters and their default values:

Name	Default value	Options	Meaning
MODULE:			
MODULE NUMBER	0	1...127	User defined, inserted in event message. The uniqueness of the value is not checked. If 0 = Default, no selection made.
CLOCK	DCF/GPS-Clock	DCF/GPS Clock	External synchronization in DCF77 format by the DCF or GPS clock.
		IRIG-B/GPS Clock	External synchronization in IRIG-B format.
		Internal Clock	Telegram synchronization. The clock runs either without monitoring or is monitored within a validity reserve.
		No	Internal clock is deactivated.
		TSNXTP100	External synchronization by TSXNTP100 module.

NOTE: The TSXNTP100 can also be configured through the embedded web pages. Diagnostics are provided through the embedded web pages. The web pages also permit NTP host configuration including time zone, and diagnostic monitoring of time quality.

Index

0-9

140ERT85420, *15*

A

addressing
    flat, *51*, *52*
    topological, *51*

B

binary inputs, *17*
bit order for discrete I/O, *51*

C

cabling, *35*
cold start, *63*
counting values, *17*

D

data storage, *63*
debouncing, *17*
dechattering, *17*
default values, *57*

E

event logging, *17*

I

inputs, *15*
internal clock
    EFB synchronized, *27*

M

mounting, *35*, *39*

P

processing sequence, *17*

R

reference voltage, *35*

T

time base
    DCF, *27*
    GPS, *27*
    IRIG-B, *27*

W

warm start, *63*