Modicon Quantum automation platform

Catalog

November 2015

Schneider Electric

How can you fit a 6000-page catalog in your pocket ?

Schneider Electric provides you with the complete set of industrial automation catalogs all on a handy USB key for PC or in an application for tablets

Digi-Cat, a handy USB key for PC

- Convenient to carry
- Always up-to-date
- Environmentally friendly
- Easy-to-share format

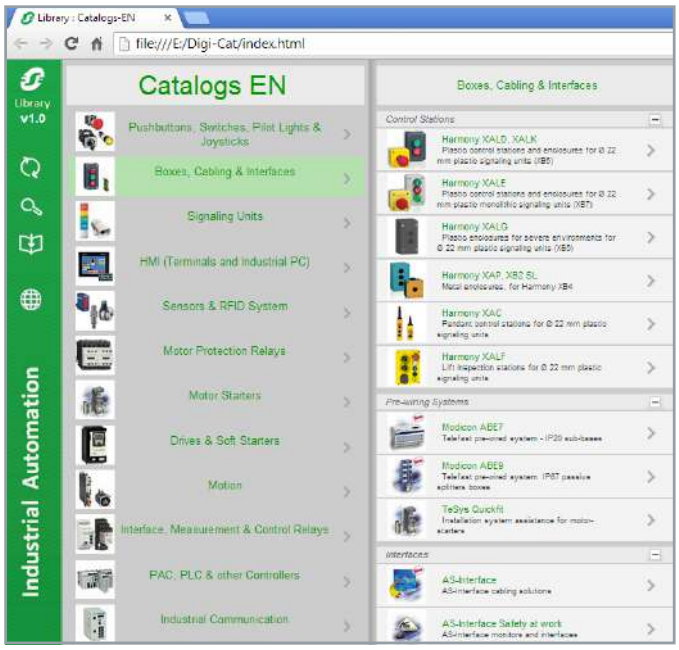

Contact your local representative to get your own Digi-Cat

e-Library, the app for tablets

If you have an iPad®:

- Go to the App Store and search for e-Library
- or scan the QR code

If you have an Android tablet:

- Go to the Google Play Store™ and search for eLibrary
- or scan the QR code

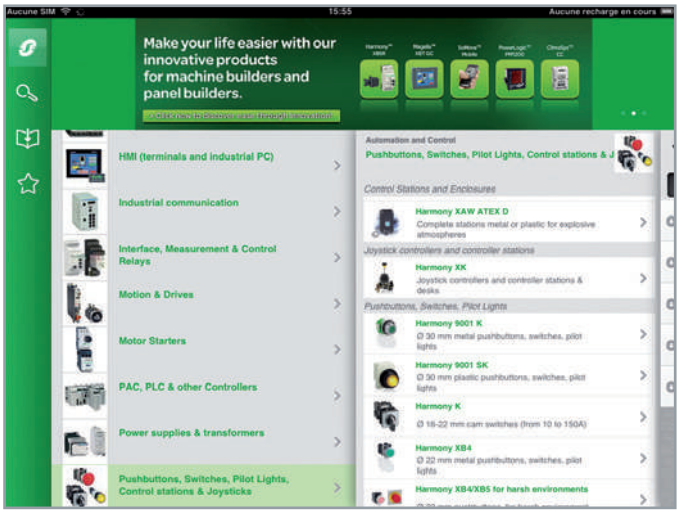

General contents

Modicon Quantum standard CPUs, racks and power supplies 1

I/O architectures and Hot Standby architectures 2

Discrete and analog I/O modules 3

Application-specific modules and solutions 4

Communication 5

Quantum safety architectures 6

I/O prewired systems and process power supplies 7

Appendices and services 8

Modicon Quantum automation platform

To the world of Schneider Electric

Presentation

This catalogue presents the range of Modicon Quantum PLCs and includes new products, such as CPUs, power supplies and communication modules, which extend the field of application of the range in the various standard and safety industrial application areas.

With an already wide selection of I/O modules, and an already extensive offer in terms of communication on fieldbuses and networks, Modicon Quantum is even better suited to the needs of continuous or semi-continuous industrial processes and control of large infrastructure sites.

Capitalizing as it does on more than 25 years' experience in redundant processing architectures, and fully meeting safety requirements for people, production installations and their environment, Modicon Quantum is the ideal solution for applications requiring maximum availability in complete safety.

Applications

The Modicon Quantum offer is, de facto, inherently designed for high availability applications in the areas below:

- Petrochemicals
- Metallurgy
- Cement
- Energy
- Tunnels
- Airports
- Water treatment
- Mines
- Hydropower

Contents

1 - Quantum standard CPUs, racks and power supplies

Unity Pro CPUs

Unity Pro standard CPUs selection guide . . . . . *page 1/2*

- **Unity Pro standard CPUs**
  - Presentation ..... *page 1/6*
  - Description ..... *page 1/8*
  - Memory structure ..... *page 1/10*
  - References ..... *page 1/12*
- **PCMCIA memory expansion cards**
  - Presentation ..... *page 1/14*
  - References ..... *page 1/15*

Racks

- **Presentation, description** ..... *page 1/16*
- **References** ..... *page 1/17*

Power supply modules

Power supply module selection guide . . . . . *page 1/18*

- **Presentation, functions** ..... *page 1/20*
- **Description** ..... *page 1/21*
- **References** ..... *page 1/21*

Modicon Quantum automation platform

Unity Pro standard CPUs

Automation platform for Unity Pro software offer			Simple applications	Simple and complex applications
Number of racks 3/4/6/10/16 slots	Local I/O		2 racks (1 main + 1 expansion)	
	Remote I/O (RIO)		31 drops of 2 racks	
Maximum discrete I/O *(1)*	Local I/O		No limit (max. 27 slots)	
Maximum analog I/O *(1)*	Local I/O		No limit (max. 27 slots)	
Application-specific modules			High-speed counter, interrupt inputs, serial link, accurate time stamping	
Number of communication modules and axes (in local rack)	Ethernet TCP/IP, Modbus Plus, Profibus DP, Sy/Max Ethernet, SERCOS, all combinations		2	6
Bus connections	Modbus		2 integrated RS 232 Modbus RTU/ASCII ports	
	AS-Interface actuator/sensor bus		Limited number: 4 on local rack, 4 on remote rack (RIO)	
	Profibus DP *(2)*		2 “option” modules on local rack	6 “option” modules on local rack
Network connections	Modbus Plus		1 integrated port, 2 “option” modules on local rack	1 integrated port, 6 “option” modules on local rack *(3)*
	Ethernet TCP/IP		2 “option” modules on local rack	6 “option” modules on local rack
	USB		–	
Redundancy			Power supplies, remote I/O network, Modbus Plus modules, Ethernet TCP/IP modules, Profibus module	
Hot Standby			–	
Application structure	Master task		1 cyclic/periodic	
	Fast task		1 periodic	
	Auxiliary tasks		0	
	Interrupt tasks	Max. number	128	
		I/O interrupt	64	
		Timer interrupt	16	
Number of Kinstructions executed per ms	100% Boolean		1.86 Kinst/ms	
	65% Boolean and 35% numerical		2.49 Kinst/ms	
Memory capacity without PCMCIA card	IEC program and data		548 KB	1056 KB
Memory expansion with PCMCIA card	Program		–	
	Data		–	
	File storage		–	
Bus current required			1800 mA	
Functional safety certification			–	
Approvals			UL 508, CSA 22.2-142, FM Class 1 Div 2, CE, ATEX Zone 2/22 *(5)*	
Type of Quantum CPU			**140CPU31110**	**140CPU43412U**
Page			1/12	

(1) The maximum values for the number of discrete I/O and analog I/O depend on the topologies used (remote I/O, distributed I/O, etc.). For more information, please consult our website www.schneider-electric.com.
(2) Profibus DP module by our partner Prosoft (Collaborative Automation Partner Program).
(3) Modbus Plus modules: Only the first 2 of the 6 modules feature the full range of functions.

Complex applications			
2 racks (1 main + 1 expansion)			
31 drops of 2 racks (1 main + 1 expansion)			
No limit (max. 26 slots)			
No limit (max. 26 slots)			
High-speed counter, interrupt inputs, serial link, accurate time stamping			
6			
1 integrated RS 232/485 Modbus RTU/ASCII port			
Limited number: 4 on local rack, 4 on remote rack (RIO)			
6 “option” modules on local rack			
1 integrated port, 6 “option” modules on local rack *(3)*			
1 integrated port (10BASE-T/100BASE-TX), 6 “option” modules on local rack *(4)*			
1 port reserved for programming PC			
Power supplies, remote I/O network, Modbus Plus modules, Ethernet TCP/IP modules, Profibus module			
–			
1 cyclic/periodic			
1 periodic			
4			
128			
128			
32			
10.28 Kinst/ms			
10.07 Kinst/ms			
768 KB	1024 KB	3072 KB	11 MB
Up to 7168 KB			Up to 11264 KB
512 KB	1024 KB	3072 KB	1536 KB
8 MB (PCMCIA expansion in CPU slot no. 0 and/or no. 1)			
2160 mA	2760 mA		
–			
UL 508, CSA 22.2-142, FM Class 1 Div 2, CE, ATEX Zone 2/22 *(5)*			
140CPU65150	**140CPU65160**	**140CPU65260**	**140CPU65860**
1/12			

(4) With a maximum of a network head adaptor with integral router (140NOC78100).
(5) Only Conformal Coating versions are ATEX Zone 2/22 certified. For more information, see pages 8/2 to 8/9.

Modicon Quantum automation platform

Unity Pro Hot Standby CPUs

Automation platform for Unity Pro software offer		Applications with redundancy (Hot Standby)		Applications with redundancy (Hot Standby)		
Number of racks 3/4/6/10/16 slots	Local I/O	–		–		
	Remote I/O (RIO)	31 drops of 2 racks (1 main + 1 expansion)		31 drops of 2 racks (1 main + 1 expansion)		
Maximum discrete I/O *(1)*	Local I/O	–		–		
Maximum analog I/O *(1)*	Local I/O	–		–		
Application-specific modules		High-speed counter, interrupt inputs, serial link, accurate time stamping		High-speed counter, interrupt inputs, serial link, accurate time stamping		
Number of communication modules and axes (in local rack)	Ethernet TCP/IP, Modbus Plus, Profibus DP, Sy/Max Ethernet, SERCOS, all combinations	6		6		
Bus connections	Modbus	1 integrated RS 232/485 Modbus RTU/ASCII port		1 integrated RS 232/485 Modbus RTU/ASCII port		
	AS-Interface actuator/sensor bus	Limited number: 4 on local rack, 4 on remote rack (RIO)		Limited number: 4 on local rack, 4 on remote rack (RIO)		
	Profibus DP *(2)*	6 “option” modules on local rack		6 “option” modules on local rack		
Network connections	Modbus Plus	1 integrated port, 6 “option” modules on local rack *(3)*		1 integrated port, 6 “option” modules on local rack *(3)*		
	Ethernet TCP/IP	1 integrated 100BASE-FX Hot Standby multimode port *(4)*, 6 “option” modules on local rack *(6)*		1 integrated 100BASE-FX Hot Standby multimode port *(4)*, 6 “option” modules on local rack *(6)*	1 integrated 100BASE-FX Hot Standby single mode port *(5)*, 6 “option” modules on local rack *(6)*	
	USB	1 port reserved for programming PC		1 port reserved for programming PC		
Redundancy		Power supplies, remote I/O network, Modbus Plus modules, Ethernet TCP/IP modules, Profibus module		Power supplies, remote I/O network, Modbus Plus modules, Ethernet TCP/IP modules, Profibus module		
Hot Standby		Yes		Yes		
Application structure	Master task	1 cyclic/periodic		1 cyclic/periodic		
	Fast task	–		–		
	Auxiliary tasks	–		–		
	Interrupt tasks – Max. number	–		–		
	Interrupt tasks – I/O interrupt	–		–		
	Interrupt tasks – Timer interrupt	–		–		
Number of Kinstructions executed per ms	100% Boolean	10.28 Kinst/ms		10.28 Kinst/ms		
	65% Boolean and 35% numerical	10.07 Kinst/ms		10.07 Kinst/ms		
Memory capacity without PCMCIA card	IEC program and data	512 KB	1024 KB	3072 KB		11 MB
Memory expansion with PCMCIA card	Program	Up to 7168 KB		Up to 7168 KB		Up to 11264 KB
	Data	512 KB	1024 KB	3072 KB		1536 KB
	File storage	8 MB (PCMCIA expansion in CPU slot no. 0 and/or no. 1)		8 MB (PCMCIA expansion in CPU slot no. 0 and/or no. 1)		
Bus current required		2160 mA		2500 mA		
Functional safety certification		–		–		
Approvals		UL 508, CSA 22.2-142, FM Class 1 Div 2, CE, ATEX Zone 2/22 *(7)*		UL 508, CSA 22.2-142, FM Class 1 Div 2, CE, ATEX Zone 2/22 *(7)*		
Type of Quantum CPU		**140CPU67060**	**140CPU67160**	**140CPU67260**	**140CPU67261**	**140CPU67861**
Page		1/12		1/12		

(1) The maximum values for the number of discrete I/O and analog I/O depend on the topologies used (remote I/O, distributed I/O, etc.). For more information, please consult our website www.schneider-electric.com.
(2) Profibus DP module by our partner Prosoft (Collaborative Automation Partner Program).
(3) Modbus Plus modules: Only the first 2 of the 6 modules feature the full range of functions.
(4) Max. distance between the 2 Hot Standby CPUs: Up to 4 km (see our website www.schneider-electric.com).
(5) Max. distance between the 2 Hot Standby CPUs: Up to 16 km.
(6) With a maximum of a network head adaptor with integral router (140NOC78100).
(7) Only Conformal Coating versions are ATEX Zone 2/22 certified. For more information, see pages 8/2 to 8/9.

Modicon Quantum automation platform

Unity Pro standard CPUs

Presentation

The CPUs for the Modicon Quantum automation platform are based on high-performance processors and are compatible with Unity Pro software. Numerous functions are included as standard in Quantum CPUs:

- Superior scan times and fast I/O acquisition
- Ability to handle interrupts (timed and I/O based)
- Handling of Fast task, as well as a Master task
- Memory expansion using PCMCIA cards
- Multiple communication ports integrated in the CPU
- Ease of diagnostics and maintenance via the LCD display block on the front panel of high-end CPUs

The CPUs offered have different memory capacities, processing speeds and communication options.

Protected backed up memory

As standard, the CPUs store the application program in a battery-backed internal RAM. This battery is located on the front of the CPU and can be replaced while the CPU is running.

A switch enables the application to be made secure against malicious tampering via a remote connection.

To protect the application program from inadvertent changes during operation, the CPUs feature a key switch on the front panel to protect the memory. This key switch can also be used to start and stop the CPU. The **140CPU31110** CPU only has a memory-protect slide switch.

The high-end **140CPU65150, 140CPU65160, 140CPU65260, 140CPU67060, 140CPU67160, 140CPU67260** and **140CPU67261** CPUs have 2 slots for a PCMCIA card:

- An upper slot (no. 0) for a memory expansion card (programs, symbols, constants and/or data storage)
- A lower slot (no. 1) for a data storage memory expansion card

Besides the large-capacity internal RAM, the high-end **140CPU65860** and **140CPU67861** CPUs have 1 slot for a PCMCIA card:

- One slot for a data storage memory expansion card

Built-in communication ports

Quantum CPUs incorporate, depending on the model:

- Two RS 232 Modbus ports (1 RS 232/485 Modbus port for **140CPU6●●●●** CPUs)
- One Modbus Plus port
- One TCP/IP 10BASE-T/100BASE-TX Ethernet TCP/IP port (100BASE-FX for **140CPU67●6●** Hot Standby CPUs)
- One USB port for connecting a programming PC terminal for the CPUs

LCD display

Depending on the model, the CPUs have an LCD display (2 lines of 16 characters) with adjustable brightness and contrast controls. The keypad associated with the display can be used for diagnostics, access to certain configuration parameters and starting and stopping the CPU.

Presentation (continued)

Hot Standby redundancy

140CPU67060, 140CPU67160, 140CPU67260, 140CPU67261 and **140CPU67861** CPUs are dedicated to the availability function of Hot Standby applications. They have a 100 Mbps Ethernet fibre optic link and the Hot Standby function can be diagnosed using the LCD display.
The **140CPU67261** and **140CPU67861** CPUs are specifically designed for Hot Standby applications for which the distance between the two Hot Standby CPUs can be as much as 16 km.
Some CPUs have increased capability in terms of memory, number of drops, and online functions, etc. See the dedicated description pages for more information.

Quantum application design and installation

Use of these Quantum CPUs requires:
- Unity Pro Large or Extra Large programming software. This software is compatible with the Premium, M580 and M340 platforms.
- Optionally, as required:
  - Unity EFB toolkit software for developing EF and EFB function block libraries in C language
  - Unity Dif software for comparing Unity Pro applications
  - Unity Loader software for updating Unity Pro projects

Cybersecurity

Schneider Electric has always taken care of the security of its systems. Security guidelines are available for our customers to ensure their systems are protected from attacks.
Modicon Quantum is a cyber-secure platform thanks to its advanced built-in cybersecurity features and robustness.
The Modicon Quantum automation platform also offers the following features:
- Protection against unauthorized remote connections via an online editable Access Control List
- Protection against remote programming changes via a password
- Option to enable or disable HTTP or FTP services
- Integrity of Unity Pro executable files
- Unnecessary services disabled by default
- Security features enabled by default

Modicon Quantum automation platform

Unity Pro standard CPUs

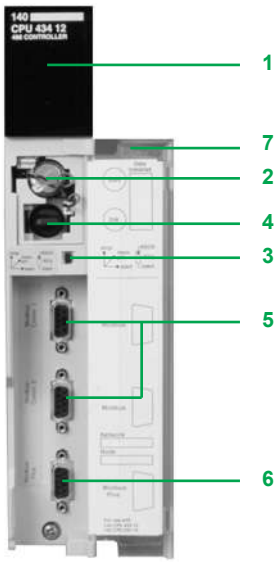

140CPU43412U

Description

Standard CPUs

140CPU31110 and **140CPU43412U** CPU front panels comprise:

1 A display block with 7 LEDs:
- ◻ Ready LED (green): Power-up diagnostic tests successful
- ◻ Run LED (green): Program executing
- ◻ Modbus LED (green): Activity on the Modbus port
- ◻ Modbus Plus LED (green): Activity on the Modbus Plus port
- ◻ Mem Prt LED (orange): Memory write-protected (memory protection switch activated)
- ◻ Bat Low LED (red): Backup battery needs replacing or is missing
- ◻ Error A LED (red): Communication fault on the Modbus Plus port

2 A backup battery slot *(1)*

3 A slide switch for selecting the Modbus port communication parameters
- ◻ A slide switch (**140CPU31110** model) for write-protecting the memory

4 A key switch (**140CPU43412U** models):
- ◻ Stop position: The PLC is stopped and program modifications are not permitted
- ◻ Mem Prt position: The PLC is either stopped or running and program modifications are not permitted
- ◻ Start position: The PLC is either stopped or running, program modifications are permitted

5 Two 9-way female SUB-D connectors for connecting to the Modbus bus

6 A 9-way female SUB-D connector for connecting to the Modbus Plus network

7 A removable hinged door with a customizable identification label

(1) Internal RAM backup battery:
- *Product reference: 990XCP98000*
- *Type: 3 V ⎓ lithium*
- *Capacity: 1200 mAh*
- *Storage life: 10 years*

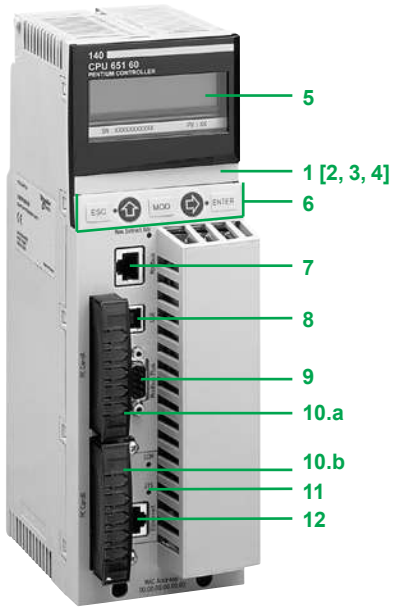

140CPU65160

Description (continued)

High performance CPUs

140CPU65150, 140CPU65160, 140CPU65260, 140CPU65860, 140CPU67060, 140CPU67160, 140CPU67260, 140CPU67261 and **140CPU67861** CPU front panels comprise:

1 An LCD display cover, providing access to:

2 A key switch:
- Unlocked: All system operations can be invoked and all changeable module parameters can be modified via the LCD and keypad. The memory is not write-protected
- Locked: No system operations can be invoked and all changeable module parameters are read-only. Memory is write-protected and the application program safeguarded. This mode avoids malicious tampering via a remote connection

3 A backup battery slot *(1)*

4 A reset button (Restart)

5 An LCD display (2 lines of 16 characters) with brightness and contrast controls

6 A 5-button keypad with 2 LEDs *(ESC, ENTER, MOD, ⇧, ⇨)*

7 An RJ45 connector for connecting to the Modbus bus

8 A type B female USB connector for connecting the programming PC terminal

9 A 9-way female SUB-D connector for connecting to the Modbus Plus network

10 Two slots for PCMCIA memory expansion cards:

10.a The upper slot (no.0) for a memory expansion card (except for models **140CPU65860** and **140CPU67861**)

10.b The lower slot (no.1) for data storage memory expansion card (all models)

11 Two LEDs:
- COM LED (green): Activity on the Ethernet port (**140CPU65150, 140CPU65160, 140CPU65260** and **140CPU65860** models), activity on the Hot Standby primary or secondary drop (**140CPU67060, 140CPU67160, 140CPU67260, 140CPU67261** and **140CPU67861** models)
- ERR LED (red): Ethernet frame collision (**140CPU65150, 140CPU65160, 140CPU65260** and **140CPU65860** models), communication error between the Hot Standby primary and secondary drops (**140CPU67060, 140CPU67160, 140CPU67260, 140CPU67261** and **140CPU67861** models)

12 A connector:
- RJ45 connector for connection to the Ethernet network (**140CPU65150, 140CPU65160, 140CPU65260** and **140CPU65860** models)
- MT-RJ multimode fibre optic connector (**140CPU67060, 140CPU67160** and **140CPU67260** models) or LC single mode fibre optic connector (**140CPU67261** and **140CPU67861** model) for interconnecting the primary and standby PLCs in the Hot Standby architecture

(1) Internal RAM backup battery:
- *Product reference: 990XCP98000*
- *Type: 3 V ⎓ lithium*
- *Capacity: 1200 mAh*
- *Storage life: 10 years*

Modicon Quantum automation platform

Unity Pro standard CPUs

CPU without PCMCIA memory card

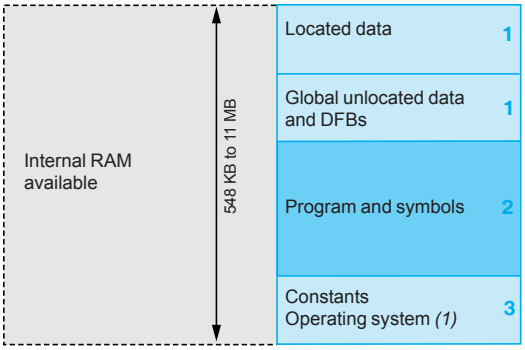

CPU with PCMCIA memory card in slot no. 0

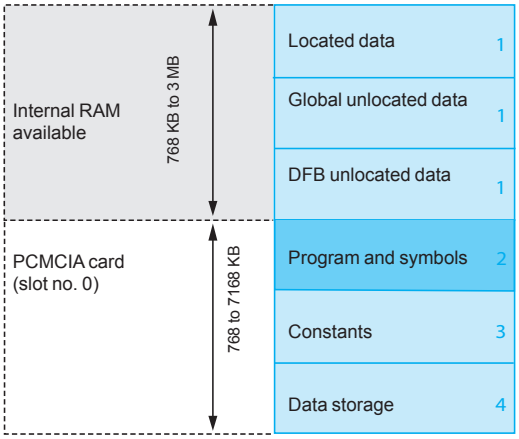

CPU with data storage memory card in slot no. 0

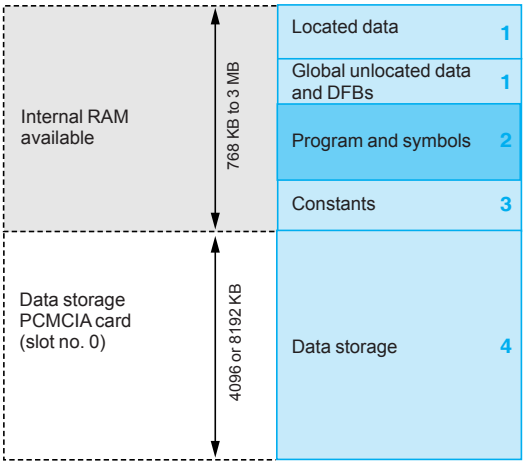

Memory structure

The application memory is divided into memory areas physically distributed in the internal RAM and on 1 or 2 PCMCIA memory expansion cards (2 PCMCIA cards on models **140CPU65150, 140CPU65160, 140CPU65260, 140CPU67060, 140CPU67160, 140CPU67260, 140CPU67261** and **140CPU67861**, and 1 on models **140CPU65860** and **140CPU67861**):

1 Application data area always in internal RAM. This area is broken down into 2 types of data, to be used according to the user's habits and preferences:
- Global located data, corresponding to data defined by an address (for example, %MW237) with which a symbol can be associated (for example, Counting_rejects).
- Unlocated data, corresponding to data defined only by a symbol. This type of addressing removes the memory “mapping” management constraints because the addresses are assigned automatically.
- DFB unlocated data corresponding to DFB user function blocks. The size of this object area is only limited by the size of the internal RAM physical memory available.

2 Application program and symbols area in the internal RAM or in the PCMCIA memory card (descriptor, executable code for the tasks and application symbols database)

3 Constants area in internal RAM or the PCMCIA memory card (constant words, initial values and configuration)

4 Area for storing additional data that can be used for distributed applications to store information such as production data and manufacturing recipes (only on **140CPU65150, 140CPU65160, 140CPU65260, 140CPU65860, 140CPU67060, 140CPU67160, 140CPU67260, 140CPU67261** and **140CPU67861** CPUs)

According to the application memory size requirements, two memory structures are possible depending on whether the Quantum CPU has 0, 1 or 2 PCMCIA memory expansion cards:

■ Application in internal RAM, the application is completely loaded into the CPU’s battery-backed internal RAM *(2)* the capacity of which depends on the CPU model.

■ Application in the PCMCIA card, the internal RAM is reserved for the application data. The PCMCIA memory card contains the program space (program, symbols and constants areas). Certain types of PCMCIA memory card also take the data storage area.

The presence of the symbols area with the program area is optional. The fact of having the application symbols database on the PLC means that, when it is connected to an empty programming PC (with no applications), all the elements needed to debug or upgrade this PLC are available.

(1) Only with **140CPU31110, 140CPU43412U** *CPUs.*
(2) The internal RAM is backed up by a 3 V ⎓ lithium battery (installed by the user). SRAM memory expansion cards are protected by a lithium battery.

CPU with 2 PCMCIA memory cards in slot no. 0 and no. 1

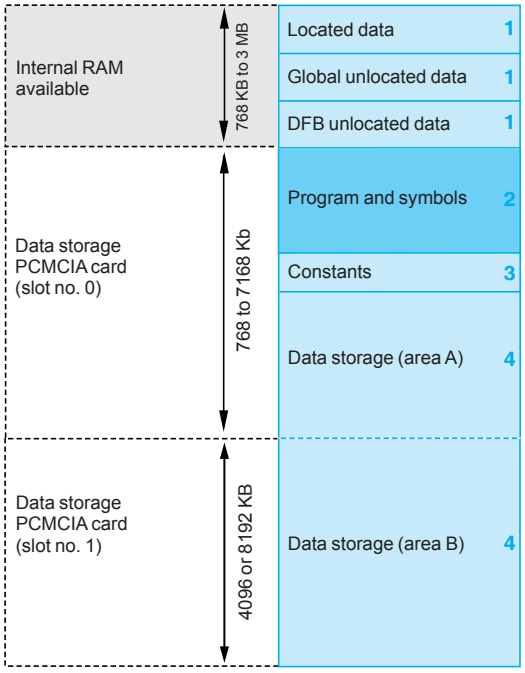

CPU with 1 PCMCIA memory cards in slot no.1

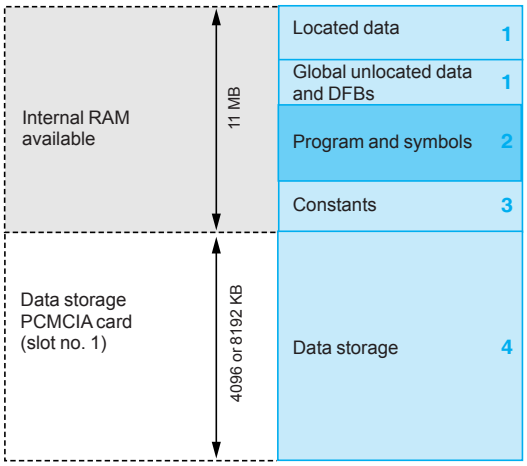

Memory structure (continued)

Expansion of the file storage area

With the **TSXMRPF004M**, **TSXMRPF008M** file storage memory cards (4096 or 8192 KB):

■ A file storage area can be provided when the application is completely loaded in the internal RAM

■ Memory space can be freed up for the program when the application is in the PCMCIA card

The Unity Pro programming software assists the application designer with management of the structure and the occupation of memory space in the Quantum PLC.

Protecting the application

Whether located in the internal RAM or in the PCMCIA card, the application can be protected with a key switch (see page 1/8 and page 1/9), in order to prohibit access to it
(read or modify program) online in Unity Pro.

Modicon Quantum automation platform

Unity Pro standard CPUs

140CPU43412U

140CPU65160

140CPU65860

Unity Pro standard CPUs

CPU		Max. application memory capacity		Communication ports	Optical fibre		Reference	Weight
Clock speed	Coprocessor	Internal RAM available (for reference stated)	With PCMCIA card		Type and max. distance			
MHz		KB	KB			km		kg/*lb*
66	Built-in math	548	–	2 Modbus RS 232 1 Modbus Plus	–	–	**140CPU31110**	0.770/ *1.698*
	Built-in math	1056	–	2 Modbus RS 232 1 Modbus Plus	–	–	**140CPU43412U**	0.623/ *1.373*
166	Yes, built-in Ethernet TCP/IP	768	7168	1 Modbus *(1)* 1 Modbus Plus 1 USB 1 Ethernet TCP/IP	–	–	**140CPU65150**	1.430/ *3.153*
266	Yes, built-in Ethernet TCP/IP	1024	7168	1 Modbus *(1)* 1 Modbus Plus 1 USB 1 Ethernet TCP/IP	–	–	**140CPU65160**	1.967/ *4.336*
		3072	7168	1 Modbus *(1)* 1 Modbus Plus 1 USB 1 Ethernet TCP/IP	–	–	**140CPU65260**	1.468/ *3.236*
		11264	11264	1 Modbus *(1)* 1 Modbus Plus 1 USB 1 Ethernet TCP/IP	–	–	**140CPU65860**	1.468/ *3.236*
		512	7168	1 Modbus *(1)* 1 Modbus Plus 1 USB 1 Hot Standby port (100 Mbps) *(2)*	Multimode	2	**140CPU67060**	1.424/ *3.139*
		1024	7168	1 Modbus *(1)* 1 Modbus Plus 1 USB 1 Hot Standby port (100 Mbps) *(2)*	multimode	2	**140CPU67160**	1.424/ *3.139*
		3072	7168	1 Modbus *(1)* 1 Modbus Plus 1 USB 1 Hot Standby port (100 Mbps) *(2)*	multimode	2	**140CPU67260**	1.424/ *3.139*
		3072	7168	1 Modbus *(1)* 1 Modbus Plus 1 USB 1 Hot Standby port (100 Mbps) *(3)*	single mode	16	**140CPU67261**	1.424/ *3.139*
		11264	11264	1 Modbus *(1)* 1 Modbus Plus 1 USB 1 Hot Standby port (100 Mbps) *(3)*	Single mode	16	**140CPU67861**	1.424/ *3.139*

(1) RS 232/485 Modbus port.
(2) 100 Mbps Ethernet port for multimode optical fibre.
(3) 100 Mbps Ethernet port for single mode optical fibre.

I/O architectures: page 2/6
I/O: page 3/2
Communication: page 5/2
Safety modules: page 6/2

Modicon Quantum automation platform

Unity Pro standard CPUs

PCMCIA memory expansion cards

Quantum **140CPU65860** and **140CPU67861** can take 1 memory expansion card. Quantum **140CPU65150, 140CPU65160, 140CPU65260, 140CPU67060, 140CPU67160, 140CPU67260,** and **140CPU67261** CPUs can take up to 2 memory expansion cards. However, the useful memory capacity is limited to the maximum size defined for the CPU model (see pages 1/12).

Connection cables and accessories

TSXCUSB232

990NAD211●0

990NAD218●0

TSXCUSBMBP

Description	Use		Length m/*ft*	Reference	Weight kg/*lb*
	From CPU	To PC port			
Cables for connection to the PC terminal	Modbus port, 9-way SUB-D for: 140CPU31110, 140CPU43412U	RS 232 9-way SUB-D connector	3.7/ *12.14*	**990NAA26320**	0.300/ *0.661*
			15/ *49.21*	**990NAA26350**	1.820/ *4.012*
		USB port of PC	0.4/ *1.31*	**TSXCUSB232** *(1)*	0.145/ *0.320*
	Modbus port, RJ45 for: 140CPU6●●●●	RJ45 connector	1/ *3.28*	**110XCA28201**	–
			3/ *9.84*	**110XCA28202**	–
			6/ *19.68*	**110XCA28203**	–
		USB port of PC	0.4/ *1.31*	**TSXCUSB232** *(2)*	0.145/ *0.320*
	USB port for: 140CPU6●●●●	USB port of PC	3.3/ *10.83*	**UNYXCAUSB033**	–
Connection cable for Modbus network	Modbus port, RJ45 on high performance CPUs 140CPU65●●● and 140CPU67●●●	RJ 45 port on Modbus splitter box LU9GC3	3/ *9.84*	**TCSMCN3M4M3S2**	–
Connection cables for Modbus Plus network	Modbus Plus port, 9-way SUB-D for: 140CPU31110, 140CPU43412U Elbowed connector (left side)	Modbus Plus tap *(3)*	2.4/ *7.87*	**990NAD21110**	–
			6/ *19.68*	**990NAD21130**	–
	Modbus Plus port, 9-way SUB-D for: 140CPU6●●●● Straight connector	Modbus Plus tap *(3)*	2.4/ *7.87*	**990NAD21810**	–
			6/ *19.68*	**990NAD21830**	–
Modbus Plus/USB converter *(5)*	Modbus Plus tap *(3)*	USB port	0.4/ *1.31*	**TSXCUSBMBP** *(4)*	0.186/ *0.410*
Adaptor	RJ45 connector for 140CPU6●●●●	RS 232 9-way SUB-D connector	–	**110XCA20300**	–

(1) With the **TSXCUSB232** *converter, use the* **990NAA26320/30** *cable.*
(2) With the **TSXCUSB232** *converter, use the* **110XCA20300** *adaptor and the* **110XCA2820●** *cable.*
(3) Modbus Plus tap: **990NAD23020/21** *(IP 20) or* **990NAD23010** *(IP 65).*
(4) With the **TSXCUSBMBP** *converter, use the* **990NAD21110/30** *or* **990NAD21810/30** *cable.*
(5) This converter is recommended for updating the CPU firmware.

Modicon Quantum automation platform

PCMCIA memory expansion cards

Unity Pro

Presentation

PCMCIA memory expansion cards make it possible to expand the RAM memory capacity of high-performance Quantum CPUs.
Depending on the model, these cards are designed to accommodate:
■ The application program, symbols and constants
■ The additional application data
■ Or both

PCMCIA memory expansion cards

These cards provide three different storage types:
■ Storage of the application: Program, symbols, and constants in a common space of 512 KB to 4096 KB: **TSXMFPP●●●K/M** for Flash EPROM memories
■ Storage of the application and additional data, comprising:
□ An application area of 192 KB to 7 MB
□ A data storage area of up to 7 MB for additional data
The limit between these two spaces is configurable. The configurable cards are:
□ **TSXMRPC●●●K/M** for SRAM memories
□ **TSX MCPC●●●K/M** for Flash EPROM and SRAM memories
■ Storage of additional data, provided by SRAM **TSXMRPF004M, TSXMRPF008M** 4 or 8 MB memory cards

CPU-Memory card	TSXMFPP●●●K/M	TSXMRPC●●●K/M TSXMCPC●●●K/M	TSXMRPF00●M
Slot 0 140CPU65150, 140CPU65160, 140CPU65260, 140CPU67060, 140CPU67160, 140CPU67260 and 140CPU67261			
Slot 1 140CPU65150, 140CPU65160, 140CPU65260, 140CPU65860, 140CPU67060, 140CPU67160, 140CPU67260, 140CPU67261 and 140CPU67861			

Compatible
Incompatible

These cards use two technologies:
■ Battery-backed SRAM
Used particularly in the application program design and debugging phases.
These cards provide:
□ All of the application's transfer and modification services in online mode
□ Additional data storage
The memory is protected by a removable battery built into the PCMCIA card.
A second auxiliary battery is present to enable the main battery to be replaced without loss of data.

■ Flash EPROM
Used when debugging of the application program is complete. This is used to:
□ Overcome battery life restrictions
□ Perform one global application transfer
When in use, it is impossible to carry out modifications to the application in online mode.

Program modification in online mode

Only those expansion cards in which the program is stored in SRAM memory **TSXMRPC●●●K/M** allow program modifications to be carried out in online mode.

A user with a CPU equipped with a memory expansion card and who wishes to make modifications or additions to the program in online mode must structure the application program in several reasonably sized sections.

Modicon Quantum automation platform

PCMCIA memory expansion cards

Unity Pro

TSXMRP/MCP/MRP●●●●

TSXMFPP●●●●

References

Quantum **140CPU65150, 140CPU65160, 140CPU65260, 140CPU65860, 140CPU67060, 140CPU67160, 140CPU67260, 140CPU67261** and **140CPU67861** CPUs can take the memory expansion cards listed below.
There are two types of memory limits:
- One associated with the type of CPU
- One associated with the chosen model of PCMCIA memory card

The lower of these two limits defines the memory capacity that is accessible to the user for the application.

PCMCIA memory expansion cards

Description	Memory size		Reference	Weight kg/*lb*
	Application	Data file		
SRAM configurable data file/application memory expansion	192…768 KB	576…0 KB	**TSXMRPC768K**	0.076/ *0.168*
	192…1024 KB	832…0 KB	**TSXMRPC001M**	0.076/ *0.168*
	192…1792 KB	1600…0 KB	**TSXMRPC01M7**	0.076/ *0.168*
	192…2048 KB	1856…0 KB	**TSXMRPC002M**	0.076/ *0.168*
	192…3072 KB	2880…0 KB	**TSXMRPC003M**	0.076/ *0.168*
	192…7168 KB	6976…0 KB	**TSXMRPC007M**	0.076/ *0.168*
Flash EPROM application memory expansion	512 KB	–	**TSXMFPP512K**	0.044/ *0.097*
	1024 KB	–	**TSXMFPP001M**	0.044/ *0.097*
	2048 KB	–	**TSXMFPP002M**	0.044/ *0.097*
	4096 KB	–	**TSXMFPP004M**	0.044/ *0.097*
Flash EPROM and SRAM configurable data file/application memory expansion	512 KB	512 KB	**TSXMCPC512K**	0.076/ *0.168*
	2048 KB	1024 KB	**TSXMCPC002M**	0.076/ *0.168*
SRAM data file memory expansion *(1)*	–	4096 KB	**TSXMRPF004M**	0.076/ *0.168*
	–	8192 KB	**TSXMRPF008M**	0.076/ *0.168*

Replacement parts

Description	Use	Type	Reference	Weight kg/*lb*
Backup battery	SRAM PCMCIA memory card	Main	**TSXBATM02**	0.010/ *0.022*
		Auxiliary	**TSXBATM03**	0.005/ *0.011*

(1) Intended for the storage of manufacturing recipes and production data.
Capacity depends on the PCMCIA card model.

Modicon Quantum automation platform
Racks

Presentation

Modicon Quantum automation platform modules mount easily in racks in standard industrial electrical cabinets or in 19 inch racks. Mounting brackets are available as options for mounting these racks. Each rack provides the control signals and distributes the power necessary to operate the installed modules.

Description

Five different rack models are available, with 3, 4, 6, 10 or 16 slots. The rack slots are universal (any module can fit into any slot). Almost all Quantum modules are designed to fit into a single slot in a Quantum rack *(1)*.

There are no reserved slots in a Quantum system, although it is recommended that power supply modules are fitted in the extreme left slot, for optimum heat dissipation. The only limits on the rack are the power available for the modules and the addressing space. Any rack can be used in any of the three architectures supported by the Quantum platform: Local I/O, remote I/O or distributed I/O.

In a Quantum system, module addressing and configuration is handled by the software. No switches or other hardware components are used.

140XBP0●●00 racks comprise:

1 A metal frame
2 Connectors for module/rack connection
3 Tapped holes for fixing each module
4 Holes for fixing the rack
5 Earth terminals for earthing the rack

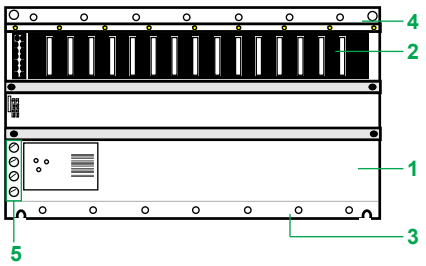

Rack expansion module

The **140XBE10000** rack expansion module enables I/O in an adjacent “secondary” rack to communicate with the CPU or RIO drop in the “primary” rack via a specific communication cable. An expansion module must be installed in each rack. The extension cable provides all the signals necessary for data transmission between the two racks. A single rack expansion module can be added to each rack.

The rack expansion module has the following flexible characteristics:

■ The same **140XBE10000** rack expansion module is used for both “primary” and “secondary” racks. A rack expansion system consists of two **140XBE10000** rack expansion modules and one cable, available in 1, 2 or 3 m lengths.
■ The system can use any Quantum power supply module. Each rack can have a different type of power supply module.
■ Loss of power in the “secondary” rack will not shut down the entire drop. Only those modules located in the “secondary” rack will lose power.
■ Rack expansion modules can be placed in any slot in the rack and do not necessarily have to be placed in corresponding slots in the “primary” and “secondary” racks.
■ The rack expansion module is not recognized by the configuration software. It will appear as an unfilled slot in the I/O map.
■ All rack sizes are possible.
■ The rack expansion module supports local I/O and remote I/O (31 drops).
■ Expansion racks can take all discrete and analog I/O modules and also high-speed counter modules.

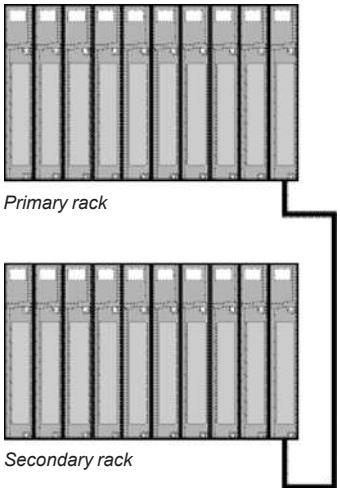

(1) Except **140CPU6●●●●** *high-performance CPUs, which require 2 slots.*

Modicon Quantum automation platform
Racks

Racks

Description	Number of slots	Safety	Reference	Weight kg/*lb*
Racks for: **- Local I/O modules** **- Remote I/O modules**	3	–	**140XBP00300**	0.340/ *0.750*
	4	–	**140XBP00400**	0.450/ *0.992*
	6	Non-interfering	**140XBP00600**	0.640/ *1.411*
	10	Non-interfering	**140XBP01000**	1.000/ *2.204*
	16	Non-interfering	**140XBP01600**	1.600/ *3.527*

Rack accessories

Description	Length/ dimensions	Reference	Weight kg/*lb*
Rack expansion module	–	**140XBE10000**	–
Cables for expansion racks	1 m/ *3.28 ft*	**140XCA71703**	–
	2 m/ *6.56 ft*	**140XCA71706**	–
	3 m/ *9.84 ft*	**140XCA71709**	–
19" front rail mounting bracket for 140XBP01000 rack	125 mm/ *4.92 in.* deep	**140XCP40100**	–
19" support for surface mounting a 140XBP01000 rack	20 mm/ *0.79 in.* deep	**140XCP40200**	–

I/O architectures:
page 2/6

I/O:
page 3/2

Communication:
page 5/2

Safety modules:
page 6/2

Modicon Quantum automation platform

Power supply modules

Applications	Standalone			Summable
Input voltage	100…276 V ∼	20…30 V ⎓	100…150 V ⎓	93…138 V ∼ or 170…276 V ∼
Input frequency	47…63 Hz	–		47…63 Hz
Input current	0.4 A at 115 V ∼ 0.2 A at 230 V ∼	1.6 A	0.4 A	1.3 A at 115 V ∼ 0.75 A at 230 V ∼
External fuse	1.5 A slow-blow	2.5 A slow-blow	0.7 A slow-blow	2.0 A slow-blow
Maximum power interruption	1/2 cycle at full load	1 ms at 20 V ⎓	1 ms max.	1/2 cycle at full load
Output voltage to bus	5.1 V ⎓			
Output current	3.0 A max.			Standalone: 11 A at 60°C Summable: 20 A at 60°C
Output protection	Overcurrent, overvoltage			
Power dissipation in the module	2.0 + (3 x I_{out}) in W, where I_{out} is in A			6.0 + (1.5 x I_{out}) in W, where I_{out} is in A
Alarm relay	No			Yes
Functional safety certification	–			
Approvals	UL 508, CSA 22.2-142, cUL, FM Class 1 Div. 2, CE			
Type of module	**140CPS11100**	**140CPS21100**	**140CPS51100**	**140CPS11420**
Pages	1/21			

(1) Only Conformal Coating versions, depending on model, are ATEX Zone 2/22 certified.
For more information, see pages 8/2 to 8/9.

Summable		Redundant			
20…30 V ⎓	40…60 V ⎓	93…138 V ∼ or 170…276 V ∼	20… 30 V ⎓	40…60 V ⎓	100…150 V ⎓
–		47…63 Hz	–	47…63 Hz	
3.8 A max.	1.2 A at 48 V ⎓	1.1 A at 115 V ∼ 0.6 A at 230 V ∼	3.8 A max.	1.3 A at 48 V ⎓	0.5 A at 125 V ⎓
5.0 A slow-blow	2.5 A slow-blow	2.0 A slow-blow	5.0 A slow-blow	2.5 A slow-blow	2.0 A slow-blow
1 ms at 24 V ⎓	13 ms at 40 V ⎓	1/2 cycle at full load	1 ms at 24V ⎓	13 ms at 40 V ⎓	1 ms max.
5.1 V ⎓					
8.0 A at 50°C 7.0 A at 60°C		11 A at 60°C	8.0 A at 40°C 6.0 A at 60°C	11 A at 60°C	8 A
Overcurrent, overvoltage					
6.0 + (1.8 x I_{out}) in W, where I_{out} is in A	15.6 W at 8 A	6.0 + (1.5 x I_{out}) in W, where I_{out} is in A	6.0 + (1.8 x I_{out}) in W, where I_{out} is in A	17.2 W at 8 A	6.0 + (1.5 x I_{out}) in W, where I_{out} is in A
Yes		Yes			No
–		SIL3 certified	Non-interfering	–	
UL 508, CSA 22.2-142, cUL, FM Class 1 Div. 2, CE, ATEX Zone 2/22 *(1)*					
140CPS21400 *(1)*	**140CPS41400**	**140CPS12420**	**140CPS22400** *(1)*	**140CPS42400**	**140CPS52400**
1/21					

Modicon Quantum automation platform

Power supply modules

Presentation

Quantum power supply modules serve two purposes - they provide power to the system rack and protect the system from noise and voltage swings. All power supply modules feature overcurrent and overvoltage protection. They operate in most electrically noisy environments without the need for external isolation transformers. In the event of an unforeseen loss of power, the power supply modules ensure that the system has adequate time for a safe and orderly shutdown. A power supply module converts the input voltage to regulated + 5 VDC for the requirements of the CPU, the I/O modules and those of all the communication modules installed in the rack. The power between the sensors/preactuators and the I/O points on the Quantum system is not provided by these power supply modules.

Three types of power supply module are available for use in local or remote (RIO) architectures:
- Low power standalone power supply modules
- High power summable power supply modules
- High power redundant power supply modules

For distributed I/O architectures on Modbus Plus, low power standalone power supplies are available. These are dedicated to distributed architectures and integrated in distributed I/O drop adaptors. Distributed power supplies are described in the pages on the distributed I/O architecture.

Functions

Standalone power supply modules

A standalone power supply module provides a 3 A current to the Quantum rack. When the system only requires low power, a standalone power supply module is an economical choice. These standalone power supply modules are available for 115/230 V ∿, 24 V ⎓ and 125 V ⎓ supply voltages.

Summable power supply modules

A summable power supply module provides an 8 A or 11 A current to the Quantum rack. These summable power supply modules can operate in either standalone or summable mode. When two summable power supply modules are installed in the same rack, they automatically operate in summable mode, providing a current of 16 A or 20 A (depending on the model). In summable mode, both power supply modules must be the same type and must be installed in the left and right end slots of the rack for maximum life. If one of the two power supply modules has a problem, power is lost to the rack.
If only one summable power supply module is installed in a rack, it operates in standalone mode, supplying a current of 8 A or 11 A to this rack.
Summable power supply modules are available for 115/230 V ∿, 24 V ⎓ and 48/60 V ⎓ supply voltages.

Redundant power supply modules

A redundant power supply module provides a current of 8 A or 11 A (depending on the model) to the Quantum rack. For high-availability applications, two redundant power supply modules will provide a redundant current of 8 A or 11 A.
If one of the two power supply modules is out of service, the one that remains operational maintains the supply of the required power. Each redundant power supply module has a status bit that can be monitored by the application program or by a supervision system, in order to react quickly if the power supply has a problem.
If an additional power supply module is necessary in a configuration with redundant power supply modules, a third redundant power supply module can be added to the rack, increasing the available capacity to 16 A or 20 A. If one of the three power supply modules has technical issues, those which remain operational supply a redundant current of 16 A or 20 A to the rack. If a second power supply module has a problem, power is lost to the rack.
A redundant power supply module can be used as a standalone power supply module.
Summable power supply modules are available for 115/230 V ∿, 24 V ⎓, 48/60 V ⎓ and 125 V ⎓ supply voltages.

Modicon Quantum automation platform

Power supply modules

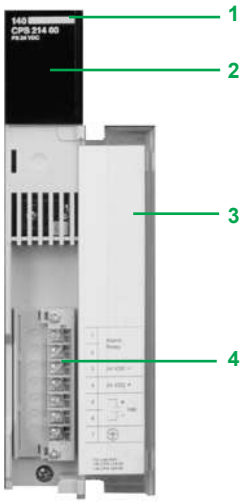

Description

140CPS●●●●0 power supply modules have the following on the front panel:
1 Model number and colour code
2 A display block
3 A removable hinged door with a customizable identification label
4 A 7-way screw terminal block (degree of protection < IP 20)

To be ordered separately if required:
□ 7-way screw terminal block (degree of protection IP 20) **140XTS00500**.

Compatibility of power supplies

Adhere to the following compatibility rules for applications that require the combination of two power supplies, possibly of different ∿ or ⎓ types, on the same rack.

Compatibility of summable power supplies

	Type	140 CPS11420	140 CPS21400	140 CPS41400
140CPS11420	∿			
140CPS21400	⎓			
140CPS41400	⎓			

Compatibility of redundant power supplies

	Type	140 CPS12420	140 CPS12400	140 CPS22400	140 CPS42400	140 CPS52400
140CPS12420	∿					
140CPS12400	∿					
140CPS22400	⎓					
140CPS42400	⎓					
140CPS52400	⎓					

: Compatible power supplies
: Incompatible power supplies

References

Power supply modules

Input voltage	Output current	Type	Safety	Reference	Weight kg/*lb*
120/230 V ∿	3 A	Standalone	–	**140CPS11100**	0.650/ *1.433*
115/230 V ∿	11 A	Summable	–	**140CPS11420**	0.650/ *1.433*
115/230 V ∿	11 A	Redundant	SIL3 certified	**140CPS12420**	0.650/ *1.433*
24 V ⎓	3 A	Standalone	–	**140CPS21100**	0.650/ *1.433*
	8 A	Summable	–	**140CPS21400**	0.650/ *1.433*
		Redundant	Non-interfering	**140CPS22400**	0.650/ *1.433*
48…60 V ⎓	8 A	Summable	–	**140CPS41400**	0.650/ *1.433*
		Redundant	–	**140CPS42400**	0.650/ *1.433*
125 V ⎓	3 A	Standalone	–	**140CPS51100**	0.650/ *1.433*
	8 A	Redundant	–	**140CPS52400**	0.650/ *1.433*

Separate part

Description	Degree of protection	Reference	Weight kg/*lb*
7-way screw terminal block	IP20	**140XTS00500**	0.150/ *0.331*

I/O architectures: page 2/6
I/O: page 3/2
Communication: page 5/2
Safety modules: page 6/2

Contents

2 - I/O architectures and Hot Standby architectures

I/O architectures

Overview of I/O architectures . . . . . *page 2/6*

■ **Local I/O architectures**

□ Presentation ..... *page 2/8*

■ **Distributed I/O architectures Quantum Ethernet I/O**

□ Presentation ..... *page 2/10*

□ Description ..... *page 2/15*

□ Architectures ..... *page 2/19*

□ References ..... *page 2/22*

■ **RIO architectures on S908 bus**

□ Presentation ..... *page 2/26*

□ Topologies ..... *page 2/27*

□ References ..... *page 2/31*

Hot Standby architectures

■ **Unity Hot Standby system**

□ Presentation ..... *page 2/34*

□ Functions ..... *page 2/35*

□ Description ..... *page 2/38*

□ Architecture ..... *page 2/39*

□ References ..... *page 2/40*

■ **Unity Hot Standby system with PTQ-PDPMV1 module**

□ Presentation ..... *page 2/42*

□ Description, operation, characteristics ..... *page 2/43*

2

Modicon X80 I/O platform

Product compatibility according to the network architecture

Product type		Reference	Local rack Modicon M340	EIO Quantum drop with Modicon X80 EIO drop with CRA drop adaptor type		Local rack Modicon M580		M580 EIO drop with X-bus BMXXBP backplane and CRA drop adaptor type		M580 EIO drop with Ethernet + X-bus BMEXBP backplane and CRA drop adaptor	Ethernet Modbus TCP DIO drop with PRA connected to a Quantum/Premium/M580/ M340 platform
			Single-rack or multi-rack	"standard" BMXCRA31200	"performance" BMXCRA31210	X-bus BMXXBP rack	Ethernet + X-bus BMEXBP rack	"standard" BMXCRA31200	"performance" BMXCRA31210	BMECRA31210	BMXPRA0100
				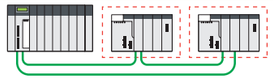				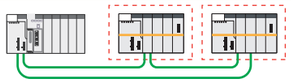		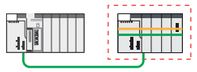	
Racks	X-bus	BMXXBE1000/BMXXBE1000H								(1)	
		BMXXBE2005								(1)	
		BMXXBP0400/BMXXBP0400H									
		BMXXBP0600/BMXXBP0600H									
		BMXXBP0800/BMXXBP0800H									
		BMXXBP1200									
		BMXXEM010									
	Ethernet + X-bus	BMEXBP0400/BMEXBP0400H									
		BMEXBP0800/BMEXBP0800H									
		BMEXBP1200/BMEXBP1200H									
Power supply modules		BMXCPS2000									
		BMXCPS2010									
		BMXCPS3020/BMXCPS3020H									
		BMXCPS3500/BMXCPS3500H									
		BMXCPS3540T									
I/Os	Analog	BMXAMI0410/BMXAMI0410H									
		BMXAMI0800									
		BMXAMI0810/BMXAMI0810H									
		BMXAMM0600/BMXAMM0600H									
		BMXAMO0210/BMXAMO0210H									
		BMXAMO0410/BMXAMO0410H									
		BMXAMO0802									
		BMXART0414/BMXART0414H									
		BMXART0814/BMXART0814H									
	Discrete	BMXDAI0805									
		BMXDAI1602/BMXDAI1602H									
		BMXDAI1603/BMXDAI1603H									
		BMXDAI1604/BMXDAI1604H									
		BMXDAI0814									
		BMXDAO1605/BMXDAO1605H									
		BMXDDI1602/BMXDDI1602H									
		BMXDDI1603/BMXDDI1603H									
		BMXDDI1604T									
		BMXDDI3202K									
		BMXDDI6402K									
		BMXDDM16022/BMXDDM16022H									
		BMXDDM16025/BMXDDM16025H									
		BMXDDM3202K									
		BMXDDO1602/BMXDDO1602H									
		BMXDDO1612/BMXDDO1612H									
		BMXDDO3202K									
		BMXDDO6402K									
		BMXDRA0804T									
		BMXDRA0805/BMXDRA0805H									
		BMXDRA1605/BMXDRA1605H									
	HART	BMEAHI0812									
		BMEAHO0412									

Compatible	Not compatible

(1) Supports only one X-bus rack extension.

More technical information on www.schneider-electric.com

Modicon X80 I/O platform

Product compatibility according to the network architecture

Product type		Reference	Local rack Modicon M340	EIO Quantum drop with Modicon X80 EIO drop with CRA drop adaptor type	
			Single-rack or multi-rack	"standard" BMXCRA31200	"performance" BMXCRA31210
			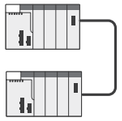	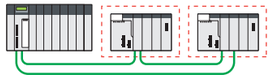	
Application-specific modules	SSI encoder	BMXEAE0300/BMXEAE0300H	■		
	Counter	BMXEHC0200/BMXEHC0200H	■		■
		BMXEHC0800/BMXEHC0800H	■		■
	Time stamping	BMXERT1604T	■		■
	PTO (Pulse Train Output)	BMXMSP0200	■		
	Weighing	PMESWT0100			
Communication modules	Ethernet	BMXNOC0401	■		
		BMENOC03•1			
		BMXNOE0100/BMXNOE0100H	■		
		BMXNOE0110/BMXNOE0110H	■		
	Serial link	BMXNOM0200/BMXNOM0200H	■		■
	RTU	BMXNOR0200H	■		
	AS-Interface	BMXEIA0100	■		
	Optical fibre	BMXNRP0200	■	■	■
		BMXNRP0201	■	■	■
	Wi-Fi	PMXNOW0300	■	■	■
Communication heads		BMXCRA31200		■	
		BMXCRA31210/BMXCRA31210C			■
		BMECRA31210/BMECRA31210C			
		BMXPRA0100			
CPUs	M340	BMXP341000/BMXP341000H	■		
		BMXP342000	■		
		BMXP342010	■		
		BMXP3420102	■		
		BMXP342020H	■		
		BMXP3420302/BMXP3420302H	■		
	M580	BMEP581020/BMEP581020H			
		BMEP582020/BMEP582020H			
		BMEP582040/BMEP582040H			
		BMEP583020			
		BMEP583040			
		BMEP584020			
		BMEP584040			

Local rack Modicon M580		M580 EIO drop with X-bus BMXXBP backplane and CRA drop adaptor type		M580 EIO drop with Ethernet + X-bus BMEXBP backplane and CRA drop adaptor	Ethernet Modbus TCP DIO drop with PRA connected to a Quantum/Premium/M580/M340 platform
X-bus BMXXBP rack	Ethernet + X-bus BMEXBP rack	"standard" BMXCRA31200	"performance" BMXCRA31210	BMECRA31210	BMXPRA0100
				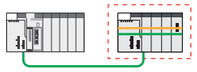	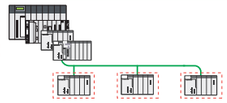
■	■	■	■	■	
■	■		■	■	
■	■		■	■	
■	■		■	■	
■	■				
	■			■	
	■				
					■
■	■		■	■	■
■	■				
■	■		■	■	
■	■	■	■	■	■
■	■	■	■	■	■
■	■	■	■	■	■
		■			
			■		
				■	
					■
■	■				
■	■				
■	■				
■	■				
■	■				
■	■				
■	■				

■ Compatible Not compatible

Modicon Quantum automation platform

I/O architectures

Modicon Quantum type of architecture		Local I/O	Ethernet I/O
			Quantum Ethernet RIO drop
		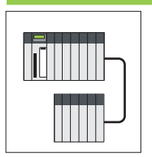	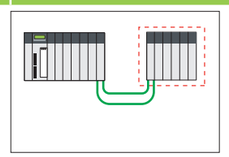
Drop type		Primary rack with Quantum secondary rack	Primary rack and Ethernet RIO rack Option of adding a secondary rack to the primary rack
Capacity per drop *(1)*	I/O	No limit (max. 27 slots)	No limit (max. 26 slots)
	Function	–	
	Communication	–	
Time stamping *(2)*	1 ms max. with BMXERT1604T module with I/O integrated in the ERT module	–	
	10 ms max with BMXCRA31210 module combined with discrete I/O modules	–	
	1 ms max with 140ERT85420 module with I/O integrated in to the ERT module	Applications	
Redundant/summable power supply		Yes	Yes
Dual port		–	Yes
Electrical/fibre optic converter in the rack		–	–
I/O services (DDT, forcing)		–	–
Dimensions	Width x height in mm for a 6-slot rack (overall)	265 x 290	
Certifications *(3)*		CEI/EN 61131-2, CSA 22.2 N° 142, UL 508, CE (see page 8/10) ATEX Zone 2/22 *(4)* (see pages 8/2 and 8/20)	
Compatible CPU types		All CPUs	Double-slot CPUs 140CPU6●●●●
Pages		2/8	2/10

(1) The maximum values for the number of discrete I/O and analog I/O are not cumulative.
(2) "Solution mode" allows time and date-stamped events to be formatted in the OPC Factory server without having to programme the PLVC. "Solution mode" mode requires OFS ≥ V3.4 software and Vijeo Citect ≥ V7.3.
(3) Updated certifications shown on our website www.schneider-electric.com.
(4) Please refer to the specific user guide supplied with each product.
(5) The maximum number of NOM serial link modules is limited to 4 per Unity project. For a greater number of modules, please consult our Customer Care Centre.

Ethernet I/O		S908 bus RIO
Modicon X80 RIO drop with CRA drop adaptor type		Quantum S908 RIO drop
BMXCRA31200 standard	BMXCRA31210 high performance	
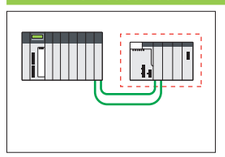	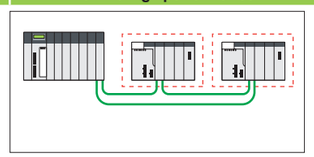	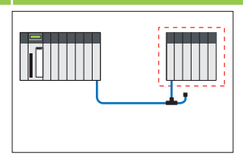
Primary rack and secondary rack + a Modicon X80 I/O rack and secondary rack	Primary rack and secondary rack + two Modicon X80 I/O racks and secondary rack	Primary rack and S908 bus RIO rack
Discrete I/O: 128 I/128 O Analog I/O: 16 I/16 O	Discrete I/O: 1024 I/1024 O Analog I/O: 256 I/256 O	Discrete I/O: 1024 I/1024 O Analog I/O: 64 I/64 O
–	36 modules: ERT multifunction, EHC counter modules	–
–	2 NOM serial link communication modules *(5)*	–
–	Application or "Solution mode" *(2)*	–
–	Application or "Solution mode" *(2)*	–
–		Applications
–		Yes
Yes		With 140CRA93200 module
Yes		–
Yes		–
307.6 x 100		265 x 290
CEI/EN 61131-2, CSA 22.2 N° 142, UL 508, CE (see page 8/10) ATEX Zone 2/22 *(4)* (see pages 8/2 and 8/20)		CEI/EN 61131-2, CSA 22.2 N° 142, UL 508, CE (see page 8/10) ATEX Zone 2/22 *(4)* (see pages 8/2 and 8/20)
Double slot CPUs 140CPU6●●●●		All CPUs
2/10		2/26

Modicon Quantum automation platform

I/O architectures

Local I/O

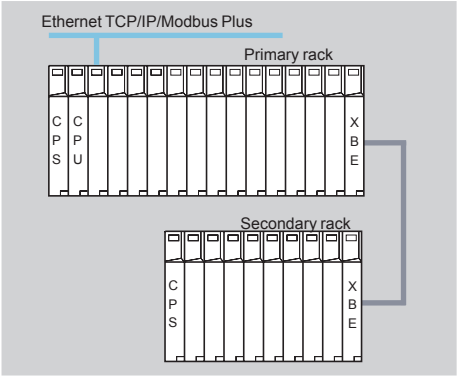

Local I/O architecture

Presentation

The local I/O architecture is used for control systems that are wired on the main control cabinet.

This architecture is recommended for applications in which the I/O need to be refreshed more quickly than the normal scan cycle.

The Quantum platform provides interrupt services for this type of application.

Up to 27 slots are possible for I/O modules in a configuration comprising a primary rack and a secondary rack, connected by two **140XBE10000** rack expansion modules.

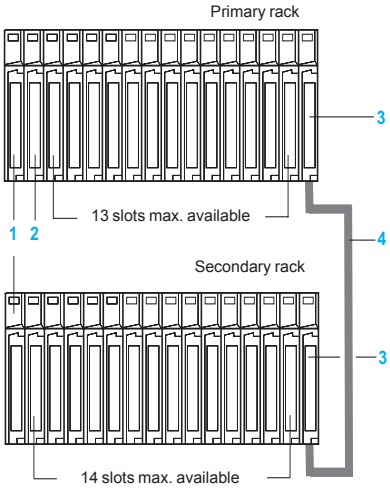

1 Power supply **140CPS●●●00** (1 slot)
2 CPU **140CPU●●●●●** (1 or 2 slot(s))
3 Rack extension module **140XBE10000** (1 slot)
4 Rack extension cable **140XCA7170●** (length 1, 2 or 3 m)

For references of accessories for racks see page 2/23.

Description

The Quantum automation platform provides local I/O management for control systems that are wired on the main control cabinet.

The local I/O can comprise a maximum of 14 I/O modules in the primary rack, including the CPU module 2 and the power supply module 1.
These local I/O can be extended on a second rack (secondary rack) by using a **140XBE10000** rack expansion module 3.

The choice of the appropriate rack depends on the required number of modules for the system. Racks are available in the following formats: 3, 4, 6, 10 and 16 slots.

If necessary, communication and network modules can be installed in the local rack. Most communication and network modules need to be in the local rack.

As well as discrete and analog I/O modules, the following modules are available:
- Modbus Plus and Modbus modules
- Ethernet modules for TCP/IP, Sy/Max
- Remote I/O modules
- Profibus DP modules
- RIO drop adaptors (S908 bus or Quantum Ethernet I/O)

High performance interrupt functions

In some applications, the I/O need to be refreshed more quickly than the normal scan cycle. The Quantum platform provides interrupt services for this type of application.

These services include the incorporation of interrupts on time bases and on inputs, as well as updating of I/O “on the fly”, thus providing very fast transfer times, only on the I/O modules in the local rack.

These services are determined by instructions in the instruction set in the Quantum languages. These instructions can be programmed via the Unity Pro programming software. They can immediately update the I/O in the CPU.

Using a segment dedicated to interrupt processing subroutines, it is therefore possible to use this “on the fly” access either on internal variables, or on outputs of modules in the local rack.

Overview:
page 2/6

Presentation (continued)

Local I/O configuration rules

When configuring a local I/O system, the following four parameters should be considered:

- Discrete and analog I/O modules are not compatible with Hot Standby architectures
- Number of slots available in the 2 local racks (primary and secondary)
- Slots available for optional modules
- Power consumed by the installed modules
- Addressing words available for configuring the modules

Available slots and power consumption

A local I/O system can have a maximum of 27 available slots (with two 16-slot racks) for I/O modules, application-specific modules, communication modules and motion control modules.

All these modules are powered from the power supply included in the rack.

To ensure a valid configuration, simply add together the consumptions (in mA) of the modules in the rack and check that the total current is less than that provided by the selected power supply.

This power consumption calculation can be easily performed using Unity Pro software.

Empty **140XCP50000** modules are also available to occupy unused slots.

Module addressing

With Unity Pro, the I/O addressing is unlimited (physical limitation to 27 slots).

A 16-bit input or output module is equivalent to one word.
Simply add together the addressing requirements of each module and check that the limit is not exceeded.

Overview:
page 2/6

Modicon Quantum automation platform

Quantum Ethernet I/O

I/O architectures

Presentation

The Modicon Quantum automation platform offers an I/O architecture solution over Ethernet, connecting the Quantum local rack to remote I/O (RIO) drops, installed on a Quantum rack or on a Modicon X80 rack *(1)*, and distributed I/O (DIO) devices.

This Quantum Ethernet I/O solution comprises:
- RIO drops on a Quantum rack or on a Modicon X80 rack
- Ethernet DIO devices
- A CRP head adaptor on a local Quantum local rack
- A CRA drop adaptor on each Quantum RIO drop
- A choice of two CRA drop adaptors (standard or high performance) in each Modicon X80 RIO drop
- Two optical repeaters, for single mode or multimode optical fibre, on Modicon X80 RIO drop
- A choice of three types of managed dual ring switches (DRS) from the ConneXium offer *(2)*, configurable by means of predefined configuration files for immediate setup

Different architectures are therefore possible, such as:
- Ethernet RIO architectures with or without ConneXium managed switches *(2)*
- Architectures with separate or combined Ethernet RIO and Ethernet DIO devices on the same physical medium
- Hot Standby (HSBY) architectures

This solution also includes numerous options and functions as standard, providing:
- High process availability, with the option of connecting Ethernet RIO and Ethernet DIO in a daisy chain loop
- Deterministic data exchanges between the PLC and the Ethernet RIO
- Remote service, with a SERVICE port available on the Quantum or Modicon X80 CRP Ethernet head adaptor and CRA Ethernet drop adaptors

Note

- All the validated and tested architectures are shown in the technical documentation available on our website www.schneider-electric.com.
- The use of switches other than those detailed in these Quantum Ethernet I/O pages (pages 2/10 to 2/25) is not supported *(2)*.

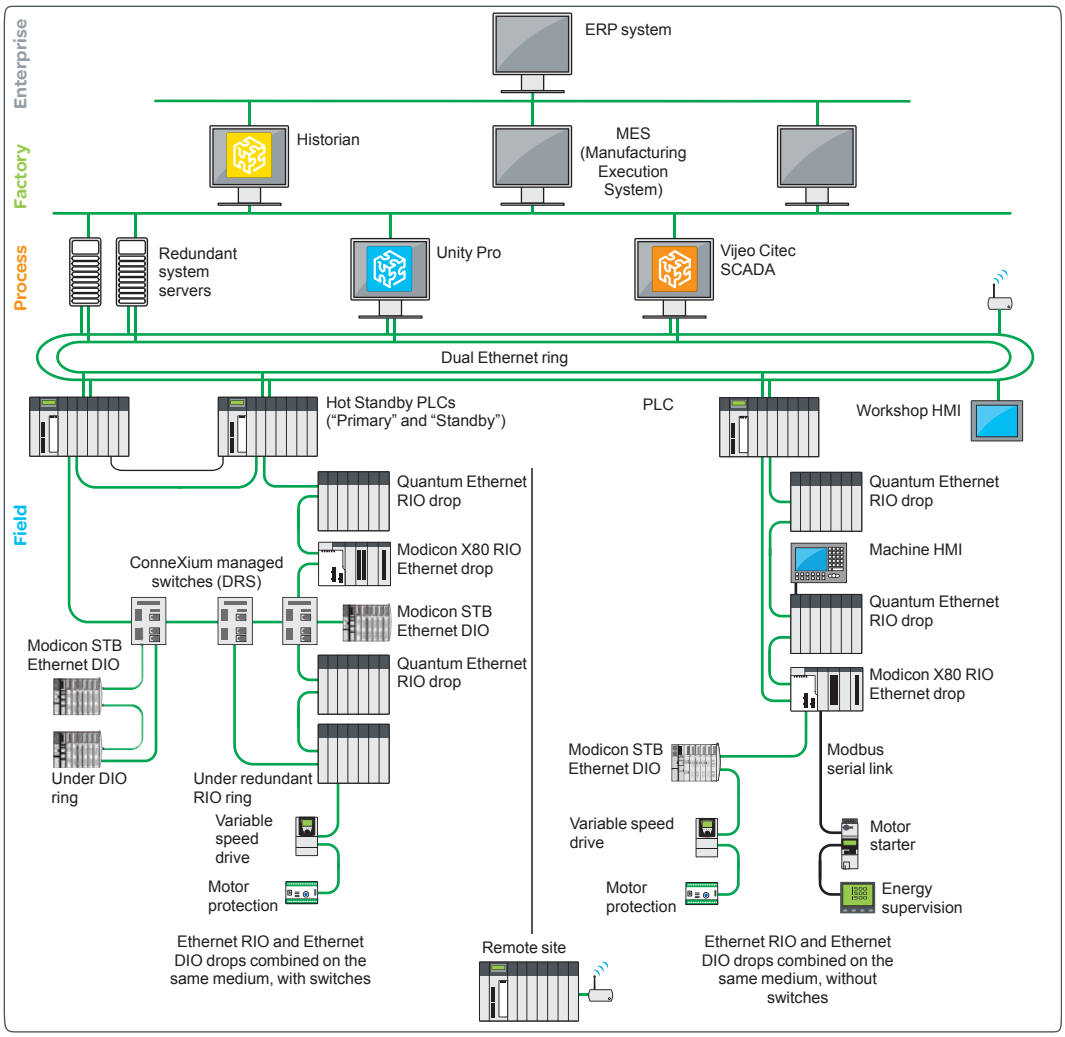

Typical architecture

(1) The Modicon X80 range offers common I/O modules which can be used both in Ethernet RIO drops connected to a Quantum local controller and in Modicon M340 automation platforms.
(2) Supported ConneXium switches: TCSESM083F23F1/063F2CU1/063F2CS1 (see page 2/18).

Presentation (continued)

Advantages of the offer

Flexibility, ability to combine and determinism

■ The flexibility of Ethernet topologies provides many different options to meet the needs of numerous applications.
■ The ability to combine Quantum or Modicon X80 Ethernet RIO and DIO devices on the same medium enables:
□ Reduced wiring costs
□ Up to 31 Ethernet RIO drops and up to 128 Ethernet DIO devices per Ethernet DIO head adaptor *(1)*
■ The deterministic nature of data exchanges between the PLC and the Ethernet RIO allows the system response time to be calculated for the Ethernet RIO, irrespective of the number of Ethernet DIO devices.

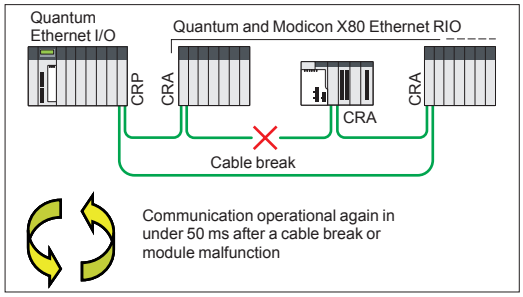

Ethernet RIO architecture, self-healing of a ring

Increased process performance and availability

■ High performance levels exceeding the current limits for Quantum architectures on S908 bus:
□ 64 input words and 64 output words for Quantum Ethernet drops on S908 bus
□ 400 input words and 400 output words for Quantum or Modicon X80 Ethernet drops on Ethernet network
■ High overall process availability in Quantum Ethernet I/O architectures with:
□ Ring topologies using the 2 Ethernet ports on the CRP Ethernet head adaptor and CRA Ethernet drop adaptor
□ Self-healing of a primary or secondary ring in less than 50 ms (*recovering time*), in the event of a cable break or module malfunction. This performance is due to the execution speed of the Ethernet components in the modules and switches (DRS) validated for this type of architecture (see page 2/18).

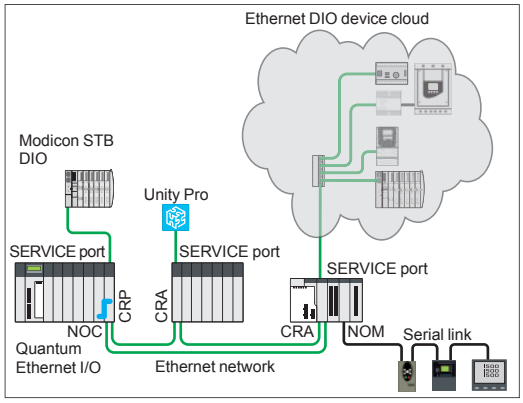

Connection to SERVICE ports

Remote debugging on the SERVICE ports *(2)*

CRP Ethernet head adaptors and Quantum or Modicon X80 CRA Ethernet drop adaptors *(3)* have a SERVICE port which supports a data rate of 5 Mbps (up to a maximum of 20 Mbps for all the Ethernet DIO ports in the network) and allows the connection of:
■ A local HMI (Magelis terminal, etc.) *(4)*
■ One or more Ethernet DIO devices *(5)*
■ A PC with Unity Pro software *(6)*, for remote debugging of an application
■ A network diagnostic device with software such as ConneXium Network Manager or network analysis tools (Port Mirroring function available on the SERVICE port).

Online configuration modification with the CCOTF function

The CCOTF (*Change Configuration On The Fly*) function enables the addition or removal of I/O modules, or even the addition of a complete Quantum or Modicon X80 Ethernet RIO drop *(6)* in a Quantum Ethernet I/O configuration, in RUN mode. These changes are possible on the Quantum local rack and on Quantum or Modicon X80 Ethernet RIO drops equipped with a high performance type CRA module (see page 2/15).
For further information on the CCOTF function, see page 2/37.

(1) Ethernet head adaptor, see page 2/16.
(2) Requires Ethernet module 140NOC78000 or 140NOE771●1, linked to the CRP Ethernet head adaptor in the Quantum local rack (see page 2/16).
(3) Requires Modicon X80 BMXCRA31210 Ethernet drop adaptor (see page 2/17).
(4) Please refer to the "Human-Machine Interfaces" catalogue.
(5) Please refer to the relevant product catalogues on our website www.schneider-electric.com.
(6) Requires Unity Pro Extra Large software ≥ V7.0.

2

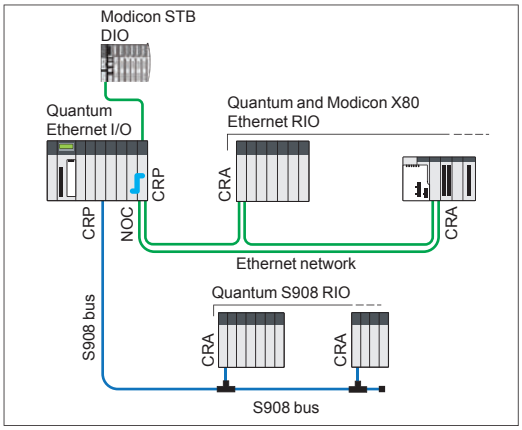

Configuration of dedicated I/O on Quantum Ethernet I/O network and on S908 bus in a single PLC.

Presentation (continued)

Advantages of the offer (continued)

Compatibility with references in the Quantum offer *(1)*

The Quantum Ethernet I/O offer is fully compatible with the references in the Quantum offer; CPUs, power supplies, I/O modules, racks, etc *(1)*.
This compatibility simplifies:

- Implementation of Ethernet I/O architectures
- Migration from a S908 bus architecture to a Quantum Ethernet I/O architecture.

It is also possible to configure a S908 bus and a Quantum Ethernet I/O network in a single PLC. This makes it possible to extend existing installations while taking advantage of the functions of the Quantum Ethernet I/O offer *(2)*.

Compatibility with references in the Modicon X80 offer

The Quantum Ethernet I/O offer is fully compatible with the references in the Modicon X80 offer: CPUs, power supplies, I/O modules, racks, etc.
However, the capacity of Modicon X80 I/O drops depends on the CRA Ethernet drop adaptor module used, see page 2/17.

Rack Viewer function *(3)*

The Rack Viewer function provides access to Ethernet RIO data via a web browser.

Predefined configurations for ConneXium managed switches

The use of ConneXium managed switches specifically for Quantum Ethernet I/O architectures is simplified using 15 predefined configuration files (included on the Unity Pro ⩾ V7.0 DVD). These configurations are optimized to meet the requirements of the majority of Ethernet architectures, see page 2/15.

Types of Quantum Ethernet I/O architecture *(4)*

The Quantum Ethernet I/O offer can be used in three types of architecture:

- Ethernet RIO architectures: standard of for long distances
- Architectures with combined Ethernet RIO and Ethernet DIO devices on the same physical network: standard or high availability and extended device integration capability
- Quantum Ethernet I/O Hot Standby architectures

Ethernet RIO architectures

Ethernet RIO architecture, standard

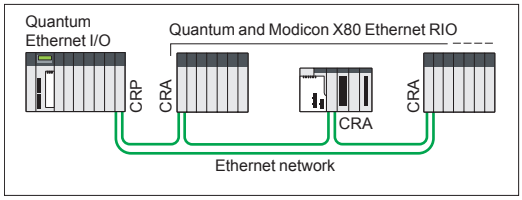

Ethernet RIO architecture, standard

Simple ring (Daisy Chain Loop) architecture consisting of a local Quantum Ethernet drop containing a 140CRP31200 head adaptor module and Quantum or Modicon X80 Ethernet RIO drops containing a CRA drop adaptor:

- 140CRA31200: Quantum RIO Ethernet drop adaptor
- BMXCRA31200: Modicon X80 RIO Ethernet drop adaptor, without SERVICE port
- BMXCRA31210: Modicon X80 RIO Ethernet drop adaptor, with SERVICE port

The links are achieved via RJ45 Ethernet copper cables. The maximum distance between each rack is 100 m.

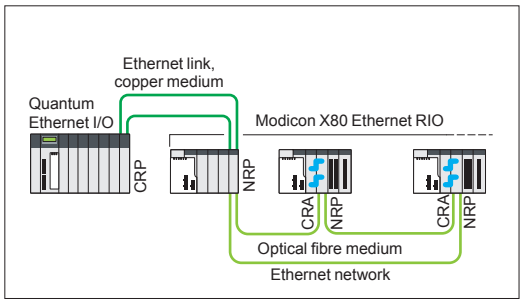

Ethernet RIO architecture, long distance

Ethernet RIO architecture, long distance

Standard Ethernet RIO architecture comprising one or more remotely located Quantum or Modicon X80 Ethernet drops, via integrated NRP optical fibre repeaters.
There are two types of NRP repeater for the Quantum Ethernet RIO drops:

- 140NRP31200: multimode optical fibre repeater (remote location up to 2 km)
- 140NRP31201: single mode optical fibre repeater (remote location up to 16 km)

There are two types of NRP repeater for the Modicon X80 Ethernet drops:

- BMXNRP0200: multimode optical fibre repeater (remote location up to 2 km)
- BMXNRP0201: single mode optical fibre repeater (remote location up to 16 km)

The NRP repeaters are linked to CRA drop adaptors by means of Ethernet Interlink cables in order to access the functions of these drop adaptors.

(1) The Quantum Ethernet I/O offer is not compatible with communication modules and application-specific modules which cannot be installed on a remote station.
(2) This function is only available with 140CPU6●2●● CPUs.
(3) Requires Ethernet module 140NOC78000 or 140NOE771●1, linked to the CRP Ethernet head adaptor in the Quantum local rack (see page 2/16).
(4) Requires Unity Pro Extra Large software ⩾ V7.0.

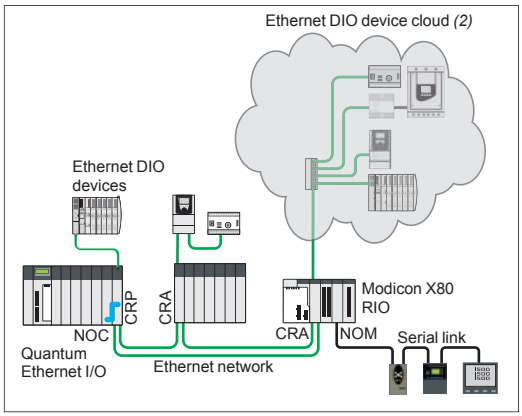

Architecture with Ethernet RIO and Ethernet DIO devices, standard

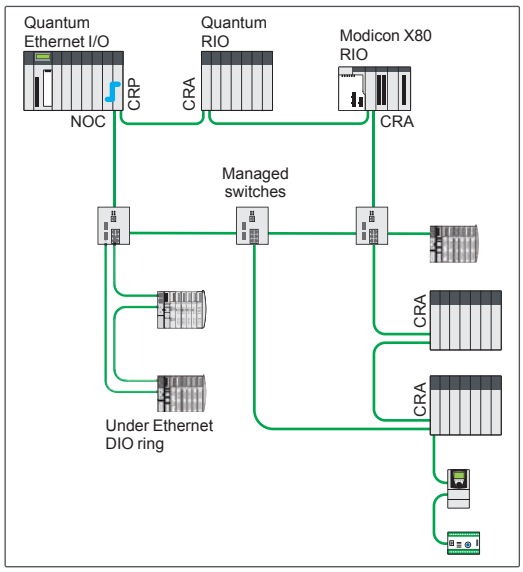

Ethernet RIO and Ethernet DIO device architecture, high availability and extended integration capability

Types of Quantum Ethernet I/O architecture (continued) *(1)*

Ethernet RIO and Ethernet DIO device architectures

Architecture with Ethernet RIO and Ethernet DIO devices, standard

This architecture has the advantage of being able to combine Ethernet RIO (Quantum or Modicon X80) and Ethernet DIO devices on the same physical network: Modicon STB distributed I/O, Altivar drive, Tesys T motor protection, etc. *(2)*.

In the example opposite:

- Ethernet DIO devices are connected to the SERVICE ports of CRP Ethernet head adaptors and CRA Ethernet drop adaptors
- Ethernet DIO devices are managed by the Ethernet DIO head adaptor module (140NOC78000), linked to the CRP Ethernet head adaptor by an Ethernet Interlink cable
- Modbus serial link devices are integrated in the network via the serial link (BMXNOM0200) of the Modicon X80 drop

This type of standard architecture without switches simplifies setting up and maintenance operations.

Ethernet RIO and Ethernet DIO device architecture, high availability and extended integration capability

This architecture integrates ConneXium managed DRS (Dual Ring Switch) switches into the Ethernet RIO network. 15 predefined configurations which can be loaded into the switches simplify their implementation.

The use of DRS switches provides enhanced capacity for the integration of devices, according to different types of topology:

- Under Ethernet RIO ring
- Under Ethernet DIO device ring
- Ethernet DIO device clouds
- Optical fibre medium for long distance remote location, etc.

The advantages of this architecture are:

- Reduced wiring costs
- Deterministic data exchanges between the PLC and the Ethernet RIO
- High availability of Ethernet DIO devices which can be connected in daisy chain loop topology (limited to devices compatible with this type of architecture)
- Functions offered by the DRS switches:
  - The secondary rings can be linked to the main ring by two DRS switches, which improves availability
  - Redundancy of the primary ring with a Hot Standby “Primary/Standby” operating mode for the two DRS switches managing the same secondary ring

Maximum distance between each ConneXium managed switch:

- 100 m with copper medium
- 2 km with multimode optical fibre medium
- 16 km with single mode optical fibre medium

(1) Requires Unity Pro Extra Large software ≥ V7.0.
(2) Please refer to the relevant product catalogues on our website www.schneider-electric.com.

Modicon Quantum automation platform

Quantum Ethernet I/O

Ethernet Hot Standby architectures

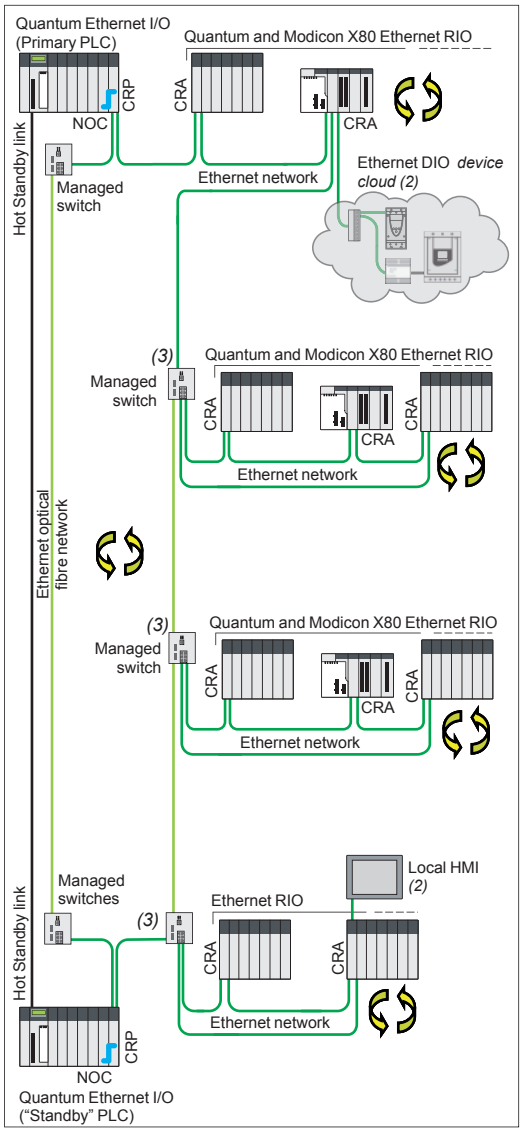

Quantum Hot Standby Ethernet I/O architecture, long distance

Types of Quantum Ethernet I/O architecture (continued) *(1)*

Hot Standby system

The Unity Hot Standby system is used for the the most demanding applications, in terms of the availability of their control/command system, as no interruption of the process can be tolerated. This system ensures global availability of the Hot Standby CPU and Ethernet I/O devices.

At the heart of this architecture are two PLC racks ("Primary" and "Standby") with identical hardware configurations, based on 140CPU67●6● Unity Hot Standby CPUs, connected via a high-speed optical fibre cable. The volume of data exchanged between the "Primary" and "Standby" PLCs can reach 1.5 MB depending on the CPU.

The "Primary" PLC executes the application program and controls the I/O, while the "Standby" PLC remains in the background.
In the event of an unexpected failure affecting the "Primary" PLC, the "Standby" system switches over automatically, changing over execution of the application program and control of the I/O to the Standby PLC with an up-to-date data context. Once the changeover is complete, the "Standby" PLC becomes the "Primary" PLC. Once the faulty PLC has been repaired and reconnected to the standby system, it takes the role of the "Standby" PLC.
The changeover is performed smoothly at the outputs and is completely transparent to the process.

The Hot Standby system with Unity Pro software thus increases productivity by minimizing process downtime.

Hot Standby system based on Ethernet RIO architecture

The Hot Standby system based on the remote I/O (RIO) architecture is used for sensitive processes which require an I/O control takeover time within the region of the PLC scan time.
As the Ethernet RIO drops are synchronized with the PLC CPU scan time, the CPU changeover is carried out smoothly at the outputs, i.e. it is bumpless.

Ethernet head adaptor modules 140NOC78000 and control network head adaptor modules 140NOC78100 are compatible with Hot Standby Ethernet RIO architectures. Automatic switching of the IP address of these modules ensures transparent addressing, even in the event of a CPU changeover.

Maximum distance between each ConneXium managed switch:
- 100 m with copper medium
- 2 km with multimode optical fibre medium
- 16 km with single mode optical fibre medium

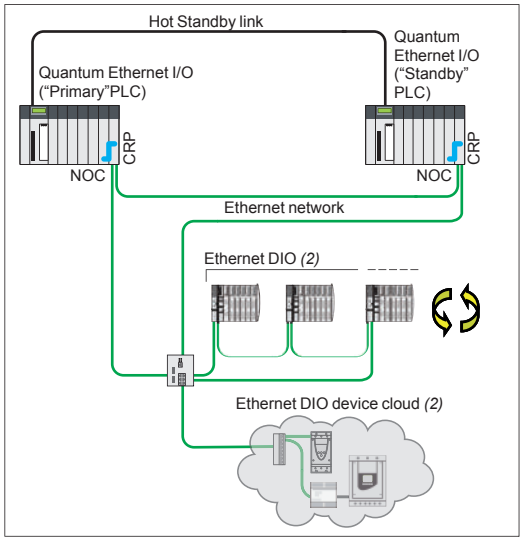

Quantum Hot Standby Ethernet I/O architecture with Ethernet DIO devices, without CRA Ethernet drop adaptor

Hot Standby system based on Ethernet DIO device architecture

In this type of Hot Standby architecture without Ethernet RIO drops, the CRA Ethernet drop adaptor is not required.
Only a CRP Ethernet head adaptor and a 140NOC78000 RIO head adaptor, connected by an Ethernet Interlink cable, are required in each "Primary" and "Standby" PLC (see page 2/16).

(1) Requires Unity Pro Extra Large software ≥ V7.0.
(2) Please refer to the relevant product catalogues on our website www.schneider-electric.com.
(3) As well as the secondary ring, an Ethernet DIO device cloud can be connected to each managed switch.

Overview: page 2/6 | Description: page 2/15 | Architectures: page 2/19 | References: page 2/22

Schneider Electric

Modicon Quantum automation platform

Quantum Ethernet I/O

CRP Ethernet head adaptor

Quantum CRA Ethernet drop adaptor

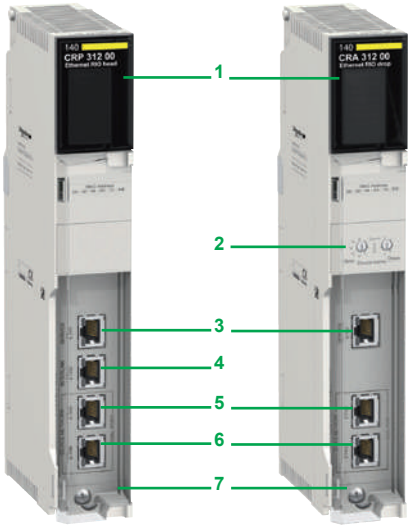

140CRP31200 *140CRA31200*

CRP Ethernet head adaptors and CRA Ethernet drop adaptors *(1)(2)*

Presentation

A Quantum Ethernet I/O architecture with Ethernet RIO drops requires the use of CRP and CRA Ethernet adaptors:

- 140CRP31200 head adaptor installed in the Quantum local rack
- 140CRA31200 drop adaptor installed in each Quantum Ethernet RIO drop

Each of these adaptors is connected by Ethernet cables equipped with RJ45 connectors.
The dual Ethernet network connection port on each adaptor allows *Daisy Chain Loop* connections using the RSTP protocol (*Rapid Spanning Tree Protocol*).

Each adaptor uses one slot in the Quantum rack.
These adaptors are also offered in Conformal coating version for harsh environments (see page 8/2).

Capacity of Quantum Ethernet I/O architectures, with Quantum RIO drops

- 1 Quantum CPU drop equipped with a 140CPU6●●●● type CPU that can have one primary rack and one secondary rack *(4)*
- Up to 31 Quantum Ethernet RIO drops, limited to a maximum of 31 RIO drops (Quantum + Modicon X80) *(3)*; each Quantum CPU drop can comprise one primary rack and one secondary rack *(4)*
- Distance:
  - 100 m between drops (copper medium)
  - 2 km between each 140NRP31200, BMXNRP0200 and ConneXium managed switch, with a multimode optical fibre cable (5)
  - 16 km between each 140NRP31201, BMXNRP0201 and ConneXium managed switch, with a single mode optical fibre cable (5)
- Up to 15 ConneXium managed switches *(6)*
- 1 secondary ring level per ConneXium managed switch
- Up to 128 Ethernet DIO devices per 140NOC78000 Ethernet head adaptor
- Up to 64 Ethernet DIO devices per 140NOC78100 Ethernet head adaptor with integrated router function

Description

1. Display block indicating the module status
2. On 140CRA31200 adaptor: rotary switches for addressing Ethernet RIO drops (00…159)
3. Dedicated RJ45 SERVICE port for remote service tools such as a PC with Unity Pro *(7)*, network diagnostics software (ConneXium Network Manager, etc.) or with network analysis tools (Port Mirroring, etc.), or an HMI terminal, etc.
   This port can also be used to connect Ethernet DIO devices such as Modicon ETB I/O, Altivar variable speed drives, TeSys T motor protection, etc. *(8)*.
4. RJ45 INTERLINK port on 140CRP31200 adaptor for connecting the Ethernet Interlink cable
5. RJ45 DEVICE NETWORK port for connection to the Ethernet network
6. RJ45 DEVICE NETWORK port for connection to the Ethernet network
7. Removable hinged door

(1) For additional characteristics, see our website www.schneider-electric.com.
(2) Requires Unity Pro Extra Large software ≥ V7.0.
(3) 140CPU67060 models support Modicon X80 RIO drops only and a maximum of 6 drops, 140CPU67160 models support a maximum of 16 Modicon X80 RIO drops.
(4) Requires two 140XBE10000 rack expansion modules (one in the primary rack and one in the secondary rack) and a 140XCA7170● extension cable (1, 2 or 3 m) for connecting these two modules. See page 2/23.
(5) See page 2/18.
(6) Each ConneXium switch counts as two Ethernet RIO drops.
(7) To connect Unity Pro to the SERVICE port, the 140NOC78000 Ethernet DIO head adaptor or 140NOE771●1 Ethernet module and the Ethernet Interlink cable must be used. See page 2/16.
(8) Please refer to the relevant product catalogues on our website www.schneider-electric.com.

Modicon Quantum automation platform

Quantum Ethernet I/O

NOC Ethernet DIO head adaptor module
NOC Ethernet control network head adaptor

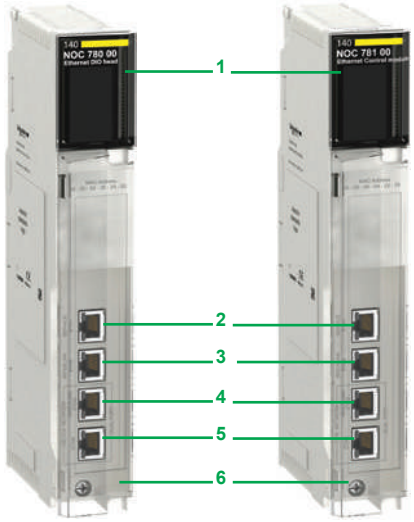

140NOC78000 *140NOC78100*

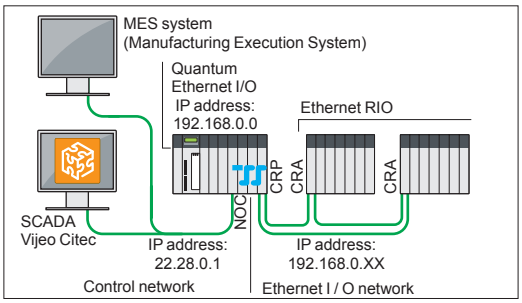

Router integrated in the 140NOC78100 Ethernet module managing several IP addresses

Example of NOC and CRP module combination: 140NOC78100 / 140NOC78000 / 140CRP31200

Ethernet DIO head adaptor and control network head adaptor modules NOC *(1)(2)*

Presentation

Two Ethernet 140NOC78●00 adaptors modules are specifically dedicated for Quantum Ethernet I/O architectures:

■ The 140NOC78000 DIO Ethernet head adaptor, installed in the Quantum local rack (4 adaptors max.). This adaptor manages the Ethernet DIO devices connected to the Quantum Ethernet I/O network.

■ The 140NOC78100 control network head adaptor module, installed in the Quantum local rack (1 adaptor max.). This adaptor manages exchanges with the control network, in which other PLCs and/or supervisors may be present. It is equipped with integrated router which allows routing between networks.

The Ethernet DIO devices can be connected in star, ring or network topology:

■ On the SERVICE port of CRP Ethernet head adaptors or CRA Ethernet drop adaptors or Quantum or Modicon X80 Ethernet RIO drops, or on the Ethernet ports of DRS switches. In this case, a link between the NOC Ethernet DIO head adaptor and the CRP is necessary for the Ethernet DIO devices to be integrated into the Quantum Ethernet I/O network (see below).

■ On the ports of the NOC Ethernet DIO head adaptor *(3)*, directly, without any link with the CRP Ethernet head adaptor. In this case, the Ethernet DIO devices are independent of the Quantum Ethernet I/O network.

The 140NOC78100 module has an integrated router which can manage several IP addresses and which provides transparency between the control network and the Quantum Ethernet I/O network. This function limits the use of an external router and makes setting up easier. A link is required between the NOC module and the CRP Ethernet head adaptor or the NOC Ethernet DIO head adaptor, depending on the configuration.

Capacity of NOC Ethernet modules

■ 140NOC78000 Ethernet DIO head adaptor module:
- □ Maximum of four NOC modules, installed in the Quantum local rack
- □ Maximum of 128 Ethernet DIO devices per module

■ 140NOC78100 Ethernet control network head adaptor module:
- □ Maximum of one NOC module, installed in the Quantum local rack
- □ Maximum of 64 Ethernet DIO devices per module

Description

1 Display block indicating the module status
2 Dedicated RJ45 SERVICE port for remote service tools or for connection of Ethernet DIO devices (see CRP and CRA module SERVICE port, page 2/15)
3 RJ45 INTERLINK port for connection of the Ethernet Interlink cable
4 RJ45 DEVICE NETWORK port for connection to the Ethernet network
5 RJ45 DEVICE NETWORK port for connection to the Ethernet network
6 Removable hinged door

Combination of Ethernet modules and CRP Ethernet head adaptor *(3)*

The two NOC Ethernet modules **(7,8)** are linked to the CRP Ethernet head adaptor module **(9)** by means of Ethernet Interlink cables **(10)**. Multiple combinations are possible:

7 Ethernet control network head adaptor module 140NOC78100
8 Ethernet DIO head adaptor module 140NOC78000
9 Ethernet head adaptor 140CRP31200
10 Ethernet Interlink cable TCSECN3M3M1S4/1S4U

(1) For additional characteristics, see our website www.schneider-electric.com.
(2) Requires Unity Pro Extra Large software ≥ V7.0.
(3) The 140NOE771 Ethernet Modbus TCP modules ●1 in installed bases can also manage Ethernet DIO devices in a Quantum Ethernet I/O system. These modules do however have performance restrictions which are not present in the 140NOC78000 module. In particular, only a 140NOE771●1 module can be part of the Quantum Ethernet I/O network; please consult our Customer Care Centre.

Modicon Quantum automation platform

Quantum Ethernet I/O

Modicon X80 CRA Ethernet drop adaptors

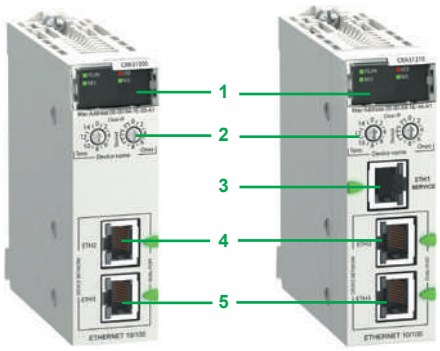

BMXCRA31200 *BMXCRA31210*

Modicon X80 CRA Ethernet drop adaptors *(1)(2)*

Presentation

A Quantum Ethernet I/O architecture with Modicon X80 RIO drops requires the use of a dedicated CRA drop adaptor in each Modicon X80 drop:
- Standard drop adaptor BMXCRA31200 (capacity, see below)
- High performance drop adaptor BMXCRA31210 (capacity, see below)

These drop adaptors are connected by Ethernet cordsets fitted with RJ45 connectors. The dual Ethernet network connection port on each drop adaptor allows *Daisy Chain Loop* connections using the RSTP protocol (*Rapid Spanning Tree Protocol*).

Each module uses one slot in the Modicon X80 rack.
The BMXCRA31210 adaptor is also available in a conformal coating version for harsh environments.

Capacity of Quantum Ethernet I/O architectures with Modicon X80 Ethernet RIO

The number of X80 drops behind a Quantum CPU6●●●● depends on the reference:
- For 140CPU67060 HSBY CPUs:
  - Up to 6 Modicon X80 RIO drops (only support Modicon X80)
- For 140CPU651●● standard CPUs and the 140CPU67160 HSBY CPU:
  - Up to 16 Modicon X80 RIO drops, limited to a maximum of 31 RIO drops (Quantum + Modicon X80)
- For 140CPU65260, 140CPU65860, 140CPU6726● and 140CPU67861 CPUs:
  - Up to 31 Modicon X80 RIO drops, limited to a maximum of 31 RIO drops (Ethernet Quantum and Modicon X80)
- Each Modicon X80 RIO drop can comprise one primary rack and one secondary rack *(3)*
- Distance:
  - 100 m between stations (copper medium)
  - 2 km between Modicon X80 drops, with BMXNRP0200 multimode optical fibre repeaters
  - 16 km between Modicon X80 drops, with BMXNRP0201 multimode optical fibre repeaters

Capacity of Modicon X80 CRA drop adaptors

Type of module	BMXCRA31200 "standard"	BMXCRA31210 "high performance"
Primary racks per drop	Up to 2	Up to 2
SERVICE port	–	1
Discrete I/O points	Up to 128	Up to 1024
Analog I/O points	Up to 16	Up to 256
Expert modules supported:		
■ serial link	–	BMXNOM0200
■ time and date stamping at 1 ms	–	BMXERT1604T
■ counting	–	BMXEHC0200/0800
CCOTF function	–	Yes
Time and date stamping	–	10 ms

Description

1. Display block indicating the module status
2. Rotary switches for addressing Ethernet RIO drops (00…159)
3. On BMXCRA31210 module: dedicated RJ45 SERVICE port for remote service tools such as a PC, an HMI terminal or Ethernet DIO devices (identical to the SERVICE port on Quantum CRP/CRA modules, see page 2/14)
4. RJ45 DEVICE NETWORK port for connection to the Ethernet network
5. RJ45 DEVICE NETWORK port for connection to the Ethernet network

(1) For additional characteristics, see our website www.schneider-electric.com.
(2) Requires Unity Pro Extra Large software ≥ V7.0.
(3) Requires two BMXXBE1000 rack expansion modules (one in the primary rack and one in the secondary rack) and a BMXXBC●●●K extension cable (0.8, 2 or 28 m) for connecting these two modules. See page 2/24.

Modicon Quantum automation platform

Quantum Ethernet I/O

Modicon X80 NRP RIO drop optical repeaters, ConneXium managed switches

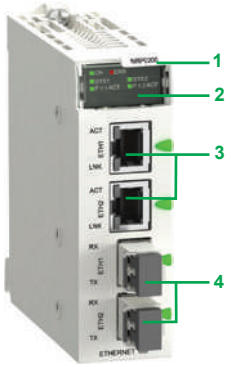

BMXNRP020●

Modicon X80 Ethernet RIO drop optical repeaters *(1)(2)*

Presentation

BMXNRP0200/0201 optical fibre repeaters are an alternative to the use of the optical fibre repeaters for Quantum Ethernet RIO drops, 140NRP31200 and 140NRP31201, or ConneXium managed dual ring switches (DRS), for optical fibre communications over long distances, in Quantum Ethernet I/O systems.
When inserted in Modicon X80 RIO drops, BMXNRP0200/0201 optical fibre repeaters make it possible to:
- Extend the total distance of the Quantum Ethernet I/O network, when Ethernet RIO drops are located in areas of the factory more than 100 m away
- Enhance immunity to noise
- Resolve earthing problems, between sites which have different earthing methods

NRP repeaters can be installed on the primary ring or on secondary rings. These modules cannot however be used to connect secondary rings to the primary ring.
The BMXNRP0200 repeater for multimode optical fibre allows remote location up to 2 km.
The BMXNRP0201 repeater or single mode optical fibre allows remote location up to 16 km.
Depending on the configuration, the NRP repeater must be linked to the CRA adaptor of the drop where it is installed, via one or two Ethernet Interlink cables.

Description

1 Module reference
2 Display block indicating the module status
3 RJ45 Ethernet ports. Two LEDs LNK and ACT indicate the state of each port
4 Optical fibre ports with SFP transceiver for LC type connector

TCSESM083F23F1

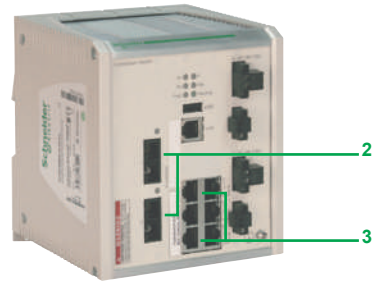

TCSESM063F2CU1
TCSESM063F2CS1

ConneXium managed switches *(3)*

Presentation

There are three ConneXium managed DRS (Dual Ring Switch) models available specifically for Quantum Ethernet I/O architectures. They are used in the following situations:
- For remote racks located at a distance of more than 100 m
- Use of optical fibre media:
  - For remote racks located over long distances: 2 km (multimode optical fibre) or 16 km (single mode optical fibre)
  - In environments subject to interference
  - Between sites with different earth equipotentiality
- Architectures with combined Ethernet RIO and Ethernet DIO devices
- Implementation of a secondary ring

ConneXium managed switches specific to medium

ConneXium managed switch	Copper port	Multimode optical fibre port	Single mode optical fibre port	Distance between switches
	RJ45 shielded connectors	Duplex SC connectors		
TCSESM083F23F1	**1** : 8 x 10/100 BASE-TX ports	–	–	100 m
TCSESM063F2CU1	**3** : 6 x 10/100 BASE-TX ports	**2** : 2 x 10/100 BASE-FX ports	–	2 km
TCSESM063F2CS1	**3** : 6 x 10/100 BASE-TX ports	–	**2** : 2 x 10/100 BASE-FX ports	16 km

Predefined configuration files *(4)*

For ease of implementation of the 3 switches described above, 15 predefined configuration files are available for building all validated and tested architectures. These configuration files are included, as standard, on the Unity Pro V7.0 DVD.
The parameters of the switch(es) present on the Ethernet network can then be easily set with the chosen configuration using a PC equipped with a web browser or Ethernet Switch Configurator software. The switch is configured immediately.
Ethernet Switch Configurator software is also available on the ConneXium Resource CD-ROM.

(1) For additional characteristics, see our website www.schneider-electric.com.
(2) Requires Unity Pro Extra Large software ≥ V7.0.
(3) The functions described are only available for the three ConneXium managed switches mentioned on this page: (TCSESM083F23F1/063F2CU1/063F2CS1).
(4) All configurations can also be used in Ethernet Hot Standby architectures.

Modicon Quantum automation platform

Quantum Ethernet I/O

Complex architecture example

Complex architecture example

The complex architecture below illustrates the extensive possibilities of the Quantum Ethernet I/O offer:

- High availability with Hot Standby CPUs **(1)**
- Easy integration of the I/O network with supervisors in the control network, due to the 140NOC78100 Ethernet module **(2)** and its integrated router function
- Optimized wiring with RIO and DIO control via a single medium: the DIO are controlled via a 140NOC78000 Ethernet module **(3)**, which is connected directly to the 140CRP31200 head adaptor module
- Increased I/O capacity: no more limitation of modules in Quantum drop configurations **(4)**. It is also now possible to add entire I/O drops without stopping the PLC (addition of drops online)
- High availability of secondary rings with managed switch redundancy function **(5)**: if one fails, the other takes over
- Long distance optimized by the optical fibre converter **(6)**, directly in the Modicon X80 rack
- Simplified integration of devices via a serial link **(7)** (for example: measuring centre, variable speed drive, motor starters, protection relays, etc.). FTD/DTM technology makes it possible to configure and debug devices transparently via the Ethernet network, from any supervisor
- Under DIO device ring for greater availability **(8)**
- Great flexibility due to integration of DIO devices **(9)** or other diagnostic/configuration tools on any drop SERVICE port or on the DIO port of a managed switch

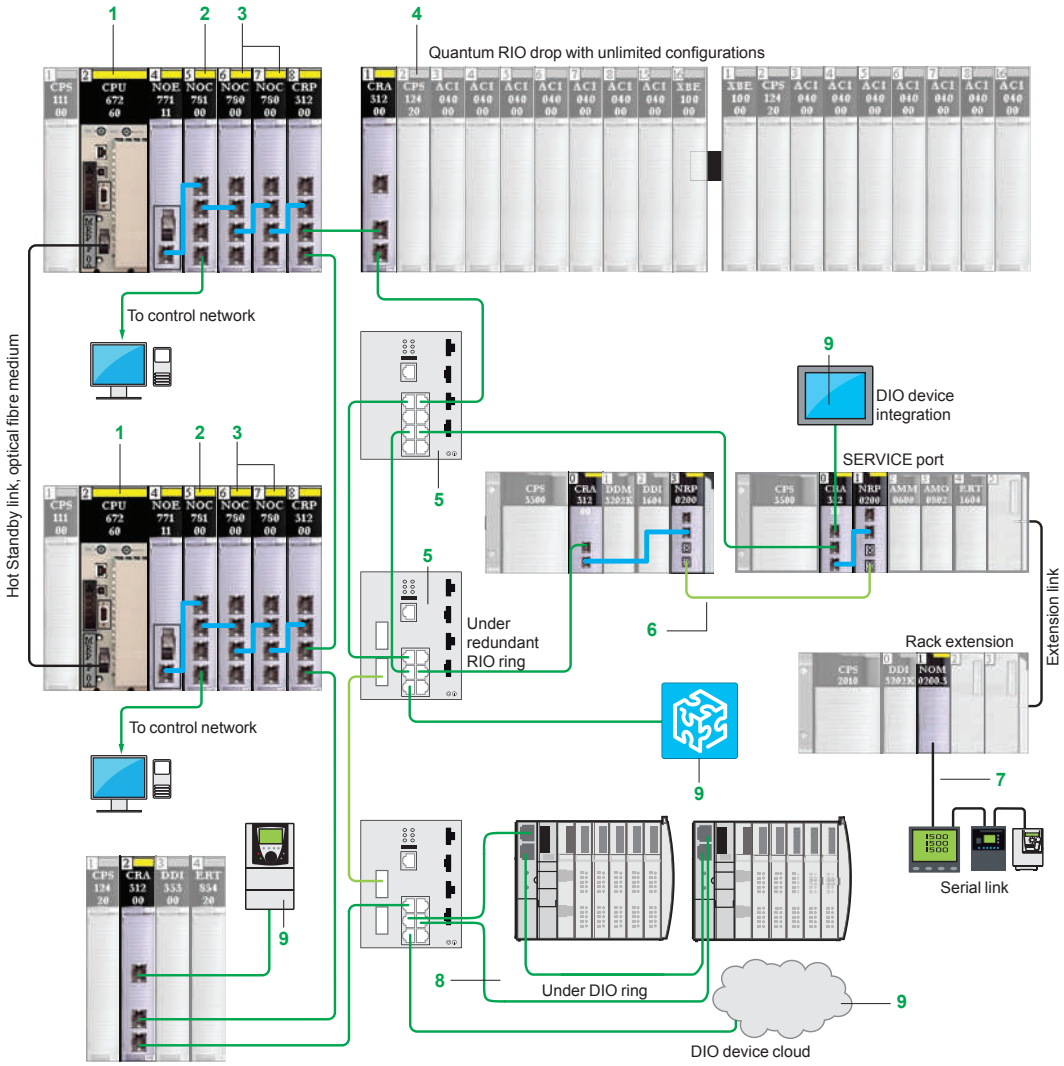

Ethernet link, optical fibre medium

Ethernet link, copper medium

Modicon Quantum automation platform

Quantum Ethernet I/O

Example architecture

Example architecture for a tunnel

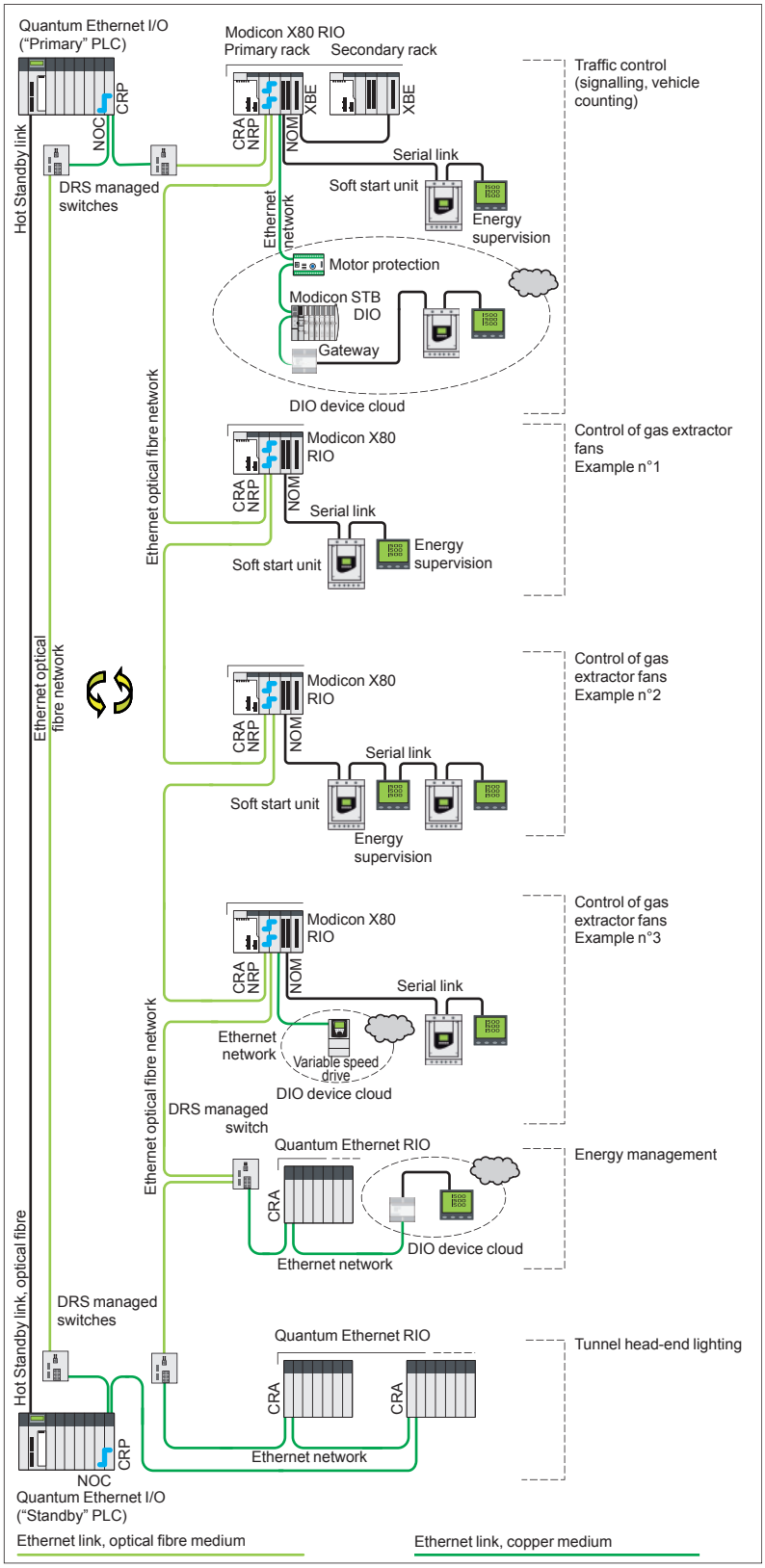

Quantum Ethernet I/O Hot Standby architecture: road tunnel management

Modicon Quantum automation platform

Quantum Ethernet I/O

Example architecture

Process type architecture (e.g.: biomass factory)

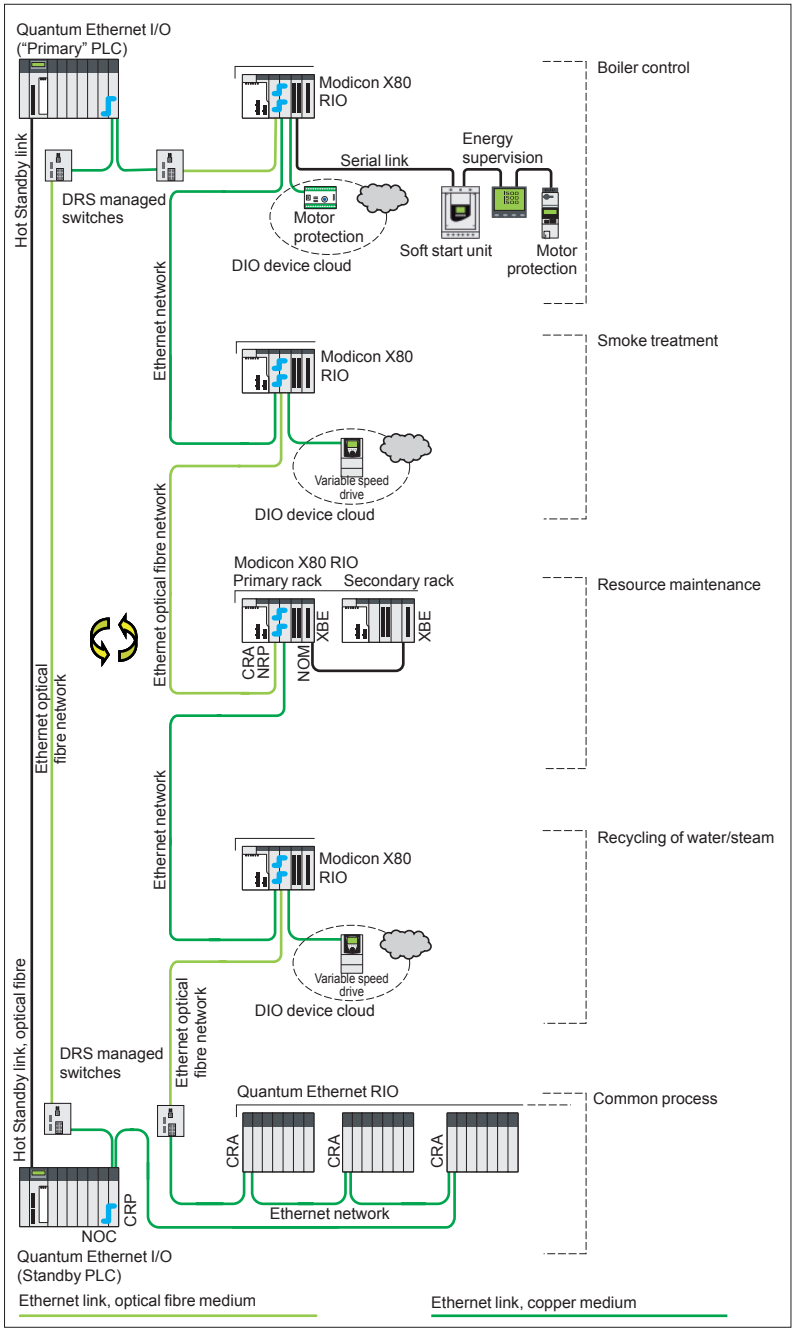

Process type architecture (for example: biomass factory)

Modicon Quantum automation platform

Quantum Ethernet I/O

Quantum Ethernet I/O standard topologies

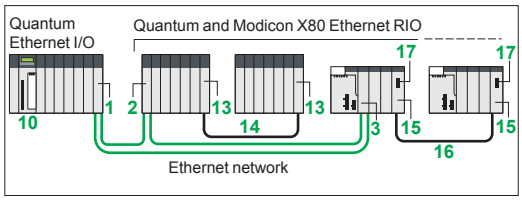

Ethernet RIO architecture, standard

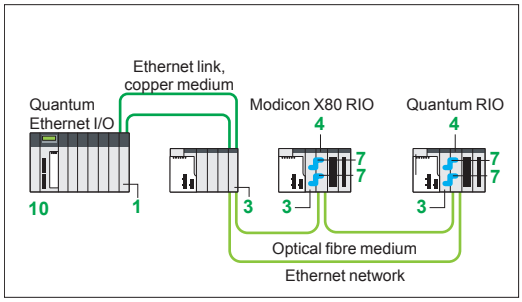

Ethernet RIO architecture, long distance

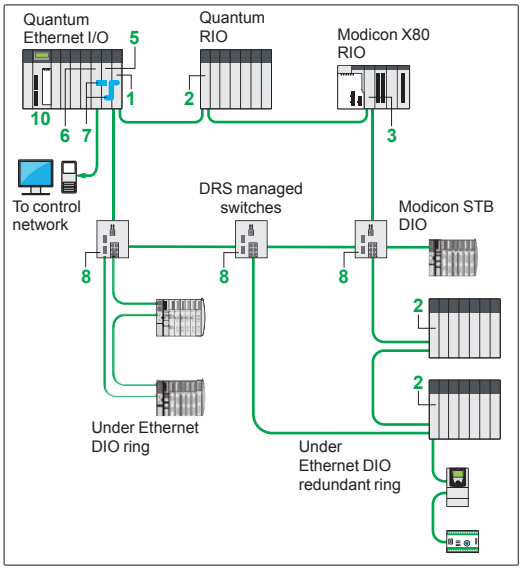

Ethernet RIO and Ethernet DIO device architecture, high availability and extended integration capability

References *(1)*

Ethernet head and drop adaptors *(2)*

Description	SERVICE port	Item *(3)*	Reference	Weight kg/*lb*
Quantum Ethernet I/O head adaptor Provide 1 adaptor per Quantum Ethernet I/O CPU rack	1	1	**140CRP31200** *(4)*	–
Quantum Ethernet RIO drop adaptor Provide 1 module per Quantum Ethernet RIO drop	1	2	**140CRA31200** *(4)*	–
Modicon X80 Ethernet RIO drop adaptor Provide 1 module per Modicon X80 Ethernet RIO drop	–	3	**BMXCRA31200**	–
	1	3	**BMXCRA31210** *(4)*	–

Ethernet RIO drop optical repeaters *(2)*

Description	Optical fibre	Item *(3)*	Reference	Weight kg/*lb*
Quantuam Ethernet RIO drop optical repeaters	Multimode	4	**140NRP31200**	–
	Single mode	4	**140NRP31201**	–
Modicon X80 Ethernet RIO drop optical repeaters	Multimode	4	**BMXNRP0200**	–
	Single mode	4	**BMXNRP0201**	–

Ethernet communication modules and cordsets *(2)*

Description		Item *(3)*	Reference	Weight kg/*lb*
Quantum Ethernet DIO head adaptor module Required if there are Ethernet DIO devices in the architecture *(7)*		5	**140NOC78000**	0.554/ *1.221*
Quantum Ethernet control network head adaptor Required if there is a control network in the architecture		6	**140NOC78100**	0.554/ *1.221*
Ethernet Interlink cables Length 1 m	Standard version	7	**TCSECN3M3M1S4**	–
	UL version	7	**TCSECN3M3M1S4U**	–

Dedicated ConneXium managed switches *(5)(6)*

Copper port	Multimode optical fibre port	Single mode optical fibre port	Item *(3)*	Reference *(4)*	Weight kg/*lb*
RJ45 shielded connectors	Duplex SC connectors				
8 x 10/100 BASE-TX ports	–	–	8	**TCSESM083F23F1**	1.000/ *2.205*
6 x 10/100 BASE-TX ports	2 x 10/100 BASE-FX ports	–	9	**TCSESM063F2CU1**	1.000/ *2.205*
	–	2 x 10/100 BASE-FX ports	9	**TCSESM063F2CS1**	1.000/ *2.205*

Quantum standard CPUs

CPU	Maximum application memory capacity		Item *(3)*	Reference *(4)*	Weight
Clock frequency	Available internal RAM (with located variables)	With PCMCIA card			
MHz	KB	KB			kg/*lb*
166	768	7168	10	**140CPU65150**	–
266	1024	7168	10	**140CPU65160**	–
	3072	7168	10	**140CPU65260**	–
	11264	11264	10	**140CPU65860**	–

(1) For additional characteristics, see our website www.schneider-electric.com.
(2) Requires Unity Pro Extra Large software ≥ V7.0, (see page 2/25).
(3) For items 11 to 14, see page 2/23; 15 to 17, see page 2/24.
(4) Conformal coating version for harsh environments. In this case, add the letter "C" to the end of the reference.
(5) ConneXium managed switches validated for Quantum Ethernet I/O architectures.
(6) Predefined configuration files included on Unity Pro ≥ V7.0. DVD.
(7) The 140NOE771 Ethernet Modbus TCP modules ●1 in installed bases can also manage Ethernet DIO devices in a Quantum Ethernet I/O system. These modules do however have performance restrictions which are not present in the 140NOC78000 module. In particular, only a 140NOE771●1 module can be part of the Quantum Ethernet I/O network; please consult our Customer Care Centre.

Modicon Quantum automation platform

Quantum Ethernet I/O

Quantum Ethernet I/O Hot Standby topologies
Rack extension for Quantum RIO drop

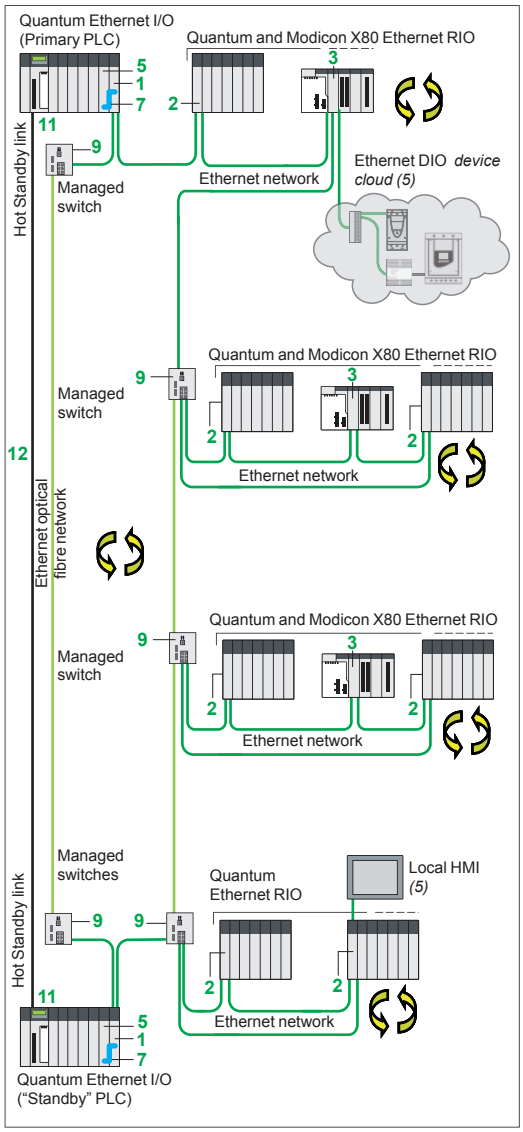

Quantum Hot Standby Ethernet I/O architecture, long distance

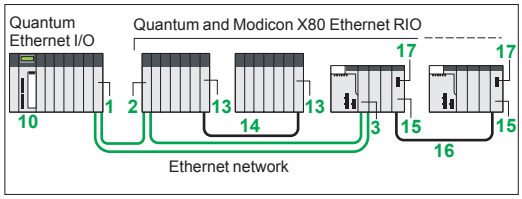

Ethernet RIO architecture, standard

References (continued) *(1)*

Quantum Hot Standby CPUs

Hot Standby CPU	Maximum application memory capacity		Optical fibre		Item *(2)*	Reference *(3)*	Weight
Clock frequency	**Available internal RAM** (with located variables)	**With PCMCIA card**	**Type and max. distance**				
MHz	**KB**	**KB**		**km**			**kg/*lb***
266 *(4)*	1024	7168	Multi-mode	2	11	**140CPU67160**	1.424/ *3.139*
	3072	7168	Multi-mode	2	11	**140CPU67260**	1.424/ *3.139*
	3072	7168	Single mode	16	11	**140CPU67261**	1.424/ *3.139*
	11264	–	Single mode	16	11	**140CPU67861**	1.424/ *3.139*

Optical fibre cable for Hot Standby architecture *(6)*

Description	Length m/*ft*	Item *(2)*	Reference	Weight kg/*lb*
62.5/125 µm multimode optical fibre cables equipped with MT-RJ connectors For interconnection of the Ethernet port on 140CPU67●60 CPUs ("Primary" and "Standby") (**11**)	3/ *9.84*	12	**490NOR00003**	–
	5/ *16.40*	12	**490NOR00005**	–

Rack extension for Ethernet RIO drop

Description	Length m/*ft*	Item *(2)*	Reference	Weight kg/*lb*
Quantum rack expansion module Provide 2 modules: 1 for the primary rack, 1for the secondary rack	–	13	**140XBE10000** *(3)(4)*	–
Cable for Quantum rack expansion module	1/ *3.28*	14	**140XCA71703**	–
	2/ *6.56*	14	**140XCA71706**	–
	3/ *9.84*	14	**140XCA71709**	–

(1) For additional characteristics, see our website www.schneider-electric.com.
*(2) For items **1** to**10**, see page 2/22; **15** to **17**, see page 2/24.*
(3) Conformal coating version for harsh environments. In this case, add the letter "C" to the end of the reference.
(4) Maximum data exchange volume:
- 140CPU67160: 1 MB
- 140CPU6726●: 1.5 MB
(5) Please refer to the relevant product catalogues on our website www.schneider-electric.com.
(6) Additional optical fibre cable choices (type, length, etc.) are available in the Schneider Electric Accessories range. For more information, visit www.schneider-electric.com.

Modicon Quantum automation platform

Quantum Ethernet I/O

Rack extension for Modicon X80 RIO drop

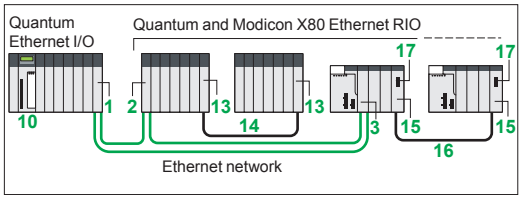

Ethernet RIO architecture, standard

References (continued) *(1)*

Rack extension for Modicon X80 Ethernet RIO drop

Description	Item *(2)*	Reference	Weight kg/*lb*
Modicon X80 rack expansion module Standard module for mounting in each rack (XBE slot) and allowing the interconnection of 2 racks max.	15	**BMXXBE1000**	0.178/ *0.392*
Modicon X80 rack expansion kit Complete kit for 2-rack configuration comprising: - 2 BMXXBE1000 rack expansion modules - 1 extension cordset, length 0.8 m/*2.62 ft* BMXXBC008K - 1 TSXTLYEX line terminator (pack of 2)	 15 16 17	**BMXXBE2005**	0.700/ *1.543*

Description	Type of connector	Length m/*ft*	Item *(2)*	Reference	Weight kg/*lb*
Bus X preformed extension cordsets with two 9-pin SUB-D connectors	Elbowed	0.8/ *2.62*	16	**BMXXBC008K**	0.165/ *0.364*
		1.5/ *4.92*	16	**BMXXBC015K**	0.250/ *0.551*
		3/ *9.84*	16	**BMXXBC030K**	0.420/ *0.926*
		5/ *16.40*	16	**BMXXBC050K**	0.650/ *1.433*
		12/ *39.37*	16	**BMXXBC120K**	1.440/ *3.175*
	Straight	1/ *3.28*	16	**TSXCBY010K**	0.160/ *0.353*
		3/ *9.84*	16	**TSXCBY030K**	0.260/ *0.573*
		5/ *16.40*	16	**TSXCBY050K**	0.360/ *0.794*
		12/ *39.37*	16	**TSXCBY120K**	1.260/ *2.778*
		18/ *59.05*	16	**TSXCBY180K**	1.860/ *4.101*
		28/ *91.86*	16	**TSXCBY280K**	2.860/ *6.305*

Description	Use	Length m/*ft*	Item *(2)*	Reference	Weight kg/*lb*
Cable on reel Cable with free ends, 2 line testers	To be fitted with 2 TSXCBYK9 connectors	100/ *328.08*	–	**TSXCBY1000**	12.320/ *27.161*

Description	Use	Sold in lots of	Item *(2)*	Reference	Weight kg/lb
Line terminator 2 x 9-way SUB-D connectors marked A/ and /B	Required on the 2 BMXXBP ●●●0 modules located at either end of the daisy chain	2	17	**TSXTLYEX**	0.050/ *0.110*
Bus X straight connectors 2 x 9-way SUB-D connectors	For TSXCBY1000 cable ends	2	–	**TSXCBYK9**	0.080/ *0.176*
Connector installation kit 2 crimping pliers, 1 pen *(3)*	Fitting TSXCBYK9 connectors	–	–	**TSXCBYACC10**	–

(1) For additional characteristics, see our website www.schneider-electric.com.
*(2) For items **1** to**10**, see page 2/22 ; **11** to **14**, see page 2/23.*
(3) Installation of connectors on the cable also requires a wire stripper, a pair of scissors and a digital ohmmeter.

Modicon Quantum automation platform

Quantum Ethernet I/O

Requirements

Requirements for a Quantum Ethernet I/O architecture *(1)*

The table below gives the minimum hardware and software requirements for setting up a Quantum Ethernet I/O architecture.

Description of the hardware or software required	Reference	Version	Item *(2)*
Unity Pro Extra Large software	**UNISPUEF•CD70**	⩾7.0	**–**
Ethernet head adaptor	**140CRP31200**	–	**1**
Quantum RIO drop adaptor	**140CRA31200**	–	**2**
Quantuam Ethernet drop optical repeaters	**140NRP31200**	–	**4**
	140NRP31201	–	**4**
Modicon X80 RIO drop adaptor	**BMXCRA31200**	–	**3**
	BMXCRA31210	–	**3**
Modicon X80 NRP RIO drop optical repeaters	**BMXNRP0200**	–	**4**
	BMXNRP0201	–	**4**
Quantum Ethernet DIO head adaptor module	**140NOC78000**	–	**5**
Quantum Ethernet control network head adaptor	**140NOC78100**	–	**6**
Ethernet communication modules	**140NOE77101**	Firmware ⩾4.9	–
	140NOE77111	Firmware ⩾5.0	–
ConneXium managed switches	**TCSESM083F23F1**	Firmware ⩾6.0	**8, 9**
	TCSESM063F2CU1	Firmware ⩾6.0	**8, 9**
	TCSESM063F2CS1	Firmware ⩾6.0	**8, 9**
Quantum standard CPUs	**140CPU65150**	Firmware ⩾3.1	**10**
	140CPU65160	Firmware ⩾3.1	**10**
	140CPU65260	Firmware ⩾3.1	**10**
	140CPU65860	Firmware ⩾3.1	**10**
Quantum Hot Standby CPUs	**140CPU67160**	Firmware ⩾3.1	**11**
	140CPU67260	Firmware ⩾3.1	**11**
	140CPU67261	Firmware ⩾3.1	**11**
	140CPU67861	Firmware ⩾3.1	**11**

(1) For additional characteristics, see our website www.schneider-electric.com.
*(2) For items **1** to **10**, see page 2/22; **11** to **14**, see page 2/23; **15** to **17**, see page 2/24.*

Modicon Quantum automation platform

I/O architectures

Remote I/O (RIO)

S908 bus

Presentation

For applications that require remotely mounted I/O drops, a higher I/O capacity and/or connectivity to existing Modicon I/O installations, Quantum provides a remote I/O (RIO) architecture solution.

Based on the S908 RIO network technology, this network is compatible with existing Modicon I/O installations, including those with 800 and 200 series I/O modules and Sy/Max I/O. Retrofit installations can therefore incorporate an installed I/O base to reduce installation costs.

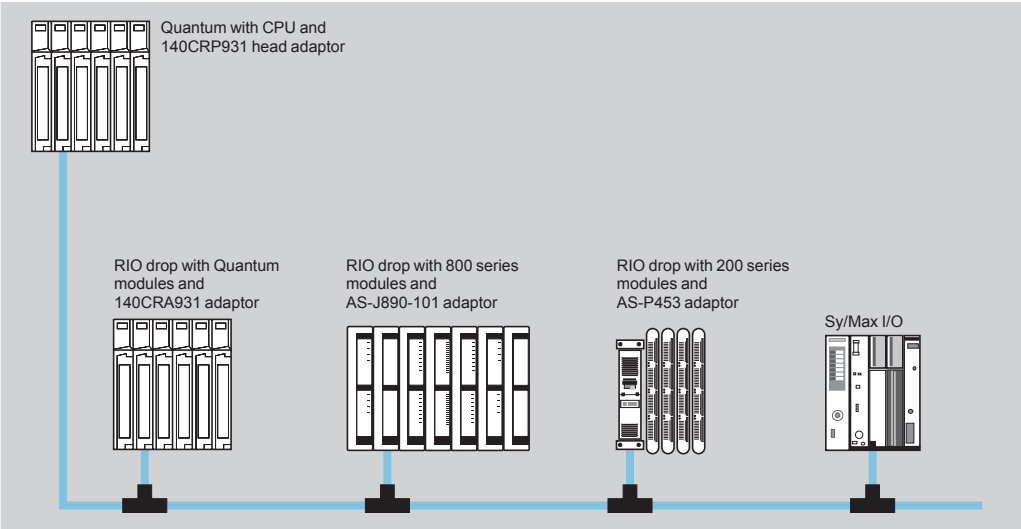

The RIO architecture uses coaxial cabling and provides long distance capability up to 4572 m with a CATV cable, or longer with an optional optical fibre cable. It is a high-performance network, operating at 1.544 Mbps, providing a high I/O data throughput.

The RIO cabling system consists of a linear trunk cable, with line taps and drop cables for connection to each remote drop.
Up to 31 remote drops can be configured. Each drop can support up to 128 I/O words (64 input words/64 output words).

Segment scheduler mechanism

The segment scheduler mechanism increases the performance of the RIO network by interleaving I/O scanning and program execution.

The segment scheduler breaks the application program into logical segments, then co-ordinates the scanning of the inputs and the updating of the outputs in conjunction with the execution of the program associated with the segment. The inputs are read before the program is processed and the outputs are written after the program is processed. This avoids having to wait for an entire scan before the outputs are set, thus giving a faster system response time. This means that an RIO architecture does not reduce system performance.

For most systems, throughput of local or remote I/O can be estimated at no less than two times scan (with 24 V ⎓ I/O modules). Analog values and words are updated automatically, as fast as discrete I/O, with no user programming.

Compatibility with 800 and 200 series I/O products

Quantum is compatible with 800 and 200 series I/O, which are earlier generation products *(1)*. Using the same RIO head adaptor, 800 series I/O are connected via J890, J892, P890 or P892 RIO adaptors and 200 series I/O are connected via P453/J290 and P451/J291 RIO adaptors.

Other standard components are also compatible with this system, including **MA0185100** network T-connectors and **MA0186100** splitter boxes. The Quantum remote I/O system also takes Sy/Max I/O drops.

Configuration rules

To ensure a valid configuration, add together the consumptions (in mA) of the modules in the rack, for each drop, and check that the total is less than the power available with the selected power supply.

(1) For the entry-level HSBY CPU model, 140CPU67060 is not compatible with the S908 RIO bus.

Overview:
page 2/6

Topologies:
page 2/27

References:
page 2/31

Modicon Quantum automation platform

I/O architectures

Remote I/O (RIO)

S908 bus

Topologies

Single-cable topology

Line length 4.572 km max.

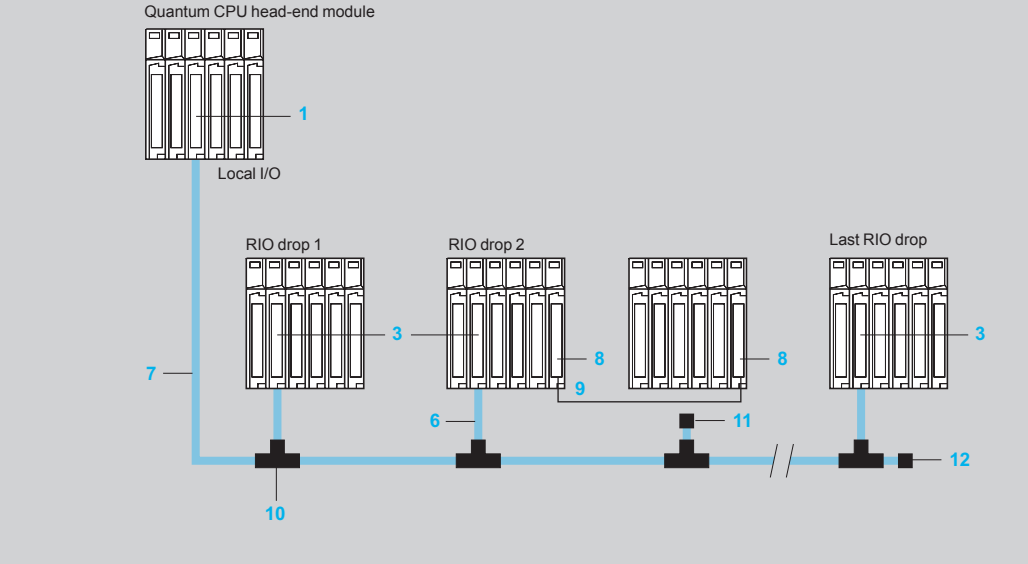

1 **140CRP93100** RIO head adaptor
2 **140CRP93200** RIO head adaptor (redundant)
3 **140CRA93100** RIO drop adaptor
4 **140CRA93200** RIO drop adaptor (redundant)
5 **140NRP95400** or **140NRP95401C** RIO drop optical fibre repeater
6 RG-6 coaxial cable (drop)
7 RG-11 coaxial cable (trunk)
8 **140XBE10000** rack expansion module
9 **140XCA7170●** cable for expansion module
10 **MA0185100** T-connector 2 x RG-11/1 x RG-6
11 **520402000** RG-6 terminator for T-connector
12 **520422000** RG-11 trunk cable terminator for T-connector

A **MA0185100** T-connector 10 is required for each I/O drop on the system to electrically isolate the drop from the trunk cable and to protect the system from impedance mismatches and cable disconnections. A minimum signal strength of 14 dB is required between the trunk cable and each I/O drop to ensure correct operation. The signal loss on the trunk cable is less than 1 dB as it crosses a T-connector. A total of 35 dB is available from the head-end RIO CPU. The whole cabling architecture must not exceed this system limit.

For systems that require high availability, a solution with redundant cable is available, to provide protection against cable breaks and damaged connectors. With two cables connected between the host and each drop, the first cable break does not disrupt communication. If a cable break occurs, a status bit is set to 1 to indicate the problem drop or the faulty cable. For preventive maintenance, the system also provides counter values for all communication transactions to all drops. High counter values on a cable in a specific drop could indicate connection problems. This will enable corrective work to be scheduled before there is unwanted downtime.

RIO topology with redundant cable

Line length 4.572 km max.

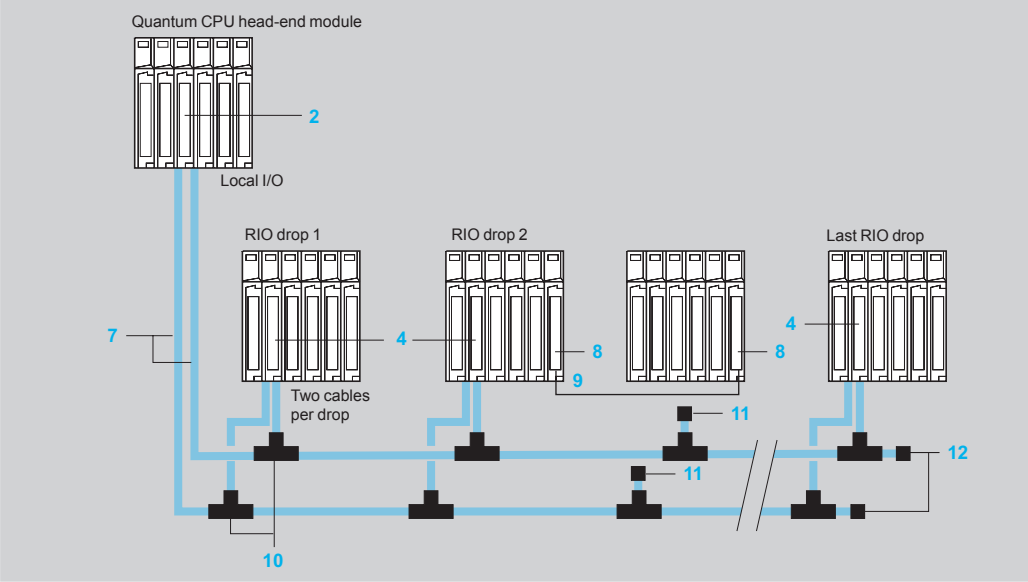

Modicon Quantum automation platform

I/O architectures

Remote I/O (RIO)

S908 bus

Topologies (continued)

Point-to-point RIO communication with optical fibre repeaters

140NRP95400 optical fibre repeaters 5 or **140NRP95401C** enhance network noise immunity and allow significantly increased cable lengths.

These repeaters enable a standard 62.5/125 µm or 9/125 µm single mode optical fibre cable to be used instead of an RG-6/RG-11 coaxial cable, while maintaining the dynamic range of the network.

Up to 12 repeaters can be daisy-chained, creating bus architectures over fifteen or so kilometres or redundant ring architectures over a perimeter of fifteen or so kilometres.

As these optical fibre repeaters are in Quantum module format, they can be used as *standalone* devices with a single power supply in a 3-slot rack (for example replacing **140NRP95400** or **140NRP95401C** repeaters, with which they are fully compatible) or directly incorporated in the Quantum racks, which provides a more compact configuration and enables the redundant power supplies of the Quantum PLC to be used.

Optical fibre repeaters used as *standalone devices*

Line length 16 km max.

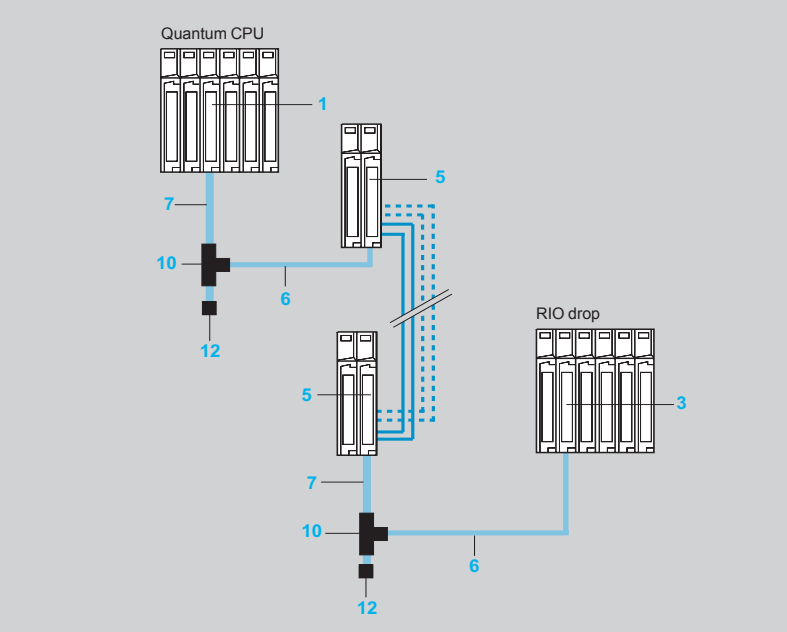

1 **140CRP93100** RIO head adaptor
2 **140CRP93200** RIO head adaptor (redundant)
3 **140CRA93100** RIO drop adaptor
4 **140CRA93200** RIO drop adaptor (redundant)
5 **140NRP95400** or **140NRP95401C** RIO drop optical fibre repeater
6 RG-6 coaxial cable (drop) *(1)*
7 RG-11 coaxial cable (trunk) *(1)*
8 **140XBE10000** rack expansion module
9 **140XCA7170●** cable for expansion module
10 **MA0185100** T-connector 2 x RG-11/1 x RG-6 *(1)*
11 **520402000** RG-6 terminator for T-connector
12 **520422000** RG-11 trunk cable terminator for T-connector *(1)*

(1) The connection between the CRP/CRA and NRP modules in the same rack, with 2 coaxial cables 7 and 6, the T-connector 10 and the T-connector terminator 12, can be replaced by a connection with a single RG-6 coaxial cable 6, if the distance between the modules is less than 30 cm.

Optical fibre repeaters incorporated in the Quantum racks

Line length 16 km max.

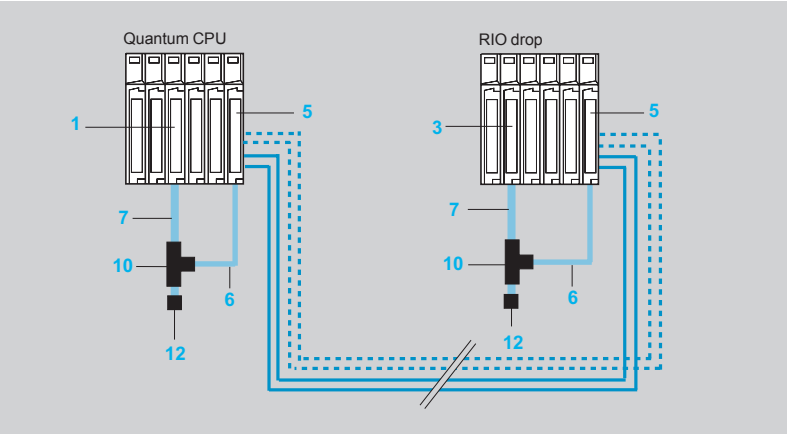

Modicon Quantum automation platform

I/O architectures

Remote I/O (RIO)

S908 bus

Topologies (continued)

"Self-healing" ring topology with optical fibre repeaters

Several **140NRP95400** or **140NRP95401C** optical fibre repeaters can be interconnected to form a ring, so that if a break occurs anywhere on the ring, the network can reconfigure itself.

The RIO signal is sent by the drop repeater to the head repeaters, in both legs of the ring. When a signal is received on one Rx line, the other Rx channel is blanked, which prevents the same signal being transmitted twice on the ring.

Line length 16 km max.

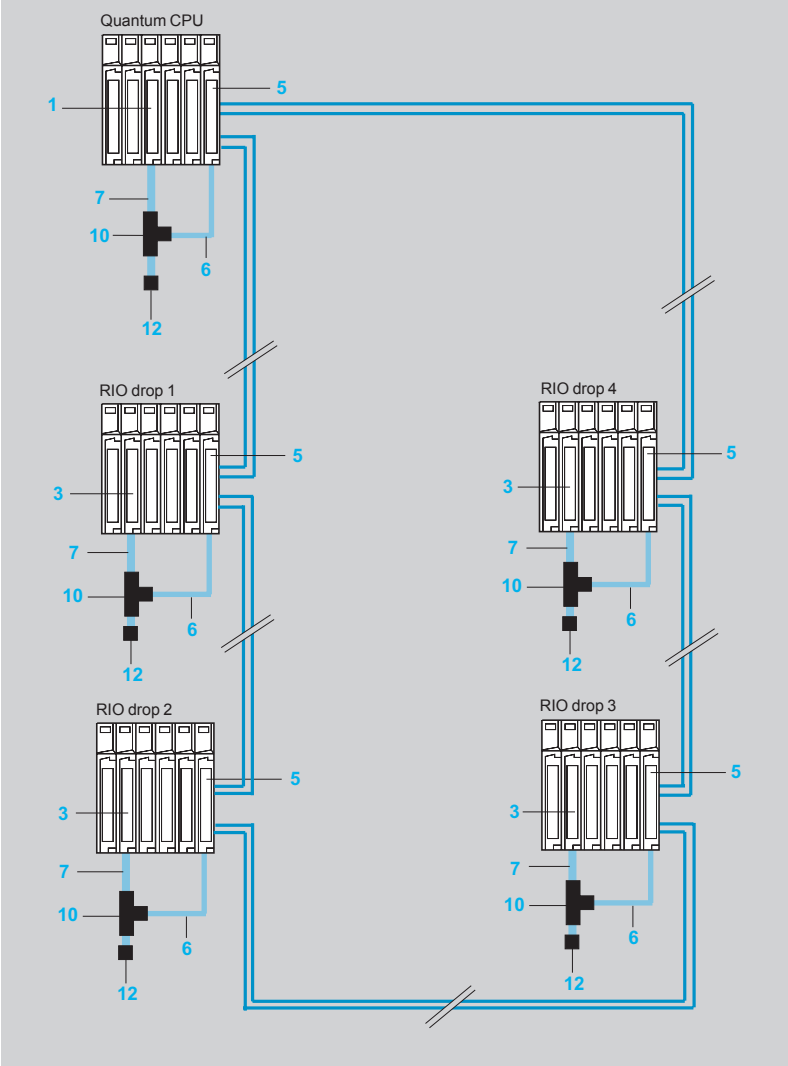

1 **140CRP93100** RIO head adaptor
2 **140CRP93200** RIO head adaptor (redundant)
3 **140CRA93100** RIO drop adaptor
4 **140CRA93200** RIO drop adaptor (redundant)
5 **140NRP95400**
or **140NRP95401C** RIO drop optical fibre repeater
6 RG-6 coaxial cable (drop) *(1)*
7 RG-11 coaxial cable (trunk) *(1)*
8 **140XBE10000** rack expansion module
9 **140XCA7170●** cable for expansion module
10 **MA0185100** T-connector 2 x RG-11/1 x RG-6 (*1*)
11 **520402000** RG-6 terminator for T-connector
12 **520422000** RG-11 trunk cable terminator for T-connector (*1*)

(1) The connection between the CRP/CRA and NRP modules in the same rack, with 2 coaxial cables 7 and 6, the T-connector 10 and the T-connector terminator 12, can be replaced by a connection with a single RG-6 coaxial cable 6, if the distance between the modules is less than 30 cm.

Note on optical fibre cables

To use a optical fibre link on a RIO network, the following points must be taken into consideration when selecting the optical fibre cable from a supplier:

■ For most applications, 62.5/125 µm fibre is recommended because of its relatively low loss and signal distortion. However, for high optical power applications, such as those using splitter boxes or star couplers, 100/140 µm fibre should be used.

■ Whenever possible, select a multiconductor cable. For a small additional cost this provides a backup solution in case a fibre breaks during installation.

Modicon Quantum automation platform

I/O architectures

Remote I/O (RIO)

S908 bus

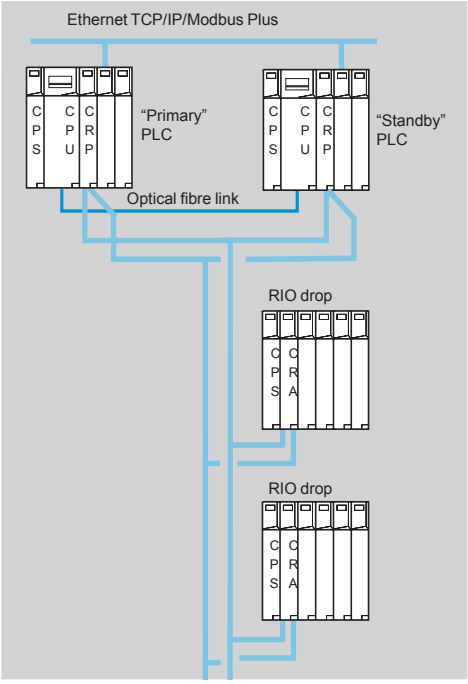

Hot Standby system and RIO drops

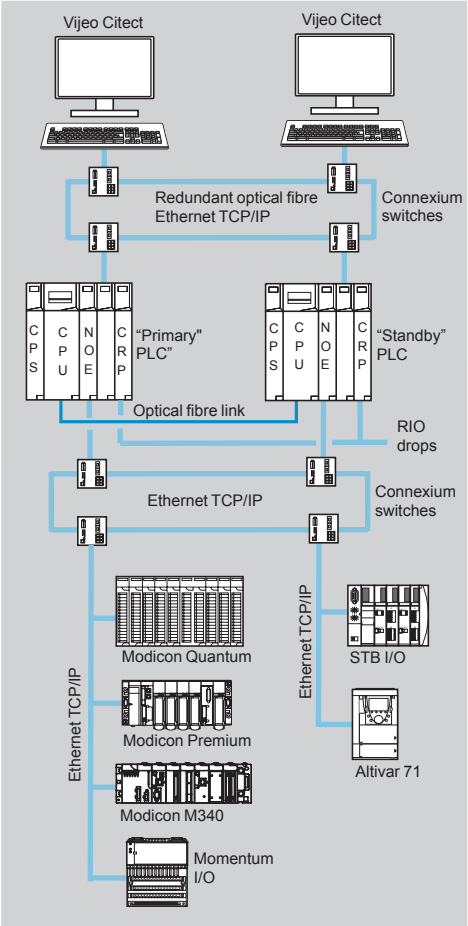

Mixed Hot Standby system, Ethernet network and RIO drops

Hot Standby system with Unity Pro software

The Unity Hot Standby system is used for the the most demanding applications, in terms of the availability of their control/command system, as no interruption of the process can be tolerated.

This system consists of two PLC racks (Primary and Standby) with identical hardware configurations, based on **140CPU67●6●** Unity Hot Standby CPUs, linked via a high-speed optical fibre cable (100 Mbps).

The "Primary" PLC executes the application program and controls the I/O, while the "Standby" PLC remains in the background.

If a fault occurs on the "Primary" PLC, the Standby system automatically switches execution of the application program and control of the I/O to the "Standby"PLC. The changeover is performed smoothly at the outputs and is transparent for the process.

The Hot Standby system with Unity Pro software increases productivity by minimizing process downtime.

Hot Standby system based on remote I/O (RIO) architecture

The Hot Standby system based on the remote I/O (RIO) architecture is used for sensitive processes which require an I/O control takeover time within the region of the PLC scan time.

As the RIO drops are synchronized with the PLC's CPU scan time, the CPU changeover is carried out smoothly at the outputs, *i.e. bumpless*. See page 2/39.

Ethernet Hot Standby system

The Ethernet Hot Standby system is used for processes for which the I/O control time is compatible with Ethernet technology.

It is possible to adopt a mixed architecture, combining both RIO distribution on at least one drop and distribution of devices on an Ethernet TCP/IP network.

From an operational point of view, client type devices (PLC modules, Human-Machine interfaces, etc.) and Modbus TCP server type devices (Modicon OTB or Momentum distributed I/O, Modicon STB I/O islands, Altivar variable speed drives, etc.) can in fact coexist on a single Ethernet TCP/IP network.

As far as Ethernet network topology elements for connection between PLC modules and distributed devices are concerned, it is better to use switches rather than hubs. The topology adopted can be bus or ring type (copper wire or optical fibre), as appropriate

With 140CPU6●2●● CPUs, it is also possible to implement the S908 bus and Quantum Ethernet I/O architectures.

Hot Standby system based on Profibus DP fieldbus modules

This Hot Standby system is based on the use of two **PTQ-PDPMV1** communication modules from ProSoft Technology which are used to control the I/O on the Profibus DP fieldbus. See page 2/42.

Modicon Quantum automation platform

I/O architectures
Remote I/O (RIO)
S908 bus

Adaptor modules

Description	Cable	Safety	Bus current required	Power dissipation	Item (4)	Reference	Weight kg/lb
Quantum RIO head adaptor (max. 1) *(1)*	Single coaxial	–	600 mA	3 W	1	**140CRP93100**	–
	Redundant coaxial	Non-interfering	750 mA	3.8 W	2	**140CRP93200**	–
Quantum RIO drop adaptor (max. 31) *(1)*	Single coaxial	–	600 mA	3 W	3	**140CRA93100**	–
	Redundant coaxial	Non-interfering	750 mA	3.8 W	4	**140CRA93200**	–
RIO drop optical fibre repeater *(2)*	Multimode optical fibre	Non-interfering	500 mA	2.5 W	5	**140NRP95400**	–
	Single mode optical fibre	Non-interfering	750 mA	5 W	5	**140NRP95401C**	–

Connection cables

Description	Use/ length	Item (4)	Reference	Weight kg/lb
RG 6 quad shield coaxial cable	Drop cable, 320 m/*1047.87 ft* per reel	6	**975750000**	–
RG 11 quad shield coaxial cable	Trunk cable 320 m/*1049.87 ft* per reel	7	**975951000**	–
Pre-assembled drop cable (supplied with F connectors, line termination impedance and quad shield RG 6 cable)	15 m/ *49.21 ft*	–	**ASMBII003**	–
	42 m/ *137.79 ft*	–	**ASMBII004**	–

Rack accessories *(3)*

Description	Length	Item (4)	Reference	Weight kg/lb
Rack expansion module	–	8	**140XBE10000**	–
Cables for rack expansion module	1 m/ *3.28 ft*	9	**140XCA71703**	–
	2 m/ *6.56 ft*	9	**140XCA71706**	–
	3 m/ *9.84 ft*	9	**140XCA71709**	–

(1) Approvals: UL 508, CSA 22.2-142, cUL, FM Class 1 Div. 2, CE.
(2) Module can be declared and configured in Unity Pro Small/Medium/Large/Extra Large version ≥ 6.0.
(3) For racks with 3 to 16 slots, see page 1/17.
(4) For item numbers, see pages 2/27 to 2/29.

Modicon Quantum automation platform

I/O architectures

Remote I/O (RIO)

S908 bus

Connection accessories

Description		Sold lots of	Item	Reference	Weight kg/*lb*
T-connector (connects the RG-6 drop cable to the RG-11 trunk cable)		1	10	**MA0185100**	–
Splitter box for coaxial cable for redundant topology *(1)*		–	11	**MA0186100**	–
RG-6 terminator for T-connector (for unused drop slot)		1	12	**520402000**	–
Trunk cable terminator (on last T-connector on the network)		1	13	**520422000**	–
F connector cassette	For RG-6 cable	10	–	**MA0329001**	–
	For RG-11 cable	6	–	**490RIO00211**	–
Right angle F adaptor, for semi-rigid cable		1	–	**520480000**	–
BNC connector for RG-6 cable		1	–	**43509446**	–
F (female)/BNC (male) converter for RG-11 cable		1	–	**520614000**	–
BNC line terminator		1	–	**600513000**	–
Earthing block		1	–	**600545000**	–

(1) T-connector for joining RG-6 coaxial cables coming from two 140CRP93●00 head-end adaptors. *Forms the start of the RIO links.*

Cabling accessories

Description		Sold in lots of	Unit reference	Weight kg/*lb*
Stripping tool	For RG-6 cable	1	**490RIO00400**	–
	For RG-11 cable	1	**490RIO0S411**	–
Replacement blades	For RG-6 cable	2	**490RIO00406**	–
	For RG-11 cable	2	**490RIO00411**	–
Crimping tools	F connector on RG-6	1	**600544000**	–
	F connector on RG-11	1	**490RIO0C411**	–
Cable cutter	–	1	**600558000**	–

Modicon Quantum automation platform

Hot Standby system

Unity Pro

Presentation

The Hot Standby system is compatible with Unity Pro software, and provides Quantum CPUs with the high level of availability required by the most critical process applications, in terms of availability of their control system.

At the centre of the system are two Quantum PLC racks, commonly known as the “Primary” PLC and the “Standby” PLC. Their hardware configurations must be identical (same modules in each local rack). The key element, on each of them, is the **140CPU67●●●** CPU, which is specially designed for Hot Standby architectures with Unity Pro software.
These Hot Standby CPUs are double-slot modules, which combine the central processor unit function with that of the redundant coprocessor in the same housing.

The “Primary” PLC executes the application program and controls the I/O. The “Standby” PLC stays in the background, ready to take over if necessary.
The “Standby” PLC is connected to the “Primary” PLC via a high speed optical fibre link (100 Mbps) integrated in the CPU:
■ For **140CPU67060, 140CPU67160** or **140CPU67260** CPUs, a 62.5/125 µm, multimode optical fibre link is used, with a maximum distance between CPUs of 4 km (depending on the CPU product version. See our website www.schneider-electric.com)
■ For **140CPU67261** and **140CPU67861** CPUs, an ITU-T G.652, single mode optical fibre link, known as being the SMF standard (1310 nm) is used, with a maximum distance between CPUs of 16 km

It is via this optical fibre link that the user application data is updated cyclically on the “Standby” PLC.

In a Quantum Hot Standby architecture, it is possible to update the CPU firmware without stopping the process.

In the event of an unexpected failure affecting the “Primary” PLC, the standby system switches over automatically, changing over execution of the application program and control of the I/O to the “Standby” PLC, with an up-to-date data context. Once the changeover is complete, the “Standby” PLC becomes the “Primary” PLC. Once the faulty PLC has been repaired and reconnected to the standby system, it takes the role of the “Standby” PLC.

Using the Hot Standby system with Unity Pro software means there is a smooth changeover from primary to standby at the outputs. The changeover is transparent for the process, which will continue to be managed without any permanent ill-effects from the occurrence of a hardware failure. The Hot Standby system with Unity Pro software therefore increases productivity by minimizing downtime.

Modicon Quantum automation platform

Hot Standby system

Unity Pro

Function

■ **Application program memory space**

All the memory space reserved for the application program is managed by the Hot Standby system with Unity Pro.

The five CPUs dedicated to Hot Standby applications (**140CPU67060**, **140CPU67160**, **140CPU67260**, **140CPU67261** and **140CPU67861**) have an embedded RAM memory (512 KB, 1024 KB, 3072 KB and 11,264 KB respectively). Except for **140CPU67861**, the RAM memory in these CPUs can be increased to 7.168 MB by adding a PCMCIA memory card (see page 1/15).

■ **Configuration**

The installation of the application program does not differ fundamentally from installing a single PLC program. It essentially uses the information provided by a dedicated dialogue box, filled in during the configuration of the system.

■ **Mini-terminal on front panel**

The **140CPU67060, 140CPU67160, 140CPU67260, 140CPU67261** and **140CPU67861** CPUs are double-slot modules, with a mini-terminal at the top of the front panel. Equipped with an LCD screen and navigation buttons, it has a special sub-menu for the standby system. It can be used for example to check the status of the PLC, or to force the PLC to active or inactive standby state.

■ **System registers**

Control of the standby system is managed by an internal register called the Command Register, carried by a system word. This Command Register accepts user requests, expressed via the configuration dialogue box and/or via the mini-terminal on the front panel. This Command Register can be used in particular to disable acknowledgement of commands made from the mini-terminal.

Feedback on the status of the standby system is given by a Status Register, which is also carried by a system word.

■ **Function blocks**

Standard function blocks are provided in the Unity Pro programming environment, making it possible to read/write to the Command Register and read the Status Register, by individually identifying each of the bits carrying a particular function.

■ **Cyclic transfer of the application context**

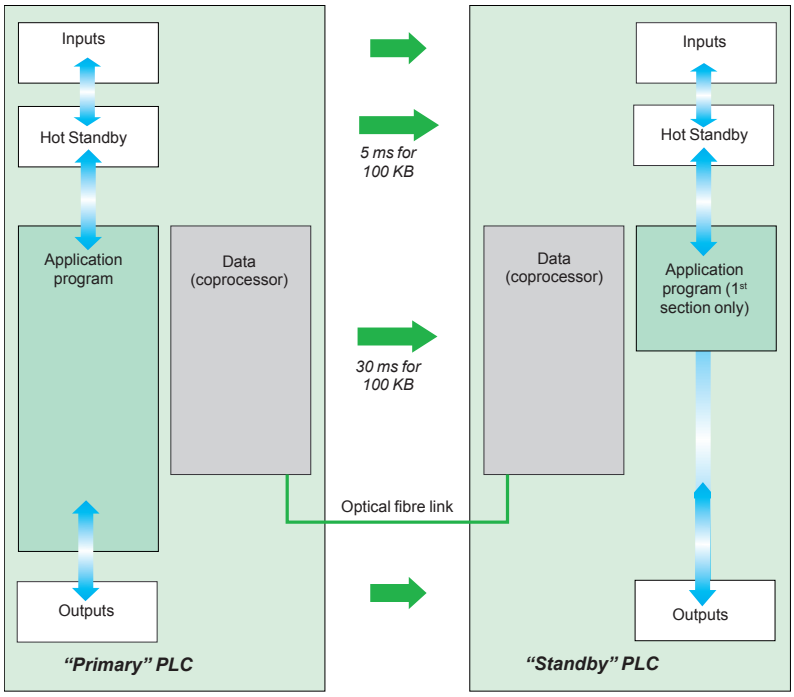

At the start of each scan cycle, the content of the data memory in the "Primary" PLC is transferred to the "Standby" PLC via the optical fibre link, at the same time as the contents of the I/O state tables are transferred to it. The Hot Standby system is thus able to transfer all the 128 KB made available to receive the located variables (RAM State) from the "Primary" PLC to the "Standby" PLC. As far as unlocated application variables are concerned, and also application data such as DFB instance data, for example, up to 512 KB can be transferred.

2

Functions (continued)

■ **Monitoring program discrepancies**
The majority of redundant PLC applications require identical application programs on both CPUs. To this end, a comparison is made of the application program in both PLCs. This is carried out immediately on power-up, and is repeated constantly while the standby system remains active.

By default, the “Standby” PLC will disconnect itself from the standby system as soon as a difference in program is detected. In order to maximize availability of the control system, including during interventions on the application program, it is possible, via the configurator dialogue box or via the Command Register, to authorize the continued activity of the standby system with applications whose program code and/or database are different.

■ **Ensuring parity of the content of the PLC memories**
When the second PLC is powered up, the content of the PLC memory is automatically made identical to that of the first PLC (Plug and Play) in a certain number of cases. This is in particular true when this second PLC is empty. At the end of the transfer, the standby system is active, the first PLC then takes the “Primary” role and the second the “Standby” role.
The user can also request an upgrade via the mini dialogue terminal, which can be accessed from the front panel of the “Primary” PLC, especially after a modification has been made to the application. This operation on the mini-terminal can be performed by a maintenance engineer, without needing to use a programming terminal. This function is also available via a Command Register bit.

■ **Upgrading the operating systems**
A Command Register bit, set if necessary from the configuration dialogue box of the Hot Standby system, is used for sequential upgrading of the operating systems of both PLCs, while maintaining control of the process by the application program.

■ **Automatic exchange of communication port addresses**
When the standby system changes over, the respective addresses of the equivalent communication ports on the “Primary” and “Standby” PLCs are exchanged automatically. This exchange of addresses is unconditional for Ethernet and Modbus Plus ports. It is conditional for the local Modbus port on **140CPU67060, 140CPU67160, 140CPU67260, 140CPU67261** and **140CPU67861** CPUs.
This function for the automatic exchange of communication port addresses greatly simplifies the task of the developer on supervisory control systems (HMI, SCADA, etc.). In effect, a given address thus characterizes an “operational” PLC (“Primary” or “Standby”) and not a physical PLC.

■ **Automatic exchange mechanisms during communication**
Irrespective of the I/O architectures used (RIO or mixed I/O), the Hot Standby system automatically manages the exchange mechanisms between the I/O and the PLC performing the “Primary” function.

Modicon Quantum automation platform

Hot Standby system

Unity Pro

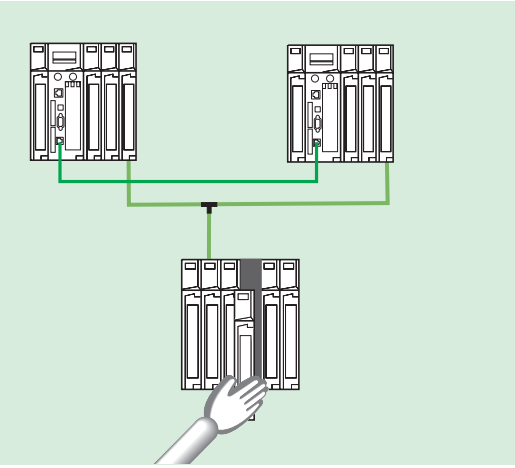

CCOTF function: exchanging I/O modules with the application in RUN mode

Functions (continued)

Online modification of the configuration (CCOTF)

This function, which is also called *CCOTF (Change Configuration On The Fly),* is used to add or remove discrete or analog I/O modules to/from a Quantum CPU configuration in RUN mode.
It also enables Ethernet RIO drops to be added in RUN mode.
The addition of a complete Ethernet RIO drop in RUN mode requires Unity Pro ≥ V7.0 on the following CPUs:
- 140CPU65260
- 140CPU65860
- 140CPU67260
- 140CPU67261
- 140CPU67861

It also enables the configuration parameters of pre-existing and new I/O modules to be modified online.
The *CCOTF* function thus avoids interrupting processes and helps to reduce production costs.

The *CCOTF* function is supported by Standalone CPUs from version 5 or later of Unity Pro, and for Hot Standby CPUs from version 4.1 or later of Unity Pro.

The following tables list the CPUs which support the *CCOTF* function and the I/O modules for which this function is permitted:

Standalone CPUs	Hot Standby CPUs
140CPU31110	140CPU67060
140CPU43412A *(1)*	140CPU67160
140CPU53414B *(1)*	140CPU67260 *(2)*
140CPU43412U	140CPU67261 *(2)*
140CPU65150	140CPU67861 (2)
140CPU65160	
140CPU65260 *(2)*	
140CPU65860 (2)	

Analog I/O modules	Discrete I/O modules		
140ACI03000	140DDI15310	140DAI55300	140DAO84210
140ACI04000	140DDI35300	140DAI74000	140DAO84220
140ACO02000	140DDI35310	140DAI75300	140DAO85300
140ACO13000	140DDI36400	140DSI35300	140DRA84000
140AII33000	140DDI67300	140DDO15310	140DRC83000
140AII33010	140DDI84100	140DDO35300	140DVO85300
140AIO33000	140DDI85300	140DDO35301	140DDM39000
140AMM09000	140DAI34000	140DDO35310	140DDM69000
140ARI03010	140DAI35300	140DDO36400	140DAM59000
140ATI03000	140DAI45300	140DDO84300	140DII33000
140AVI03000	140DAI54000	140DDO88500	140DIO33000
140AVO02000	140DAI54300	140DAO84000	
		140DAO84010	

(1) CPUs updated with the Unity Pro firmware.
(2) The addition of a complete Ethernet RIO drop function is available for these CPUs with Unity Pro ≥ V7.0.

Modicon Quantum automation platform

Hot Standby system

Unity Pro

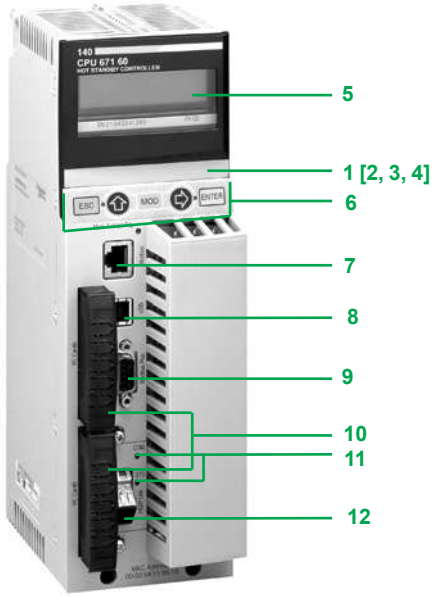

140CPU67160

Mini operator dialogue terminal

Hot Standby CPUs

The front panel of **140CPU67060, 140CPU67160, 140CPU67260, 140CPU67261** and **140CPU67861** Hot Standby CPUs comprises:

1 An LCD display cover, providing access to:
2 A key switch:
- □ Unlocked: All system operations can be invoked and all changeable module parameters can be modified via the LCD and keypad. The memory is not write-protected.
- □ Locked: No system operations can be invoked and all changeable module parameters are read-only. The memory is write-protected.
  This state increases data security.

3 One backup battery slot
4 A reset button (Restart)
5 An LCD display (2 lines of 16 characters) with brightness and contrast controls.
6 A 5-button keypad with 2 LEDs *(ESC, ENTER, MOD, ⇧, ⇨)*
7 An RJ45 connector for connecting to the Modbus bus
8 A type B female USB connector for connecting the programming PC terminal
9 A 9-way female SUB-D connector for connecting to the Modbus Plus network
10 Two slots for PCMCIA memory expansion cards *(1)*
11 Two LEDs:
- □ COM LED (green): activity on the Hot Standby primary or secondary drop
- □ ERR LED (red): communication error between the Hot Standby primary and secondary drops

12 A optical fibre connector for interconnecting the primary and secondary PLCs in the Hot Standby architecture:
- □ An MT-RJ multimode optical fibre connector for the **140CPU67060**, **140CPU67160** and **140CPU67260**
- □ An LC single mode optical fibre connector for the **140CPU67261** and **140CPU67861**

Mini operator dialogue terminal

The mini operator dialogue terminal, located on the front of the **140CPU67060, 140CPU67160, 140CPU67260, 140CPU67261** and **140CPU67861** Hot Standby CPUs, gives the user direct information (RUN, STOP, No Conf) on the PLC status, without a programming terminal.
It can also be used to display, and if necessary to modify, a certain number of operating parameters, using the 5 navigation buttons: ESC, ENTER, MOD, ⇧ and ⇨.

Four main command functions are accessible from a menu/sub-menu tree structure:
- Quantum PLC operating mode: **PLC Operations**
- Communication port parameter settings: **Communications**
- System information: **System Info**
- LCD screen settings: **LCD Settings**

The **PLC Operations** menu is used to execute the following commands:
- Start PLC
- Stop PLC
- Init PLC

It can also be used to go into the **Hot Standby** sub-menu offering commands specific to the standby system.

It is possible to display (**State** sub-menu) the active/inactive state (with regard to standby) of the PLC which the user is working on, and this sub-menu also offers the option of forcing (**Mode** sub-menu) this PLC to active/inactive state.

The other sub-menus are:
- **Order:** delivers topological information on the current PLC
- **Diag:** gives, if necessary, error information on the state of the standby system
- **Transfer:** is used to transfer the content of the “Primary” PLC memory to that of the “Standby” PLC, for updating

(1) Except for 140CPU67861, which is already equipped with the large RAM memory size up to 11 MB, only the lower slot is available for PCMCIA memory expansion cards.

Modicon Quantum automation platform

Hot Standby system

Unity Pro

Architecture

Time-critical processes: remote I/O architecture (RIO)

For sensitive processes, requiring an I/O control takeover time within the region of the PLC scan time, an I/O architecture based on RIO (Remote I/O) native topology should be chosen by default.

The scanning of RIO drops is synchronous with the CPU scan time. As a result, the RIO architecture provides a smooth CPU changeover with regard to the outputs, i.e. bumpless.

RIO drops, consisting of Quantum modules, are recognized and configured from the Unity Pro software programming environment.

A **MA0186100** splitter box 5 is used to enable I/O exchanges between the RIO drops 4 and the "Primary" 1 and "Standby" 2 PLCs.
The **520411000** line impedances 6 are used to maintain a suitable line when it is necessary to disconnect one of the I/O CPUs. The optional **600545000** earthing terminals 7 are used to maintain the earthing of the coaxial cable in these conditions.

The availability of this I/O system can be reinforced by using a dual-medium I/O wiring system. It is possible to transpose these I/O drops on an optical ring (single or dual), using optical repeaters.

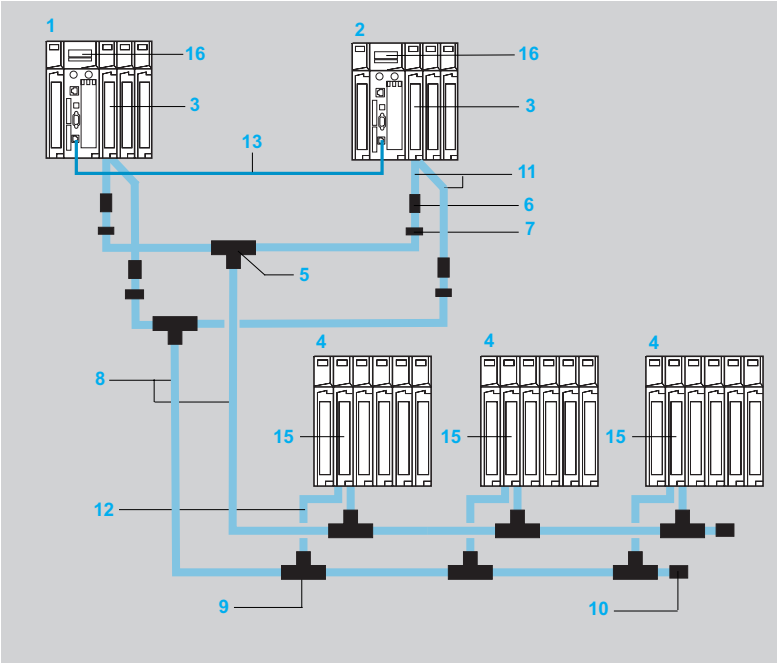

1 "Primary" Quantum PLC
2 "Standby" Quantum PLC
3 **140CRP93200** RIO head adaptor (redundant)
4 RIO drop
5 **MA0186100** splitter box for coaxial cable
6 **520411000** line impedance
7 **600545000** earthing terminal
8 RG-11 coaxial trunk cable
9 **MA0185100** T-connector 2 x RG-11/1 x RG-6
10 **520422000** RG-11 trunk cable terminator for T-connector
11 RG-6 coaxial cable (0.3 m/*0.98 ft*)
12 RG-6 drop coaxial cable (2.4 m/*7.87 ft*)
13 Optical fibre cable (3/5/15 m or *9.84/16.40/49.21 ft*)
14 **140NOE771●1** or **140NOC78●00** Ethernet network module, depending on type of architecture (not shown)
15 **140CRA93200** RIO drop adaptor (redundant)
16 **140CPU67●6●** Hot Standby CPU

***Note**: for items 1, 2, …15, see pages 2/41 to 2/42.*

The components are available in kits.
For example, the configuration illustrated above can be created using:
- 1 splitter kit **140CHS32000**
- 4 head adaptor connection kits **RPXKITCRP**
- 6 drop kits **RPXKIT6F**
- 1 RG-11 coaxial trunk cable: for example, a 320 m reel **975951000**

(see page 2/31)

Modicon Quantum automation platform

Hot Standby system

Unity Pro

140CPU67160

References

Hot Standby CPU with Unity Pro

Hot Standby CPU		Application memory capacity (max.)		Communication ports	Optical fibre	Reference	Weight kg/*lb*
Clock speed	Coprocessor	Internal RAM available (with located variables)	With PCMCIA card		Type and max. distance		
MHz		KB	KB				
266	Yes, integrated Ethernet TCP/IP, use reserved for Hot Standby	512	7168	1 Modbus *(1)* 1 Modbus Plus 1 USB 1 Hot Standby port (100 Mbps) *(2)*	Multimode, 2 km	**140CPU67060**	1.424/ *3.139*
	Yes, integrated Ethernet TCP/IP, use reserved for Hot Standby	1024	7168	1 Modbus *(1)* 1 Modbus Plus 1 USB 1 Hot Standby port (100 Mbps) *(2)*	Multimode, 2 km	**140CPU67160**	1.424/ *3.139*
	Yes, integrated Ethernet TCP/IP, use reserved for Hot Standby	3072	7168	1 Modbus *(1)* 1 Modbus Plus 1 USB 1 Hot Standby port (100 Mbps) *(2)*	Multimode, 2 km	**140CPU67260**	1.424/ *3.139*
	Yes, integrated Ethernet TCP/IP, use reserved for Hot Standby	3072	7168	1 Modbus *(1)* 1 Modbus Plus 1 USB 1 Hot Standby port (100 Mbps) *(3)*	Single mode, 16 km	**140CPU67261**	1.424/ *3.139*
	Yes, integrated Ethernet TCP/IP, use reserved for Hot Standby	11264	–	1 Modbus *(1)* 1 Modbus Plus 1 USB 1 Hot Standby port (100 Mbps) *(2)*	Single mode, 16 km	**140CPU67861**	1.424/ *3.139*

140NOE771●1

Description	Type of architecture	Topology	Characteristic	Item *(4)*	Safety	Reference	Weight kg/*lb*
RIO head adaptor modules	Remote I/O (RIO) and mixed I/O	Single cable	–	3	–	**140CRP93100**	–
		Redundant cable	–	3	Non-interfering	**140CRP93200**	–
		Redundant cable	–	3	Non-interfering	**140CRP31200**	–
Ethernet Modbus TCP/IP network modules *(5)*	Distributed I/O on Modbus TCP/IP	Bus or ring (copper or optic fibre)	Transparent Ready: Class B30	14	–	**140NOE77101**	0.345/ *0.761*
			Transparent Ready: Class C30	14	Non-interfering	**140NOE77111**	0.345/ *0.761*
Ethernet DIO head adaptor module Required if there are Ethernet DIO devices in the architecture *(5)*	Mixed distributed I/O	Bus or ring (copper or optic fibre)	–	15	–	**140NOC78000**	0.554/ *1.221*
Ethernet head-end adaptor module Required if there is a control network in the architecture	Mixed distributed I/O	Bus or ring (copper or optic fibre)	Integrated router	15	–	**140NOC78100**	0.554/ *1.221*

140NOC78000/78100

(1) RS 232/RS 485 Modbus port.
(2) Ethernet 100 Mbps port for multimode optical fibre.
(3) Ethernet 100 Mbps port for multimode optical fibre.
(4) For item numbers, see diagram on page 2/39.
(5) The 140NOE771 Ethernet Modbus TCP modules ●1 in installed bases can also manage Ethernet DIO devices in a Quantum Ethernet I/O system. These modules do however have performance restrictions which are not present in the 140NOC78000 module. In particular, only a 140NOE771●1 module can be part of the Quantum Ethernet I/O network; please consult our Customer Care Centre.

490NOR000●●

References (continued)

Optical fibre cables for Hot Standby architectures

Description	Use/composition	Length m/*ft*	Item *(2)*	Reference	Weight kg/*lb*
Optical fibre cables for interconnecting the Ethernet ports on the **140CPU67160** **140CPU67260** CPUs (“Primary” and “Standby”) *(1)*	62.5/125 µm multimode optical fibre cable, equipped with MT-RJ connectors	3/ *9.84*	13	**490NOR00003**	–
		5/ *16.40*	13	**490NOR00005**	–

Connection kits

Description	Composition and item no. *(2)*	Reference	Weight kg/*lb*
Connection kit for 140CRP93●00 head adaptor modules	Comprising: - 1 RG 6 coaxial cable 11 (length 0.3 m) equipped with type F female connectors - 1 600545000 earthing terminal 7	**RPXKITCRP**	–
RIO drop kit	Comprising: - 1 MA0185100 T-connector 9 for RG-11/RG-6 coaxial cables with 520422000 trunk cable terminator 10 - 2 RG-6 coaxial cables 12 (length 2.4 m) equipped with type F female connectors	**RPXKIT6F**	–

MA0186100

520411000

600545000

Description	Use/composition	Length	Item *(2)*	Reference	Weight kg/*lb*
Splitter box for coaxial cable	T-connector for joining sections of RG-6 coaxial cable coming from two 140CRP93200 head adaptor modules. Forms the start of the RIO links.	–	5	**MA0186100**	–
Line impedance for RG-6 coaxial cable	Crimp-type adaptor for RG-6 RIO coaxial cable. Used to maintain a suitable RIO line on disconnection of the cable coming from the head adaptor (140CRP93200). Connection at both ends on female connector.	–	6	**520411000**	–
Earthing terminal for RG-6/RG-11 coaxial cable	Earthing terminal for RIO coaxial cable. Used to maintain earthing of the RIO line on disconnection of the cable coming from the head adaptor (140CRP93200). Connection at both ends on female connector.	–	7	**600545000**	–

(1) Additional optical fibre cable choices (type, length, etc.) are available in the Schneider Electric Accessories range. For more information, please consult our website www.schneider-electric.com.
(2) For item numbers, see diagram on page 2/39.
(3) For other RG connection accessories, see pages 2/31 and 2/32.

Modicon Quantum automation platform

Hot Standby system

ProSoft Technology PTQ-PDPMV1 module

Presentation *(1)*

The **PTQ-PDPMV1** communication module from ProSoft Technology can be used to create Hot Standby architectures based on Modicon Quantum **140CPU67060, 140CPU67160, 140CPU67260, 140CPU67261** or **140CPU67861** CPUs with Unity Pro and I/O architectures on Profibus DP fieldbus.

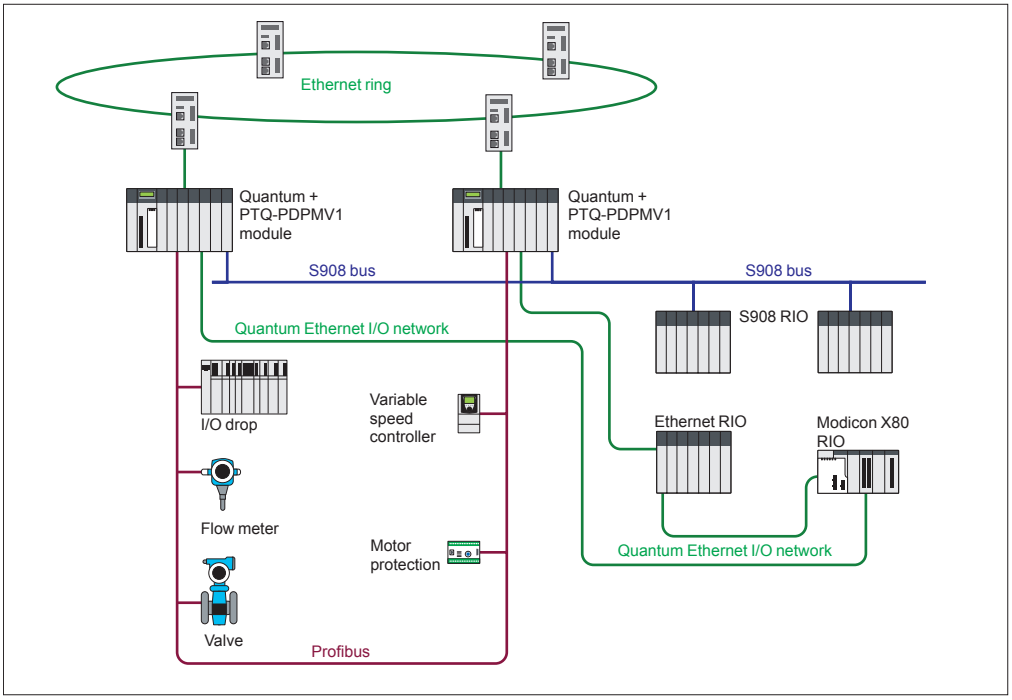

Profibus DP bus configuration

The Profibus DP bus is configured using the ProSoft Configuration Builder software, supplied with the module. This software is used to generate a file containing all the information relating to the connected devices. This extension file is transferred to the **PTQ-PDPMV1** module via the serial port.

Device configuration, adjustment and diagnostics

Integration of FDT/DTM technologies into the software makes it possible to configure, adjust and perform diagnostics on a device using the application-specific function provided by the manufacturer of the third-party device.

(1) Profibus DP from our partner ProSoft Technology (Collaborative Automation Partner Program).

Overview:
page 2/6

References (continued) *(1)*

The **PTQ-PDPMV1** module has three connectors on the front panel:
- Profibus DP master port: 9-way female SUB-D connector, RS485
- Ethernet port for configuration/communication: RJ45 connector
- Serial link for configuration: 9-way male SUB-D, RS232, PC-compatible

Operating principle of PTQ modules in a Hot Standby system

The **PTQ-PDPMV1** modules are connected to the primary and standby PLCs respectively.

Each **PTQ-PDPMV1** module monitors the Profibus DP bus and communicates the bus status to the other **PTQ-PDPMV1** module via the integrated Ethernet connection. At the same time, the PLC application is also informed via dedicated registers in the **PTQ-PDPMV1** modules.

It is the responsibility of the PLC application to manage this status data and also to initiate the changeover of CPU via the command registers if necessary.

Main characteristics

- Hot Standby function compatible with **140CPU67060, 140CPU67160, 140CPU67260, 140CPU67261** or **140CPU67861** CPUs
- Up to four **PTQ-PDPMV1** modules per rack when the Hot Standby function is active. Configuration in local rack only
- Application monitoring of active (primary) and passive (secondary) master modules via status words
- Profibus DP status words updated from the passive (secondary) master by a ping on the Profibus DP FDL link layer
- Detection of cable break with information on the number of slaves on the two segments of the broken bus
- Changeover time on Profibus DP bus for a 500 kbaud bus:
  - Typical: 100 ms
  - Max.: 300 ms

No parameter setting is required for Hot Standby operation, as the module automatically detects the Hot Standby configuration.

The ProSoft Configuration Builder (PCB) configuration software is useful to generate various DFBs for monitoring the status of the module and the bus, and managing data exchanges with the devices, keeping the input and output areas separate.

ProSoft Configuration Builder can also export a function module specific to the ProSoft Technology **PTQ-PDPMV1** module to Unity Pro.
This function module provides:
- DFBs
- Program sections with instantiated DFBs
- Dedicated animation tables
- A hyperlink to the PCB configurator

Additional products

Any information that may be required concerning the **PTQ-PDPMV1** *(1)* communication module and associated hardware and software products is available on the ProSoft Technology website http://www.prosoft-technology.com.

(1) Profibus DP from our partner ProSoft Technology (Collaborative Automation Partner Program).

3

Contents

3 - Discrete and analog I/O modules

Discrete I/O

Discrete input modules selection guide . . . . . *page 3/2*

Discrete output modules selection guide . . . . . *page 3/6*

Discrete mixed I/O modules selection guide . . . . . *page 3/10*

■ **Discrete I/O modules**

□ Presentation, description ..... *page 3/12*

□ References ..... *page 3/14*

Analog I/O

Analog I/O modules selection guide . . . . . *page 3/16*

■ **Analog I/O modules**

□ Presentation ..... *page 3/20*

□ Description ..... *page 3/21*

□ References ..... *page 3/22*

Modicon distributed I/O solutions

Distributed I/O solutions selection guide . . . . . *page 3/24*

■ **Modicon STB distributed I/O solution**

□ Presentation ..... *page 3/26*

□ Description ..... *page 3/27*

□ Composition ..... *page 3/28*

□ Configurations ..... *page 3/29*

Modicon Quantum automation platform

Discrete I/O modules

DC inputs

Type	32-channel discrete input modules		
Input voltage	5 V ⎓ TTL	24 V ⎓	
Modularity – Number of channels	32		
Modularity – Number of groups	4		
Modularity – Number of channels per common	8		
Isolation	By group		
Logic	Negative *(source)*	Positive *(sink)*	Negative *(source)*
I/O addresses	2 input words		
Protection of inputs	Resistor-limited		
Bus current required	170 mA	330 mA	
Power dissipation	5 W	1.7 + (0.36 x no. of channels at state 1) in W	1.5 + (0.26 x no. of channels at state 1) in W
External power supply (U_s)	4.5...5.5 V ⎓	–	19.2...30 V ⎓
External fuses	Depending on use		
Online modification of configuration *(1)*	Yes		
Functional safety certification	–	Non-interfering	–
Approvals	UL 508, CSA 22.2-142, CE, FM Class 1 Div. 2, ATEX Zone 2/22 *(3)*		
Type of module	**140DDI15310**	**140DDI35300**	**140DDI35310**
Page	3/14		

(1) For online modification of configuration, see page 2/37.
(2) For connection, requires the Modicon Telefast ABE 7 pre-wired system:
- Connection sub-bases **ABE7H08●●●/7H16●●●/7S16●●●** *(see page 7/2)*
- Connection cables **TSXCDP053/●03** *(see page 7/17)*

Type	96-channel discrete input module	32-channel discrete input module	16-channel discrete input module	32-channel discrete input module	24-channel discrete input module
Input voltage	24 V ⎓		10..0.60 V ⎓		125 V ⎓
Modularity – Number of channels	96	32	16	32	24
Modularity – Number of groups	6	4	8	4	3
Modularity – Number of channels per common	16	8	2	8	
Isolation	Per group				
Logic	Positive *(sink)*				
I/O addresses	6 input words	4 input words	1 input word	2 input words	
Protection of inputs	–				
Bus current required	270 mA	250 mA	200 mA	300 mA	200 mA
Power dissipation	1.35 + (0.13 x no. of channels at state 1) in W	–	1 + (0.62 x no. of channels at state 1) in W		
External power supply (U_s)	19.2...30 V ⎓	20...30 V ⎓ at 20 mA per group	10...60 V ⎓ (group power supply)		
External fuses	–		Depending on use		
Online modification of configuration *(1)*	Yes				
Functional safety certification	–				
Approvals	UL 508, CSA 22.2-142, cUL, FM Class 1 Div. 2, CE, ATEX Zone 2/22 *(3)*				
Type of module	**140DDI36400** *(2)*	**140DSI35300** *(3)*	**140DDI84100**	**140DDI85300**	**140DDI67300**
Page	3/14				

(3) Only Conformal Coating versions, depending on model, are ATEX Zone 2/22 certified. For more information, see pages 8/2 to 8/9.

More technical information on www.schneider-electric.com

Modicon Quantum automation platform

Discrete I/O modules

AC inputs

Type		16-channel discrete input modules	32-channel discrete input modules	32-channel discrete input modules
Input voltage		24 V ∼		48 V ∼
Input frequency		47...63 Hz		
Modularity	Number of channels	16	32	32
	Number of groups	16	4	4
	Number of channels per common	1	8	8
Isolation		No common point	By group	By group
I/O addresses		1 input word	2 input words	2 input words
Bus current required		180 mA	250 mA	250 mA
Maximum dissipated power		5.5 W	10.9 W	10.9 W
External power supply		–		
External fuses		Depending on use		
Online modification of configuration *(1)*		Yes		
Functional safety certification		–		
Approvals		UL 508, CSA 22.2-142, CE, FM Class 1 Div. 2, ATEX Zone 2/22 *(2)*		
Type of module		**140DAI34000**	**140DAI35300**	**140DAI45300**
Page		3/14		

(1) For online modification of configuration, see page 2/37.
(2) Only Conformal Coating versions, depending on model, are ATEX Zone 2/22 certified. For more information, see pages 8/2 to 8/9.

16-channel discrete input module		32-channel discrete input module	16-channel discrete input module	32-channel discrete input module
115 V ∼			230 V ∼	
47...63 Hz				
16		32	16	32
16	2	4	16	4
1	8		1	8
No common point	By group		No common point	By group
1 input word		2 input words	1 input word	2 input words
180 mA		250 mA	180 mA	250 mA
5.5 W		10.9 W	5.5 W	5 W
–				
Depending on use				
Yes				
–				
UL 508, CSA 22.2-142, cUL, FM Class 1 Div. 2, CE, ATEX Zone 2/22 *(2)*				
140DAI54000	**140DAI54300**	**140DAI55300**	**140DAI74000**	**140DAI75300**
3/14				

Modicon Quantum automation platform

Discrete I/O modules

DC and relay outputs

Type		32-channel discrete output modules			96-channel discrete output modules
Output voltage		5 V ⎓ TTL	24 V ⎓		
Modularity	Number of channels	32			96
	Number of groups	4			6
	Number of channels per common	8			16
Logic		Negative *(sink)*	Positive *(source)*	Negative *(sink)*	Positive *(source)*
Maximum load	Current per channel	75 mA	0.5 A		0.5 A
	Current per group	600 mA	4 A		3.2 A
	Current per module	2.4 A	16 A		19.2 A
I/O addresses		2 output words			6 output words
Bus current required		350 mA	330 mA		250 mA
Power dissipation		4 W	*(2)*	2.0 + (0.4 x total module load current) in W	7 W (all outputs at state 1)
External power supply (U_s)		4.5...5.5 V ⎓	19.2...30 V ⎓		
External fuses		–	Per group: 5 A Per point: 3 A recommended		Depending on use
Online modification of configuration *(1)*		Yes			
Functional safety certification		–	*(3)*	–	
Approvals		UL 508, CSA 22.2-142, CE, FM Class 1 Div. 2, ATEX Zone 2/22 *(5)*			
Module type		**140DDO15310**	**140DDO35300** **140DDO35301** *(2)*	**140DDO35310**	**140DDO36400** *(4)*
Page		3/14			

(1) For online modification of configuration, see page 2/37.
(2) **140DDO35300** module: *1.75 + (0.4 x total module load current) in W*
140DDO35301 module: *5 W, with all outputs at state 1.*
(3) Only module **140DDO35300** *is non-interfering.*

More technical information on www.schneider-electric.com

Type		16-channel discrete output module	12-channel discrete output module	32-channel discrete output module	16-channel discrete relay output module	8-channel discrete relay output module
Output voltage		10..0.60 V ⎓	24..0.125 V ⎓	10...30 V ⎓ controlled outputs	NO contacts	NO/NC contacts
Modularity	Number of channels	16	12	32	16	8
	Number of groups	2		4	16	8
	Number of channels per common	8	6	8	1	
Logic		Positive *(source)*			–	
Maximum load	Current per channel	2 A	0.75 A	0.5 A	2 A	5 A
	Current per group	6 A	3 A	4 A	–	–
	Current per module	12 A	6 A	16 A	–	40 A at 40°C 20 A at 60°C
I/O addresses		1 output word	1 output word and 1 input word	2 output words and 2 input words	1 output word	0.5 output word
Bus current required		160 mA	375 mA at 6 points 650 mA at 12 points	500 mA	1100 mA	560 mA
Power dissipation		1 + (1 x total module load current) in W	1 + (0.77 x no. of outputs at state 1) in W	2.5 + (0.1 x no. of outputs at state 1) + (0.4 x total load current) in W	5.5 + (0.5 x N) in W (where N = number of channels at state 1)	2.75 + (0.5 x N) in W (where N = number of channels at state 1)
External power supply (U_s)		10..0.60 V ⎓	–	10...30 V ⎓	–	
External fuses		Per group: 8 A Per point: 2 A recommended	–		Depending on use	
Online modification of configuration *(1)*		Yes				
Functional safety certification		–				
Approvals		UL 508, CSA 22.2-142, CE, FM Class 1 Div. 2, ATEX Zone 2/22 *(5)*				
Module type		**140DDO84300**	**140DDO88500**	**140DVO85300**	**140DRA84000**	**140DRC83000**
Page		3/14				

(4) For connection, requires the Modicon Telefast ABE 7 pre-wired system:
- Connection sub-bases ABE7R08S●●●/7S08●●●/7P08●●●/7R16●●●/7S16●●●/7P16●●● (see page 7/2)
- Connection cables TSXCDP053/●03 (see page 7/17)
(5) Only Conformal Coating versions, depending on model, are ATEX Zone 2/22 certified. For more information, see pages 8/2 to 8/9.

More technical information on www.schneider-electric.com

Modicon Quantum automation platform

Discrete I/O modules

AC outputs

Type		16-channel discrete output modules	
Output voltage		24...230 V ∼	24..0.115 V ∼
Output frequency		47...63 Hz	
Modularity	Number of channels	16	
	Number of groups	16	
	Number of channels per common	1	
Maximum load	Current per channel	4 A at 24…115 V ∼, 3 A at 200…230 V ∼	4 A at 20…132 V ∼
	Current per group	–	
	Current per module	16 A	
I/O addresses		1 output word	
Bus current required		350 mA	
Power dissipation		1.85 + (1.1 x total module load current) in W	1.85 + (1.1 x total module load current) in W
External power supply (U_s)		–	
External fuses		Per point: 5 A recommended	
Online modification of configuration *(1)*		Yes	
Functional safety certification		–	
Approvals		UL 508, CSA 22.2-142, CE, FM Class 1 Div. 2	
Type of module		**140DAO84000**	**140DAO84010**
Page		3/14	

(1) For online modification of configuration, see page 2/27.

Type		16-channel discrete output module		32-channel discrete output module
Output voltage		100...230 V ∼	24..0.48 V ∼	24...230 V ∼
Output frequency		47...63 Hz		
Modularity	Number of channels	16		32
	Number of groups	4		
	Number of channels per common	4		8
Maximum load	Current per channel	4 A at 85…132 V ∼, 3 A at 170…253 V ∼	4 A at 20…56 V	1 A at 20…253 V
	Current per group	4 A		
	Current per module	16 A		
I/O addresses		1 output word		2 output words
Bus current required		350 mA		320 mA
Power dissipation		1.85 + (1.1 x total module load current) in W		1.60 + (1 x total module load current) in W
External power supply (U_s)		85...253 V ∼	20...56 V ∼	–
External fuses		Depending on use		
Online modification of configuration *(1)*		Yes		
Functional safety certification		–		
Approvals		UL 508, CSA 22.2-142, CE, FM Class 1 Div. 2		
Type of module		**140DAO84210**	**140DAO84220**	**140DAO85300**
Page		3/14		

Modicon Quantum automation platform

Discrete I/O modules

Mixed I/O modules

Type		Mixed discrete I/O modules, 16 input channels and 8 output channels		Mixed discrete I/O modules, 4 input channels and 4 output channels
Voltage	Inputs	115 V ∼	24 V ⎓	125 V ⎓
	Outputs	115 V ∼	24 V ⎓	24..0.125 V ⎓
Frequency	Inputs/outputs	47...63 Hz	–	–
Modularity	Number of channels	16 inputs and 8 outputs		4 inputs and 4 isolated outputs
	Number of groups	2 groups of 8 input channels 2 groups of 4 output channels		1 group of 4 input channels 4 isolated output channels
Logic	Inputs	–	Positive *(sink)*	Positive *(sink)*
	Outputs	–	Positive *(source)*	Positive *(source)* or negative *(sink)*
Maximum load on outputs	Current per channel	4 A	0.5 A	4 A
	Current per group	4 A	2 A	–
	Current per module	8 A	4 A	16 A
I/O addresses		1 input word/0.5 output word		1 input word/1 output word
Bus current required		250 mA	330 mA	350 mA
Power dissipation		5.5 + (1.1 x total module load current) in W	1.75 + (0.36 x no. of inputs at state 1 + 1.1 x total output current) in W	0.4 + (1.0 x no. of inputs at state 1 + 0.75 x total output current) in W
External power supply (U_s)		85...132 V ∼ per group of outputs	–	–
External fuses		Depending on use	Inputs: depending on use Outputs: 1.25 A recommended per point	Inputs: depending on use
Online modification of configuration *(1)*		Yes		Yes
Functional safety certification		–		–
Approvals		UL 508, CSA 22.2-142, CE, FM Class 1 Div. 2, ATEX Zone 2/22 *(2)*		UL 508, CSA 22.2-142, CE, FM Class 1 Div. 2
Type of module		**140DAM59000**	**140DDM39000**	**140DDM69000**
Page		3/15		3/15

(1) For online modification of configuration, see page 2/37.

(2) Only Conformal Coating versions, depending on model, are ATEX Zone 2/22 certified. For more information, see pages 8/2 to 8/9.

Modicon Quantum automation platform

Discrete I/O modules

Presentation

The Modicon Quantum automation platform offers a complete range of discrete I/O modules designed to interface with a wide variety of devices. All these modules comply with the internationally recognized IEC electrical standards, which ensure their reliability in severe environments. For increased protection and extended life in extremely harsh environments, these modules can be ordered with a special treatment (see page 8/10).

Fully software-configurable

All Quantum I/O modules can be configured using Unity Pro software. Software allocation of the module I/O addresses simplifies adding or changing modules on the configuration, without intervention on the application program.

Definition of the behaviour of an output module in the event of a fault

The Quantum platform gives you the ability to predefine how a discrete output will behave in the event of a fault, if the module stops being controlled for any reason. The outputs can be configured by the software so that they will:

- Go to state 0
- Go to a predefined safe state
- Stay in the same state as at the time of the fault

The behaviour in the event of a fault can be defined for each output. If the module is changed, the previously defined states in the event of faults are sent to the replacement module.

Mechanical keying pins

It is possible to insert mechanical keying pins between the I/O module and its screw terminal block to ensure that the correct connector/module combination is used. These keying pins have codes that are unique to each type of module. When a rack contains identical modules, secondary keying pins can be used for the connector/module combination.
The keying pins are supplied with each I/O module.

I/O connectors

Each I/O module *(1)* requires a 40-way screw terminal block **140XTS00100, 140XTS00200**, to be ordered separately. These connectors are identical for all discrete *(1)* and analog I/O modules.

Description

140D●● discrete I/O modules have the following on the front panel:

1 Model number and colour code
2 A display block with LEDs
3 A removable hinged door and customizable identification label

To be ordered separately:
4 A 40-way screw terminal block **140XTS00200**

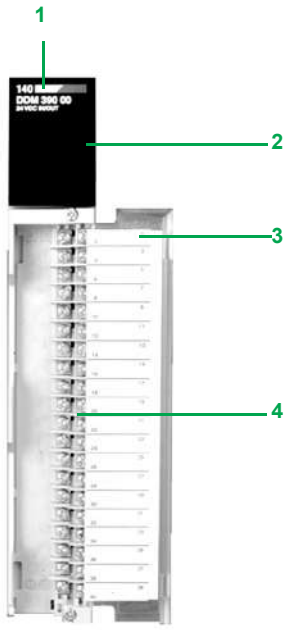

(1) Except for **140DDI36400** *and* **140DDO36400** *96-channel modules which require* **TSXCDP●●3** *connection cables (with one HE 10 connector at each end, to be used with the Modicon Telefast ABE 7 pre-wired system).*

Modicon Quantum automation platform

Discrete I/O modules

Display and diagnostics

The LEDs provide a wealth of information about each of the modules. This information includes both activity on the I/O points and characteristics specific to each module, such as indication of a wiring fault or blown fuse. Visual indication of the quality of the communication with the CPU is given by an “Active” display, which can be used for troubleshooting.

32-point I/O modules

Active		F	
1	9	17	25
2	10	18	26
3	11	19	27
4	12	20	28
5	13	21	29
6	14	22	30
7	15	23	31
8	16	24	32

LED	Colour	Indication when on
Active	Green	Communication present on bus
F	Red	External fault detected
1…32	Green	The I/O concerned has been activated

16-point I/O modules

Active		F	
1	9	1	9
2	10	2	10
3	11	3	11
4	12	4	12
5	13	5	13
6	14	6	14
7	15	7	15
8	16	8	16

LED	Colour	Meaning when on
Active	Green	Communication present on bus
F	Red	External fault detected
1…16	Green	The point concerned is activated
1…16	Red	There is a fault on the point indicated

Bi-directional discrete modules

Active		F
1	1	1
2	2	2
		3
		4

LED	Colour	Meaning when on
Active	Green	Communication present on bus
F	Red	No power supply to outputs or inputs out of tolerance
1 and 2, left column	Green	Output activated
1 and 2 middle column	Red	Fault detected on the output point
1 to 4, right column	Red	Fault detected on the input point

Modicon Quantum automation platform

Discrete I/O modules

Input modules and output modules

References

Discrete input modules

Voltage	Modularity	Description	Logic	Safety	Reference	Weight kg/*lb*
5 V ⎓ TTL	32 inputs	4 groups of 8 inputs	Negative	–	**140DDI15310**	0.450/ *0.992*
24 V ⎓	32 inputs	4 groups of 8 inputs	Positive	Non-interfering *(1)*	**140DDI35300**	0.300/ *0.661*
			Negative	–	**140DDI35310**	0.300/ *0.661*
	96 inputs	6 groups of 16 inputs	Positive	–	**140DDI36400**	0.300/ *0.661*
	32 inputs	4 groups of 8 inputs	Positive	–	**140DSI35300**	0.300/ *0.661*
10…60 V ⎓	16 inputs	8 groups of 2 inputs	Positive	–	**140DDI84100**	0.300/ *0.661*
	32 inputs	4 groups of 8 inputs	Positive	–	**140DDI85300**	0.295/ *0.650*
125 V ⎓	24 inputs	3 groups of 8 inputs	Positive	–	**140DDI67300**	0.300/ *0.661*
24 V ∿	16 inputs	No common point	–	–	**140DAI34000**	0.300/ *0.661*
	32 inputs	4 groups of 8 inputs	–	–	**140DAI35300**	0.340/ *0.750*
48 V ∿	32 inputs	4 groups of 8 inputs	–	–	**140DAI45300**	0.300/ *0.661*
115 V ∿	16 inputs	No common point	–	–	**140DAI54000**	0.310/ *0.683*
	16 inputs	2 groups of 8 inputs	–	–	**140DAI54300**	0.300/ *0.661*
	32 inputs	4 groups of 8 inputs	–	–	**140DAI55300**	0.330/ *0.728*
230 V ∿	16 inputs	No common point	–	–	**140DAI74000**	0.350/ *0.772*
	32 inputs	4 groups of 8 inputs	–	–	**140DAI75300**	0.300/ *0.661*

Discrete output modules

Voltage		Description	Logic	Safety	Reference	Weight kg/*lb*
5 V ⎓ TTL	32 outputs	4 groups of 8 outputs	Negative	–	**140DDO15310**	0.450/ *0.992*
24 V ⎓	32 outputs	4 groups of 8 outputs	Positive	Non-interfering *(1)*	**140DDO35300**	0.450/ *0.992*
			Positive *(2)*	–	**140DDO35301**	0.450/ *0.992*
			Negative	–	**140DDO35310**	0.450/ *0.992*
	96 outputs	6 groups of 16 outputs	Positive	–	**140DDO36400**	0.450/ *0.992*
10…30 V ⎓	32 outputs	4 groups of 8 outputs	Positive	–	**140DVO85300**	0.300/ *0.661*
10…60 V ⎓	16 outputs	2 groups of 8 outputs	Positive	–	**140DDO84300**	0.450/ *0.992*
24…125 V ⎓	12 outputs	2 groups of 6 outputs	Positive	–	**140DDO88500**	0.450/ *0.992*
Relay 20…250 V ∿ 5…150 V ⎓	16 outputs	No common point	1 “NO” contact	–	**140DRA84000**	0.410/ *0.904*
	8 outputs	No common point	2 “NC” and “NO” contacts	–	**140DRC83000**	0.300/ *0.661*
24…48 V ∿	16 outputs	4 groups of 4 outputs	–	–	**140DAO84220**	0.450/ *0.992*
24…115 V ∿	16 outputs	No common point	–	–	**140DAO84010**	0.485/ *1.069*
24…230 V ∿	16 outputs	No common point	–	–	**140DAO84000**	0.485/ *1.069*
	32 outputs	4 groups of 8 outputs	–	–	**140DAO85300**	0.450/ *0.992*
100…230 V ∿	16 outputs	4 groups of 4 outputs	–	–	**140DAO84210**	0.450/ *0.992*

(1) Version ⩾ 1.
(2) Outputs protected against short-circuits and overloads by thermal monitoring.

CPUs: page 1/2
I/O architectures: page 2/6
Communication: page 5/2
Safety modules: page 6/2

Modicon Quantum automation platform

Discrete I/O modules

Mixed I/O modules and accessories

References (continued)

Mixed discrete I/O modules

Number	Inputs	Outputs	Safety	Reference	Weight kg/*lb*
24 I/O	**16 inputs 24 V ⎓** 2 groups of 8, positive logic	**8 outputs 24 V ⎓** 2 groups of 4, positive logic	–	**140DDM39000**	0.300/ *0.661*
	16 inputs 125 V ∿ 2 groups of 8	**8 outputs 125 V ∿** 2 groups of 4	–	**140DAM59000**	0.450/ *0.992*
8 I/O	**4 inputs 125 V ⎓** 1 group of 4, positive logic	**4 outputs 24…125 V ⎓** No common point, positive or negative logic	–	**140DDM69000**	0.300/ *0.661*

Accessories

Description	Sold in lots of	Safety	Reference	Weight kg/*lb*
40-way screw terminal block for I/O modules *(1)* Degree of protection < IP 20	–	Non-interfering	**140XTS00200**	0.150/ *0.331*
40-way screw terminal block for I/O modules *(1)* Degree of protection IP 20	–	–	**140XTS00100**	–
Empty module without screw terminal block	–	–	**140XCP50000**	–
Empty module with hinged cover without screw terminal block	–	–	**140XCP51000**	–
Pack of jumpers for 40-way screw terminal block	12	–	**140XCP60000**	–

Connection cables for I/O modules with HE 10 connectors

Description	Used for	Gauge Cross-sect.	Length m/*ft*	Reference	Weight kg/*lb*
Connection cables 1 HE 10 connector at each end	96-channel modules 140DDI36400 140DDO36400 With Modicon Telefast ABE 7 pre-wired system (see page 7/8)	AWG 22 0.324 mm²	0.5/ *1.64*	**TSXCDP053**	0.085/ *0.187*
			1/ *3.28*	**TSXCDP103**	0.150/ *0.331*
			2/ *6.56*	**TSXCDP203**	0.280/ *0.617*
			3/ *9.84*	**TSXCDP303**	0.410/ *0.904*
			5/ *16.40*	**TSXCDP503**	0.670/ *1.477*
			10/ *32.81*	**TSXCDP1003**	1.180/ *2.601*

Replacement parts

Description	Sold in lots of	Reference	Weight kg/*lb*
Set of keying pins for 40-way screw terminal blocks	60	**140XCP20000**	–

(1) Except for 96-channel modules **140DDI36400** *and* **140DDO36400** *which are connected via 6 HE 10 connectors. Require the Modicon Telefast ABE 7 pre-wired system.*

Modicon Quantum automation platform

Analog I/O modules

Current/voltage, temperature probe, thermocouple inputs

Type	Analog input modules, 8 channels and 16 channels		
Number of channels	8 differential	16 differential or 16 with common point	8 differential
Input range	4…20 mA 1…5 V	0…25 mA 0…20 mA 4…20 mA	0…20 mA, ± 20 mA, 4…20 mA 0…10 V, ± 10 V 0…5 V, ± 5 V 1…5 V
Resolution	12 bits	0...25 mA: 0…25,000 points 0...20 mA: 0…20,000 points 4...20 mA: 0…16,000 points (default) 4...20 mA: 0...4095 points	14/15/16 bits depending on range
I/O addresses	9 input words	17 input words	9 input words
Isolation between channels (max.)	30 V ⎓		200 V ⎓ 135 V ∿ rms
Bus current required	240 mA	360 mA	280 mA
Maximum dissipated power	2 W	5 W	2.2 W
External power supply (U_s)	Not required		
External fuse	–		
Online modification of configuration *(1)*	Yes		
Functional safety certification	–	Non-interfering	–
Approvals	UL 508, CSA 22.2-142, CE, FM Class 1 Div. 2, ATEX Zone 2/22 *(2)*		
Type of module	**140ACI03000**	**140ACI04000**	**140AVI03000**
Page	3/22		

(1) For online modification of configuration, see page 2/37.
(2) Only Conformal Coating versions, depending on model, are ATEX Zone 2/22 certified. For more information, see pages 8/2 to 8/9.

Type	RTD analog input modules, 8 channels	TC analog input modules, 8 channels
Number of channels	8	8
Input range	2, 3 or 4-wire RTD temperature probe, types: ■ IEC platinum: □ Pt 100, Pt 200, Pt 500, Pt 1000: - 200...+ 850°C ■ US platinum: □ Pt 100, Pt 200, Pt 500, Pt 1000: - 100...+ 450°C ■ Nickel: □ Ni 100, Ni 200, Ni 500, Ni 1000: - 60...+ 180°C	TC thermocouple types: ■ J: - 210...+ 760°C ■ K: - 270...+ 1370°C ■ E: - 270...+ 1000°C ■ T: - 270...+ 400°C ■ S: - 50...+ 1665°C ■ R: - 50...+ 1665°C ■ B: - 130...+ 1820°C ■ mV: - 100...+ 100 mV, - 25...+ 25 mV
Resolution	0.1°C	1°C (default) 0.1°C 1°F 0.1°F
I/O addresses	9 input words	10 input words
Isolation between channels (max.)	300 V peak	220 V ∿ at 47…63 Hz or 300 V ⎓ max.
Bus current required	200 mA	280 mA
Maximum dissipated power	1 W	1.5 W
External power supply (U_s)	–	
External fuse	–	
Online modification of configuration *(1)*	Yes	
Functional safety certification	–	
Approvals	UL 508, CSA 22.2-142, CE, FM Class 1 Div. 2	
Type of module	**140ARI03010**	**140ATI03000**
Page	3/22	

Modicon Quantum automation platform

Analog I/O modules

Current/voltage outputs, mixed I/O

Type	Analog output module, 4 channels and 8 channels		
Number of channels	4	8	4
Input range	4…20 mA	0…25 mA 0…20 mA 4…20 mA	0…10 V 0…5 V ± 10 V ± 5 V
Resolution	12 bits	0…25 mA: 0…25,000 points 0…20 mA: 0…20,000 points 4…20 mA: 0…16,000 points (default) 4…20 mA: 0…4095 points	12 bits
I/O addresses	4 output words	8 output words	4 output words
Isolation between channels	500 V ∿ at 47…63 Hz or 750 V ⎓ for 1 minute	None	500 V ∿ at 47…63 Hz for 1 minute
Bus current required	480 mA	550 mA	700 mA
Maximum dissipated power	5.3 W	5.0 W	4.5 W
External power supply (U_s)	12...30 V ⎓	6...30 V ⎓ max.	–
External fuse	–		0.063 mA, 250 V 3AG fast-blow *(2)*
Online modification of configuration *(1)*	Yes		
Functional safety certification	Non-interfering	–	
Approvals	UL 508, CSA 22.2-142, CE, FM Class 1 Div. 2, ATEX Zone 2/22 *(3)*		
Type of module	**140ACO02000**	**140ACO13000**	**140AVO02000**
Page	3/22		

(1) For online modification of configuration, see page 2/37.
(2) External fuse to be used on the "Master Override" signal when it is connected to an external source.

Type	Mixed analog I/O module	
Number of channels	4 inputs and 2 isolated outputs	
Input range	Inputs: 0…10 V, 0…5 V, 0…20 mA ± 10 V, ± 5 V, ± 20 mA 1…5 V, 4…20 mA	Outputs: 4...20 mA
Resolution	Inputs: 16 bits max. Outputs: 12 bits	
I/O addresses	5 input words and 2 output words	
Isolation between channels	Inputs: ± 40 V ⎓ max.	
Bus current required	350 mA	
Maximum dissipated power	–	
External power supply (U_s)	–	
External fuse	Depending on use	
Online modification of configuration *(1)*	Yes	
Functional safety certification	–	
Approvals	UL 508, CSA 22.2-142, CE, FM Class 1 Div. 2, ATEX Zone 2/22 *(3)*	
Type of module	**140AMM09000**	
Page	3/22	

(3) Only Conformal Coating versions, depending on model, are ATEX Zone 2/22 certified. For more information, see pages 8/2 to 8/9.

3

Modicon Quantum automation platform

Analog I/O modules

Presentation

The Modicon Quantum automation platform offers a complete range of analog I/O modules designed to interface with a wide variety of devices. All these modules comply with internationally accepted IEC electrical standards that ensure their reliability in severe environments. For increased protection and extended life in extremely harsh environments, these modules can be ordered with a special treatment.

Fully software-configurable

All Quantum I/O modules can be configured using Unity Pro software. Software allocation of the module I/O addresses simplifies adding or changing modules on the configuration, without intervention on the application program.

I/O Map zoom function

Analog modules frequently require the specification of particular parameters for various functions. The ability of the Quantum platform to configure multifunction modules via the software eliminates the need for selection using miniswitches or complex programming. A software function, called I/O Map zoom, provides access to a configuration screen in which the operational parameters of the module can be initialized or modified. This zoom technique is used on multifunction analog input modules, fast counters or temperature measurement modules using thermocouples or RTDs.

Definition of the behaviour of the output modules in the event of a fault

The Quantum platform gives you the ability to predefine how an analog output channel will behave in the event of a fault, if the module stops being controlled for any reason. The outputs can be configured in the software so that they will:

- Go to state 0
- Go to a predefined safe state
- Maintain the value they had at the time of the fault

The behaviour in the event of a fault can be defined for each channel. If the module is changed, the individually defined states in the event of faults are sent to the replacement module.

Mechanical keying pins

Optionally, primary mechanical keying pins can be inserted between the I/O module and its screw terminal block to ensure that the correct connector/module pairing is used. These primary keying pins are unique to each type of module. Secondary mechanical keying pins can be used, for example so that a rack containing identical modules, thus with the same primary keying pin, has the correct connector/module pairings. The keying pins are supplied with each I/O module.

I/O connectors

Each I/O module requires a **140XTS00200** I/O connector, to be ordered separately. This connector is identical for all the I/O modules.

The "Grounding and Electromagnetic Compatibility of PLC Systems. Basic Principles and Measures. User Manual" no. 33002439 provides helpful information on setting up Modicon Quantum PLCs in accordance with the directives and legal regulations in force in the European Union and North America.

Modicon Quantum automation platform

Analog I/O modules

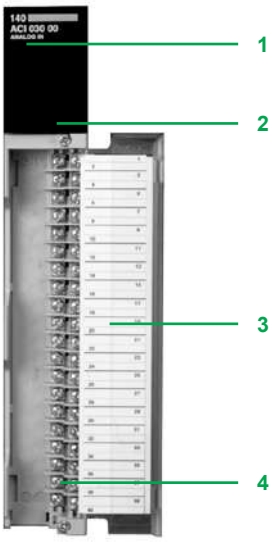

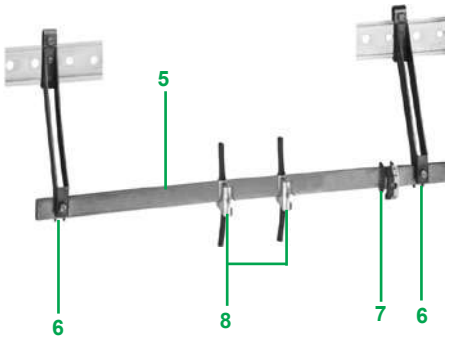

Description

The **140A●I/A●O/AMM** analog I/O module front panel comprises:

1 Model number and colour code

2 A display block with LEDs:
- □ Active LED (green): Communication bus detected as present
- □ F LED (red): A fault (external to the module) has been detected
- □ LED 1...16 (green): The indicated point or channel is on
- □ LED 1...16 (red): Fault present on the indicated point or channel

3 A removable hinged door and customizable identification label

To be ordered separately:

4 A 40-way screw terminal block **140XTS00200** (degree of protection < IP 20) or **140XTS00100** (degree of protection IP 20)

■ Earthing of the cable shielding is mandatory. The optional earthing kit **STBXSP3000** can also be used to secure cables in installations subject to severe vibration.

The **STBXSP3000** optional earthing kit comprises:
- □ **5** A metal bar which takes the clamping rings
- □ **6** Two sub-bases to be mounted on the rack
- □ **7** An earthing terminal
- □ **8** Spring mounting rings **STBXSP3010** for 1.5…6 mm² cross-section cables or **STBXSP3020** for 5…11 mm² cross-section cables, to be ordered separately

3

Modicon Quantum automation platform

Analog I/O modules

Input, output and mixed modules

Analog input modules

Description	Range	Safety	Reference	Weight kg/*lb*
8 high level channels 12-bit, unipolar	4...20 mA 1... 5 V	–	**140ACI03000**	0.300/ *0.984*
16 high level channels 0…25,000 points, unipolar	0...20 mA, 0...25 mA 4...20 mA	Non-interfering	**140ACI04000**	0.300/ *0.984*
8 RTD channels 13-bit	Ni 100, Ni 200, Ni 500, Ni 1000, Pt 100, Pt 200, Pt 500, Pt 1000	–	**140ARI03010**	0.300/ *0.984*
8 thermocouple and low level channels 16-bit	Types J, K, E, T, S, R, B ± 25 mV, ± 100 mV	–	**140ATI03000**	0.300/ *0.984*
8 high level channels 16-bit, bipolar	± 20 mA, 0…20 mA, 4…20 mA ± 10 V, ± 5 V, 0…10 V, 0…5 V, 1…5 V	–	**140AVI03000**	0.300/ *0.984*

Analog output modules

Description	Range	Safety	Reference	Weight kg/*lb*
4 current channels 12-bit	4...20 mA	Non-interfering	**140ACO02000**	0.300/ *0.984*
8 current channels 0…25,000 points	0...20 mA 0...25 mA 4...20 mA	–	**140ACO13000**	0.300/ *0.984*
4 high level voltage channels 12-bit	± 5 V, ± 10 V 0…5 V, 0…10 V	–	**140AVO02000**	0.300/ *0.984*

Mixed analog I/O modules

Description	Range	Safety	Reference	Weight kg/*lb*
4 input channels, 14…16-bit	± 20 mA, 0…20 mA, 4…20 mA ± 5 V, ± 10 V, 0…5 V, 0…10 V, 1…5 V	–	**140AMM09000**	0.300/ *0.984*
2 output channels 12-bit	4…20 mA			

CPUs: page 1/2
I/O architectures: page 2/6
Communication: page 5/2
Safety modules: page 6/2

Schneider Electric

Modicon Quantum automation platform

Analog I/O modules

Accessories

STBXSP3000 + STBXSP3010/3020

Accessories					
Description	**Degree of protection**	**Sold in lots of**	**Safety**	**Reference**	**Weight kg/*lb***
40-way screw terminal blocks Required for all analog I/O modules	< IP 20	–	Non-interfering	**140XTS00200**	0.150/ *0.492*
	IP 20	–	–	**140XTS00100**	–
Keying pin kit for screw terminal block	–	60	–	**140XCP20000**	–
Earthing kit	–	–	–	**STBXSP3000**	–
Spring clamping rings for earthing kit	–	10	–	**STBXSP3010**	–
	–	10	–	**STBXSP3020**	–

3

Modicon distributed I/O solutions

Type of splitter box and module		Monobloc IP 67 I/O splitter boxes
		Modicon ETB
Available buses and networks		Ethernet Modbus TCP/IP EtherNet/IP
Max. number per connection point		
Discrete I/O	Modularity	Splitter box with 16 configurable I/O, 16 I, 12 I + 4 O, or 8 I + 8 O
	Input voltage	24 V ⎓
	Output voltage	24 V ⎓
Analog I/O		–
Application-specific I/O		–
		–
I/O connection		M12 connectors
Type of housing		Plastic
Type of module		**ETB1E●●●**
Pages		Please consult the catalog pages on our website www.schneider-electric.com

Monobloc IP 20 distributed I/O	Optimum IP 20 distributed I/O	Modular IP 20 distributed I/O
Modicon Momentum	Modicon OTB	Modicon STB
Ethernet Modbus TCP/IP Modbus Plus Fipio InterBus Profibus DP DeviceNet	Ethernet Modbus TCP/IP CANopen Modbus (RS 485)	Ethernet Modbus TCP/IP EtherNet/IP CANopen Modbus Plus Fipio InterBus Profibus DP DeviceNet
1 I/O base with 1 CPU or 1 communication module	1 interface module + 7 Twido expansion modules	1 NIM (Network Interface Module) + 32 I/O modules
I/O base with 16 I, 32 I, 8 O, 16 O, 32 O, 10 I/8 O, 16 I/8 O, 16 I/12 O and 16 I/16 O	12 I/8 O (interface module) 8 I, 16 I, 32 I, 8 O, 16 O, 32 O, 4 I/4 O and 16 I/8 O (expansion modules)	Module with 2 I, 4 I, 6 I, 16 I, 2 O, 4 O, 6 O or 16 O
24 V ⎓, 120 V ∿ and 230 V ∿	24 V ⎓	24 V ⎓, 115 V ∿ and 230 V ∿
24 V ⎓ V, 120 V ∿ and 230 V ∿ and relay	24 V ⎓ and relay	24 V ⎓, 115/230 V ∿ and relay
8 I, 16 I or 4 O voltage/current I/O bases I/O base with 4 thermocouple or probe inputs	2 I, 4 I, 8 I, 1 O, 2 O, 2 I/1 O and 4 I/2 O (expansion modules) voltage/current, thermocouple or temperature probe	Modules with 2, 4 or 8 inputs and 1 or 2 outputs (voltage/current) Module with 2 thermocouple or probe inputs
10 kHz/200 kHz 2-channel counter sub-base	Integrated in interface module: - Two 5 kHz/20 kHz channels - 2 PWM function channels	Counter module with one 40 kHz channel HART multiplexer module - 4 HART channels per HART multiplexer module - Up to 8 HART multiplexer modules per island
6 I/3 O 120 V ∿ sub-base with 1 Modbus port	–	Parallel interface modules for TeSys Quickfit and TeSys U motor starters, integrated connection for third-party CANopen products
Screw or spring-type removable terminal blocks	Removable screw terminal block (interface module) Removable screw terminal block, non-removable spring-type terminal block and HE 10 connector (expansion modules)	Removable screw or spring-type connectors, Telefast connectors
Plastic		
170A●	**OTB1●0DM9LP**	**STB●●●**
Please consult the catalog pages on our website www.schneider-electric.com		

Modicon STB distributed I/O solution

Open and modular system

Color code	Type of module
	NIM network interface EOS/BOS island expansion CANopen expansion
	24 V ⎓ discrete inputs
	24 V ⎓ supply distribution 24 V ⎓ discrete outputs
	115 V ∿ or 230 V ∿ discrete current inputs
	115/230 V ∿ supply distribution 115/230 V ∿ discrete current outputs
	Discrete relay outputs TeSys U and TeSys Quickfit interface, counter module
	Analog inputs
	Analog outputs

Presentation *(1)*

To meet the needs of machine manufacturers and users, automation architectures have been decentralized while delivering performance close to that of centralized systems.

Architectures based around islands installed as close to the machine as possible reduce the time and cost of wiring for sensors and actuators, while increasing system availability.

The Modicon STB distributed I/O solution is an open, modular input/output system that makes it possible to design automation islands managed by a master controller via a bus or communication network.
These islands can be used to connect:
- TeSys U or TeSys T starter-controllers
- Altivar variable speed drives
- FTB IP 67 distributed I/O
- OsiSense rotary encoders
- Magelis operator dialog terminals
- Approved third-party products via the CANopen bus: Bosch, Festo, Parker solenoid valves, Balluff linear encoders, etc. (1)

Advantys software guides users through the design phase, start-up, and even maintenance of the system. This single software package covers the Modicon STB, OTB, FTB, and FTM ranges.

The island components are electronic modules mounted on one or more DIN rails. These clusters of modules, known as segments, carry a bus from beginning to end of each island. The island bus provides power distribution, signal sensing, and power management to compatible modules, in the form of a wiring management system.

The Modicon STB I/O family is divided into 2 groups of modules:
- **Basic modules:** A complete set of low-cost modules, with simplified operating modes
- **Standard modules:** An expanded offer of I/O modules, with additional functions: Configurable parameters, expanded operating modes

The basic range comprises:
- PDM power distribution modules (24 V ⎓ and 115/230 V ∿)
- I/O modules:
  - Discrete I/O (24 V ⎓)
  - Analog I/O (10-bit resolution)

The standard range comprises:
- NIM modules: network interfaces
- PDM power distribution modules (24 V ⎓ and 115/230 V ∿)
- I/O modules:
  - Discrete I/O (24 V ⎓ and 115/230 V ∿)
  - Analog I/O (10, 12 and 16-bit resolution)
  - Relay outputs (24 V ⎓ coil and 24 V ⎓ contact or 115/230 V ∿)
- Application module: Counter module, HART multiplexer module
- Dedicated module: For TeSys U and TeSys Quickfit applications
- EOS end of segment and BOS beginning of segment modules
- External equipment support module on CANopen expansion module

Standard and basic modules can be combined on the same island. Combining them in this way allows a wide range of functions *(1)*.

The sensors and actuators are connected to the I/O modules via removable screw or spring-type terminals *(2)*.
Standard Modicon STB I/O modules are hot-swappable, provided the network interface modules are also standard type.
Modicon STB distributed I/O islands have a protection rating of IP 20. For installations in production workshops, they must be housed in enclosures providing at least IP 54 (complying to IEC 60950 or NEMA 250) *(1)*.

(1) For further information, please consult our "Modicon STB IP 20 distributed I/O" catalog available on our website www.schneider-electric.com.
(2) For much easier wiring and to free up space in the electrical cabinet, Modicon STB 16-channel discrete I/O modules can be combined with Modicon Telefast ABE 7 pre-wired or adapter blocks.

Modicon STB distributed I/O solution

Open and modular system

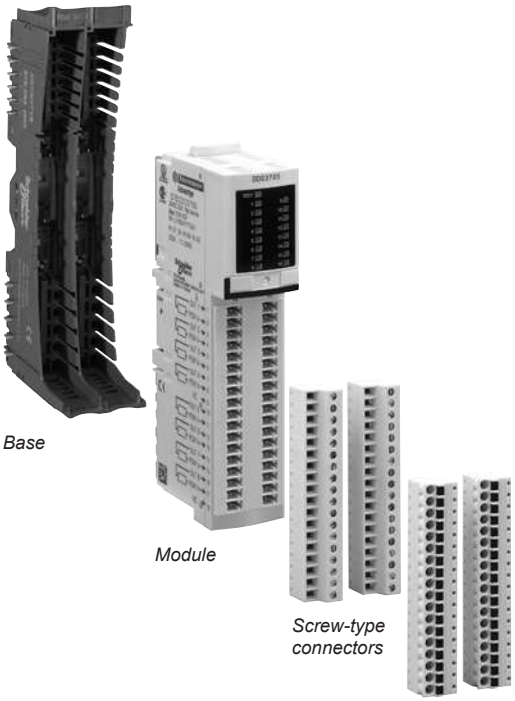

Base

Module

Screw-type connectors

Spring-type connectors

Modicon STB modules *(1)*

The Modicon STB module references allow you to acquire the following items under a single reference:

- A module
- Its base
- The appropriate screw-type and/or spring-type connectors

The following table gives the contents of the Modicon STB modules and the general form of their references *(1)*.

Module	Contents	Reference *(1)*
NIM network interface	Module, screw-type and spring-type connectors (base not required), bus terminator, documentation on mini CD-ROM *(2) (3)*	**STBN●●●●●●**
Power distribution module (PDM)	Base, module, screw-type and spring-type connectors	**STB●●●●●●●K**
Discrete I/O (except 16-channel)		
Analog I/O		
EOS and BOS island bus expansion module		
CANopen bus expansion module		
Auxiliary power supply		
TeSys U and TeSys Quickfit interface		
Discrete I/O 16-channel	Base, module, screw-type connectors	**STBDD●37●5KS**
	Base, module, spring-type connectors	**STBDD●37●5KC**
	Module *(4)*	**STBDD●37●5**
Counting	Base, module, spring-type connectors	**STBEHC3020KC**

(1) For further information, please consult our "Modicon STB IP 20 distributed I/O" catalog available on our website www.schneider-electric.com.
(2) DeviceNet STBNDN●●●● NIM network interface module: order the 5-way screw and spring-type removable terminals (fieldbus connection) separately (1).
(3) An English language mini-CD-ROM containing the user documentation, a label template and one exchange file per network type. The user documentation is also available on our website www.schneider-electric.com.
(4) For use with the Modicon Telefast ABE 7 pre-wired or adapter system:
- STBXBA3000 base to be ordered separately (1)
- Telefast ABE 7 base and connection accessories to be ordered separately (1)

Modicon STB distributed I/O solution

Open and modular system

Composition of a Modicon STB island *(1)*

A Modicon STB island is made up of one or more segments comprising PDMs *(Power Distribution Modules)* and I/O modules.
The island begins with a NIM network interface module and ends with a bus terminator supplied with the NIM.
An island can be made up of a single segment or a primary segment and up to 6 expansion segments.
The island's segments are chained by EOS *(End Of Segment)* and BOS *(Beginning Of Segment)* internal bus expansion modules.

On each segment:
■ Place the PDMs immediately to the right of the network interface modules or expansion modules.
■ Place the I/O modules to the right of the PDM module supplying them with power.
■ Each module (with the exception of the NIM network interface module), is held in a fixing base on the DIN rail.
Three module and base widths are possible. On the DIN rail, the overall width needed for a segment is the sum of widths of the network interface module, the bases and any bus terminator.

The bases provide continuity of the internal bus, auto-addressing of the modules, and separated and isolated distribution of the internal power supplies, actuators (outputs) and sensors (inputs).
The advantages of this arrangement are:
■ Unplugging modules:
□ When switched off *(cold swap)*, modules can be unplugged very quickly
□ When switched on *(hot swap)*, I/O modules can be unplugged provided the network interface module is the standard type
■ Output power supply independent of inputs: For example, if an output power supply is cut by a Preventa module, the inputs are still managed.
■ Immunity of inputs: For example, the closing of power contactors (controlled by outputs) does not disturb analog input measurements.

Network Interface Module *(NIM)*:
This module manages communications on the island bus. It acts as a gateway for exchanges with the fieldbus or network master.

Various NIM network interface modules (only standard type) are available for the following major fieldbuses or industrial networks:
■ Ethernet Modbus TCP/IP: Single or double port Network Interface Modules
■ EtherNet/IP, Modbus Plus and Fipio: Only standard type NIM network interface modules
■ CANopen, InterBus, Modbus Plus, Fipio, Profibus DP and DeviceNet

(1) For further information, please consult our "Modicon STB IP 20 distributed I/O" catalog available on our website www.schneider-electric.com.

Modicon STB distributed I/O solution

Open and modular system

Control system configuration example *(1)*

NIM network interface modules STBN●●2●1●, located at the beginning of each island, are gateways for exchanging data between the network or bus master PLC and the Modicon STB automation island.

Standard NIM network interface modules STBN●●2●1● can be used to configure and address the installation external devices. These settings are stored in the module's internal RAM or Flash memory. Optionally, they can be saved to the 32 KB removable SIM card STBXMP4440 (except for the address of the network connection point) to duplicate the configuration from one island to another.

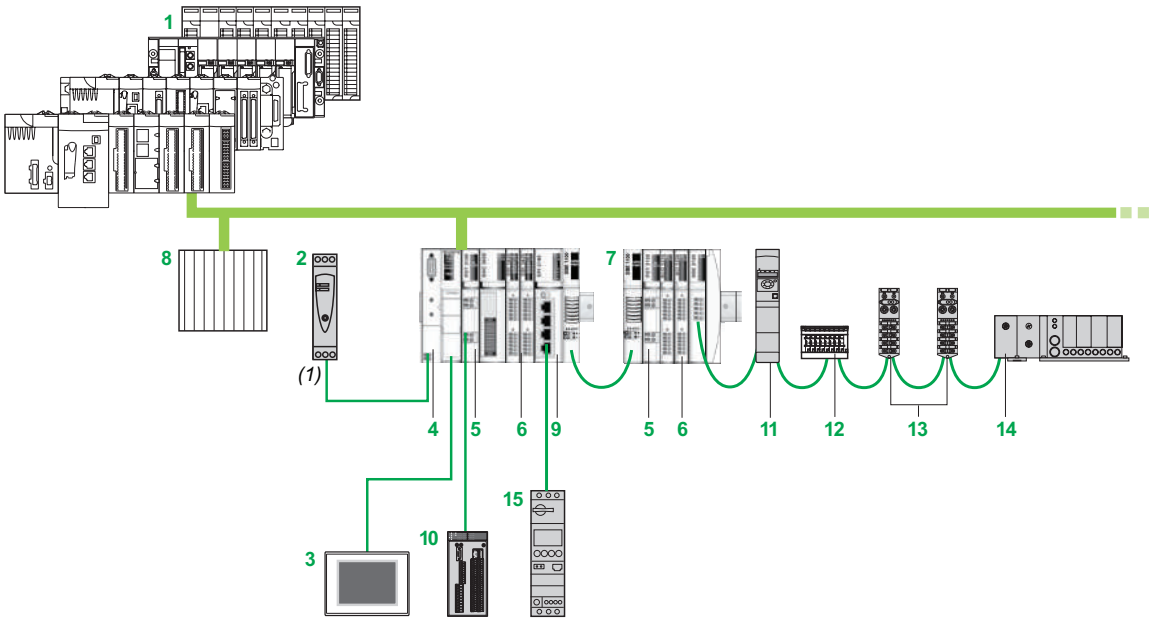

The control system configuration in the above example comprises:

1 Modicon M580/M340/Premium/Quantum automation platform
2 24 V ⎓ external power supply
3 HMI terminal with Magelis XBT, XBT G, XBT GT, etc, type Modbus link *(1)*
4 Network Interface Module *(NIM)*
5 Power Distribution Module *(PDM)*
6 I/O modules
7 Second STB segment
8 Another control system
9 Parallel interface module for TeSys U and TeSys Quickfit starter-controllers
10 Configurable Preventa XPS MC safety controller connected on the power supply to the outputs of power distribution module STBPDT●100K
11 ATV 32 variable speed drive
12 Festo solenoid valves
13 Modicon FTB IP 67 I/O
14 Parker solenoid valves
15 TeSys U starter-controller

(1) For further information, please consult our "Modicon STB IP 20 distributed I/O" catalog available on our website www.schneider-electric.com.

4

Contents

4 - Application-specific modules and solutions

Application-specific modules

Counter and special-purpose module selection guide . . . . . page 4/2

■ **High-speed counter modules**

□ Presentation ..... *page 4/4*

□ Description, references..... *page 4/5*

■ **High-speed input interrupt module**

□ Presentation, functions ..... *page 4/6*

□ Interrupts ..... *page 4/7*

□ Performance..... *page 4/7*

□ References ..... *page 4/7*

■ **Accurate time stamping, multifunction input module**

□ Presentation, operation ..... *page 4/8*

□ Description, references ..... *page 4/9*

■ **Quantum-Sy/Max integration**

□ Presentation ..... *page 4/10*

□ References .....*page 4/11*

4

Modicon Quantum automation platform

Counter and special-purpose modules

Type		High-speed counter modules	
Number of channels		5 counter inputs 8 discrete inputs 8 discrete outputs	2 counter inputs 4 discrete outputs (2 outputs per counter channel)
I/O	Counter inputs	Frequency: 100 kHz (5 V ⎓) or 20 kHz (24 V ⎓) Cyclic ratio: 1/1 Input current: 8 mA (5 V ⎓) or 7 mA (24 V ⎓)	Single-ended or differential inputs Frequency: 500 kHz (5/12/24 V ⎓)
	Discrete inputs	24 V ⎓ Input current (typical): 5 mA	–
	Discrete outputs	24 V ⎓ (FET output) Load current per output: 210 mA max.	24 V ⎓ (FET output) Load current per output: 500 mA max.
	Clock signal input	–	
Functions		5-channel counter for incremental encoder inputs 16-bit counter (65,635 points) or 32-bit counters (2,147,483,647 points)	2-channel counter for incremental encoder or quadrature inputs 16-bit counter (65,635 points) or 32-bit counters (2,147,483,647 points)
Unity Pro software compatibility		Yes	
I/O addresses		13 input words/13 output words	6 input words/6 output words
Bus current required		250 mA	650 mA
Maximum dissipated power		6 W	4 + (0.4 x total module load current) in W
External power supply (U_s)		19.2...30 V ⎓	
External fuse		Depending on use	
Support rack		Local, remote (RIO)	
Functional safety certification		–	
Module type		**140EHC10500**	**140EHC20200**
Page		4/4	

High-speed input interrupt module	Accurate time stamping Multifunction input modules
16 isolated discrete inputs	32 discrete inputs, divided into 2 groups of 16 inputs 3 clock signal inputs
–	
24 V ⎓ State 1: 15... 30 V ⎓ State 0: - 3...+ 5 V ⎓	24...125 V ⎓ State 1: Nominal 100% of the reference input voltage for the group, max. 125%, min. 75% State 0: Nominal 0% of the reference input voltage for the group, max. +15%, min. -5% Maximum cable length: 400 m unshielded, 600 m shielded
–	
–	Data format: Compliant with standards DCF 77, IRIG-B, TSXNTP100 Input power supply: 24 V ⎓, 5 VDC on RS485
3 operating modes: - Interrupt handling mode on rising edge or falling edge (order of priority, depending on module addressing and channel no. in the module) - Automatic latch/unlatch mode on rising edge (30 µs min.) or falling edge (130 µs min.) - High-speed input mode on rising edge (30 µs min.) or falling edge (130 µs min.)	5 operating modes: - Discrete inputs processed cyclically - Event inputs (4096 time-stamped events/module) - Counter inputs (32-bit, 500 Hz) - Periodic time stamping - Time-delayed switching
Yes	
1 input word	–
400 mA	300 mA
2 + (0.3 x number of active points) in W	7.5 W (maximum power dissipated by the discrete inputs)
Not needed for this module	24...125 V ⎓
Depending on use	
Local only	Local, remote (RIO) and distributed (DIO)
–	
140HLI34000	**140ERT85420**
4/7	4/8

Modicon Quantum automation platform

High-speed counter modules

Presentation

The Quantum automation platform offers two processor-controlled high-speed counter modules, the **140EHC10500** module and the **140EHC20200** module. These modules independently count pulses at high speeds. They automatically report the count value to the CPU on every scan and, if the counter is installed in the local rack, they can update the CPU asynchronously to the scan (via the IMOD instruction in LL984 language).

140EHC10500 module

The **140EHC10500** is a five-channel high-speed counter, which can be configured in one of four operating modes. This module is ideal for the incremental high-speed counting of pulses up to 100 kHz at 5 V ⎓ or 20 kHz at 24 V ⎓. The operating mode for each channel can be configured easily via the zoom screen in Unity Pro. These operating modes can be defined as follows:

- 32-bit event counters on one or all channels, with output mode specified (latched or timed)
- 32-bit differential counters that use two channels per function - the difference between the count values on each channel is reported to the CPU. A module can be configured to handle two differential counters, two channels per function
- 16-bit repetitive counters on one or all channels; the counter repeats the count after reaching the setpoint
- 32-bit rate counters on one or all channels; the rate is sampled over a time interval specified as either 1 s or 100 ms

The counter configuration also includes 8 outputs, each of which can be triggered by a setpoint or by a programmable count value in upcount/downcount operations. Each of the outputs can be configured as follows:

- Output turns on at setpoint, either latched or as a one-shot
- Output turns on at final value, either latched or as a one-shot
- Output changes state on rising or falling edge applications
- Output turns on after a specified time delay from a final count value (16,383 ms max.)

140EHC20200 module

The **140EHC20200** is a 2-channel module best suited to high-speed counting applications up to 500 kHz or applications that require a quadrature encoder interface. The operating mode for each channel can be configured easily via the zoom screen in Unity Pro. These operating modes can be defined as follows:

- 16-bit counters on one or both channels with two outputs, configurable in incremental or quadrature mode
- 32-bit counters that use both channels with two outputs, configurable in incremental or quadrature mode
- 32-bit counters on one or both channels with no outputs, configurable for incremental or quadrature mode
- 16-bit counters on one or both channels with no outputs, in rate sampling mode for incremental or quadrature encoders

When the counter configuration includes outputs, each can be triggered by a setpoint or by a programmable count value less than the setpoint in upcount/downcount operations. Each of the outputs can be configured as follows:

- Output latched on at setpoint
- Output latched on at final count value
- Output timed on at setpoint, with a time range of 0…16,383 ms (only one of the four outputs can be configured in this mode)
- Output timed on at final count value, with a time range of 0…16,383 ms (only one of the four outputs can be configured in this mode)

Modicon Quantum automation platform

High-speed counter modules

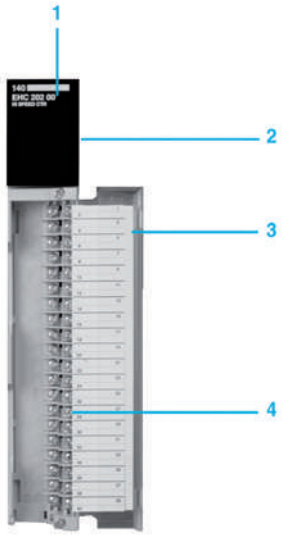

Description

The **140EHC●0●00** high-speed counter module front panel comprises:

1 Type and colour code
2 A display block with LED indicators
3 Removable, hinged door and customizable identification label, to be ordered separately
4 Screw connection block (40-way) **140XTS00200**, **140XTS00100**, to be ordered separately

References

Description	Safety	Reference	Weight kg/*lb*
Counter module, 5 channels of 100 kHz max.	–	**140EHC10500**	0.350/ *0.772*
Counter module, 2 channels of 500 kHz max.	–	**140EHC20200**	0.350/ *0.772*
40-way terminal block, degree of protection less than IP 20	Non-interfering	**140XTS00200**	0.150/ *0.331*
40-way terminal block, degree of protection IP 20	Non-interfering	**140XTS00100**	0.150/ *0.331*

4

Modicon Quantum automation platform

High-speed input interrupt module

Presentation

The **140HLI34000** high-speed input interrupt module is a multipurpose, high-performance device that combines latch and interrupt capabilities for use in time-critical applications. It can only be used in the local rack, not in remote or distributed racks.
This module has 16 individually programmable 24 V ⎓ inputs (positive or negative logic). When it is programmed in LL984 language, the module benefits from several special interrupt-handling instructions (IMOD, ITMR, IE, ID and BMDI) and an immediate I/O access (IMIO) instruction to update its I/O asynchronously with respect to normal I/O scanning. The inputs are also updated at the end of the program segment as part of the normal logic solving process.

The **140HLI34000** module is channel-configurable to any of the following modes:
- MOD interrupt handling mode
- Latch mode
- High-speed input mode

Functions

IMOD interrupt mode

In IMOD interrupt mode, a physical real-world interrupt signal will stop the CPU from executing the main application program and activate a subroutine called an interrupt handler. Interrupt data coming to the CPU is taken into account almost instantaneously. Handshaking on the local rack guarantees that the interrupt data will be taken into account.

Each input can be configured to cause an interrupt whenever it changes to state 1, state 0 or both. Multiple interrupts on the same local rack are priority-handled in the following manner:

- If two interrupts on two different **140HLI34000** modules in the same local rack generate interrupts simultaneously, the slot position in the rack determines its priority. An interrupt from the module in slot 3 therefore has priority over an interrupt generated by the module in slots 4…16.
- If two interrupts from the same **140HLI34000** module are generated simultaneously, the number of the input generating the interrupts determines their priority. An interrupt generated by input No. 1 will therefore have priority over all other interrupts.
- If an interrupt occurs while another interrupt handler is running, the CPU will take the new interrupt into account, end the current interrupt handler, then handle the new interrupt as a matter of priority.

Latch mode

A latching signal is guaranteed to be read by the CPU, at which time it automatically unlatches the input signal. In latch mode, the **140HLI34000** module can latch/unlatch inputs on a rising or falling edge. The inputs cannot generate interrupts in latch mode.

The latching mechanism is used in applications where the input signal pulse duration is shorter than the CPU's scan time. Data from latched inputs is taken into account by the process during I/O updating, with no special user programming required.

If a **140HLI34000** module has been configured in split mode (where some inputs are latched and others are used for interrupts), any latched input data is read and reset when the interrupt is taken into account and may not be valid at the end of the scan. In order to latch an input at state 1, the signal pulse must be at least 30 µs long. In order to latch an input at state 0, the signal pulse must be at least 130 µs long.

Functions (continued)

High-speed input mode

When an input on the **140HLI34000** module has not been configured as an interrupt or a latch, it can operate as a normal high-speed input (this is the default operating mode for all inputs on the module).

The high-speed input data is taken into account by the normal I/O handling process and is updated at the end of a program segment. These inputs are often considered as auxiliary process inputs for interrupt operations that require a combination of interrupts, latches and high-speed inputs. Response times for high-speed inputs are 30 µs from off to on and 130 µs from on to off.

Interrupts

Time-based interrupts

Another form of interrupt processing available as standard on Quantum can be accomplished by using the CPU's internal clock to generate interrupt signals at regular intervals (this method does not require the use of the 140HLI34000 module). The interrupt timing is user-programmable.

These interrupts can be used when the application program needs to take account of data events at predictable or regular intervals and this process lasts less than the CPU's scan time.
Timer interrupts can be programmed down to 1 ms minimum, corresponding to the CPU clock speed (see below for the impact of interrupts on the scan time).

Performance

Impact of interrupts on the scan time

For most applications, the impact of interrupt handlers on the scan time is minimal, even when interrupts are generated several times during the scan. Interrupt handlers allow a critical part of the application to be taken into account faster than the overall application. However, take care not to overtax the CPU's capacity by taking account of interrupts. We recommend that you create a timing diagram to ensure that interrupts do not consume more than 40% of the CPU's processing time. The percentage of CPU usage (the time required to take account of an interrupt) is critical to analyzing the impact on the scan time.

General performance

Interrupt handler performance is measured from the time the input signal arrives at the input module to the time an output is commanded to change state. The measurement takes account of module filter times and the time for taking account of and handling interrupts.

References

Description	Number of channels	Functions	Safety	Reference	Weight kg/*lb*
High-speed input interrupt module	16 x 24 V ⎓ inputs	Interrupts, latching, high-speed inputs	–	**140HLI34000**	–

Modicon Quantum automation platform

Accurate time stamping

Multifunction input module

Presentation

The **140ERT85420** multifunction input module is designed for time and date stamped event logging applications. It is suitable for combining time and date stamping with variations of discrete inputs quickly and accurately.

This module can also be used for counting operations (maximum frequency of 500 Hz) on its discrete inputs.
It is designed for the following areas of application:
- Status monitoring on discrete inputs
- Time and date stamped event logging
- Counting

The **140ERT85420** multifunction input module offers the PLC application an image of an external precision clock, relayed to this module. The user can use this date/time information for the following areas of application:
- Periodic time and date stamping of process values
- Time-based tables

The processor module's internal clock can also be used to synchronize the time independently.

Operation

For the **140ERT85420** multifunction input module, the information, time and date stamped in real time, made available to the application or used to operate event logging, is generated from a DCF signal, supplied by an external time receiver.

The GPS signal indicates Greenwich Mean Time, broadcast by GPS satellites. This date/time information is converted to DCF format by an external time receiver.

IRIG-B (Inter Range Instrumentation Group) is a widely used standard enabling coding and transmission of the time and date stamping via serial link.

The DCF signal indicates Central European Time. It is broadcast on long wave by a transmitter located near Frankfurt. This date/time information is captured and transmitted in the form of a DCF signal by an external time receiver.

The **140ERT85420** multifunction input module is a module with 32 discrete inputs, 24 V to 125 V ⎓, integrating the following functions:
- **Discrete inputs**: Scanned inputs transferred cyclically to the PLC program
- **Event-triggered inputs**:
  - Time and date stamped event logs on a FIFO memory buffer, integrated in the card, which can contain 4096 of these time and date stamped events concurrently
  - Validation by the user of transmission of these time and date stamped events to the PLC memory, checked by the application program
- **Counter inputs**: Counting on 32 event bits appearing at a maximum frequency of 500 Hz. Cyclical transfer of these counter values to the PLC memory
- **Periodic time and date stamping** of process values and logging of counter values according to the stated time intervals
- **Time-based tables**: Special actions on the process actuators depending on the time. States consecutive to these actions can be logged by the multifunction input module

Up to nine **140ERT85420** multifunction input modules can be installed on the same rack, local or remote.

Modicon Quantum automation platform

Accurate time stamping

Multifunction input module

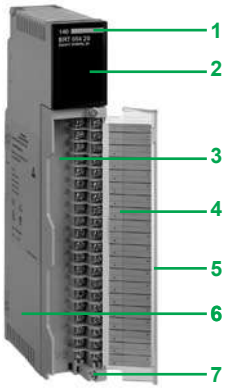

Description

The **140ERT85420** multifunction input module front panel comprises:

1 Module number and colour code
2 A display block with 35 LEDs:
- Status LEDs for the 32 discrete inputs (**1** to **32**)
- **R** (green): Self-test OK, module ready
- **Active** (green): Communication on the bus
- **F** (red): Fault

3 A connection block for the discrete inputs
4 An identification label (slipped inside the module door)
5 An access flap for the terminal block
6 A standard Quantum module casing
7 A module fixing screw

To be ordered separately:
- A 40-way screw connection block **140XTS00200**
- A backup battery holder (optional) **140XCP90000** for storing, in the event of a power cut, time and date stamped events logged in the internal buffers of the **140ERT85420** multifunction input modules (a module has one Quantum-format slot per rack)

References

Module

Description	Functions	Safety	Reference	Weight kg/*lb*
Multifunction input module	32 discrete inputs, supplied at between 24 V and 125 V ⎓ Status logging 500 Hz counting 1 clock signal inputs	Non-interfering	**140ERT85420**	0.450/ *0.992*

Separate parts

Description	Functions	Safety	Reference	Weight kg/*lb*
Screw connection block (40-way)	Connection of the 140ERT85420 module inputs	Non-interfering	**140XTS00200**	–
Backup battery holder module	For backing up logs operated by 140ERT85420 module(s)	–	**140XCP90000**	–

4

Modicon Quantum automation platform

Quantum-Sy/Max integration

Presentation

Integration solutions

Quantum-Sy/Max integration products are designed to help Sy/Max users gradually upgrade their installations to Quantum control systems at a comfortable and cost-effective pace. These products allow users to protect their investments in communication networks, application programs, I/O installations and training.
They allow Sy/Max users to move gradually toward Quantum where they can take advantage of:

- Structured programming with Unity Pro
- Faster execution times and larger CPU memory sizes
- More flexibility in terms of network choices, including Modbus, Modbus Plus, TCP/IP Ethernet, Quantum remote I/O (RIO)
- High availability offer: Hot Standby
- A wide variety of choices from our Collaborative Automation Partners

Upgrading strategies

Upgrading Sy/Max CPUs
Schneider Electric offers a conversion service for Sy/Max application programs to 984 ladder logic. These conversions include comments and header files, as well as the application program. The LL984 language is now available in the Unity Pro software from version 7.0 upwards.

Upgrading Sy/Max I/O networks
A remote I/O adaptor **8030CRM931** can be placed in slot 1 of a Sy/Max drop. This adaptor enables Class 8030 discrete intelligent I/O in that drop to operate under the control of a Quantum CPU (over the RIO coaxial cable network). The **8030CRM931** adaptor module can reside in any Class 8030 Type RRK-100, -200 or -300 register rack or any Class 8030 Type HRK-100, -150 or -200 Boolean rack.

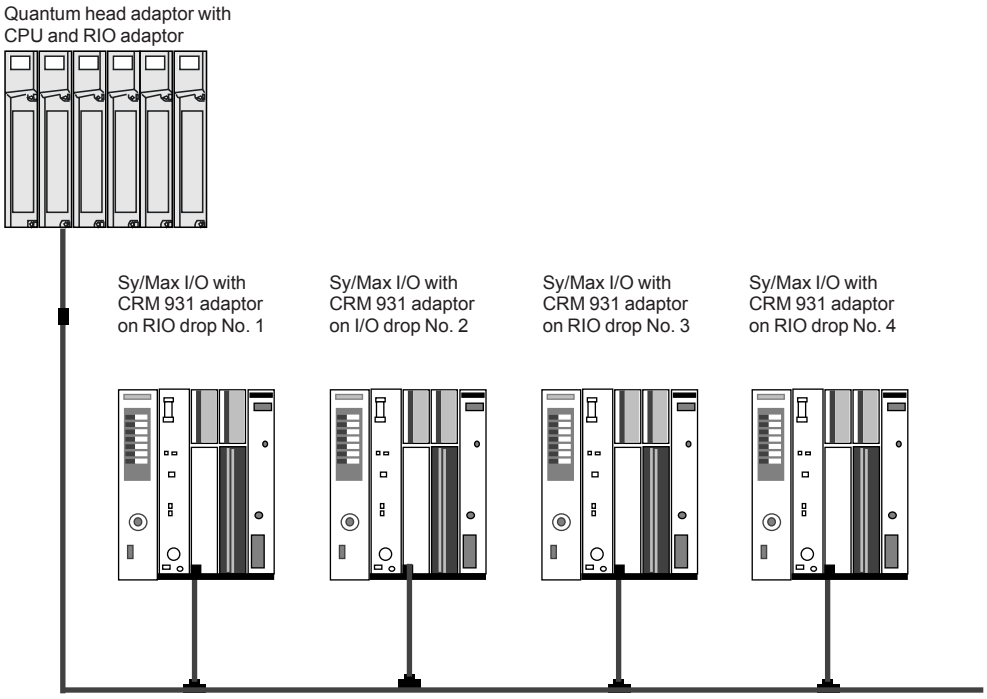

The original Sy/Max I/O wiring remains intact. Because the I/O is now on a Quantum RIO network, they can take advantage of its 1.544 Mbps data transfer rate with 16-bit CRC.

Each I/O drop has 128 addressable registers (64 inputs and 64 outputs).

Presentation (continued)

Upgrading strategies (continued)

Upgrading Sy/Max communication networks

The **NWBM85Y422** Modbus Plus-to-Sy/Max gateway provides a bridge for data exchange between Sy/Max or PowerLogic® systems and a Modbus Plus local area network. Modbus Plus gives the system connectivity to many HMI and motion control products, as well as small distributed PLCs. The **NWBM85Y422** gateway supports the following protocols:

- Sy/Max point-to-point
- Sy/Max net-to-net
- PowerLogic NIM

The gateway has one Modbus Plus port and four configurable (RS 422) ports for direct connection to Sy/Max devices. Each RS 422 port supports communications from 300 to 14.4 Kbps. DIP switch settings determine the gateway's mode of operation: Configuration mode or protocol conversion mode. Configuration mode allows you to program communication parameters (speed and time-out values, for example) and store them in the gateway's Flash memory. The gateway parameters can be set in one of three ways using:

- An ASCII terminal or a PC with a terminal emulation program on serial port No. 1
- 984LL (MSTR) language instructions
- With Sy/Max TREAD or TWRTE instructions via serial ports No. 2, 3 or 4

An MEB Modbus Plus-to-Sy/Max NIM module is also available from our partner Niobrara R&D Corporation. This module fits in a Sy/Max RRK rack. It exchanges data between an existing Sy/Max network and a Modbus Plus network. Visit Niobrara's web site (www.niobrara.com) for more information.

4

References

Description	Connection type	Safety	Reference	Weight kg/*lb*
Adaptor module for Sy/Max drop on Quantum RIO network		–	**8030CRM931**	–
Modbus Plus-to-Sy/Max NIM gateway		–	**NWBM85Y422**	–
Modbus Plus-to-Sy/Max Niobrara NIM gateway module	Ethernet BNC, 2 RS 485 ports	–	**MEBTCPD** *(1)*	–
	Ethernet 10BASE-T 2 RS 485 ports	–	**MEBTCPT** *(1)*	–

(1) To order this product, consult our partner Niobrara (Collaborative Automation Partner Program): www.niobrara.com

Contents

5 - Communication

Networks and buses selection guide . . . . . *page 5/2*

PlantStruxure Ethernet Architectures

- **Architecture** ..... *page 5/6*
- **Industrial Ethernet communication services**
  - Presentation ..... *page 5/8*
  - Functions ..... *page 5/9*
- **Module communication capabality** ..... *page 5/14*
- **Performance** ..... *page 5/16*

Web servers and gateways selection guide . . . . . *page 5/22*

- **Factory Cast Web servers and gateways**
  - Presentation ..... *page 5/24*
  - Product selection ..... *page 5/25*
- **Modicon PLC Standard Web services**
  - Functions ..... *page 5/26*
- **FactoryCast configurable Web services**
  - Functions ..... *page 5/28*
- **FactoryCast HMI active Web services**
  - Presentation ..... *page 5/30*
  - Functions ..... *page 5/33*
- **SOAP/XML Web services**
  - Presentation, functions ..... *page 5/36*
- **Ethernet DIO NOC module**
  - Presentation, description ..... *page 5/38*
  - References ..... *page 5/39*
- **Ethernet/IP and Modbus/TCP network module**
  - Presentation, functions, description ..... *page 5/39*
- **CPUs with integrated Ethernet port**
  - Presentation, description, references ..... *page 5/40*

AS-Interface bus

- **Master module for Modicon Quantum PLCs**
  - Presentation, description, ... *page 5/42*
  - References ..... *page 5/43*

Other buses and networks

- **Modbus Plus network**
  - Presentation ..... *page 5/44*
  - Application services ..... *page 5/46*
  - Optical fibre ..... *page 5/47*
  - I/O architecture ..... *page 5/48*
  - Connection ..... *page 5/49*
  - Description ..... *page 5/51*
  - References ..... *page 5/52*
- **Profibus Remote Master module**
  - Presentation ..... *page 5/54*
  - References ..... *page 5/55*

5

Serial links

- **Asynchronous serial link module**

- Presentation, description ..... *page 5/56*
- References ..... *page 5/57*

5

Modicon Quantum automation platform

Networks and buses

Type of network and bus			Ethernet Modbus/TCP	EtherNet/IP and Modbus/TCP	
Structure	Physical interface		10BASE-T/100BASE-TX (copper cable)		
	Access method		CSMA-CD		
	Data rate		10/100 Mbps with automatic recognition	10/100 Mbps	
	Medium		Double shielded twisted pair cable		
Transparent Ready services	Class		B30	–	–
	Standard Web server		Rack Viewer access to the product description and status and to the PLC diagnostics Data Editor access to the configuration functions and variables		
	FactoryCast configurable Web server	Web page editor	–		
		Hosting of user Web pages	–		
	FactoryCast HMI active Web server		–		
	Ethernet TCP/IP standard communication services		Modbus TCP messaging (reading/writing of data words)	EtherNet/IP and Modbus TCP messaging	
	Ethernet TCP/IP advanced communication services	I/O Scanning	Yes (between 128 stations)	Yes	
		Global Data	Yes	–	
		FDR client/server	FDR client *(2)*	FDR server *(2)*	
		NTP time synchronization	–	–	Yes
		SMTP e-mail notification	Yes	–	
		SNMP network management	Yes		
		Bandwidth management	Yes	–	Yes
		Quality Of Service (QoS)	–	Yes	
		IP routing function	–		
Redundancy service (compatible with Hot Standby redundant architecture)			–	–	Yes
Compatibility	CPU		–	Unity Pro CPU	140CPU6●●●●
	Software		Unity Pro		
Bus current required			*(3)*	500 mA	425 mA
Functional safety certification			–		
Module type			**140CPU65●●●** 1 integrated port	**140NOC77101**	**140NOC78000**
Pages			1/2 and 1/3	5/39	

(1) Only one Ethernet port can be used at a time.
(2) Automatic assignment of IP address and network parameters.

EtherNet/IP and Modbus/TCP	Ethernet Modbus/TCP		
10BASE-T/100BASE-TX/1000BASE-T	10BASE-T/100BASE-TX (copper cable) and 10BASE-FX (optical fibre cable) *(1)*		
CSMA-CD			
10/100/1000 Mbps	10/100 Mbps (copper cable) 100 Mbps (optical fibre cable)		
Double shielded twisted pair cable	Double shielded twisted pair cable Optical fibre cable		
–	B30	C30	D10
Rack Viewer access to the product description and status and to the PLC diagnostics Data Editor access to the configuration functions and variables			
–		Yes	
–		Yes (8 MB)	
–			Yes
EtherNet/IP and Modbus TCP messaging	Modbus TCP messaging (reading/writing of data words)		
Yes	Yes (between 128 stations)		–
–	Yes		–
FDR server *(2)*			–
Yes	–	Yes	–
Yes			–
Yes			SNMP agent
Yes			–
Yes	–		
Yes	–		
Yes			–
140CPU6●●●●	All CPUs		
Unity Pro			
600 mA	750 mA		900 mA
	–	Non-interfering	–
140NOC78100	**140NOE77101**	**140NOE77111**	**140NWM10000**
5/39	5/41		

(3) See page 1/2 and 1/3.

Modicon Quantum automation platform

Networks and buses

Type of network and bus		Modbus Plus network	AS-Interface actuator/ sensor bus	Modbus SL bus
Structure	Physical interface	Single or redundant copper cable Optical fibre	2-wire unshielded cable	Single copper cable
	Access method	Token ring	Master/slave, M2 profile (AS-Interface V1)	Master/slave
	Data rate	1 Mbps	167 Kbps	19.2 Kbps
	Medium	Twisted pair	Ribbon cable	Shielded twisted pair
Conformity class		–		
Transparent Ready services	Standard Web server	–		
	Ethernet TCP/IP standard communication services	–		
Communication services		■ Reading/writing of variables ■ Global Data service ■ Peer Cop service ■ Distributed I/O (DIO) service	■ Standard addressing with 31 slaves (4 discrete inputs/ 4 discrete outputs) ■ Local diagnostics (slave devices, channel status, etc.)	Slave Modbus protocol: ■ Reading/writing of PLC variables ■ Programming ■ Download ■ 1 or 2 RS 232/485 ports depending on the model Modbus master protocol: ■ Max. 247 slaves
Compatibility	CPU	All CPUs		
	Software	Unity Pro		
Bus current required		1300…3800 mA depending on 140CPU model 780 mA for 140NOM	250 mA	1300…3800 mA depending on 140CPU model 780 mA for 140NOM
External power supply		–		
Functional safety certification		–		
Module type		**140CPU** 1 integrated port **140NOM2●●00**	**140EIA92100**	**140CPU** 1 or 2 integrated ports **140NOM2●●00**
Pages		1/2	5/43	1/2

Asynchronous serial links	Profibus DP V1 and Profibus PA buses	
	Ethernet Modbus/TCP ports	Profibus DP V1 and Profibus PA ports (via gateway)
2 non-isolated RS 232 channels	10BASE-T/100BASE-TX (two RJ45 ports, supporting daisy chain topology)	Isolated RS 485 (one 9-way female SUB-D connector)
–	CSMA-CD	Master/slave
19.2 Kbps	10/100 Mbps	9.6 Kbps...12 Mbps
Shielded cable	CAT 5E double shielded twisted pair cable (straight-through or crossover)	Shielded twisted pair cable
–	Transparent Ready Class A20	Class 1 and Class 2
–	No Web server	–
–	Modbus TCP messaging (reading/writing data words)	Cyclic and acyclic data exchange with slaves
■ Reading/writing of ASCII sequences, 7 or 8 bits, controlled by PLC application program ■ Application of message formats to character strings ■ Integrated command interpreter	■ Modbus server scanned by the PLC ■ FDR service ■ SNMP agent network management service	■ Master/slave communication ■ Global Control service ■ Acyclic communication (read/write) in Class 1 and Class 2 ■ Support for extended diagnostics ■ Auto-scanning service of slaves on the bus
All CPUs	All Unity Pro CPUs	
Unity Pro		
300 mA	150 mA (on external power supply)	
–	18...30 V ⎓	
–		
140ESI06210	**TCSEGPA23F14F**	
5/57	5/55	

Modicon Quantum automation platform

PlantStruxure Ethernet Architectures

Logical communication architecture

Logical communication architecture

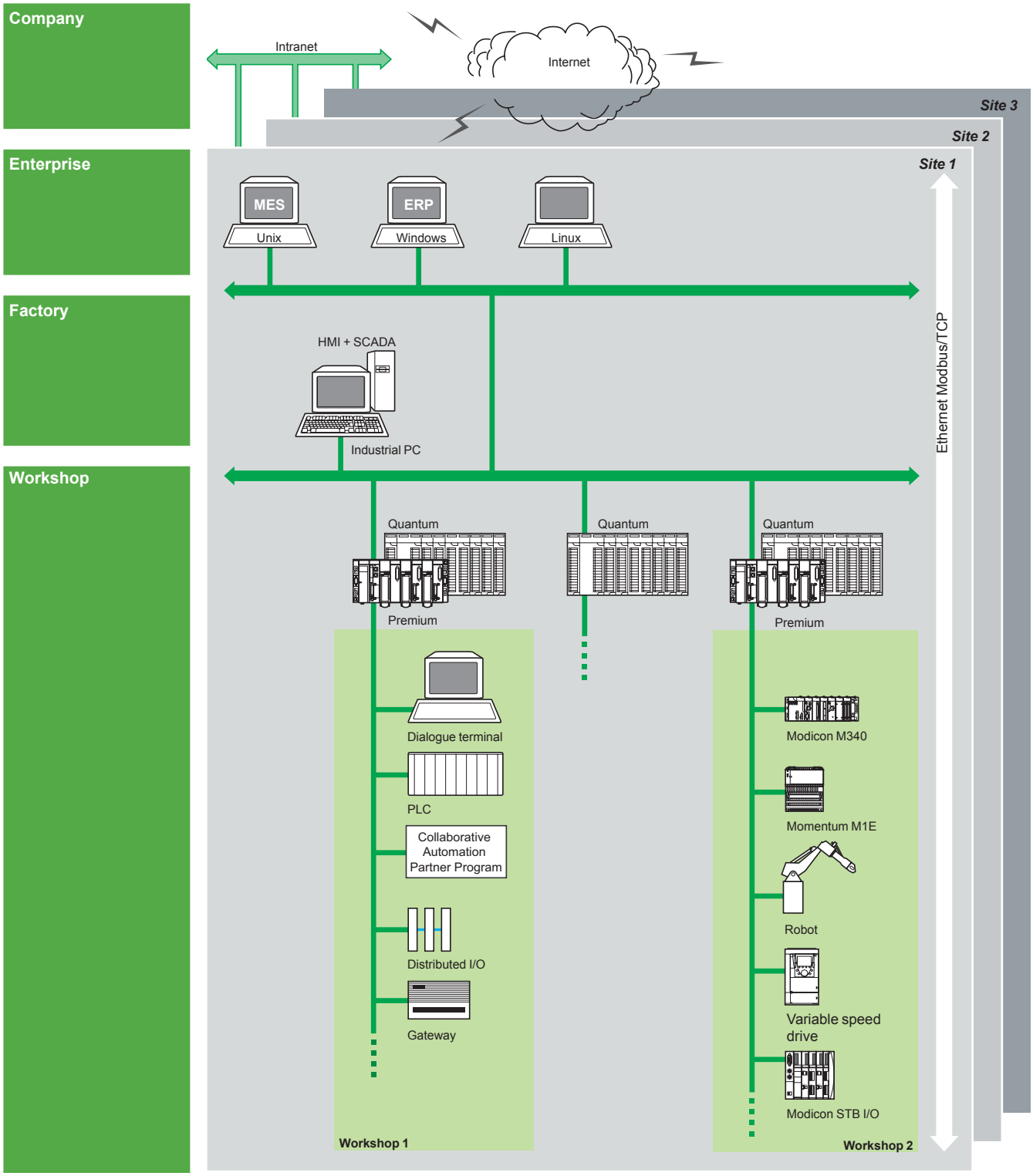

MES: Manufacturing Execution System (production management system)
ERP: Enterprise Resource Planning (integrated management software packages)
IHM/SCADA: Human/Machine Interface and Supervision Control And Data Acquisition
Gateway: Gateway to sensor/actuator bus, to installed base network, fieldbus, etc.

Modicon Quantum automation platform

PlantStruxure Ethernet Architectures

Physical communication architecture

Physical communication architecture

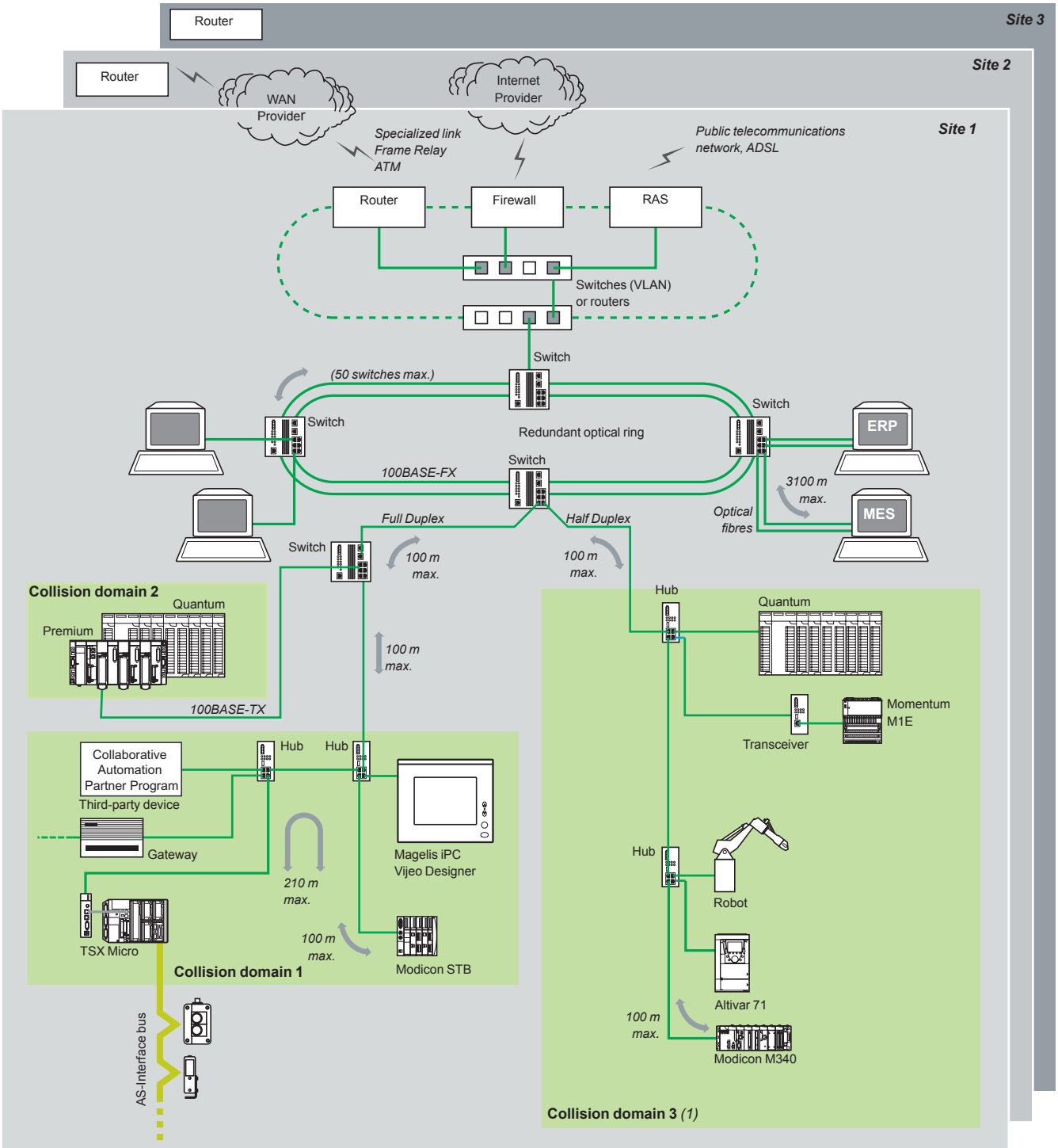

(1) As a general rule, defining several collision domains can increase the size of the architecture and improve performance.

Modicon Quantum automation platform

PlantStruxure Ethernet Architectures

Industrial Ethernet communication services

Presentation

PlantStruxure Ethernet architectures provide transparent communication services to the entire operation through the implementation of standard, unmodified Ethernet protocols and services.

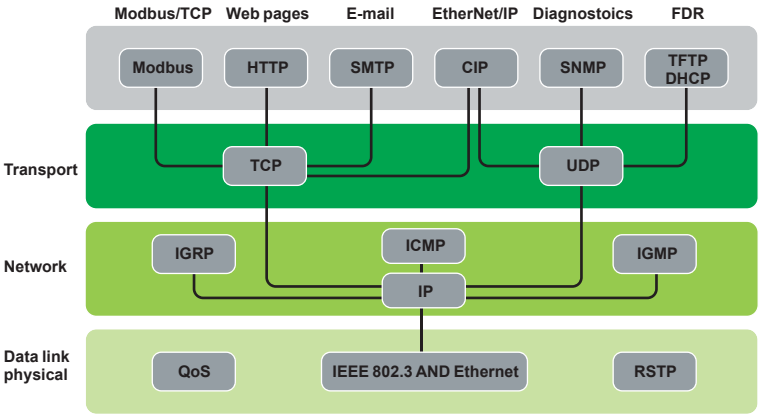

In addition to the typical Ethernet services (HTTP, BOOTP, DHCP, etc) Ethernet communication modules are equipped with automation-specific services, such as:

- Device scanning using Modbus TCP and EtherNet/IP
- Messaging using Modbus TCP and EtherNet/IP
- Automatic replacement device configuration using FDR (Fast Device replacement)
- Extensive diagnostics through SNMP
- Clock synchronization using NTP
- E-mail alarm notification via SMTP
- Packet prioritization using QoS
- Ring topology redundancy through RSTP

Note: *The above services may not be offered in all devices. Please refer to the Selection Guide and Reference pages for a comprehensive list of the services offered by each device.*

Modicon Quantum automation platform

PlantStruxure Ethernet Architectures

Industrial Ethernet communication services

Functions

Ethernet basic services

HTTP (RFC 1945)

HTTP *(HyperText Transfer Protocol)* is used to transmit Web pages between a server and a browser. HTTP has been used on the Web since 1990. Web servers embedded in Schneider Electric automation products provide easy Access product information and diagnostics from anywhere in the network.

BOOTP/DHCP (RFC1531)

BOOTP/DHCP is used to provide devices with IP parameters automatically. This avoids having to manage each device address individually by transferring this management to a dedicated IP address server.
The DHCP protocol *(Dynamic Host Configuration Protocol)* is used to assign configuration parameters to devices automatically. DHCP is an extension of BOOTP.

Schneider Electric devices can be:
- BOOTP clients, allowing the IP address to be retrieved automatically from a server, or
- BOOTP servers, allowing the device to distribute IP addresses to the network stations.

FTP *(File Transfer Protocol)* & TFTP *(Trivial File Transfer Protocol)* (RFCs 959, 2228, and 2640)

File Transfer Protocols such as FTP and TFTP provide the basic elements for file sharing. In an automation device, FTP or TFTP are often used to deliver firmware updates

NTP (Network Time Protocol) (RFC 1305)

NTP *(Network Time Protocol)* is used to synchronize the time of a client or server device from a time server.

SMTP (Simple Mail Transfer Protocol) (RFC 0821)

SMTP (Simple Mail Transfer Protocol) is an e-mail transmission service. It is used to send e-mail between a sender and a recipient via an SMTP email server.

SNMP *(Simple Network Management Protocol)* (RFCs 1155, 1156 and 1157)

Simple Network Management Protocol (SNMP) is a Internet protocol used to manage IP based network devices. SNMP is used to:
Monitor network components such as computer workstations, routers, switches, bridges and end devices to view their status.
Obtain statistics about the network such as bandwidth utilization and network errors
Change information in the device SNMP database such as when to report a high temperature condition.
SNMP is comprised of a network manager (usually running on a computer) and agents (running on the network devices). Network Management Systems (NMS) are software applications used to manage SNMP managed devices.

QoS (*Quality of Service)* (RFC 2474)

QoS provides the ability to mark or “tag” packets of a specific type or origin so that in a congested network, the switches will give higher priority to the most important packets.

RSTP *(Rapid Spanning Tree Protocol)*

RSTP has been implemented in Schneider Electric automation products to allow multi-port devices to be connected in ring configurations.
RSTP prevents the formation of broadcast storms and monitors the state of the ring. Should a link in the ring become disconnected, the protocol routes packets in a different direction to ensure continuity of service.

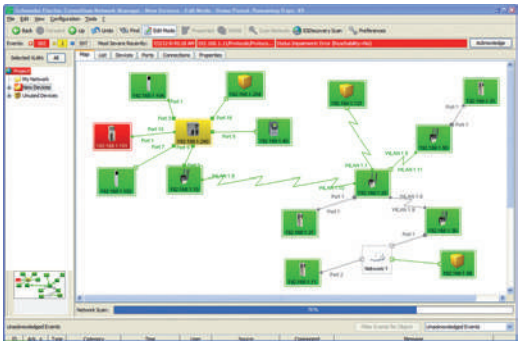

Network Management software application

Schneider Electric offers a Network Management software application tailored for the industrial control environment. ConneXium Network Manager has been developed with the Automation and Controls professional in mind. ConneXium Network Manager provides a window in network equipment operation to help improve plant productivity. The software can be used to:
- Discover network devices and generate a network map.
- Set network performance thresholds and alert on issues to prevent downtime
- Manage ports (multiple ports at once)
- Baseline network performance
- Document the network
- Generate a report to send to technical support
- Interface to SCADA via the built-in OPC server
- The software is compatible with third party as well as Schneider Electric network devices.

Modicon Quantum automation platform

PlantStruxure Ethernet Architectures

Industrial Ethernet communication services

Modbus/TCP function codes		dec	hex
Bit access	Read n input bits	02	02
	Read n output bits	01	01
	Read exception status	07	07
	Write 1 output bit	05	05
	Write n output bits	15	0F
	Read 1 input word	04	04
	Read n input words	03	03
	Write 1 output word	06	06
	Write n output words	16	10
	Read device ID	43/14	2B/0E

Examples of Modbus/TCP function codes for accessing data and diagnostics

Functions (continued)

Modbus standard communication protocol

Modbus, the industry communication standard since 1979, has been combined with Ethernet Modbus/TCP, the medium for the Internet revolution, to form Modbus/TCP, a completely open Ethernet protocol. The development of a connection to Modbus/TCP does not require any proprietary component, nor purchase of a license.
This protocol can easily be combined with any product supporting a standard TCP/IP communication stack. The specifications can be obtained free of charge from the following website: **www.modbus.org**.

Modbus/TCP, simple and open

The Modbus application layer is very simple and universally familiar with its 9 million installed connections. Thousands of manufacturers have already implemented this protocol. Many have already developed a Modbus/TCP connection and numerous products are presently available.
The simplicity of Modbus/TCP enables any field device, such as an I/O module, to communicate on Ethernet without the need for a powerful microprocessor or a lot of internal memory.

Modbus/TCP, high-performance

Due to the simplicity of its protocol and the fast speed of 100 Mbps Ethernet, the performance of Modbus/TCP is excellent. This allows this type of network to be used in real-time applications such as I/O scanning.

Modbus/TCP, a standard

The application protocol is identical on Modbus serial link, Modbus Plus or Modbus/TCP. This means that messages can be routed from one network to the other without converting protocol.
Since Modbus is implemented on top of the TCP/IP layer, users can also benefit from IP routing enabling devices located anywhere in the world to communicate without worrying about the distance between them.
Schneider Electric offers a complete range of gateways for interconnecting a Modbus/TCP network to existing Modbus Plus or Modbus serial link networks.

The IANA organization (Internet Assigned Numbers Authority) has allocated the fixed port TCP 502 (Well known port) to the Modbus protocol. Thus Modbus has become an Internet standard.

A study by the ARC Advisory Group, a leading analyst in the automation and software sectors, shows that Modbus/TCP is the world's leading Ethernet industrial protocol in terms of units sold in 2004.

Modbus and Modbus/TCP are recognized by the IEC/EN 61158 international standard as a fieldbus. They are also compliant with the “Chinese National Standard” managed by ITEI.

Interfacing CANopen with Modbus/TCP

CiA DSP 309-2 provides standardized mapping of CANopen data for transport on Ethernet Modbus/TCP networks. The specification reserves Modbus function code 43/13 for this purpose. This function code is reserved exclusively for CANopen.

Modbus TCP/IP characteristics

Maximum size of data:
- Read: 125 words or registers
- Write: 100 words or registers

Functions (continued)

EtherNet/IP standard communication protocol

EtherNet/IP is an industrial communications protocol based on the Common Industrial Protocol (CIP) which is owned and managed by the ODVA, an international, independent standards organization **(www.odva.org).**

Standard, unmodified Ethernet

Schneider Electric added EtherNet/IP as a core network in 2007. EtherNet/IP is very similar to Modbus TCP in many aspects. In particular, it shares the same principles of standardization and interoperability. EtherNet/IP operates on the same equipment and infrastructure as Modbus TCP, and both protocols can operate simultaneously on the network at any time.

Advanced services and high performance

EtherNet/IP is built on an object-based model. Data in each EtherNet/IP device is grouped in Objects, and each device may have different types of objects, depending on the purpose of the device.

EtherNet/IP Objects

The Ethernet modules implement the standard set of objects prescribed by the ODVA. The most common objects are listed below:

Communication	Identity Object (01hex)
	Message Router Object (02hex)
	Assembly Object (04hex)
	Connection Object (05hex)
	Connection Configuration Object (F3hex)
	Connection Manager Object (06hex)
	Modbus Object (44hex)
EtherNet/IP Network	QoS Object (48hex)
	Port Object (F4hex)
	TCP/IP Interface Object (F5hex)
	Ethernet Link Object (F6hex)
Diagnostics	EtherNet/IP Interface Diagnostic Object (350hex)
	EtherNet/IP IO Scanner Diagnostic Object (351hex)
	IO Connection Diagnostic Object (352hex)
	EtherNet/IP Explicit Connection Diagnostic Object (353hex)

Modicon Quantum automation platform

PlantStruxure Ethernet Architectures

Ethernet Modbus/TCP communication services

Functions (continued)

I/O Scanning service

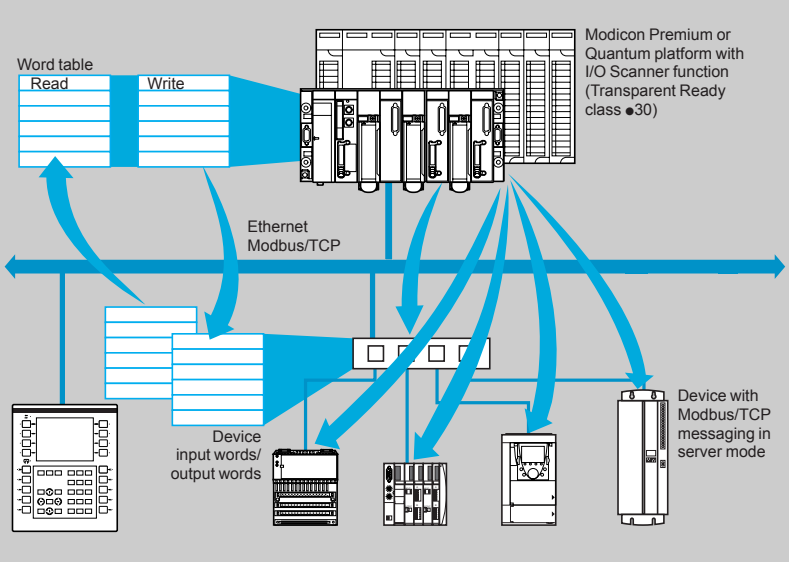

The I/O Scanning Service is used to manage the exchange of remote I/O states on the Ethernet network after simple configuration, without the need for any special programming.
I/O scanning is performed transparently by means of read/write requests according to the Modbus client/server protocol on the TCP/IP profile.
This principle of scanning via a standard protocol enables communication with any device supporting Modbus TCP messaging in server mode.
This service can be used to define:
- A %MW word zone reserved for reading inputs
- A %MW word zone reserved for writing outputs
- Refresh periods independent of the PLC scan

During operation, the module:
- Manages TCP/IP connections with each remote device
- Scans devices and copies the I/O to the configured %MW word zone
- Feeds back status words used to check that the service is working correctly from the PLC application.
- Applies pre-configured fallback values if a communication problem occurs

A range of hardware and software products is available enabling the I/O Scanning protocol to be implemented on any type of device that can be connected to the Ethernet network. Please consult the Modbus-IDA website: **www.modbus-ida.org**.

Characteristics

- Under Unity Pro software, each station can exchange a maximum of:
  - 120 write words
  - 125 read words
- Maximum size in the PLC managing the service:
  - 2 Kwords %MW in inputs and 2 Kwords %MW in outputs with manager PLC limited to 64 stations
  - 4 Kwords %MW in inputs and 4 Kwords %MW in outputs with manager PLC limited to 128 stations

I/O Scanning service diagnostics

I/O Scanning service diagnostics can be performed in one of five ways:
- Via the application program from a specific PLC data zone
- From the setup software debug screen
- From the PLC system diagnostic function displayed by means of an internet browser on a PC station
- Using standard SNMP network management software

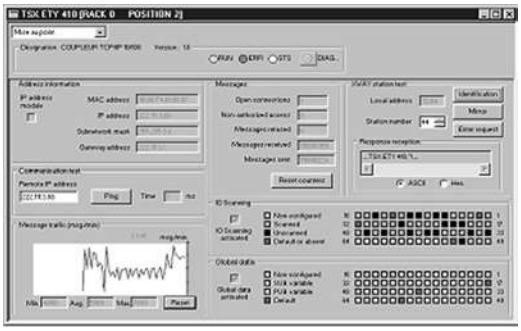

I/O Scanning service diagnostics

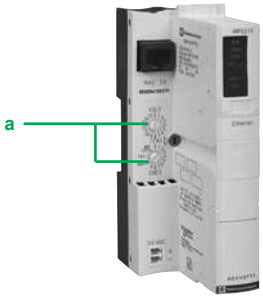

NIM network module for Modicon STB I/O

Functions (continued)

FDR *(Faulty Device Replacement)* service

The Faulty Device Replacement service uses standard address management technologies (BOOTP, DHCP) and the TFTP *(Trivial File Transfer Protocol)* file management service, with the aim of simplifying maintenance of Ethernet devices.

It is used to replace a faulty device with a new device with the guarantee that it will be detected, reconfigured and automatically restarted by the system.

The main steps in replacement are:

1. *A device using the FDR service malfunctions.*
2. *Another similar device is taken from the maintenance store, preconfigured with the Device name for the faulty device, then reinstalled on the network. Depending on the device, addressing can be performed using rotary selector switches (as for Modicon STB distributed I/O **a** or Modicon OTB for example) or can be given using the keypad integrated in the device (as for Altivar variable speed drives for example).*
3. *The FDR server detects the new device, allocates it an IP address and transfers the configuration parameters to it.*
4. *The substituted device checks that all these parameters are indeed compatible with its own characteristics and switches to operational mode.*

The FDR server can be:

- A Modicon M340 Ethernet network module, **BMXNOE0100, BMXNOE0110, BMXNOC0401**
- A Modicon M580 Ethernet module, **BMENOC0301, BMENOC0311**
- A Modicon M580 CPU **BMEP581020, BMEP582020, BMEP582040, BMEP583020, BMEP583040, BMEP584020, BMEP584040**
- A Modicon Premium Ethernet module, **TSXETY4103, TSXETY5103, TSXETC101**
- A Modicon Quantum PLC Ethernet module, **140NOE77101, 140NOE77111, 140NOC77101, 140NOC78000, 140NOC78100**
- A Modicon Premium CPU with integrated Ethernet port, **TSXP57●●●●M**
- A Modicon Quantum CPU with integrated Ethernet port, **140CPU65150, 140CPU65160, 140CPU65260, 140CPU65860**

Modicon Quantum automation platform

EtherNet/IP and Modbus/TCP

Module communication capability and performance

Feature		Capacity	Capacity	Capacity
EtherNet/IP (CIP Implicit Messaging)				
Scanner	Maximum number of devices	128 devices (125 devices as scanner + 3 devices as adapter) shared with Modbus TCP	128 devices (125 devices as scanner + 3 devices as adapter) shared with Modbus TCP	64 devices (61 devices as scanner + 3 devices as adapter) shared with Modbus TCP
	Maximum Message size	511 bytes	511 bytes	
Adapter	Maximum number of instances	3 adapter instances	3 adapter instances	
	Maxium number of connections	2 connections per instance	2 connections per instance	
	Maximum Message size	511 bytes	511 bytes	
	Inputs	507 bytes excluding header	505 bytes excluding header	
	Outputs	509 bytes excluding header	509 bytes excluding header	
Modbus TCP (Modbus Scanner)				
Maximum number of registers	Read	125	125	
	Write	120	120	
Maximum number of devices		128 devices shared with EtherNet/IP	128 devices shared with EtherNet/IP	64 devices shared with EtherNet/IP
Maximum message size	Read	250 bytes (125 words) excluding header	250 bytes (125 words) excluding header	
	Write	240 bytes (120 words) excluding header	240 bytes (120 words) excluding header	
EtherNet/IP (CIP explicit messaging)				
Client	Maximum number of simultaneous connections	16 connections	16 connections	
	Maximum number of concurrent requests	16 requests, shared with Modbus TCP	16 requests, shared with Modbus TCP	
Server	Maximum number of simultaneous connections	32 connections	32 connections	
Maximum message size		1023 bytes	1023 bytes	
Modbus TCP (Modbus explicit messaging)				
Client	Maximum number of simultaneous connections	16 connections	16 connections	
	Maximum number of concurrent requests	16 requests, shared with EtherNet/IP	16 requests, shared with EtherNet/IP	
Server	Maximim number of request that can be transferred to the CPU per scan	8 connections	12 connections	
	Maximum number of simultaneous connections	32 connections	32 connections	
Maximum message size	Read	250 bytes (125 words) excluding header	250 bytes (125 words) excluding header	
	Write	240 bytes (120 words) excluding header	240 bytes (120 words) excluding header	
Performance	EtherNet/IP traffic only	12000 packets per second	9600 packets per second	4500 packets per second
	Modbus TCP traffic only	6000 packets per second	12000 packets per second	5500 packets per second
	EtherNet/IP & Modbus TCP traffic	8000 packets per second	9100 packets per second	4500 packets per second
IP routing service		–	–	1300 packets per second
Module type		**140NOC77101**	**140NOC78000**	**140NOC78100**
Page		5/39	5/39	

Note: *The performance capacity listed here is effected by certain test conditions including input/output size, RPI (Request Packet Interval), CPU scan time. Customers may experience different results under different conditions.*

Modicon Quantum automation platform

Ethernet Modbus/TCP network

Performance

Selecting the communication architecture

When selecting an architecture, take performance into account at the earliest possible stage. To do this, the developer must:

1 Know exactly what he needs:
- quantity and type of devices to be interconnected
- volume and type of exchanges
- expected response times
- environment

2 Compare his needs with the characteristics of the offers available and be aware that the actual performance level between any 2 points in an architecture depends on the weakest link in the chain, which can be:
- dependent on the hardware
- but also dependent on the applications (size, architecture, operating system, machine power rating, etc) which are often only vaguely defined at this stage of the project

3 Work out from these which is the most suitable architecture

The purpose of the next few pages is to provide the main information and instructions needed to answer the second point. Given that the performance of an Ethernet architecture is linked to several parameters, these pages do not supply all the information needed to calculate the network performance. Their aim is to focus on the following main aspects:

- **Guidelines for calculating the network load** so as to design an Ethernet network that meets the application requirements
- **Application response time** to be obtained depending on the configuration used (see pages 5/17 to 5/19)
- **Processing capability of Modicon M340, Modicon M580, Modicon Premium and Modicon Quantum** platforms so as to be able to select the CPU and define the number of Ethernet connections required on the PLC depending on the application (see pages 5/20 and 5/21)

Calculating the network load

Introduction

When calculating the load on an Ethernet network, all the communication services of all the peripheral devices connected to the network need to be calculated.
Because of the outstanding performance of the Ethernet network, the load is often less than the Ethernet network limits and does not significantly affect the application response time. This phenomenon is explained by the high speed of the Ethernet network: the network transaction time is 10% less than the application response time. In order to ensure a low network load and avoid large theoretical calculations, it is highly advisable to separate the collision domain so as to limit the network load, using only the switched network (tree, star or daisy-chain topology).

Modicon Quantum automation platform

Ethernet Modbus/TCP network

Performance

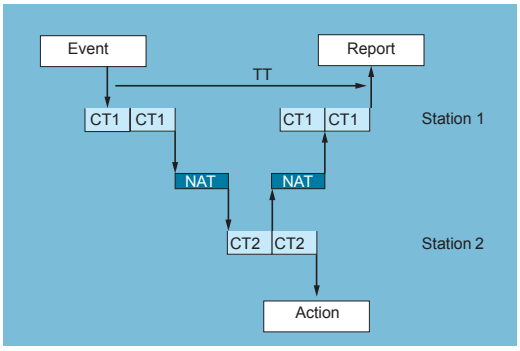

Modbus messaging service response time

Application response time

Modbus (or Uni-TE) messaging service response time

Exchanges between the PLC CPU and the Ethernet module are synchronous with the PLC scan cycle time (CT), just like the I/O exchanges. When an event occurs (such as an input being set to 1 for example), a message can be transmitted only after this input has been taken into account (start of the next cycle) and the PLC (Modicon M340, Modicon M580, Modicon Premium or Modicon Quantum) program has been executed, i.e. on average approximately 1.5 cycles after the event occurred.

The network access time (NAT) shown in the table below in ms is a total of the module transit time and the delay before the message can be transmitted on the network.

Processing Modbus TCP/IP message requests	Modicon M580 BMEP58		Modicon M580 BME	Modicon M340 BMX		Modicon Premium TSX		Modicon Quantum 140	
	1020 2020	2040 3020 3040 4020 4040	NOC03●1	NOC0401 NOE0100WS	P342020 P342030	ETY210 ETY110WS	ETC101 WMY100 P5710...5760	NOC77101/78●●● CPU113/311●● CPU434/5341●	CPU65●●● CPU67●●● NOC77101 NOC78●00
Network access time (NAT)	< 10 ms	< 10 ms	< 10 ms	< 10 ms	< 10 ms	< 25 ms	< 10 ms	< 10 ms	< 10 ms

The transaction time TT includes the delay between the transmission of a message from a client station **1**, its reception by the server station **2**, processing the request, sending back the response and it being taken into account by the station **1** (updating an output for example).
As the block diagram above shows:

- The transaction time TT will be between:

$$2 \times CT1 + 2 \times NAT < TT < 4 \times CT1 + CT2 + 2 \times NAT$$

- The average duration TT_{av} is equivalent to:

$$TT_{av} = 3 \times CT1 + 0.5 \times CT2 + 2 \times NAT$$

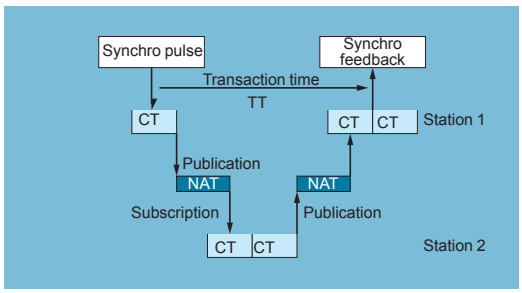

Global Data service response time

Global Data service response time

The transaction time TT includes the delay between publication of Global Data by the station **1**, its reception and processing by the remote station **2** and its retransmission to the initial station **1**:
For an exchanged variable:

- If CT < 5 ms,
  transaction time: $TT = 5 \text{ to } 6 \times CT$
- If CT ⩾ 10 ms,
  transaction time: $TT = 3 \times CT$

Modicon Quantum automation platform

Ethernet Modbus/TCP network

Performance

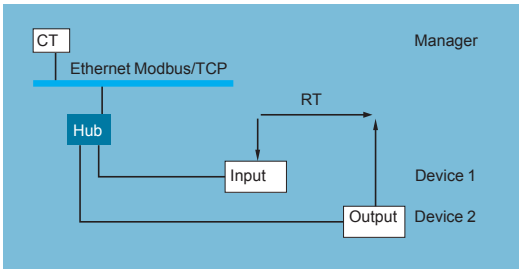

I/O Scanning service response time

Application response time (continued)

I/O Scanning service response time

The response time RT includes the time between taking account of information from a remote input and updating the state of a remote output. It includes the processing time in the PLC.

This response time RT consists of the following parameters:

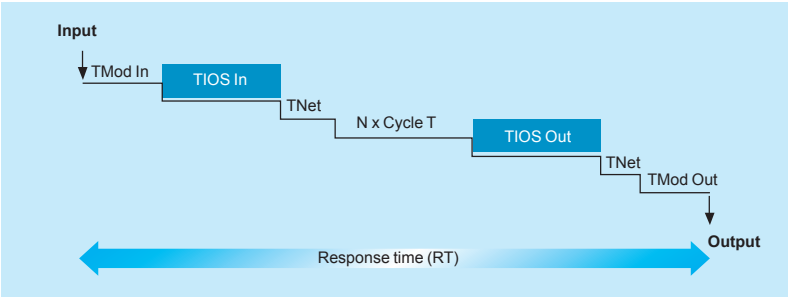

□ TMod In and TMod Out: Response time of the read/written device, excluding the electrical transition time at the input/output (TMod depends on the device, usually between 1 and 8 ms)
□ TIOS In and TIOS Out: Time between 2 read/write operations on the same device (0.3 ms x number of devices scanned), at least equivalent to the configured scan time
As TIOS is executed in parallel with the PLC cycle, it can be hidden from the viewpoint of the response time RT).
□ Cycle T: PLC scan cycle time
□ TNet: Propagation time on the network (depends on the application, but usually TNet = 0.05 ms at 10 Mbps and 0.005 ms at 100 Mbps)

The response time RT can be estimated using the following 3 formulae:

■ **RT_{min}**, minimum response time with TIOS hidden and 1 PLC scan cycle:

$$RT_{min} = (TMod\ In + 0) \times TIOS\ In + (Tnet + N) \times cycle\ T + (0 \times TIOS\ Out) + Tnet + TMod\ Out$$

■ **RT_{typic}**, typical response time with 0.5 TIOS hidden:

$$RT_{typic} = (TMod\ In + 0.5) \times TIOS\ In + (Tnet + N) \times cycle\ T + (0.5 \times TIOS\ Out) + Tnet + TMod\ Out$$

■ **RT_{max}**, maximum response time with TIOS not hidden:

$$RT_{max} = TMod\ In + TIOS\ In + (Tnet + N) \times T\ cycle + TIOS\ Out + Tnet + TMod\ Out$$

Modicon Quantum automation platform

Ethernet Modbus/TCP network

Performance

Application response time (continued)

I/O Scanning service response time (continued)

Below are the TMod In and TMod Out response times:

Type of distributed I/O	Response time	Min.	Typical	Max.
Advantys STB **STBNIP2212**	TMod In	2 ms	3 ms	4 ms
	TMod Out	2 ms	3 ms	4 ms

The TIOS In/TIOS Out times measured between 2 scan cycles (Ethernet network with switches) are shown below:

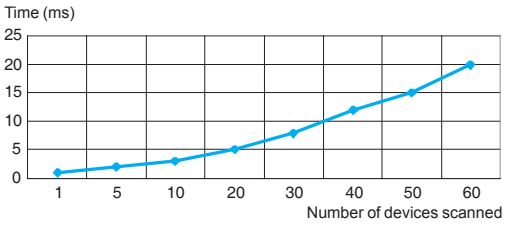

The number N of CPU scan cycles is shown below:

Number of CPU cycles N	Min.	Typical	Max.
Modicon M340 platform with **BMXNOE0100** and **BMXNOE0100H** modules	2	2.5	3
Premium platform with **TSXETY4103** and **TSXETY5103** modules			
Quantum platform with **140NOE77101** and **140NOE77111** modules			
Quantum platform with **140NOC77101** and **140NOC78●00** modules			
Modicon M340 **BMXP342020/2030** CPUs			
Premium **TSXP5726/3634M, TSXP5726/2823M** and **TSXP5736/4823AM** CPUs			
Premium **TSXP5746/56/6634M** CPUs	1	1	2
Quantum **140CPU65150/60** CPUs			

Modicon Quantum automation platform

Ethernet Modbus/TCP network

Performance

Processing capacities of Modicon platforms

Processing capacity

Use the table below to compare, for each station, the total number of messages received via the Modbus (or Uni-TE) messaging service if used (value R1, R2 or Ri) with the capacity of the station CPU.

Processing of Modbus requests per PLC scan cycle

Modicon M340, Modicon Premium/Atrium platforms		Messages received
Total messages received by the PLC from all the communication modules *(1)*	**TSX5710**	4 messages/cycle
	BMXP3420 / TSX5720	8 messages/cycle
	TSX5730	12 messages/cycle
	TSX5740	16 messages/cycle
	TSX5750/60 *(2)*	16/20 messages/cycle

Modicon Quantum platform	Integrated port limitations		Communication module limitations		Ethernet modules per PLC
	All types of communica-tion request	Additional read/write 4x registers	All types of communica-tion request	Additional read/write 4x registers	
140CPU311	–	–	1 message/ cycle	4 messages/ cycle	Up to 2
140CPU651	16 messages/ cycle	16 messages/ cycle	4 messages/ cycle	8 messages/ cycle	Up to 6

messages/cycle: *number of messages received per cycle from the PLC master task (typical cycle of 50 to 100 ms)*

Ethernet transaction processing capacity

For each station, compare the total number of messages received Σ [values Ri, Rj] and the total number of messages transmitted Σ [values Ei, Ej] (for station N, for example) with the Ethernet transaction processing capacity shown below.
Use the elements below for the Ethernet connection per PLC, rather than the number of transactions required by the application.

Ethernet transaction processing capacity	Modicon M340 BMX		Modicon Premium TSX			Modicon Quantum 140	
	NOE0100 NOE0100WS	**P342020 P342030**	**ETY210 ETY110WS**	**ETY4103/5103 WMY100 P5710/20/30/40**	**P5750 P5760**	**NOE77101/11 NWM10000**	**CPU65●●● CPU67●●●**
Modbus messaging	500 transactions/s	500 transactions/s	60 transactions/s	450 transactions/s	500 transactions/s	350 transactions/s	350 transactions/s
I/O Scanning service	2000 transactions/s	Server mode *(3)*	Service not available	2000 transactions/s *(4)*	2000 transactions/s	2000 transactions/s *(4)*	2000 transactions/s
Global Data subscription	800	Service not available	Service not available	800 *(4)*	800	800 *(4)*	800

(1) A temporary overload, due for example to an adjustment terminal or the temporary connection of an Internet browser, lasting for a few PLC scans, is permitted.
(2) Only with Unity Pro software.
(3) **BMXP3420●0** *CPUs with Modbus TCP messaging in server mode can be scanned by a device with the I/O Scanning service.*
(4) **TSXWMY100** and **140NWM10000** *modules do not have I/O Scanning and Global Data services.*

Modicon Quantum automation platform

Ethernet Modbus/TCP network

Performance

Processing capacities of Modicon platforms (continued)

Number of simultaneous TCP/IP connections

The number of simultaneous TCP/IP connections depends on the platform as well as the type of connection to the Ethernet network:
- 10/100BASE-TX port in network modules
- 10/100BASE-TX port integrated in CPUs

Number of simultaneous TCP/IP connections	Modicon M340		Modicon Premium		Modicon Quantum		
	BMXNOE0100 BMXNOE0110	BMXP342020 BMXP342030	TSXETY210 TSXETY110WS	TSXETY4103/5103 TSXWMY100 TSXP5710...5760	140NOE77101 140NOE77111	140CPU65●●● 140CPU67●●●	140NOC77101 140NOC78●00
Client	16	16	32	16 *(1)*	16 *(1)*	16 *(1)*	16
Server	32	32		64 *(1)*	64 *(1)*	64 *(1)*	32

1) With 64 TCP/IP connections maximum (cumulative total of client and server connections)

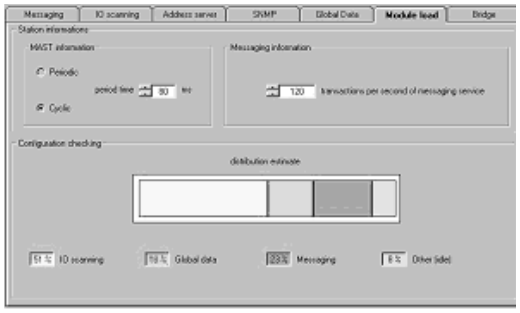

Bandwidth management

Bandwidth management for Ethernet Modbus/TCP modules

The bandwidth management service indicates the load level of the Ethernet network module. This allows the user to monitor any drift and anticipate any problems.
The Ethernet module load is indicated in one of three ways:
- Expected load in the Unity Pro/PL7 configuration screen
- Actual load in the Unity Pro/PL7 diagnostics/debug screen, as well as in the diagnostics pages via the Web. It is displayed in the form of a bar chart animated in real time
- In the SNMP interface for access by the SNMP network manager

The bandwidth is shown as a percentage for each of the following services:
- Modbus (and Uni-TE) messaging
- I/O Scanning
- Global Data
- Others

Ethernet port integrated in the CPU (for example with BMXP342020/2030 Modicon M340 CPU)

or

Dedicated Ethernet module (for example with BMXNOE0100/0110 Modicon M340 module)

Ethernet solutions with Modicon M340 platforms

Modicon platforms feature two types of connection to the Ethernet network:
- The 10/100BASE-TX port integrated in the CPUs, which also process the application and exchange data with the other modules supported by the rack and other communication ports (CANopen bus, Modbus serial link, etc)
- The 10/100BASE-TX port in dedicated Ethernet modules on which, unlike the CPU with integrated Ethernet port, all the resources are allocated to Ethernet Modbus/TCP communication

These fundamentally different hardware characteristics result in equally different capacities in terms of services and performance:
- The integrated port is a low-cost way of satisfying applications that are not too demanding in terms of communication (≤ 500 useful messages/s)
- Where there are a large number of exchanges, use of a dedicated Ethernet network module is unavoidable

Modicon M340 automation platform

Web servers and gateways

Applications		Standalone Web Gateway/Server module for remote access	
Type		FactoryCast Gateway ETG10●0	
Target products	Type	Any device supporting Modbus	Any device supporting Uni-Telway
Network/Remote access services	Remote access	Intranet or via external modem and integrated RAS function	Intranet or modem, external modem and integrated RAS function
		Remote programming, downloading via FTP, access to Web server via web browser	
	Gateway function	Ethernet to Modbus serial Modem to Modbus serial and Ethernet	Ethernet to Uni-Telway serial Modem to Uni-Telway and Ethernet
	Serial protocols	Modbus master	Uni-Telway slave
	Ethernet protocols	Modbus/TCP	Modbus/TCP Uni-TE (Premium, Micro)
	TCP/IP protocols	BootP/DHCP, DNS, SNMP agent, SMTP client, NTP client *(1)*, FTP	BootP/DHCP, DNS, SNMP agent, SMTP client, NTP client *(1)*, FTP
	Security	Protection by IP address filtering and passwords	
Web server	Characteristics	HTTP and FTP server, 8 MB memory available for user, hosting of user Web pages and documents (doc, pdf, Excel)	
Predefined services	Configuration	Via Web Designer software or predefined Web pages	
	Diagnostics	Serial device diagnostics via predefined Web pages	
	Monitoring	Monitoring via animation tables Display of PLC Unity program in a Web page	Monitoring of devices and application via animation tables (read/write variables) Display of PLC Unity program in a Web page
	Alarm management	–	
Customizable services	Graphic views	Graphic monitoring via animated views (integrated graphic editor)	
	Unity Pro operator screen	–	
	User Web pages	Graphic monitoring via animated Web pages created by the user	
Advanced and HMI services	Calculation scripts	–	
	E-mail service	Alarm notification by e-mail	
	Data logging	–	
	Database connection	–	
	Report service	–	
	Recipe service	–	
Application development software		Web Designer (supplied with each module)	
		Web Designer	
References		TSXETG1000	TSXETG1010
Catalog or website		www.schneider-electric.com	

(1) Except with TSXP57103M/153M Modicon Premium processors, which do not have the NTP service.

Standalone Web Gateway/Server modules for remote access		
FactoryCast HMI Gateway ETG30●●		
Any Modicon PLC or third-party device supporting Modbus		
Intranet or modem, external modem and integrated RAS function	Intranet or modem RTC modem and integrated RAS function	Intranet or modem GSM modem and integrated RAS function
Remote programming, downloading via FTP, access to Web server via web browser		
Ethernet to Uni-Telway serial, modem to Modbus serial and Ethernet		
Modbus master		
Modbus/TCP		
DHCP, DNS, SNMP agent, SMTP client, NTP client *(1)*, FTP		
Protection by IP address filtering and passwords		
HTTP and FTP server, 32 MB memory available for user Web pages, memory expansion using Compact Flash cards 1 GB max., hosting of user Web pages and documents (doc, pdf, Excel)		
Via Web Designer software or predefined Web pages		
Network diagnostics, serial and Ethernet device diagnostics via predefined Web pages		
Monitoring of devices and application via animation tables (read/write variables) Display of PLC Unity program in a Web page		
–		
Graphic monitoring via animated views (integrated graphic editor)		
–		
Graphic monitoring via animated Web pages created by the user		
Arithmetic and logical scripts		
Alarm notification by e-mail/SMS		
Data recorded in the module with date and time stamping (CSV files)		
Direct recording in an SQL, Oracle, or MySQL server		
Dynamic HTML report management		
Management of “Recipe” data (storage and review locally or in remote database)		
Web Designer (supplied with each module)		
Web Designer		
TSXETG3000	TSXETG3010 (PSTN modem)	TSXETG3021 (GSM900/1800 MHz band) TSXETG3022 function (GSM850/1900 MHz band)
www.schneider-electric.com		

Modicon Quantum automation platform

PlantStruxure Ethernet Architectures

FactoryCast Web servers and gateways

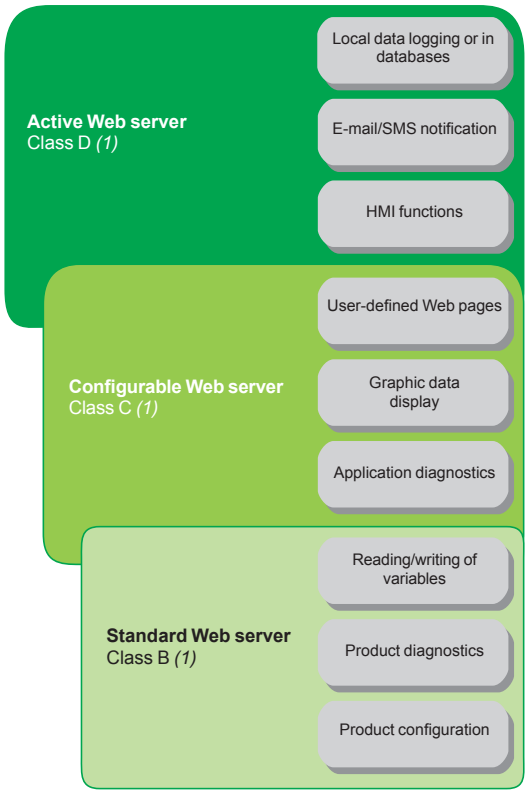

FactoryCast Web server offer

Schneider Electric offers a wide range of Transparent Ready products, such as controllers and PLCs, industrial PCs, HMI devices (2), variable speed drives, distributed I/O modules, gateways, Web servers, switches, SCADA software and inductive identification systems.

These products provide different levels of Web services and communication services on Ethernet Modbus/TCP, according to users' requirements.

Among these Transparent Ready products, FactoryCast defines a range of modules and gateways with configurable Web server combining:
- Real-time communication functions based on Ethernet Modbus/TCP
- Predefined Web pages for advanced installation diagnostics
- The capacity to host dynamic user-defined Web pages or any document (.doc, pdf, etc) designed to assist maintenance

Presentation of the Web server modules and gateways

In the Transparent Ready approach, Ethernet network modules or Web gateways integrate Ethernet Modbus/TCP services (Modbus TCP/IP messaging, SNMP network management functions, etc). They also offer, depending on the product, the following Web functions:
- Standard Web services (predefined)
- FactoryCast configurable Web services
- FactoryCast HMI active Web services

There are two ranges of configurable Web server:
- **FactoryCast Web modules for PLCs,** which are embedded in the TSX Micro, Premium, Quantum, Modicon M580 and Modicon M340 automation platforms. These modules provide transparent access to system and application diagnostic information in real time using Web technologies.
- **FactoryCast Web Gateway modules,** with all the network interfaces in one standalone unit:
  - A modem (depending on the version)
  - An RAS/Router function
  - A customizable Web server
  - HMI functions (depending on the version)

FactoryCast Gateways are a cost-effective response to requirements for remote access to customized remote diagnostics, maintenance, monitoring and control services using a simple Internet browser as well as to requirements to integrate serial installations (Modbus RTU or Uni-Telway) in an existing Ethernet Modbus/TCP infrastructure.

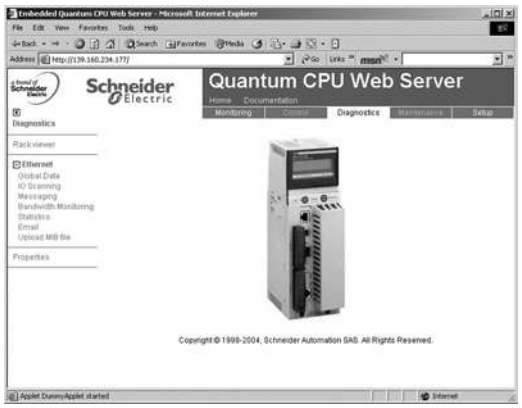

Presentation of Web services

Standard Web services

Standard Web services are integrated in the following Schneider Electric Ethernet products: automation platform CPUs and Ethernet modules, distributed I/O modules, variable speed drives and Ethernet gateways. See page 5/25.

Using a simple Internet browser, the standard Web server provides the following "ready-to-use" functions:
- Product configuration
- Remote diagnostics and maintenance of products
- Display and adjustment of products (reading/writing variables, status)

The embedded Web server is a real-time data server. All the data can be presented in the form of standard Web pages in HTML format and can therefore be accessed using any Web browser that supports the embedded Java code. The standard functions provided by the Web server are supplied "ready-to-use" and thus do not require any programming of either the PLC or the client PC device supporting a Web browser.

(1) In order to simplify their selection and ensure their interoperability within a system, each Transparent Ready product is identified by the class of services it provides. Letter A, B, C or D (level of service for the Web server) followed by 10, 20 or 30 (level of service for Ethernet communication).
(2) HMI = Human Machine Interface

Modicon Quantum automation platform

PlantStruxure Ethernet Architectures

FactoryCast Web servers and gateways

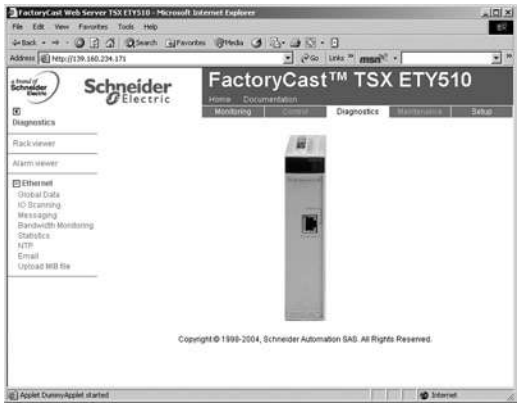

Presentation of Web services (continued)

FactoryCast configurable Web services

The configurable Web services are integrated in the following Schneider Electric Ethernet products: FactoryCast PLC modules (TSX Micro, Premium and Quantum) and FactoryCast Gateway modules.
In addition to the standard Web services, the configurable Web servers offer the following functions:
- Graphic application diagnostics (customized graphic views created by the user)
- Graphic supervision via animated Web pages created by the user and stored in the Web server module

And depending on the products:
- Management of PLC alarms (system and application) with partial or total acknowledgement ("ready-to-use" Alarm Viewer function pages)
- Open data server interface. SOAP/XML protocol, WSDL interface *(1)*

FactoryCast Web servers can also be used to customize the supervision, diagnostics or maintenance interface via Web pages defined by the user or any other document (doc, pdf, etc) hosted in the module.

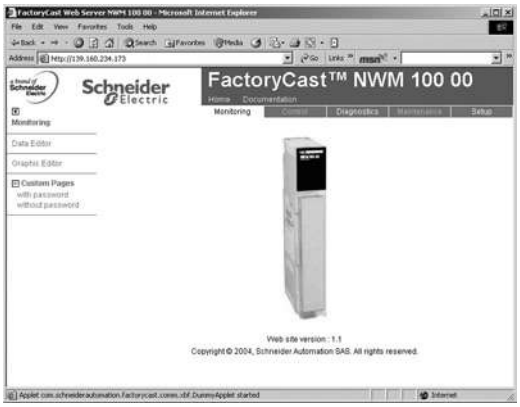

FactoryCast HMI active Web services

The active Web services are integrated in the FactoryCast HMI modules of Premium and Quantum PLCs.
In addition to the FactoryCast Web services, the FactoryCast HMI modules provide HMI functions, which are executed in the module itself:
- Real-time HMI database management, independent of the PLC CPU
- Arithmetic and logical calculations on HMI data
- Direct connectivity with relational databases (traceability)
- Data Logging: recording of data in the module
- Display of Unity Pro graphic runtime screens in the form of Web pages
- Recipe management (read/write)
- Alarm and report notification by e-mail
- Active page server, dynamic generation of animated HTML pages
- Dynamic generation of HTML reports
- Open data server interface. SOAP/XML WSDL interface protocol *(1)*

FactoryCast HMI is defined as an active Web server used to execute HMI functions without any effect on the PLC application program and therefore on its scan time.

Web server automation products

Product		Reference	Embedded Web server		
			Standard, class B20	Configurable, class C20/C30	Active, class D10
Modicon Quantum platform	CPUs	140CPU65●●●		–	
		140CPU67●●●		–	
	Modules	140NOC77101		–	
		140NOC78000		–	
		140NOC78100		–	
		140NOE77101		–	
		140NOE77111		FactoryCast	
		140NWM10000		FactoryCast	FactoryCast HMI
Modicon Premium platform	CPUs	TSXP572●23M		–	
		TSXP573623AM		–	
		TSXP574823AM		–	
		TSXP571634M		–	
		TSXP57●634M		–	
	Modules	TSXETY4103		–	
		TSXETY110WS		FactoryCast	
		TSXETY5103		FactoryCast	
		TSXWMY100		FactoryCast	FactoryCast HMI
Modicon M340 platform	Module	BMXNOE0110		FactoryCast	
Modicon TSX Micro platform	Modules	TSXETZ410		–	
		TSXETZ510		FactoryCast	
Inductel identification station		XGKS1715503		–	
FactoryCast Web Gateway		TSXETG10●0		FactoryCast	
FactoryCast HMI Web Gateway		TSXETG30●●		FactoryCast	FactoryCast HMI *(2)*

(1) Standard protocol providing interoperability with computer management applications (see page 5/36)
(2) Class D20 for **TSXETG30●●**

Modicon Quantum automation platform

PlantStruxure Ethernet Architectures

Modicon PLC standard Web services

Modicon PLC standard Web services

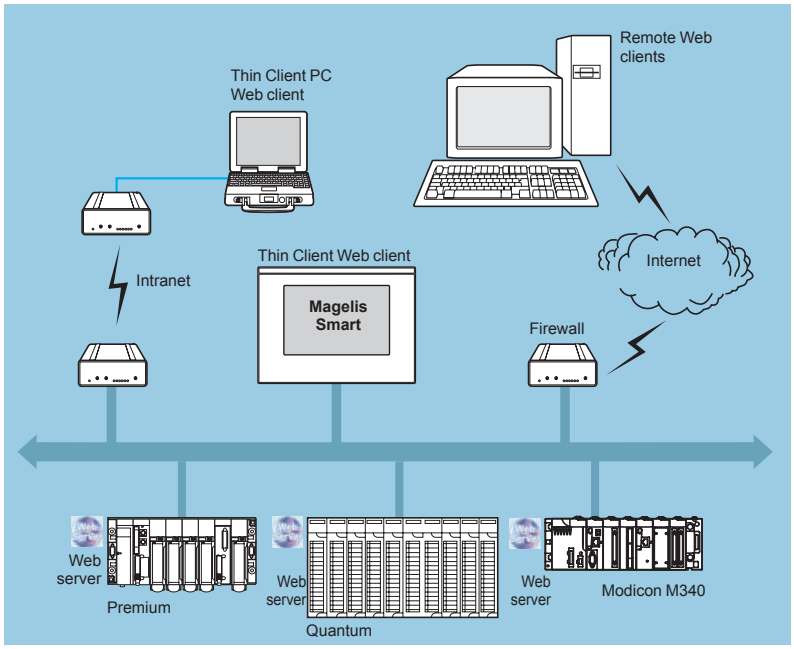

The predefined Rack Viewer PLC diagnostic function and the Data Editor read/write function are supported by all Ethernet TCP/IP modules *(1)* in the following Modicon automation platforms:

- Modicon M340 platform
- Modicon M580 platform
- TSX Micro platform
- Premium platform
- Quantum platform

See the selection of Web server products on page 5/25.

These functions can be accessed using a standard web browser connected to the network. They are “ready to use” and secure (password-protected).

They can be used locally or remotely via:

- Intranet
- A modem and RAS server
- Internet

(1) For standard Web servers integrated in variable speed drives, please consult our catalogue “Soft starters and variable speed drives”.

Modicon Quantum automation platform

PlantStruxure Ethernet Architectures

Modicon PLC standard Web services

Quantum hardware configuration

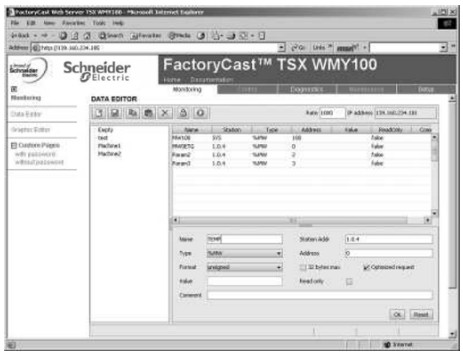

Data Editor variables table

Modicon PLC standard Web services (continued)

Rack Viewer PLC diagnostics function

The Rack Viewer function can be used for PLC system and I/O diagnostics.
It displays the following in real time:

- LED status on the front panel of the PLC
- The PLC type and version
- The hardware configuration of the PLC including the status of the system bits and words
- Detailed diagnostics of each I/O module channel or application-specific channel in the configuration
- Remote I/O drops present in the system

5

Modicon Quantum automation platform

PlantStruxure Ethernet Architectures

FactoryCast configurable Web services

FactoryCast configurable Web server

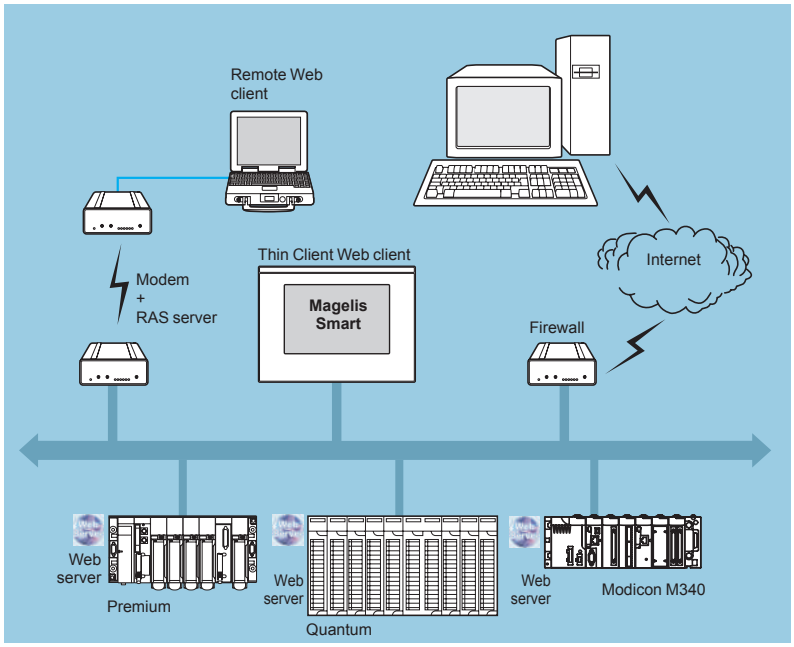

In addition to standard Web services, FactoryCast modules (see selection table on page 5/25) support the following functions:

- Alarm Viewer
- Creation and display of graphic views via an online graphics editor (Graphic Data Editor, supplied)
- Hosting and display of Web pages created by the user
- SOAP/XML server interface

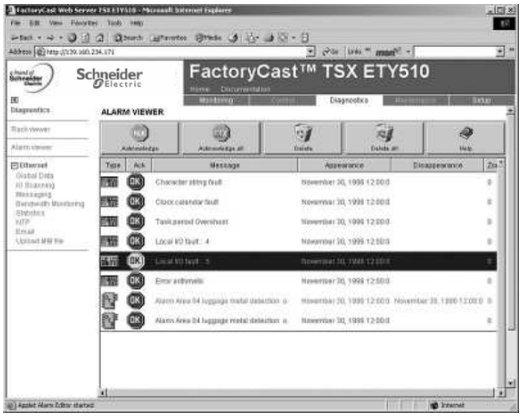

Alarm Viewer

Alarm Viewer function

The Alarm Viewer is a “ready to use”, password-protected function. It is used to process alarms (display, acknowledgement and deletion) managed at PLC level by the system or using diagnostic function blocks known as DFBs (system-specific diagnostic function blocks and application-specific diagnostic function blocks created by the user).

These alarms are stored in the PLC diagnostics buffer (specific memory area used to store all diagnostic events). This function is available with the Premium/Atrium platforms (with PL7 or Unity software) and the Quantum platform (with Unity software).

The diagnostics viewer consists of a Web page displaying a list of messages with the following information for each alarm:

- Dates and times of the appearance/disappearance of the fault
- Alarm message
- Alarm status
- Type of associated diagnostic function block (DFB)

Modicon Quantum automation platform

PlantStruxure Ethernet Architectures

FactoryCast configurable Web services

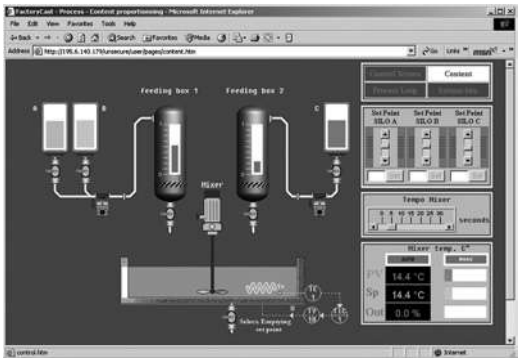

Hosting and display of user Web pages

FactoryCast configurable Web server (continued)

User Web page hosting and display function

FactoryCast Web modules have an 8 Mbyte memory *(1)* which is accessed in the same way as a hard drive and can be used to host Web pages and all user-defined documents in Word or Acrobat Reader (for example, maintenance manuals, diagrams, etc).

These Web pages can be created using any standard tool for creation and editing in HTML format. These pages can be enhanced by inserting animated graphic objects linked to PLC variables. These animated objects are created using the Graphic Data Editor supplied with FactoryCast.

Web pages created in this way can be used, for example, to:
- Display and modify all PLC variables in real time
- Create hyperlinks to other external Web servers (documentation, suppliers, etc)

This function is particularly suitable for creating graphic interfaces used for the following purposes:
- Real-time display and supervision
- Production monitoring
- Diagnostics and maintenance assistance
- Operator manuals

SOAP/XML server interface

FactoryCast modules incorporate a standard SOAP/XML data server that provides direct interoperability between automation devices and computer management applications (MES, ERP, SAP .Net application, etc). See pages 5/36.

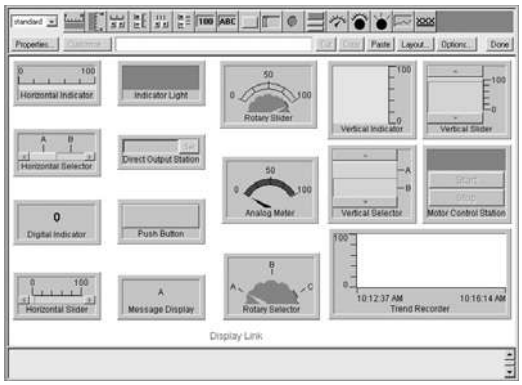

Graphic Data Editor

Graphic Data Editor function

This function can be used to create graphic views animated by PLC variables. The graphic editor is available online “ready to use”, and also offline using FactoryCast configuration software.

These views are created from a library of predefined graphic objects by simple copy/paste operations. The objects are configured to suit the user's requirements (colour, PLC variables, name, etc).

List of graphic objects available:
- Analog and digital indicators
- Horizontal and vertical bar charts
- Boxes for displaying messages and entering values
- Pushbutton boxes
- Trend recorders
- Vats, valves, motors, etc

Customized graphic objects can be added to this list. They can be reused in user Web pages that have been created using standard software for editing HTML pages.

The views created can be saved in the FactoryCast modules.

(1) Memory is not affected by power outages or reinitialization of the PLC.

Modicon Quantum automation platform

PlantStruxure Ethernet Architectures

FactoryCast HMI active Web services

FactoryCast HMI active Web servers

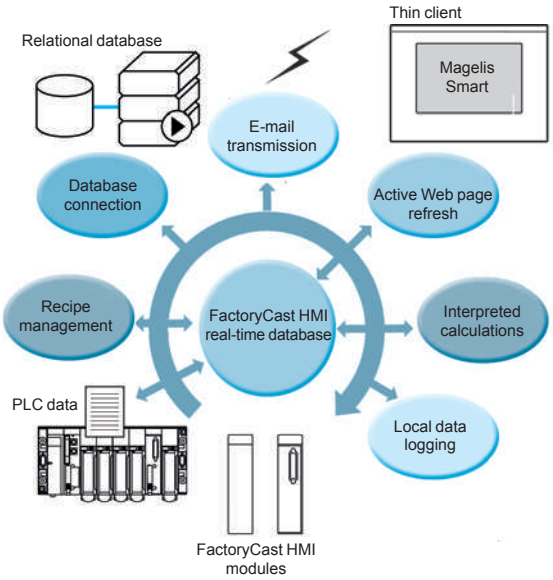

FactoryCast HMI Web services are integrated in the Web server modules embedded in the Modicon Premium and Quantum automation platforms.

These modules have the following Ethernet and Web services:
- Ethernet Modbus/TCP communication functions:
  - TCP/IP messaging service with Modbus TCP/IP and Uni-TE TCP/IP protocols
  - SNMP agent for standardized network management, which supports standard MIB II and Transparent Ready private MIB
- FactoryCast configurable Web services:
  - Rack Viewer PLC diagnostics functions (see page 5/27)
  - Data Editor read/write functions for PLC variables (see page 5/27)
  - Alarm Viewer alarm display functions (see page 5/28)
  - Graphic Data Editor online functions (see page 5/28)
  - Function for hosting and displaying user Web pages (see page 5/29)

FactoryCast HMI modules also provide the following specialized HMI Web services:
- Real-time HMI database management, independent of the PLC CPU
- Arithmetic and logical calculations on HMI data
- Direct connectivity with relational databases (traceability)
- Data Logging: recording data in the module
- Display of Unity Pro graphic runtime screens in the form of Web pages
- Recipe management (read/write)
- Alarm and report notification by e-mail
- Active page server, dynamic generation of animated HTML pages
- Dynamic generation of HTML reports
- Open data server interface. SOAP/XML WSDL interface protocol *(1)*

(1) In order to simplify their selection and ensure their interoperability within a system, each Transparent Ready product is identified by the class of services it provides. Letter A, B, C or D (level of service for the Web server) followed by 10, 20 or 30 (level of service for Ethernet communication).

Modicon Quantum automation platform

PlantStruxure Ethernet Architectures

FactoryCast HMI active Web services

Architectures

FactoryCast HMI Web servers can be integrated in various architectures:
- Installations that require a flexible distributed HMI solution
- Mixed architectures, supplementing conventional SCADA systems
- Architectures where a direct link is required between automation systems and information management levels (IT link)

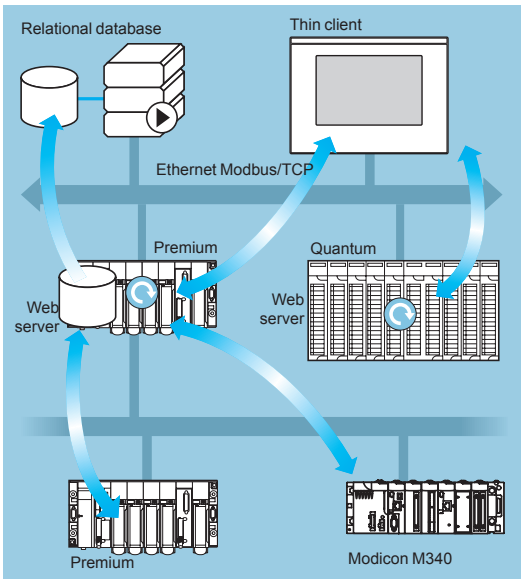

Flexible distributed HMI solution

Flexible distributed HMI solution

The use of Web-based technologies means that FactoryCast HMI can replace conventional HMI or SCADA solutions in applications where architectures require a flexible multistation HMI, thus providing a temporary “nomadic” remote control function.

These architectures consist of:
- Several PLCs networked on Ethernet, equipped with FactoryCast HMI Web server modules
- One or more PC terminals simply equipped with a Web browser thus providing a Thin Client interface (licence free)
- If necessary, a relational database in which FactoryCast HMI can archive data from the automation system

FactoryCast HMI modules read PLC data and execute HMI services (e-mail, interpreted calculations, connection to relational databases, updating Web pages) at source in the PLC, without affecting the PLC program or the scan time.

This solution provides:
- A reliable HMI application, which is executed at source in a robust PLC device
- An integrated multistation interface and remote access that is easy and cost-effective to set up (Thin Client terminal, for example Magelis Smart)
- An HMI application that is easy to maintain (the application is housed in a single location on the server side)
- Preventive maintenance via e-mail
- Greater availability for archiving data in the PLC

Modicon Quantum automation platform

PlantStruxure Ethernet Architectures

FactoryCast HMI active Web services

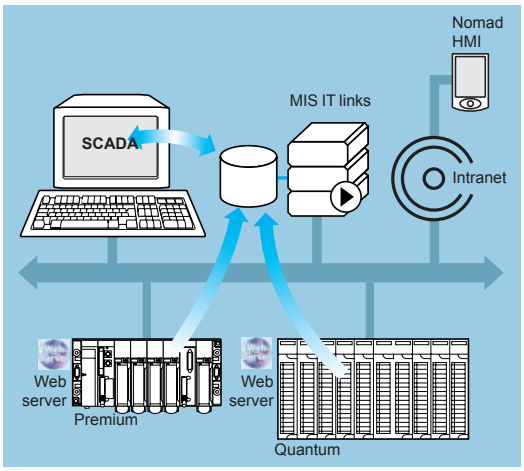

Mixed architecture

Architectures (continued)

Mixed architectures

In this type of architecture, FactoryCast HMI supplements conventional SCADA systems, such as Vijeo Citect, meeting the requirement to centralize information for global supervision from a central site.

Combining a FactoryCast HMI solution and a conventional SCADA solution enables:
- Simplification of the SCADA application by locating some of the SCADA processing functions at source, at PLC level
- Increased availability of the traceability function due to the direct connection between FactoryCast HMI modules and relational databases
- Powerful “ready to use” remote diagnostics capability
- “Nomad” client stations to be connected to the Intranet or Internet

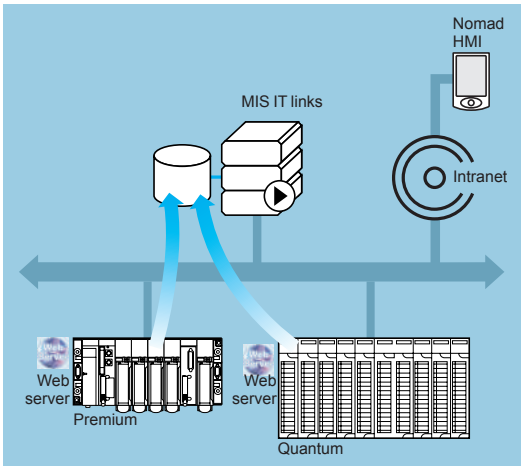

Direct links with the information management levels

Direct links with information management levels

In this type of architecture, FactoryCast HMI eliminates the need for intermediate devices (software or hardware gateways), which are expensive to install and maintain, by establishing direct links between the automation levels and the global information management levels (MES, ERP, etc).

The PLC manages the following links which allow a “collaborative” automation system to be set up, making it easier to share data in real time:
- Direct archiving of information from the automation system in relational databases
- Direct interaction with IT applications via the SOAP/XML client/server interface

This solution results in:
- Simplified architectures
- Lower installation, development and maintenance costs
- Increased reliability of information (the data is collected at source)
- Increased interoperability with IT applications
- Greater availability of data archiving

Modicon Quantum automation platform

PlantStruxure Ethernet Architectures

FactoryCast HMI active Web services

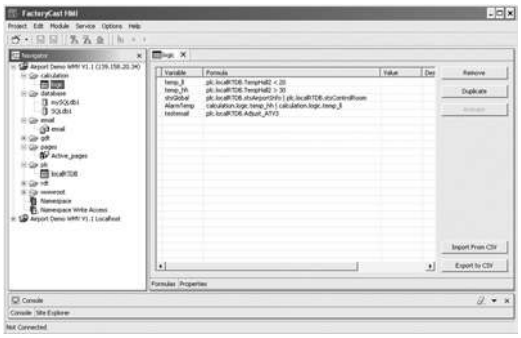

Real-time database

Specialized HMI services

Real-time database

With an internal architecture similar to that of an HMI/SCADA system, FactoryCast HMI modules manage their own variables database in real time, independently of the PLC program. It is this variable database that is used to execute various functions, including internal processing, archiving, alarm, e-mail, etc.
Variables in this real-time database are updated using the PLC's data acquisition service.
This service becomes operational once the following parameters have been set in the FactoryCast HMI software:

- Direct import of PLC variable/symbol databases (no double entry)
- Definition of the acquisition frequency (period at which this variable is updated)

Characteristics

- Maximum number of I/O variables per application: 1000 variables from PLCs
- Maximum number of internal variables per application: 100
- Acquisition frequency: 500 ms minimum

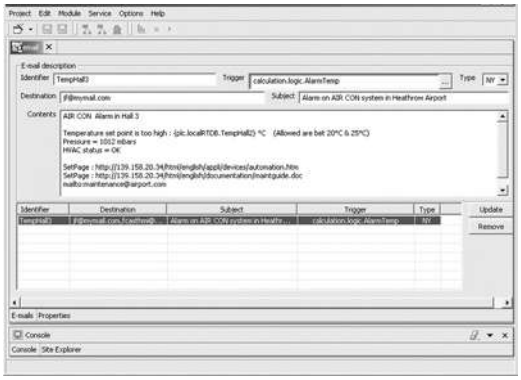

Calculation function

Calculation functions

The FactoryCast HMI server can carry out various arithmetic or logical operations on a combination of variables from the HMI database. These calculations include, for example, scaling, formatting, logic processing for event triggering, etc.

This calculation function is operational from the local HMI database, independently of the PLC CPU, and is in the form of spreadsheets where the formulas are defined in cells. These spreadsheets are interpreted and processed by the server. The result of each formula is associated with a new internal variable. The processing of each spreadsheet is initiated by a trigger.

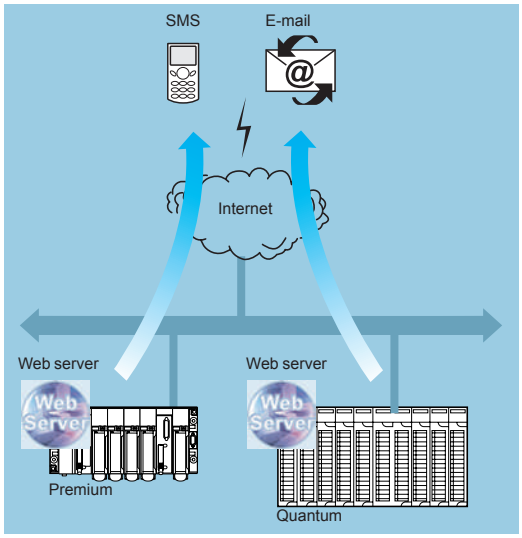

E-mail transmission

E-mail transmission

The FactoryCast HMI module can, on a specific event, send e-mails completely autonomously to a predefined list of e-mail addresses. This function is executed independently of the PLC program.

The event that triggers the e-mail may be associated with the following:

- A PLC variable (I/O, internal variable)
- An alarm, a threshold overshoot
- A machine or process state
- An operator action, etc

When an e-mail is sent it passes via an SMTP (Simple Mail Transfer Protocol) server. This server receives the e-mail and waits for the recipient to acknowledge it. The e-mail service is compatible with all SMTP servers. A return address can be defined should delivery to the destination address fail.

Characteristics

- Configuration of the SMTP server: compatible with all SMTP servers
- Maximum number of e-mails: 100
- Contents of e-mail messages: free text with embedded dynamic variable values (from the PLC) and hyperlinks (unlimited)

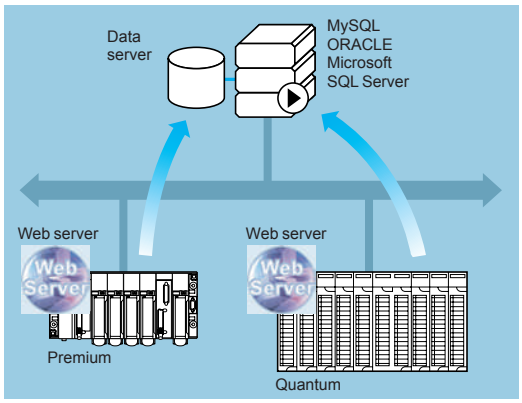

Connection to databases

Specialized HMI services (continued)

Connection to relational databases

The FactoryCast HMI module can be connected directly and completely autonomously to the following remote relational databases:

- SQL Server
- MySQL
- Oracle

This connection enables all process or internal data to be archived directly in the FactoryCast HMI module without any intermediate system (hardware or software).

The data can be archived (written) periodically and/or on a specific event.
These variables can be either from PLCs (I/O bits, internal bits, internal words and registers) or local to the module.

The FactoryCast HMI Roll Over function controls the size of tables by managing the maximum number of records.
This circular data archiving function automatically deletes the oldest data and can be accessed by simply setting parameters in the FactoryCast HMI software.

Characteristics

- Number of databases that can be connected: 3
- Number of tables that can be written per database: 10 maximum
- Number of columns per table: 50 maximum
- Type of database supported: Oracle, SQL Server and MySQL
- Automatic table creation: the FactoryCast HMI server creates a table in the database if one does not already exist

5

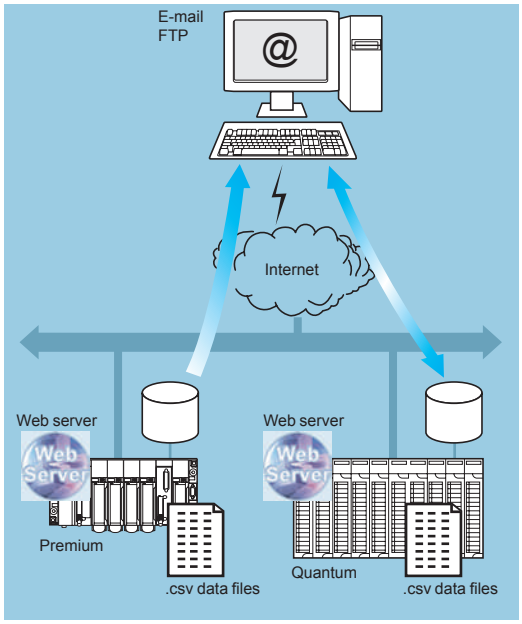

Data Logging

Data Logging

FactoryCast HMI modules can log data in the internal flash memory periodically or on an event.

This logging is done in a CSV file, which can be:

- Automatically exported via FTP
- Attached to an e-mail

This function is particularly useful for standalone installations, or stations that are not connected to an Intranet, or for local traceability of data.

Modicon Quantum automation platform

PlantStruxure Ethernet Architectures

FactoryCast HMI active Web services

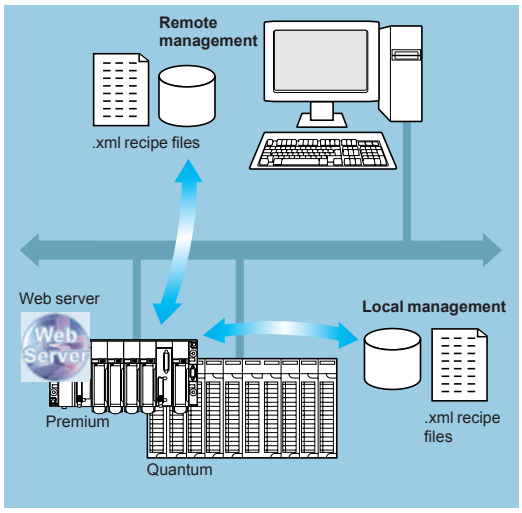

Recipe management

Specialized HMI services (continued)

Recipe management

The recipe management function enables a FactoryCast HMI application to take recipe files into account automatically on process events or at the request of an operator, applying the recipe values to the PLC data memory.

This function provides very flexible data management in the execution of production or process changes by sending new setpoints and new parameters.

Characteristics

- Recipes are described using XML format (SOAP/XML format)
- Recipes are stored in the module or remotely
- Recipes contain setpoint values in accordance with “standard” recipes, and these values are transferred to the PLC memory

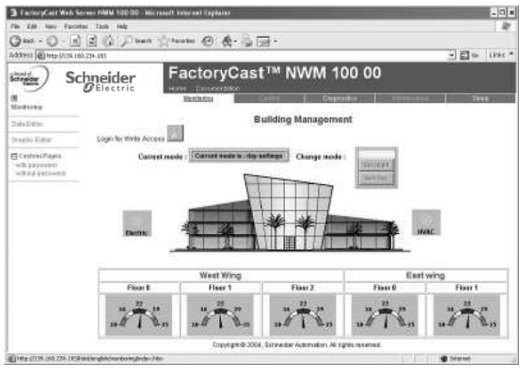

Web-based HMI interface

Web-based HMI interface

The memory of the FactoryCast HMI Web server receives Web pages defined by the user to provide a graphic HMI interface. The Active Web Server provides dynamic refreshing of Web pages generated by the server itself.

FactoryCast HMI supports two types of Web page:
- HTML pages animated in real time with Java graphic objects used to create the user interface (FactoryCast HMI comes with a complete library of Java graphic objects)
- Active Web pages dynamically generated in the Web server with integration of PLC variables inside the HTML code (PLC “tags”) which can be used to generate reports. These active pages consisting of HTML code are fully compatible with all Thin Client terminals (pocket PC, PDA, or PC terminal).

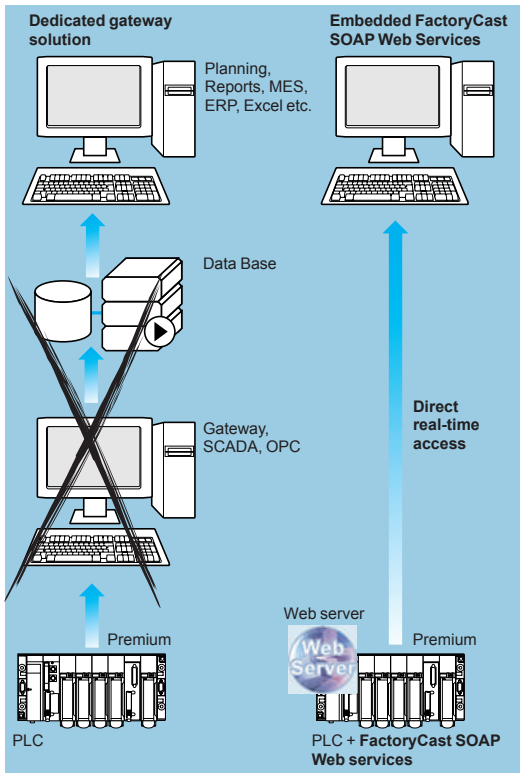

SOAP/XML client/server interface

SOAP/XML client/server interface

For greater interoperability, FactoryCast HMI implements the following SOAP/XML Web service: server function capable of answering SOAP requests generated by any client application (MES, ERP, SAP, SCADA or third-party applications developed in .NET or Java).

See page 5/36.

Modicon Quantum automation platform

PlantStruxure Ethernet Architectures

SOAP/XML Web services

Presentation, functions

The standardization of Web services has come about as a result of joint development between **Microsoft** and **IBM**, amongst others, validated at the **W3C** *(World Wide Web Consortium)* as an open "standard".
It now provides all the tools, specifications and environments needed for each platform. Web services are based on standards such as:

- **XML** *(eXtensible Markup Language)*, the universal standard for data exchange
- **SOAP** *(Single Object Access Protocol)* carried via the **HTTP** *(Hyper Text Transfer Protocol) channel*
- **WSDL** *(Web Services Description Language)*, in **XML** format

SOAP is currently considered to be the reference protocol, including in industry.
It has now been adopted by the main market players, including Microsoft (•NET, SQL Server, OFFICE, etc), IBM (Java, Web Sphere), Lotus, ORACLE, SUN, SAP, etc.

Embedded SOAP/XML Web services: ModbusXMLDa Web services

This new Transparent Ready service offers the hitherto unheard of possibility of making an IT/e-business application interact directly with the control system levels using the same standards.

With the implementation of ModbusXMLDa *(Modbus XML Data access)* services in FactoryCast Web servers, IT engineers can easily create their own application to access the desired information directly in the PLC and in real time.
Data exchanges are made in XML standard format in response to a request using the SOAP protocol.

The implementation of Web services in control system equipment makes it easy to achieve vertical integration of the control level and create even more collaborative architectures which can be used to link production systems to enterprise management systems. It simplifies access to information, reduces training, development and roll-out costs, and increases productivity.

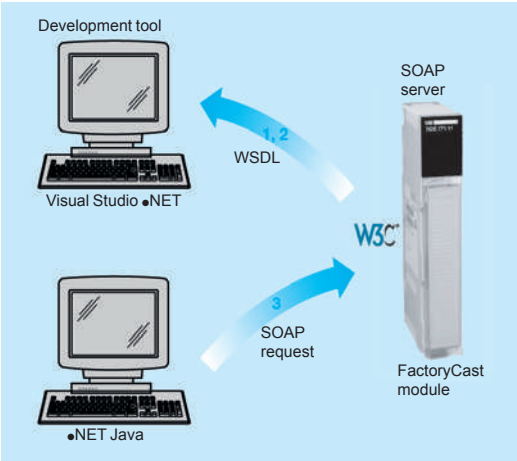

ModbusXMLDa server interface

ModbusXMLDa Web services in FactoryCast modules

ModbusXMLDa server interface

This implementation enables a SOAP client application (management level computer application, MES, ERP, etc) to communicate directly with a FactoryCast Web server module embedded in the PLC.

Exchanges are initiated by the SOAP client application (the server responds to these requests).

□ **Step 1: Creation of the client application with learning of the Web services**. The development environment (for example, Visual Studio •NET) looks in the FactoryCast server for the list of available services and their WSDL standard interfaces provided by the module.

□ **Step 2: Development of the client application**. The developer integrates the Web service functions using the code retrieved at step 1 of the learning process.

□ **Step 3: Execution of the client application**. The client application communicates in real time with the FactoryCast Web server module using the SOAP protocol.

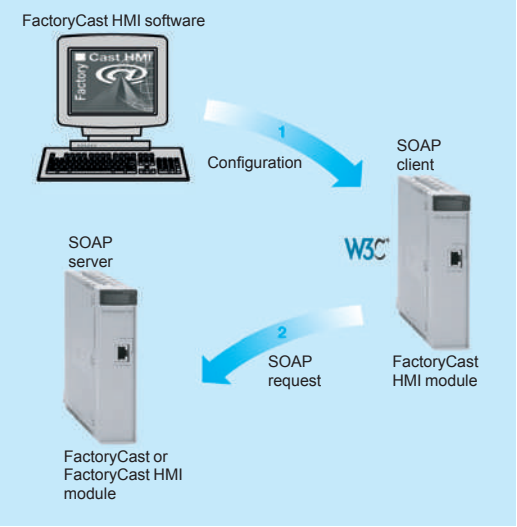

ModbusXMLDa client interface

Presentation, functions (continued)

ModbusXMLDa Web services in FactoryCast modules (continued)

ModbusXMLDa client interface

This implementation allows a FactoryCast HMI module to execute a SOAP client application in order to communicate with a remote SOAP server application (for example another FactoryCast Web server module or a computer management application, MES, ERP, etc).

Exchanges are initiated by the FactoryCast HMI client module (the remote application server responds to SOAP requests sent by the FactoryCast HMI module).

□ **Step 1: Configuration of the ModbusXMLDa client service**. The user declares the PLC variables that are to be exchanged (in read or write mode), using the FactoryCast HMI configuration software.

□ **Step 2: Use of the application**. The ModbusXMLDa client service executed in the FactoryCast HMI module communicates directly with the remote server application using SOAP requests in **XML** format.

ModbusXMLDa functions implemented in FactoryCast modules

Requests implemented	ModbusXMLDa functions implemented in FactoryCast modules
Access to data via physical addresses	ReadDeviceIdentification
	ReadMultipleRegisters
	WriteMultipleRegisters
	ReadCoils
	WriteMultipleCoils
	ReadDiscreteInputs
Access to data via symbols	Read, operation to read item list value
	Write, operation to write item list value
	Browse, operation to browse item list

ModbusXMLDa functions are implemented in the FactoryCast modules:

- ■ Server interface:
- □ Modicon M340: **BMXNOE0110**,
- □ Premium: **TSXETY5103, TSXWMY100**,
- □ Quantum: **140NOE77111, 140NWM10000**
- ■ Client interface:
- □ Premium: **TSXWMY100,**
- □ Quantum: **140NWM10000**

5

Modicon Quantum automation platform

Quantum Ethernet I/O

NOC Ethernet DIO head module

NOC Ethernet control network head module

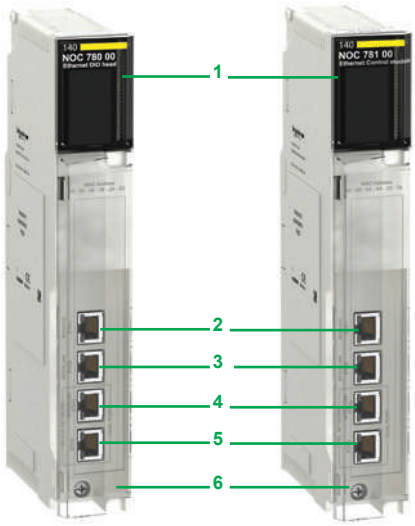

140NOC78000 *140NOC78100*

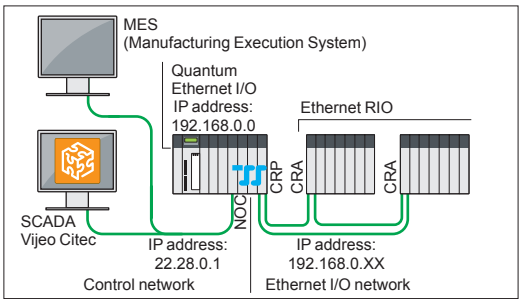

Router integrated in the 140NOC78100 Ethernet module managing several IP addresses

Example of a combination of NOC and CRP modules: 140NOC78100/140NOC78000/140CRP31200

NOC Ethernet DIO head module and control network head module *(1)(2)*

Presentation

There are two 140NOC78●00 Ethernet modules specifically for use in Quantum Ethernet I/O architectures:

■ The 140NOC78000 Ethernet DIO head module, installed in the Quantum local rack (4 modules max.). This module manages the Ethernet DIO devices connected to the Quantum Ethernet I/O network.

■ The 140NOC78100 control network head module, installed in the Quantum local rack (1 module max.). This module manages the exchanges with the control network in which other PLCs and/or supervisors may be located.

Ethernet DIO devices can be connected in a star, ring or network topology:

■ On the "SERVICE" port of CRP head adaptor modules or CRA drop adaptor modules on Quantum or Modicon X80 Ethernet RIO drops, or on the Ethernet ports of DRS switches. In this case, the NOC Ethernet DIO head module and the CRP need to be linked for the Ethernet DIO devices to be integrated in the Quantum Ethernet I/O network (see below).

■ Directly on the ports of the NOC Ethernet DIO head module *(3)*, with no link with the CRP Ethernet head adaptor module. In this case, the Ethernet DIO devices are independent of the Quantum Ethernet I/O network.

The 140NOC78100 module has an integrated router which can manage several IP addresses and provides transparency between the control network and the Quantum Ethernet I/O network. This function limits the use of external routers and makes setup easier. There must be a link between the NOC module and the CRP head adaptor module or the NOC DIO head module, depending on the configuration.

Capacity of NOC Ethernet modules

■ 140NOC78000 Ethernet DIO head module:
- □ 4 NOC modules max., installed in the Quantum local rack
- □ 128 Ethernet DIO devices max. per module

■ 140NOC78100 Ethernet control network head module:
- □ 1 NOC module max., installed in the Quantum local rack
- □ 64 Ethernet DIO devices max. per module

Description

1 Display block indicating the module status
2 RJ45 "SERVICE" port specifically for remote service tools or connecting Ethernet DIO devices (see "SERVICE" port on CRP and CRA modules, page 2/15)
3 RJ45 "INTERLINK" port for connecting the "Ethernet Interlink" cable
4 RJ45 "DEVICE NETWORK" port for connection to the Ethernet network
5 RJ45 "DEVICE NETWORK" port for connection to the Ethernet network
6 Removable hinged cover

Linking Ethernet modules and CRP Ethernet head adaptor module *(3)*

The two NOC Ethernet modules **(7, 8)** are linked to the CRP head adaptor module **(9)** using "Ethernet Interlink" cables **(10)**. Numerous combinations are possible:

7 140NOC78100 Ethernet control network head module
8 140NOC78000 Ethernet DIO head module
9 140CRP31200 Ethernet head adaptor module
10 TCSECN3M3M1S4/1S4U "Ethernet Interlink" cable

(1) Additional characteristics can be found on our website www.schneider-electric.com.
(2) Requires Unity Pro Extra Large software ≥ V7.0.
(3) 140NOE771●1 Ethernet Modbus TCP modules in installed automation system bases can also manage Ethernet DIO devices in a Quantum Ethernet I/O system. However these modules have performance restrictions which the 140NOC78000 module does not have. In particular, there can only be one 140NOE771●1 module in the Quantum Ethernet I/O network. Please contact our Customer Care Centre.

Modicon Quantum automation platform

EtherNet/IP and Modbus/TCP network module NOC Ethernet modules

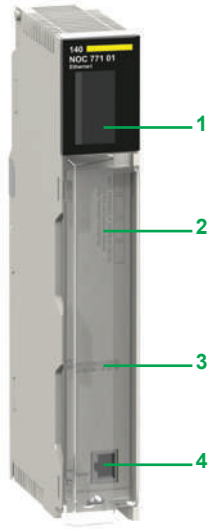

140NOC77101

Presentation

The **140NOC77101** network module acts as an interface between the Quantum PLC and other Ethernet network devices via the EtherNet/IP and Modbus/TCP communication protocols.
The standard format **140NOC77101** network module occupies a single slot in the rack of the Modicon Quantum platform.

Functions

The **140NOC77101** module offers the following functions:
- Modbus/TCP and EtherNet/IP protocols operating simultaneously
- Priority of Ethernet packets using QoS (Quality of Service)
- Module exchange without shutting down the PLC. Automatic module configuration recovery from the CPU
- Support for SCADA functions via the OPC protocol
- Embedded Web server for application monitoring and module diagnostics
- Sharing data between PLCs
- Network management using SNMP (Simple Network Management Protocol)

Description

The front panel of the **140NOC77101** module features:
1 A display block, which indicates the module status and the transmission status on the network:
- Active: communication status
- Mod Status: module operating status
- Net Status: network status
- Ready: configuration status
- Link: Ethernet connection status
- Activity: activity on the link
- 100 MB: connection at 100 Mbps
- Fduplex: full-duplex connection

A hinged cover for access to:
2 A space where the user can write the IP address
3 A MAC address label
4 A connector (RJ45) for 10BASE-T/100BASE-TX interface

140NOC77101

140NOC78000

140NOC78100

References

Description	Data rate Mbps	Number of ports	Function	Reference	Weight kg/*lb*
Modbus/TCP and EtherNet/IP network module	10/100	1 Ethernet	–	**140NOC77101**	0.350/ *0.772*
Quantum Ethernet DIO head module Necessary if Ethernet DIO devices in the architecture *(1)*	10/100	2 Ethernet 1 “SERVICE” port	–	**140NOC78000**	0.554/ *1.221*
Quantum Ethernet control network head module Necessary if there is a control network in the architecture	10/100/ 1000	2 Ethernet 1 “SERVICE” port	Integrated router	**140NOC78100**	0.554/ *1.221*
“Ethernet Interlink” cables Length 1 m			Standard version	**TCSECN3M3M1S4**	–
			UL version	**TCSECN3M3M1S4U**	–

(1) 140NOE771●1 Ethernet Modbus TCP modules in installed automation system bases can also manage Ethernet DIO devices in a Quantum Ethernet I/O system. However these modules have performance restrictions which the 140NOC78000 module does not have. In particular, there can only be one 140NOE771●1 module in the Quantum Ethernet I/O network. Please contact our Customer Care Centre.

CPUs: page 1/2
I/O architectures: page 2/6
I/O: page 3/2
Safety modules: page 6/2

Modicon Quantum automation platform

CPUs with integrated Ethernet port

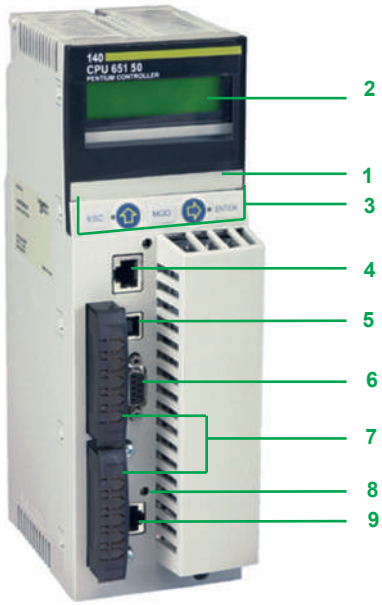

140CPU65150/60
140CPU65260

Presentation

High-end Quantum **140CPU65150, 140CPU65160, 140CPU65260** and **140CPU65860** CPUs have an integrated Ethernet 10BASE-T/100BASE-TX port for connection to an Ethernet Modbus TCP network via an RJ45 connector.

Description

140CPU65150, 140CPU65160, 140CPU65260 and **140CPU65860** CPUs feature the following on the front panel:

1 An LCD display cover, providing access to:
□ A key switch for locking system operations that may be requested and all the permitted parameters that may be modified via the LCD display (2) and 5-button keypad (3)
□ A slot for the backup battery
□ A "Restart" pushbutton
2 An LCD display (2 lines of 16 characters) with brightness and contrast controls
3 A keypad with 5 buttons (ESC, ENTER, MOD, Î, =>) and 2 LEDs
4 An RJ45 connector for connecting to the Modbus bus
5 A female USB B type connector for connecting the programming PC
6 A 9-way female SUB-D connector for connecting to the Modbus Plus network
7 Two slots for PCMCIA memory expansion cards in **140CPU65150**, **140CPU65160**, and **140CPU65260** and one slot in **140CPU65860**
8 Two LEDS marked COM and ERR
9 An RJ45 connector for connecting to the Ethernet network

140CPU65150/60

References

Description	CPU clock frequency	Program/data capacity *(1)*	Reference	Weight kg/*lb*
CPUs with integrated Ethernet link Class B30	166 MHz	7168 KB/512 KB	**140CPU65150**	–
	266 MHz	7168 KB/1024 KB	**140CPU65160**	–
		7168 KB/3072 KB	**140CPU65260**	–
		11264 KB/11264 KB	**140CPU65860**	–

(1) With PCMCIA card (see pages 1/12 and 1/13).

Modicon Quantum automation platform

Ethernet network modules

Presentation

140NOE771●●/NWM10000 Ethernet network modules are single format modules for installing in the slots in the local rack of a Modicon Quantum PLC configuration. A configuration can take from 2 to 6 application-specific modules, including network modules, depending on the type of CPU.

Description

The front panel of **140NOE77101, 140NOE77111** and **140NWM10000** Ethernet TCP/IP modules comprises:

1 A display block, which indicates the module status and the transmission status on the network

A hinged cover for access to:

2 A connector (MT-RJ) for 100BASE-FX optical interface
3 A standard connector (RJ45) for 10BASE-T/100BASE-TX interface

140NOE771●●
140NWM10000

References

Description	Data rate	Transparent Ready class	Reference	Weight kg/*lb*
Ethernet TCP/IP modules	10/100 Mbps	B30	**140NOE77101**	0.345/ *0.761*
		C30	**140NOE77111** *(1)*	0.345/ *0.761*
		D10	**140NWM10000**	0.345/ *0.761*

(1) Non-interfering

5

Modicon Quantum automation platform

AS-Interface cabling system

Master module for Modicon Quantum PLCs

Presentation

The AS-Interface (actuator sensor interface) system is a cabling solution used in machine level automated systems instead of conventional parallel wiring. This serial interface consists of an unshielded non-twisted pair enabling communication with user devices (sensors and actuators) provided with internal intelligence.

The 140EIA92100 AS-Interface module for Modicon Quantum PLCs is a single-slot module with one AS-Interface channel. The Quantum I/O map interface makes the module usable in local, remote (RIO) and distributed (DIO) I/O drops.

Network media and topology

The AS-Interface line uses an unshielded 2-wire cable for data and power distribution. The protocol is based on a master/slave hierarchy and allows up to 31 slaves to be connected to a single network over a maximum distance of 100 metres. This length can be increased through the use of repeaters.

The 140EIA92100 master module supports the AS-Interface M2 *(AS-Interface V1),* profile, one of the simplest to use. It is designed to meet the requirements of actuator and sensor devices where the connection cost is high and there is a relatively small amount of data to be handled.

The topology of the AS-Interface line is totally flexible and can be adapted to users' requirements (point-to-point, line or tree structure topology). In all cases, the total length of all branches of the line must not exceed 100 metres (without using repeaters).

The AS-Interface cable consists of one unshielded non-twisted pair enabling simultaneous powering of and communication with the connected devices. The wire has a cross-section of between 1.5 and 2.5 mm^2 depending on the power consumption of the devices.

Functions of the Modicon Quantum AS-Interface module

- Compatible with all Quantum CPUs
- Module parameter setup using Unity Pro software
- The Quantum I/O map interface allows 4 modules per local drop, 4 per remote drop (RIO) and 2 per distributed I/O drop (DIO)
- Display block of 32 LED indicators displays slave addresses and the state of slave I/O bits
- Hot swap function available without damage for all Quantum I/O racks
- Protected against reverse polarity of AS-Interface line inputs
- Less commissioning time and increased diagnostic capability reduces the overall cost of an automated system
- Automatic device reconfiguration (addresses and parameters)

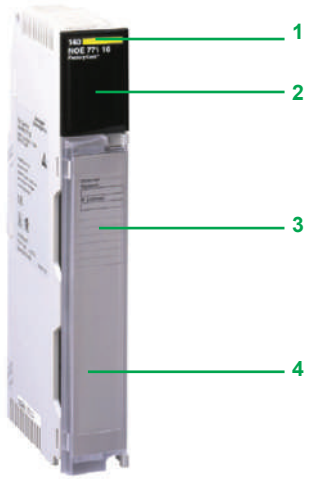

Description

The **140EIA92100** AS-Interface module consists of the following:

1 Type and colour code
2 Display block of 32 LED indicators
3 Removable hinged door
4 3-way male SUB-D connector for AS-Interface cable connection

Modicon Quantum automation platform

AS-Interface cabling system

Master module for Modicon Quantum PLCs

140EIA92100

References

Description	Number per Quantum PLC	Profile	Max. number of I/O	Reference	Weight kg/*lb*
AS-Interface master module for Quantum PLCs	4 per local drop 4 per remote drop (RIO) 2 per distributed drop (DIO)	AS-Interface M2	31 discrete devices, i.e. 248 I/O	**140EIA92100**	0.450/ *0.992*

XZCB1●●01

Separate parts

Description	Use	Length m/*ft*	Reference	Weight kg/*lb*
AS-Interface line ribbon cables (yellow)	For AS-Interface line	20/ *65.62*	**XZCB10201**	1.400/ *3.086*
		50/ *164.04*	**XZCB10501**	3.500/ *7.716*
		100/ *328.08*	**XZCB11001**	7.000/ *15.432*

5

Modicon Quantum automation platform

Modbus Plus network

Presentation

All Quantum **140CPUs** contain a Modbus Plus port, allowing high-speed point-to-point communications with easy implementation designed to simplify data sharing between nodes across a network. The Modbus Plus local area network facilitates communications between CPUs, host computers and other data sources via twisted pair cable or optional optical fibre cable. Communications take place at a speed of 1 Mbps.

Typical applications include interlocking on control networks, data acquisition, uploading/downloading software, remote online programming, connecting to operator interfaces and host computer data exporting. Modbus Plus is able to handle communications for real-time systems such as I/O and variable speed drives.

Topology

A standard Modbus Plus network based on twisted pair cable supports up to 32 nodes and can communicate over distances up to 450 m. If an application requires more nodes or longer distances, an RR85 Modbus Plus repeater placed between network connections allows 64 addresses over a distance of up to 900 m. As many as three repeaters can be used, supporting distances of up to 1800 m. The maximum number of network addresses supported is 64.

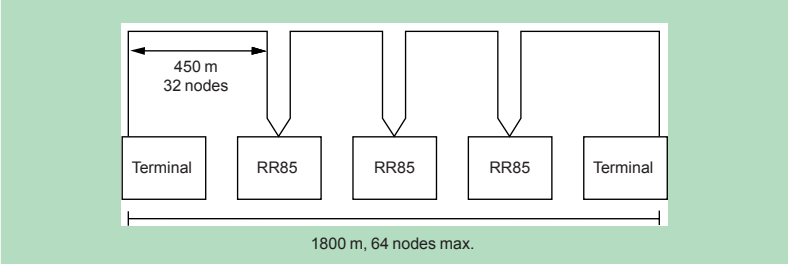

If an application requires more than 64 nodes, a BP85 Modbus Plus gateway can be used to connect two Modbus Plus networks. Bridges can be used to interconnect network segments in order to achieve maximum performance.

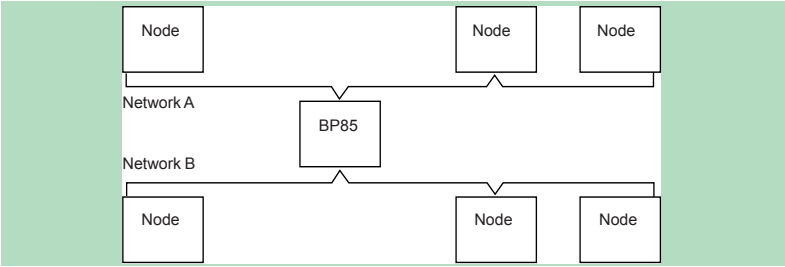

When a Modbus device, such as a programming terminal, operator interface or third-party computer, requires access to data from a Modbus Plus network, a BM85 Modbus Plus gateway must be used. The Modbus Plus BM85 gateway has four Modbus-compatible RS 232 serial ports, enabling a Modbus master or Modbus slave to connect to a Modbus Plus network. The gateway connections allow data exchanges between Modbus devices and with the entire Modbus Plus network.

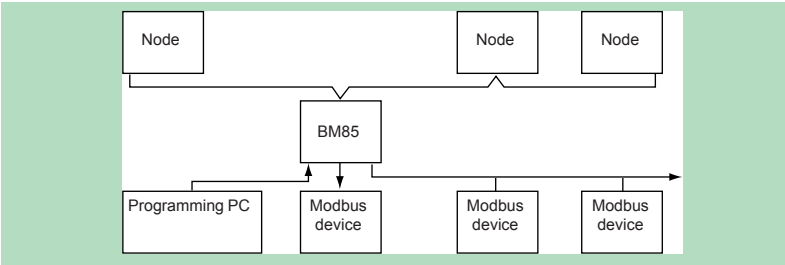

Modicon Quantum automation platform

Modbus Plus network

Presentation (continued)

The application program allows event-initiated communications and incorporates network diagnostics using either instructions in MSTR 984LL language or an equivalent function in an IEC 1131 language. A central computer can implement the Modbus Plus protocol, with NetBios-compatible software libraries that are called by this computer's application program. Appropriate libraries are provided for each type of computer interface, for the majority of platforms and operating systems.

Setup

Modbus Plus is a standalone network that uses inexpensive twisted-pair cables. It is a plug and play network. Modbus Plus connectivity is available on a great variety of PLC families, with additional connectivity made possible through our Collaborative Automation Partner Program. Modbus Plus supports up to 20,000 registers per second in a predictable, deterministic manner. Modbus Plus functions are based on a global database and a data table exchange mechanism.

Diagnostic programs and visual LED indicators are an aid to network operation.

Redundant cables

For high-availability applications, Schneider Automation offers a series of Modbus Plus network components and options for redundant operations. The redundant cabling enables Modbus Plus communication over two independent cable systems, with link health being checked and validated on every message transfer. A faulty link is identified in the network statistics. If one link fails, for any reason whatsoever, the system will automatically switch to the other cable while the faulty link is repaired.

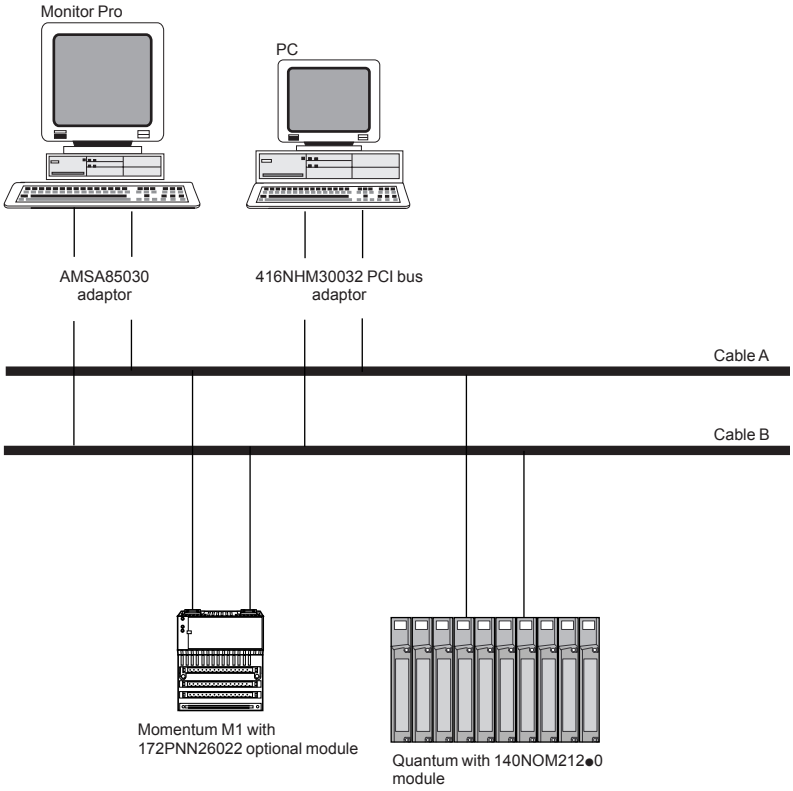

Modicon Quantum automation platform

Modbus Plus network

Global database

The global database allows global variables to be shared across a Modbus Plus network of PLCs. Because the global database is broadcast, this global information is updated extremely quickly.

Each CPU has up to 32 global data registers; Modbus Plus nodes can support 2048 global data registers (32 registers x 64 CPUs). Each of up to 64 CPUs on the network is responsible for updating its own 32 global data registers using an MSTR instruction. Each CPU also has the ability to read the 32 global data registers of all the other CPUs on the network. When a CPU updates its global data, this information is automatically broadcast to all other CPUs on the network. Each receiving CPU collects the new global data and stores them in its network interface memory. A CPU wishing to access another node's global data actually extracts them from its own network interface.

The global database works only within the same segment of the Modbus Plus network. It cannot be transmitted via an NWBMB5C00● multiplexer gateway or an NWBP85002 gateway.

Global data structure

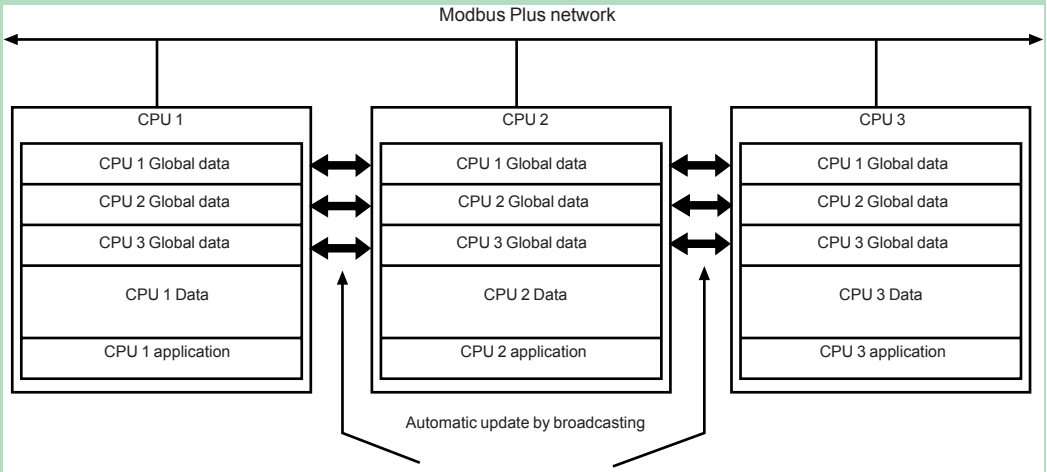

Peer Cop

Peer Cop is a software utility accessible under Unity Pro and can be used to define point-to-point data transactions between a CPU and the other nodes on the Modbus Plus network. Peer Cop uses defined references (bits or registers) as source and destination. A block of registers can therefore constitute the data source on the sending node, and another block of registers can be the destination on the receiving device. A maximum of 32 words can be addressed on a CPU via Peer Cop (a 16-channel discrete module is equivalent to one word).

Peer Cop offers two methods of data transaction - global and specific. Because all Modbus Plus nodes monitor the network, any one of them can extract the data addressed specifically to it. Likewise, all nodes can extract global data. Peer Cop enables the Modbus Plus node currently holding the token to direct specific data to particular nodes and broadcast global data to all nodes as part of its token frame. Each sending node can specify particular references as data sources, and each receiving node can specify the same or different references as data targets. When nodes receive global data, each node can index to specific locations in the incoming data and extract specific lengths of data from those points. Data transactions can therefore take place quickly as part of the token rotation and can be set up between sending references and receiving references.

Network and data security are obtained with the CPU's write-protect feature. It is therefore possible to configure sections of references within the CPU as read-only so that those references cannot be written by a node on the network.

Peer Cop, like the global database, works only within a segment of the Modbus Plus network.

Modicon Quantum automation platform

Modbus Plus network

Optical fibre network

Optional optical fibre cabling is available for a Modbus Plus network. With optical fibre, the total length of the network can be increased to as much as 3 km. The optical fibre medium provides secure links, which may be necessary in certain harsh environments. Optical fibre cabling is not susceptible to the effects of electromagnetic interference, RF interference or lightning. It also provides total isolation between terminal points on the link.

Point-to-point topology

A point-to-point link between CPUs on a Modbus Plus network allows safe communications in a harsh environment over distances of up to 3 km.

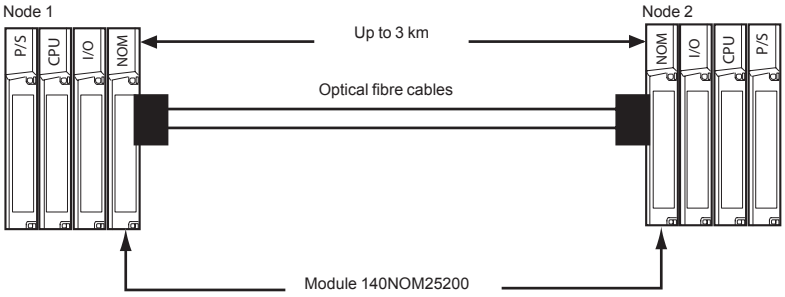

Ring topology

It is possible to create a “self-healing” ring in a mixed optical fibre/twisted pair network by connecting the unused optical fibre ports of the first and last 140NOM25200 modules, either directly or via a optical fibre repeater. This type of configuration retains all the advantages described previously, with built-in redundancy in addition. A broken connection between any two Quantum modules in the ring will automatically reconfigure the network into a bus configuration, and continue communication.

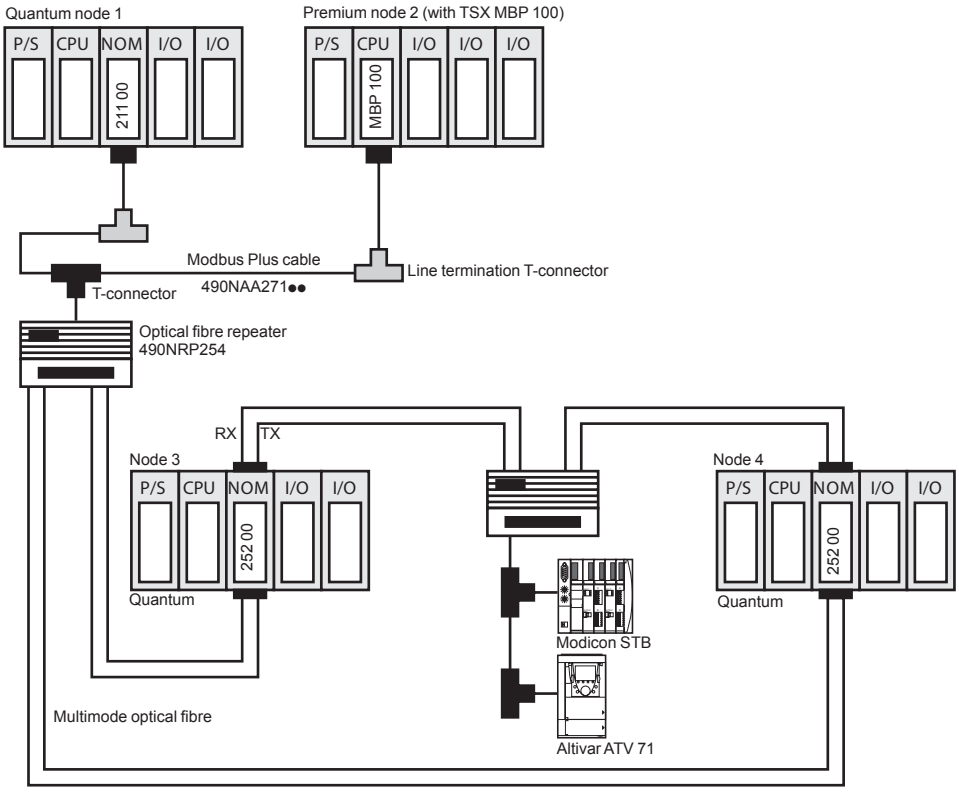

Modicon Quantum automation platform

Modbus Plus network

I/O architecture

Presentation

The Modicon Quantum platform DIO (Distributed I/O) architecture uses the same I/O modules as a local or remote I/O (RIO) subsystem, and reduces installation costs by using low-cost twisted pair cables.

Special DIO drop adaptors, with a built-in power supply, are used with each drop. The Quantum DIO drop adaptor is specifically designed to link I/O modules to the head-end via a shielded twisted pair cable. DIO drop adaptors (one per drop) also provide the power supply to the I/O (maximum 3 A), from a 24 V ⎓ or 115/230 V ∼ source. These DIO drops can also be powered by standard 8 A power supply modules. In this case the 3 A supply built into the drop adaptor is not wired.

The DIO architecture can take up to three head-end adaptors per CPU and up to 1800 m per network (using RR85 repeaters). Even greater distances can be achieved using optical fibre repeaters.

The DIO architecture is based on Modbus Plus technology. Each DIO network can take 32 nodes over 472 m (64 nodes over 2000 m with repeaters). Up to three DIO networks are permitted, one native to the CPU itself, and the other two by adding **140NOM211●0** (with single network cable) or **140NOM212●0** (with redundant network cable) head adaptor modules on the local Quantum rack.

RIO and DIO architectures can be combined in the same CPU for large quantities of I/O.

All products that can be connected to Modbus Plus networks (for example HMI equipment) can coexist on the DIO network. For example, a programming terminal can be connected to the DIO network to monitor and troubleshoot a control system from a remote site, without requiring a separate communication link.

Typical multi-network distributed I/O system

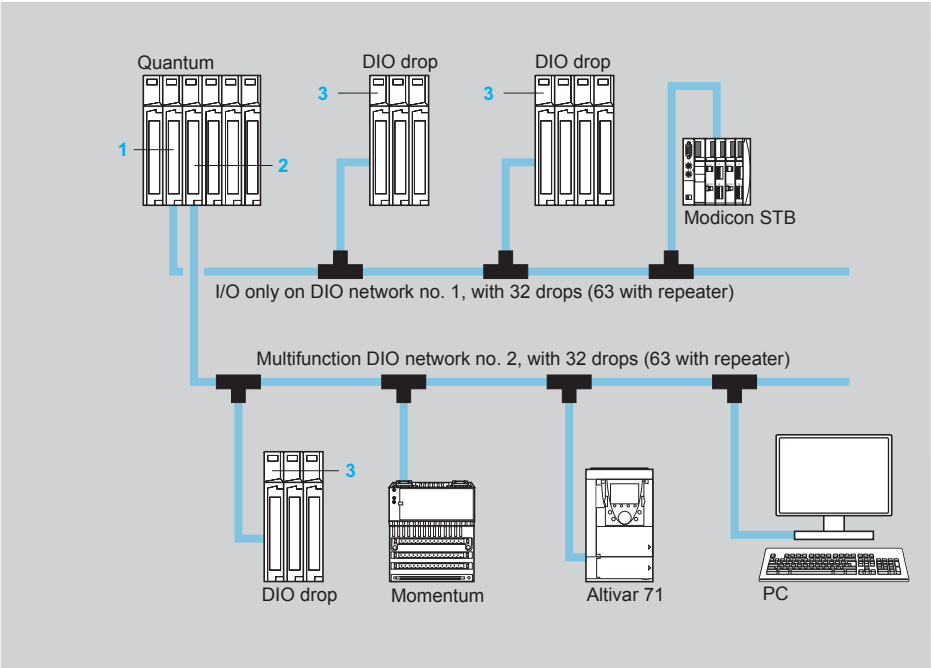

1 Quantum CPU with integrated Modbus Plus port **140CPU●●●●●** (for DIO no. 1)
2 Modbus Plus head-end adaptor **140NOM2●●DO** (for DIO no. 2 and no. 3)
3 DIO drop adaptor **40CRA21●●0** (including 24 V ⎓ or 115/230 V ∼ power supply)

Line length 472 m max., 1800 m with repeaters

Using Modbus Plus for distributed I/O (DIO)

Modbus Plus is used as a fieldbus in a distributed I/O architecture, controlled by a Quantum CPU.

The Modbus Plus "master" at the head end of the network is a Quantum CPU with an integrated Modbus Plus port or a **140NOM21●00** head-end adaptor module.

A **140CRA211●0** drop adaptor module must be installed in each I/O drop in the DIO architecture. A **140CRA211●0** module acts both as a distributed I/O adaptor and a power supply for the I/O drop (no additional power supply module is necessary). Each DIO drop can address up to 30 input words and 32 output words.

Architecture (continued)

Using Modbus Plus for distributed I/O (DIO) (continued)

A single or redundant network cable topology can be used in a distributed I/O system. Depending on the system requirements, one of the following combinations of modules can be used to create a DIO system on Modbus Plus:

Head-end no. 1	Head-end no. 2 or no. 3	DIO drop	Type of DIO system
CPU with integrated Modbus Plus port **140CPU**	DIO adaptor **140NOM21100**	Adaptor **140CRA21110**	Single network cable and 115/230 V ∼ drop power supply
		Adaptor **140CRA21120**	Single network cable and 24 V ⎓ drop power supply
–	DIO adaptor **140NOM21200**	Adaptor **140CRA21210**	Redundant network cable and 115/230 V ∼ drop power supply
		Adaptor **140CRA21220**	Single network cable and 24 V ⎓ drop power supply

5

Modicon Quantum automation platform

Modbus Plus network

Connection

Network with PC cards for Modbus Plus

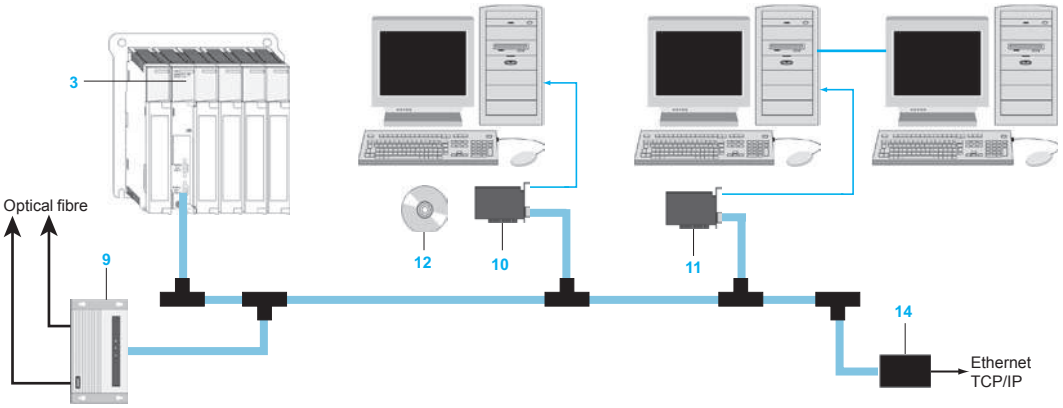

Modbus Plus network for Quantum and Momentum

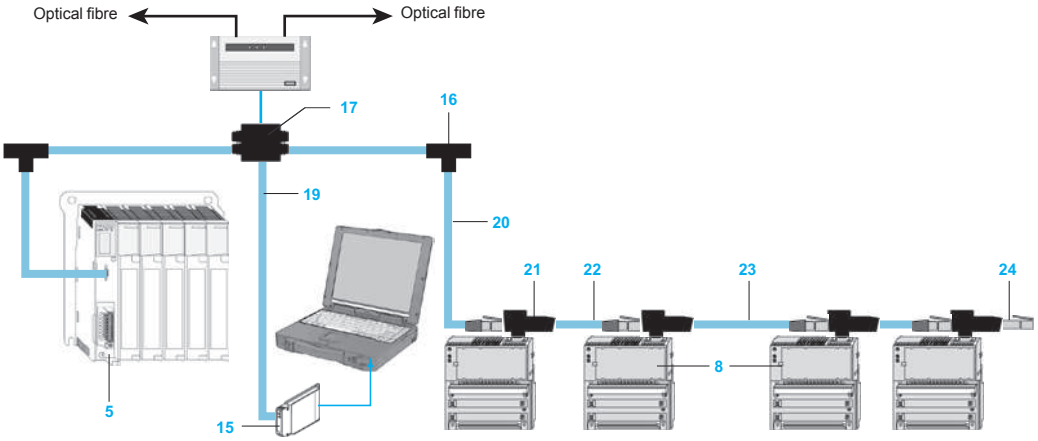

Modbus Plus redundant network

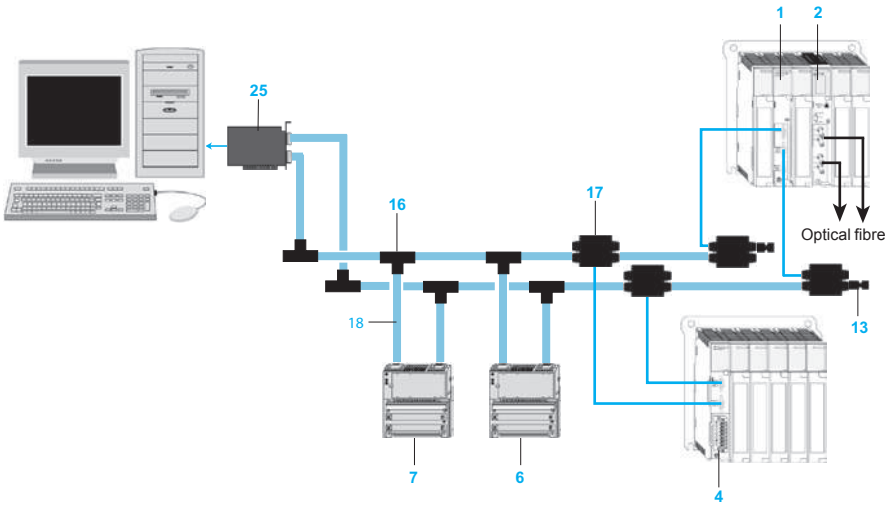

Connection (continued)

For diagram numbers, see page 5/48

1 **140NOM21200**: Quantum Modbus Plus head-end interface, redundant medium, twisted pair cable
– **140NOM21100**: Quantum Modbus Plus head-end interface, single medium, twisted pair cable
2 **140NOM25200**: Quantum Modbus Plus head-end interface, redundant medium, optical fibre cable (TX/RX)
3 **140CPU**: Quantum CPU with integrated Modbus Plus port, single-cable medium, twisted pair cable
4 **140CRA21210**: Quantum Modbus Plus drop interface and power supply, redundant medium, 115/230 V ∿
– **140CRA21220**: Quantum Modbus Plus drop interface and power supply, redundant medium, 24 V ⎓
5 **140CRA21110**: Quantum Modbus Plus drop interface and power supply, single-cable medium, 115/230 V ∿
– **140CRA21120**: Quantum Modbus Plus drop interface and power supply, single-cable medium, 24 V ⎓
6 **170PNT16020**: Momentum Modbus Plus communication adaptor, redundant network, IEC medium
7 **170NEF16021**: Momentum Modbus Plus communication adaptor, redundant network, 984 medium
– **170NEF11021**: Momentum Modbus Plus communication adaptor, non-redundant network, 984 medium
8 **170PNT11020**: Momentum Modbus Plus communication adaptor, non-redundant network, IEC medium
9 **490NRP25400**: Modbus Plus repeater, line/drop, optical fibre medium
– **490NRP25300**: Modbus Plus repeater, point-to-point, optical fibre medium
– **NWBM85C002**: Modbus Plus gateway/multiplexer, panel or shelf mount, 4 Modbus Plus ports
– **NWRR85001**: Modbus Plus repeater, coaxial cable
10 **AMSA85030**: Modbus Plus ISA PC adaptor, single port
11 **416NHM30030**: Modbus Plus PCI PC adaptor, single port
12 **SWMXDS001**: Modbus Plus driver suite
13 **990NAD23011**: Modbus Plus T-connector ruggedized terminators
14 **174CEV20040**: Modbus Plus-Ethernet bridge
15 **416NHM21234**: Modbus Plus type III PCMCIA card, single port with Plug-and-Play capability
16 **990NAD23000**: Modbus Plus T-connector, IP 20
17 **990NAD23010**: Modbus Plus T-connector, IP 65
– **ASMBKT085**: Modbus Plus inline connector
– **ASMBKT185**: Modbus Plus terminating connector
18 **990NAD21110**: Drop cable, 2.4 m
19 **990NAA21510**: Ruggedized T-connector programming cable, 3.05 m
20 **170MCI02120**: Modbus Plus RJ45 cable, 3.05 m
21 **170XTS02000**: Modbus Plus “T” connector (DB9 base)
22 **170MCI02010**: Modbus Plus RS 485 cable, 25 cm
23 **170MCI02080**: Modbus Plus RJ45 cable, differential, 10 m
24 **170XTS02100**: Modbus Plus RJ45 terminator
25 **416NHM30032**: Modbus Plus PCI PC adaptor, two ports
– **NWBP85002**: Modbus Plus Bridge Plus, 4 Modbus Plus ports

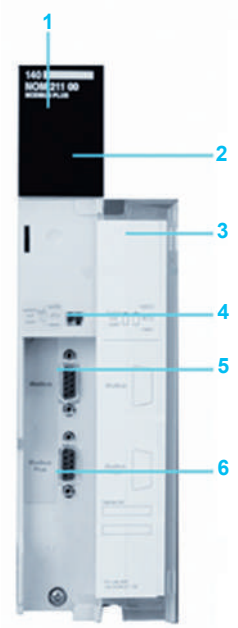

140NOM211●0 / 140NOM212●0

Description

140CPU modules incorporate a Modbus Plus port as standard, which can be used for DIO network no. 1 (see description on pages 1/8 and 1/9).

140NOM211●0 and **140NOM212●0** Modbus Plus head-end adaptors for DIO network no. 2 or no. 3 have the following on the front panel:

1 Model number and colour code
2 A display block with 6 LEDs: Ready (green), Fault (red), Pwr ok (green), Modbus + (green), Ready (green), Error B (red)
3 A removable hinged door with a customizable identification label
4 A microswitch for configuring the Modbus port (ASCII-RTU-mem)
5 A 9-way female SUB-D connector for connecting the Modbus link
6 A 9-way female SUB-D connector for connection to DIO Modbus Plus network no. 2 or no. 3

Modicon Quantum automation platform

Modbus Plus network

References

Modbus Plus gateways and repeaters

Description	Supply	Medium	Number and type of ports	Item	Reference	Weight kg/*lb*
Gateways/ Multiplexers	115/220 V ∿ or 24 V ⎓	Panel or shelf	2 Modbus Plus 4 RS 232 Modbus	–	**NWBM85C002**	–
	24 V ⎓ or 115 V ⎓	19" rack-mount	2 Modbus Plus 4 RS 232 Modbus	–	**NWBM85D008**	–
Router	115/220 V ∿ or 24 V ⎓	Panel or shelf	4 Modbus Plus	–	**NWBP85002**	–
Modbus Plus repeater		Coaxial cable		–	**NWRR85001**	–
Point-to-point transceiver		Optical fibre/copper		–	**490NRP25300**	–
Line/drop transceiver		Optical fibre/fibre optic/copper		9	**490NRP25400**	–

Modbus Plus communication devices *(1)*

Description		Medium	Type	Item	Reference	Weight kg/*lb*
Quantum Modbus Plus	**DIO drop adaptors** (including power supply)	Single	115/230 ∿ *(3)*	5	**140CRA21110**	–
			24 ⎓ *(4)*	–	**140CRA21120**	–
		Redundant	115/230 ∿ *(3)*	4	**140CRA21210**	–
			24 ⎓ *(4)*	–	**140CRA21220**	–
	Quantum CPU DIO head-end no. 1	Single	Twisted pair cable	3	**140CPU** *(2)*	–
	DIO head-end adaptors no. 2 and no. 3	Single	Twisted pair cable	–	**140NOM21100**	–
		Redundant	Twisted pair cable	1	**140NOM21200**	–
		Redundant	Optical fibre cable	2	**140NOM25200**	–
Momentum Modbus Plus	Communication adaptor	Non-redundant	IEC medium	8	**170PNT11020**	–
		Network	984 medium	–	**170NEF11021**	–
		Redundant	IEC medium	6	**170PNT16020**	–
		Network	984 medium	7	**170NEF16021**	–

PC interface cards

Description	Number of ports	Item	Reference	Weight kg/*lb*
Modbus Plus ISA PC adaptor	1	9	**AMSA85030**	–
	2	–	**AMSA85032**	–
Modbus Plus PCI PC adaptor	1	11	**416NHM30030**	–
	2	25	**416NHM30032**	–
Modbus Plus, PnP type III PCMCIA card	1	15	**416NHM21234**	–
Modbus Plus driver suite	–	12	**SWMXDS001**	–

(1) Other devices: For TSX Micro/Premium PLCs, Modicon STB distributed I/O, etc, see the respective catalogues.
(2) See pages 1/12.
(3) Input current: 0.4 A at 115 V ∿; 0.2 A at 230 V ∿. External fuse: 1.5 A
(4) Input current: 1.6 A. External fuse: 2.5 A

Modicon Quantum automation platform

Modbus Plus network

References (continued)

Connection cables

Description	Length m/*ft*	Item	Reference	Weight kg/*lb*
Modbus Plus standard cables	30.5/*100.07*	–	490NAA27101	–
	152.5/*500.33*	–	490NAA27102	–
	305/*1000.65*	–	490NAA27103	–
	457/*1558.39*	–	490NAA27104	–
	1525/*5003.27*	–	490NAA27106	–
Modbus Plus drop cables	2.4/*7.87*	18	990NAD21110	–
	6/*19.68*	–	990NAD21130	–
PC programming cable/ T-connector	3.05/*10.01*	19	990NAA21510	–
Modbus Plus RS 485 cable	0.25/*0.82*	22	170MCI02010	–
	1/*3.28*	–	170MCI02036	–
Modbus Plus RS 485 Master communication cable (RJ45/RJ45)	0.3/*0.98*	–	170MCI04110	–
Modbus Plus RJ45 cable	3/*9.84*	20	170MCI02120	–
Modbus Plus differential RJ45 cables	3/9.84	–	170MCI02180	–
	10/*32.81*	23	170MCI02080	–
Cable (RJ45/RJ45)	1/*3.28*	–	110XCA28201	–
	3/*9.84*	–	110XCA28202	–
	6/*19.68*	–	110XCA28203	–

Cabling accessories

Description	Type	Item	Reference	Weight kg/*lb*
Modbus Plus power supply module connector	IP 20	–	140XTS00500	–
Modbus Plus D-shell adaptor for AT serial port	9-way RJ45	–	110XCA20300	–
Modbus Plus D-shell adaptor for XT serial port	25-way RJ45	–	110XCA20400	–

Cabling tools

Description		Item	Reference	Weight kg/*lb*
Modbus Plus network cable installation tool	–	–	ASMBPL001	–
RJ crimping tool	–	–	170XTS02300	–
Earthing clamp	–	–	424244739	–

Connectors

Description	Sold in lots of	Item	Reference	Weight kg/*lb*
Modbus Plus inline	1 per kit	–	ASMBKT085	–
Modbus Plus terminator	2 per kit	–	ASMBKT185	–
Modbus Plus "T" connector (DB9 base)	1	21	170XTS02000	–
RJ45 terminator	2 per kit	24	170XTS02100	–
RJ45 "T" connector for RS 485 cable (DB9 base)	–	–	170XTS04000	–
RJ45 shielded connectors	20 per kit	–	170XTS02200	–
RJ45 "T" connector for RS 485 cable	1	–	170XTS04100	–
RS 485 multi-master RJ45 drop connections	2	–	170XTS04200	–

T-connectors

Description	Sold in lots of	Item	Reference	Weight kg/*lb*
Modbus Plus T-connector, IP 20	1	16	990NAD23000	–
Modbus Plus ruggedized T-connector, IP 65	1	17	990NAD23010	–
Modbus Plus T-connector ruggedized terminators	2 per kit	13	990NAD23011	–
Modbus Plus DIN rack flush-mounting assembly with ruggedized T-connector	1	–	990NAD23012	–
Modbus Plus lightning arrester	1	–	490NAC72100	–

CPUs: page 1/2
I/O architectures: page 2/6
I/O: page 3/2
Safety modules: page 6/2

Modicon Quantum automation platform

Profibus DP V1 and Profibus PA buses

Profibus Remote Master module

Profibus DP fieldbus

Profibus DP is one of the most widely used fieldbuses in industry. Based on a master/slave protocol, only master stations, sometimes called active stations, have the right to access the bus, with slave, or passive, stations being limited to responding to interrogations.

Version V0 of Profibus only allows cyclic exchanges with I/O, whereas version V1 offers an acyclic message handling channel that can be used for device adjustment or diagnostics during operation.

The physical link is a single shielded twisted pair, but numerous interfaces are available for creating all sorts of topologies - tree, star, or ring - including those using optical fiber or a non-physical link.

Gateways can be used to communicate transparently with Profibus PA, one of the most commonly used standards in process applications for connecting instrumentation. Profibus PA can be used to supply devices across the network and also to install sensors in potentially explosive zones (ATEX).

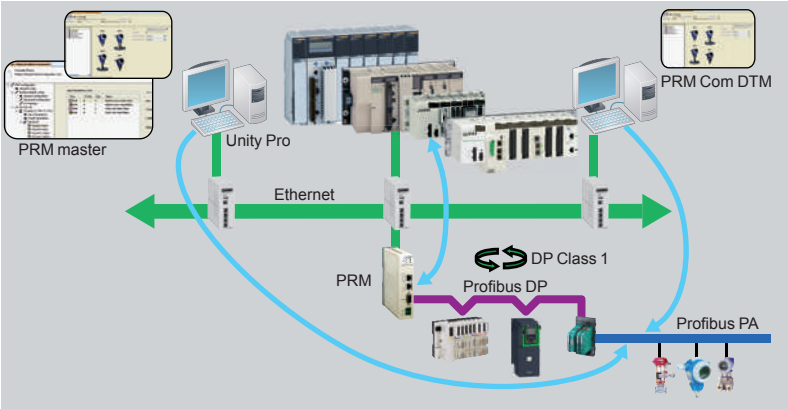

Profibus Remote Master (PRM) module

Presentation

The Profibus Remote Master (PRM) module is connected to the Ethernet Modbus TCP/IP network via its integrated 2-port switch, as close as possible to the process and the instrumentation.

The PRM module can be used to connect Modicon Quantum, Premium, M580, and M340 PLCs to Profibus DP V1 via the I/O scanner function.
Irrespective of the type of PLC, only one product reference is required and setup is identical, thus reducing training and maintenance costs.
Two versions are available, standard and tropicalized, so as to adapt to any type of environment.

The PRM module is open to Asset Management tools. A dedicated communication DTM is supplied with the product, thus allowing any compatible FDT standard tool to remotely adjust devices on Profibus using Ethernet.

Configuration

From a single Unity tool, the user can create the Profibus configuration, the PLC application, and configure or calibrate devices.
The latter are integrated in the Unity catalog via their DTMs if they exist, or their *gsd* files.

The I/O scanner configuration is created implicitly in Unity Pro using the Profibus configuration. The parameters assigned by default help optimize performance, as well as the consistency of I/O data in the PLC application, irrespective of the PLC platform.
Similarly, the I/O variables defined and presymbolized in the DTMs can be used directly in the application. Finally, the screens integrated in Unity Pro, together with the diagnostic functions integrated in the device DTMs simplify application maintenance.

Modicon Quantum automation platform

Profibus DP V1 and Profibus PA buses

Profibus Remote Master module

Profibus Remote Master (PRM) module (continued)

Connectable devices

The following Schneider Electric devices can be connected to this bus:
- TeSys U and TeSys T starter-controllers
- Momentum and Modicon STB distributed I/O
- Altivar 312/61/71/Process variable speed drives for asynchronous motors
- Lexium 05 and 32 servo drives for brushless motors
- Altistart ATS 48 soft start-soft stop units
- LMC Packdrive 3
- Osicoder
- Any third-party device compatible with Profibus DP and PA standard profiles

Limitations

Once saved, the Unity project incorporates all the Profibus parameters as well as those of the slaves connected to the bus. Modicon Quantum, Premium, M580, and M340 PLCs are capable of embedding all this data so that an empty Unity terminal without any applications is able, after a simple transfer from the PLC, to locate the whole application, including the slave parameters. This function is called ETS *(Empty Terminal Service)*.

In certain cases, it may be that the memory size required to save the device parameters exceeds the PLC memory capacity (signaled by a “memory full” message during the build). This is particularly likely on devices which have DTM (the most common instrumentation on PA). Typically, each device of this type takes up around 20 KB of the PLC memory.

It is therefore essential to create a memory map according to the type of configuration used and possibly adapt it accordingly, either by increasing the amount of memory dedicated to the application (by reducing the zone allocated to data), or by increasing the overall memory via cartridges available in the catalog.

If the ETS function is not required, Unity Pro can also be configured in such a way as to reduce the size of the embedded data by disabling comments and animation tables, or by disabling the upload function so that the application does not include data relating to DTMs. In this case, the upload from an empty terminal function is no longer available.

References

The Profibus Remote Master module is supplied with a CD-ROM, which includes:
- The PRM master DTM for operating the PRM on Quantum, Premium, or M340 starting from Unity V5.0
- The PRM Gateway DTM for operating the PRM on M580 starting from Unity V8.0
- The generic Profibus DTM for managing devices not provided with DTM but just with gsd files
- The PRM communication DTM providing total communication transparency from any FDT tool (out of Unity) up to the Profibus devices
- A library of DFBs for PRM management or support of explicit DP V1 communication with Profibus slaves
- PRM technical documentation

TCSEGPA23F14F

490NAD91103

Profibus Remote Master modules

Description	Type	Reference	Weight kg/*lb*
Profibus Remote Master modules	Standard	**TCSEGPA23F14F**	0.620/ *1.367*
	Ruggedized *(1)*	**TCSEGPA23F14FK**	0.620/ *1.367*

Profibus DP bus connection components

Description	Type	Reference	Weight kg/*lb*
Distributed I/O on Profibus DP bus	Modicon STB network interface module	**STBNDP2212**	0.140/ *0.309*
	Momentum communication module	**170DNT11000**	0.070/ *0.154*
Connectors for remote I/O communication module	Line terminators	**490NAD91103**	–
	In-line connector	**490NAD91104**	–
	In-line connector	**490NAD91105**	–
Description	**Length**	**Reference**	**Weight kg/*lb***
Profibus DP connection cables	100 m/*328.08 ft*	**TSXPBSCA100**	–
	400 m/*1,312.33 ft*	**TSXPBSCA400**	–

(1) Conformal coating and extended operating temperatures between - 25 and + 70 °C/ - 13 and 158°F (see ruggedized module characteristics, page 8/10)

Modicon Quantum automation platform

Asynchronous serial link module

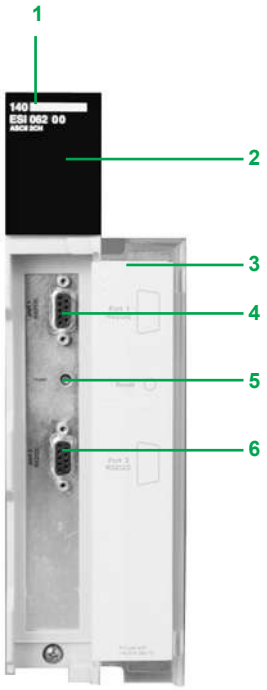

Presentation

The **140ESI06210** asynchronous serial link module is a general-purpose ASCII communication module that can be used to exchange data messages with third-party devices.

This module is particularly suitable for use in applications with printers, bar code readers and scanners, or devices communicating via a serial link, such as weigh scales, meters or other measuring devices.

This module has been designed for relatively simple point-to-point ASCII communications. A resident command interpreter can be used primarily to specify the formats and baud rate of the communication ports in operational mode, using a serial link management utility such as Microsoft® HyperTerminal. This interpreter can also be used to enter ASCII message formats, which will be stored in this module.

These message formats constitute the base around which communication is organized. Thus, using an appropriate syntax, these formats define for example, for transmissions, the fixed characters that must be sent on the communication line. These transmission message formats can also be used to specify the sending of data that is an image of the card registers, in accordance with a particular representation (binary, integer, ASCII, etc).

For reception, the message formats used are usually limited to specifying a wait for a certain number of values or characters, directed to the module's internal data registers. Unlike transmission, the specifiers used on these reception message formats can be used to define the numerical base(s).

The Quantum PLC application program communicates with the asynchronous serial link module via mailbox registers. These registers submit commands to the module and translate the responses. Communication commands are processed by requesting transmission on a port, through the use of a message format. Conversely, it is possible to listen for reception on this port, through the use of a message format.

If the exchange mailboxes between the PLC and the module are not large enough to carry all the application data required for a transaction, at the same time as the transmission and reception commands, additional commands (Get/Put) will be used for exchanges between the PLC database and the module's internal registers.

Description

The **140ESI06210** asynchronous serial link module features the following on the front panel:

1. Module number and colour code
2. A display block
3. A removable hinged door with a customizable identification label
4. A 9-way SUB-D connector (RS 232C comms port 1)
5. A reset button
6. A 9-way SUB-D connector (RS 232C comms port 2)

Modicon Quantum automation platform

Asynchronous serial link module

140ESI06210

References

Description	Characteristic	Reference	Weight kg/*lb*
ASCII serial link module with 2 RS 232 C ports	19.2 Kbps	**140ESI06210**	0.300/ *0.661*
Backup battery holder module	2 C type lithium batteries, 3 V	**140XCP90000**	–
Cables for programming terminal with Modbus interface	3.7 m/ *12.14 ft*	**990NAA26320**	0.300/ *0.661*
	15 m/ *49.21 ft*	**990NAA26350**	1.820/ *4.012*

5

6

Contents

6 - Quantum safety architectures

Safety PLCs

- **Presentation** ..... *page 6/2*

Safety architectures

- **Safety architectures**
  - Presentation ..... *page 6/10*
  - Collaborative architecture ..... *page 6/13*
- **Hot Standby safety architectures**
  - References ..... *page 6/17*

Safety CPUs

Safety CPU selection guide ..... *page 6/18*

- **Description** ..... *page 6/20*
- **References** ..... *page 6/23*

Safety I/O modules

Safety I/O module selection guide ..... *page 6/24*

- **Presentation** ..... *page 6/26*
- **Description** ..... *page 6/32*
- **References** ..... *page 6/33*

Non-interfering modules

Non-interfering module selection guide ..... *page 6/34*

- **References** ..... *page 6/38*

Unity Pro XL Safety software

- **Presentation, functions** ..... *page 6/40*
- **References** ..... *page 6/43*

6

Modicon Quantum automation platform
Safety PLCs

For more detailed information about the installation, use and maintenance of a system in accordance with the requirements of standard IEC 61508, refer to the "*Quantum Safety PLC, Safety Reference Manual*", 02/2015, reference 33003879.06, which has been approved by TÜV Rheinland *and* is available on our website **www.schneider-electric.com**.

Unity Pro

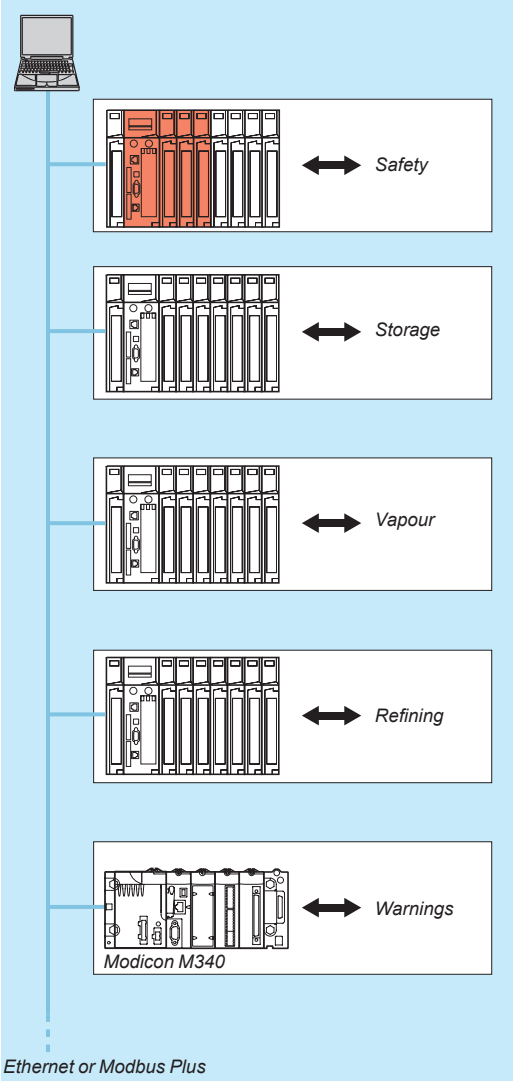

The same programming software and communication and system hardware components for both the safety and the automation functions

Presentation

Because of the potential for serious human, financial and environmental consequences of an industrial accident, safety is becoming an increasingly important factor for companies. It is not only a question of protecting employees and local residents but also of protecting production tools and the environment, and all within the terms of the applicable legislation. New safety challenges are being added to the more traditional industrial challenges of reducing operating costs and optimizing production costs.
In response to these new demands, Schneider Electric has developed a safety PLC offer based on the Modicon Quantum range. This Quantum safety PLC offer has been certified by TÜV Rheinland Group according to IEC 61508 for use in applications requiring a level of safety up to and including SIL3.

Integration of certified safety functions and Hot Standby mode in a single configurable PLC platform, which can all be programmed using a common tool, makes the Quantum safety PLC offer unique on today's automation market.
This offer can be used to create simple, standard safety architectures with:
- In-depth internal diagnostics at I/O management level
- Type 1oo2 CPU internal architecture
- No external voting function or additional hardware components required to guarantee the safety level

Since the safety part is integrated in the PLC itself, the I/O wiring is the same as that of standard PLCs.
The safety architectures are identical to standard Modicon Quantum architectures. They use:
- Standard remote I/O system
- CRP/CRA RIO modules providing wiring redundancy between the remote racks and the main rack
- A standard wiring system
- Standard Quantum backplanes
- A standard redundant power supply
- A Hot Standby architecture similar to that of the standard Quantum Hot Standby, which is very easy to wire and requires no special software development

Target applications

SIL3 certified Quantum Safety Unity CPUs are the ideal solution for industrial control processes.
They have been certified for use in the following applications in particular:
- Emergency Shut Down (ESD) systems
- Burner control systems
- *Fire and Gas* applications, fire alarm and detection system
- Safety machines

Process safety: General

Safety system

A system is considered to be functionally "safe" if the causes of random or systematic failures do not lead to malfunctioning of the system and do not result in injury or death, loss of equipment or pollution of the environment.

Safety Instrumented System (SIS)

A Safety Instrumented System is an independent system of sensors, logic controllers (SIL3 certified Quantum PLCs for example) and actuators designed to place the process in a safe state if the predefined conditions for safe operation are violated.

Process safety: General (continued)

Safety Integrity Level (SIL)

Safety Integrity Level (SIL) has become a synonym for functional safety.
SIL defines the level of performance or reliability of an electrical or electronic system in terms of its safety. Hence, the SIL is an indicator of a system's ability to perform safety-related tasks.

Safety standards (IEC 61508 and IEC 61511)

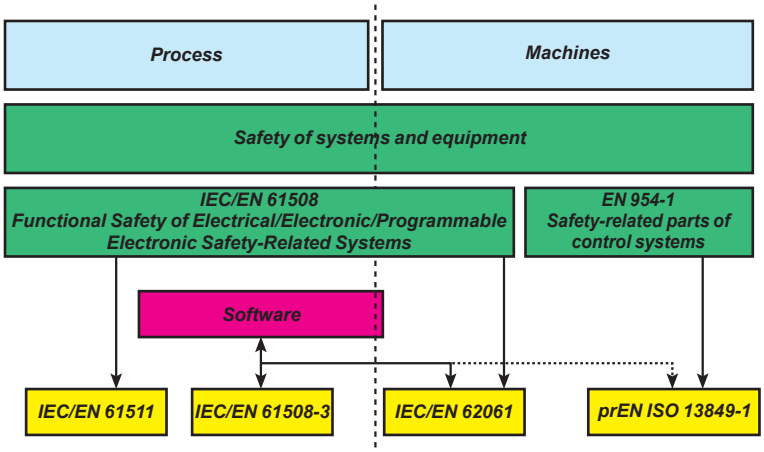

Standard IEC 61508 “Functional Safety of Electrical/Electronic/Programmable Electronic Safety-Related Systems” was published in 1998 and validated in 2002. This safety standard was the first to define safety requirements for control systems independently of the application. IEC 61508 is a technical standard covering the functional safety of electrical or electronic equipment. A system is said to be safe if it performs one or more specific functions in such a way as to keep any risks to an acceptable minimum. Such functions are defined as being safety functions.

IEC 61508 contains general requirements for minimizing the following risks:
- Incorrect specifications of the system, hardware or software
- Omissions in the specifications
- Random failures of hardware
- Systematic failures of hardware and software
- Common cause failures
- Environmental influences (e.g. electromagnetic, temperature, etc.)
- Supply system voltage disturbances

While IEC 61508 is primarily intended for manufacturers of components for protecting equipment and products, standard IEC 61511,
Functional Safety – Technical Safety Systems for the Process Industry, is aimed at users and designers of safety equipment.
IEC 61511 provides recommendations and is designed to help assess the risk of damage to installations as well as facilitate the selection of safety components.
IEC 61511 is specific to industrial processes:
- It is widely applied to safety instrumented systems.
- It is aimed primarily at system designers, integrators and users of safety systems or equipment.

TÜV Rheinland

TÜV is a group of companies specializing in authorizing IEC 61508 certification. One of these companies, TÜV Rheinland (Germany), is a world-renowned leader in safety-related systems.
Recognized as one of the world's best certification agencies, TÜV Rheinland has the backing of both insurance companies and governments.

Certifications and standards

The Modicon Quantum safety PLC offer has been certified by TÜV Rheinland for use in applications requiring a level of safety up to and including SIL3.

This certification means that Modicon Quantum Safety PLCs conform to the following standards:
- IEC 61508 second edition: Functional safety of electrical/electronic/programmable electronic safety-related control systems, Part 1-7, second edition, September 2012
- IEC 61131: PLCs: Part 2: Equipment requirements and tests: second edition, February 2003
- Protection of boilers:
  - European standards: EN 50156
  - USA standards: NFPA 85 and NFPA 86
- EN 54-2: Fire detection and fire alarm systems
- EN 298: Automatic gas burner control systems (with or without fans)
- Safety of machinery: IEC 62061 and EN ISO 13849

Modicon Quantum Safety PLCs also meet the requirements of the following certifications:
- UL
- CSA
- CE.
- Hazardous Locations
- ATEX, depending on the model (see pages 8/2 to 8/9)

Training

With more than 30 years' experience in control and supervision of critical processes, Schneider Electric offers you its most experienced safety experts through its support and consulting services.

In collaboration with your teams, they estimate the risk, determine reasonably foreseeable parameters for it and, if a safety system needs to be installed, specify the required SIL. They can also take responsibility for designing the architecture and specifying the associated safety functions. Finally, they will be able to guide you through the process of getting the system and the application certified.

- Functional safety training
- Risk and hazard analysis
- Definition of safety functions and required SIL
- Design of safety system architecture and specification of safety functions
- Assessment of level of intrinsic safety
- Technical support for development
- Control of the safety system acceptance test
- Assistance with application startup
- Assistance with preventive maintenance

Modicon Quantum automation platform
Safety PLCs

Safety CPUs and modules

The Modicon Quantum safety offer comprises five references: two CPUs and three I/O modules, and also uses power supply module **140CPS12420**.
These products are certified for use in safety applications up to and including SIL3:

Safety CPU	**140CPU65160S**
Hot Standby safety CPU	**140CPU67160S**
Safety discrete inputs	**140SDI95300S**
Safety discrete outputs	**140SDO95300S**
Safety analog inputs	**140SAI94000S**
Power supply	**140CPS12420** *(1)* **140CPS12420C** **140CPS22400** **140CPS22400C**

Description of the safety loop

The safety loop into which the Quantum safety PLC is integrated consists of the following 3 parts:
- Sensors
- Quantum safety PLC
- Actuators

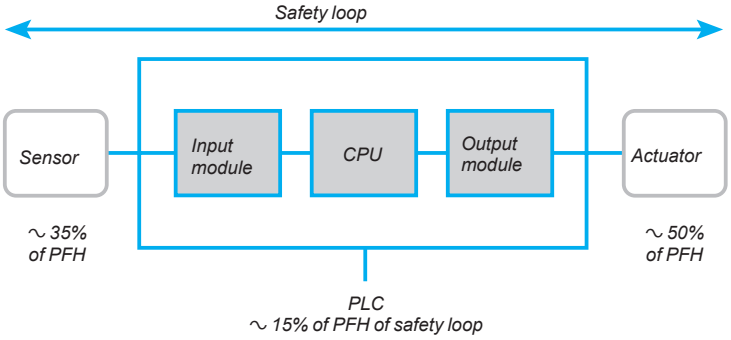

Probability of failure PFD, PFH

As far as SIL3 applications are concerned, standard IEC 61508 defines the probability of failure on demand (PFD) or the probability of failure per hour (PFH), depending on the system's mode of operation:
- $10^{-4} \leqslant PFD < 10^{-3}$ in a low-demand mode of operation
- $10^{-8} \leqslant PFH < 10^{-7}$ in a high-demand mode of operation

The Quantum safety PLC has been certified for use with both low and high-demand systems.
In terms of calculating the PFD/PFH values for a typical system, the maximum permissible value for the PLC is generally 15%. The PFD/PFH values for Quantum safety modules, for PTI values *(3)* of 5 and 10 years, are given in the following table:

	Reference	PTI = 5 years		PTI = 10 years	
		PFD ($x10^{-5}$)	PFH ($x10^{-9}$)	PFD ($x10^{-5}$)	PFH ($x10^{-9}$)
Safety CPU	**140CPU65160S**	4.9	5.1	9.9	5.6
Hot Standby safety CPU	**140CPU67160S**	4.9	5.1	9.9	5.6
Safety discrete inputs	**140SDI95300S**	0.3	1.9	0.6	1.9
Safety discrete outputs	**140SDO95300S**	0.4	1.2	0.7	1.2
Safety analog inputs	**140SAI94000S**	0.4	1.4	0.9	1.4
Power supply	**140CPS12420** *(2)*	–	–	–	–
Power supply	**140CPS22400** *(2)*	–	–	–	–

(1) Non-interfering module certified by TÜV Rheinland, please consult our website www.schneider-electric.com.
(2) The conformal coating version with "C" at the end of the reference has the same value.
(3) Proof Test Interval (see page 6/6).

PTI

Qualification testing is a process carried out at regular intervals that is designed to determine whether the system needs to be overhauled in its entirety or only partially. The PTI (*Proof Test Interval*) is the time interval between two qualification tests.

Example 1: Safety loop

With:
- 1 discrete input module
- 1 discrete output module
- 1 independent CPU

The Quantum Safety PLC is involved in the safety loop to the following extent:
0.2 + 1.1 + 0.2 = 1.5%.
The sensors and actuators account for 98.5%.

Example 2: Redundant safety loop

With 2 sensors:
- 2 redundant analog input modules
- 2 redundant discrete output modules
- 2 high-availability CPUs (Hot Standby)

The Quantum Safety PLC is involved in the safety loop to the following extent:
0.2 + 1.1 + 0.2 = 1.5%.
The sensors and actuators account for 98.5%.

***Note**: Each pair of identical modules is actually only represented once, as the sole purpose of redundancy is to increase availability.*
Therefore, only 1 module from each pair will be active within the safety loop.

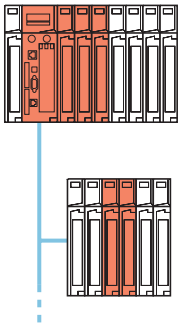

Unity Pro XLS supports a combination of safety I/O and non-interfering I/O.

Non-interfering modules

Certain I/O modules from the Quantum catalog can be used in a safety architecture without interfering with the safety process.
Unlike the safety modules, these modules, which are referred to as “non-interfering”, are not responsible for any safety functions.
The following is a list of Quantum non-interfering modules which are fully compatible with a Quantum Safety configuration *(1), and the corresponding conformal coating version for each modules are also compatible (2)*:

Type	Reference
RIO head adaptor	**140CRP93200**
RIO drop adaptor	**140CRA93200**
RIO drop optical fibre repeater	**140NRP95400**
	140NRP95401C
Ethernet module	**140NOE77111**
16-slot rack	**140XBP01600**
10-slot rack	**140XBP01000**
6-slot rack	**140XBP00600**
Discrete inputs	**140DDI35300**
Discrete outputs	**140DDO35300**
Analog inputs	**140ACI04000**
Analog outputs	**140ACO02000**
Multifunction input module	**140ERT85420**
40-way terminal block	**140XTS00200**
	140XTS00100
Optical repeater	**140NRP95400**

Treatment for severe environments

Safety CPUs **140CPU6●160S** and safety I/O modules **140SD●95300S** and **140SAI94000S** have a “Humiseal 1A33” coating which makes them suitable for operation in severe environments (see page 8/2).
Non-interfering modules and racks compatible with safety PLCs are also available in a Conformal Coating version with the same treatment (see pages 8/2 to 8/9).

These modules and racks with protective coating have an additional letter “**C**” at the end of the reference of the standard module.

(1) Non-interfering modules certified by TÜV Rheinland, please consult our website www.schneider-electric.com.
*(2) Except for 40-way terminal block **140XTS00200**, **140XTS00100**.*

Unity Pro XL Safety programming software

Quantum Safety PLCs are programmed with the Unity Pro XL Safety software.
This programming tool is compatible with various Schneider Electric PLC ranges (Modicon M340, Modicon Premium, Standard Modicon Quantum, Safety Modicon Quantum). Ethernet and Modbus Plus can be used to establish a connection not only with other PLCs (both safety PLC and standard PLC), but also the supervision system.
In order to meet the requirements of standard IEC 61508, certified programming software must be used to program the safety applications.
That is why Schneider Electric has developed a special safety version of its programming software: Unity Pro XLS (XL Safety).
Not only does this version of Unity Pro support fault diagnostics, but it also ensures that the project is protected to the extent necessary for programming a safety application.
Unity Pro XLS can be used to generate both safety applications and standard applications.
Therefore, you only need to install one version of the programming software on your PC.
For further information, see page 6/40.

Floating point instructions

Unity Pro XLS version 4.1 or later enables floating point format numerical instructions to be used for programming safety applications.

Differences between Quantum safety PLCs and standard Quantum PLCs

The Quantum safety PLC differs from the standard Quantum PLC in terms of its functions and behaviour in order to meet the requirements of standard IEC 61508.

Characteristic	Quantum standard PLC	Quantum safety PLC
Configuration	■ Backplane ■ Local rack ■ Remote I/O ■ All power supplies ■ Backplane extensions ■ Distributed I/O ■ I/O on a fieldbus	■ Backplane ■ Local rack ■ Remote I/O ■ Dedicated power supply
Firmware	Standard	Safety
Software	■ Unity Pro XLS ■ Unity Pro XL ■ Unity Pro L	Unity Pro XLS
User logic	■ FBD ■ LD ■ IL ■ ST ■ SFC	■ FBD ■ LD
Data types	■ EDT ■ DDT	■ EDT ■ Simple arrays only
Mode	–	■ Maintenance mode ■ Safety mode
Restart behaviour	■ Start from stop ■ Cold restart ■ Warm restart	■ Start from stop ■ Cold restart
Safety mode	No	Yes
Minimum MAST execution time in cyclic mode	3 ms	20 ms
Forcing in safety mode with key-switch locking	No	Yes
Memory check	No	Yes
Password	No	Yes
MSTR blocks	Yes	No
Global Data subscription (Ethernet)	Access to all areas	Access to unrestricted area only
Read I/O scanner (Ethernet)	Access to all areas	Access to unrestricted area only
PCMCIA cards	Slots A and B	Slot A

***Note**: The Quantum safety PLC can only perform a cold start: the application is reinitialized on each start.*
The Quantum safety PLC can run in cyclic or periodic mode.

Ethernet and Modbus Plus communication

General principle

There are no restrictions in terms of sending information to an external PLC or HMI terminal, regardless of the Ethernet or Modbus Plus network used or the protocol implemented. However, information can only be received (written to the safety PLC) in the “unrestricted” memory area *(1)*.

PLC-to-PLC communication

The Quantum safety PLC can communicate with other PLCs via:
- Modbus TCP. CPU connection or module **140NOE77111/140NOE77111C**
- Modbus Plus (CPU serial port), server only
- Modbus RS232/RS485 (CPU serial port)

This communication method is certified for use in safety loops.These communication methods are classed as “non-interfering”.

Ethernet communication

The Ethernet network connects:
- Via the CPU Ethernet port
- Via an Ethernet module **140NOE77111/140NOE77111C**

Note: With a Hot Standby safety CPU, the Ethernet port is reserved for data exchange between the primary and standby PLCs.

Ethernet module **140NOE77111/140NOE77111C** has been certified as a non-interfering product for use with a Quantum safety PLC.
Both peer-to-peer and Global Data communication are supported. All standard Ethernet components can be used for the wiring.

Ethernet peer-to-peer communication

Using Unity Pro XLS, this type of communication is defined separately for the read and write directions in the Ethernet network configuration. Unity Pro XLS checks that the read data only uses (is only written to) the “unrestricted” memory area *(1)*.

Ethernet Global Data communication

Global Data communication is configured within the Ethernet network configuration in Unity Pro XLS so that write data can be published and read data can be subscribed to.
Read data may only be sent to the “unrestricted” memory area *(1)*.

Modbus Plus communication

On a Modbus Plus network, the Modbus Plus port on the CPU is used for peer-to-peer communication and Global Data exchange.

Peer-to-peer communication on Modbus Plus

Using Unity Pro XLS, this type of communication is defined separately for the read and write directions in the Modbus Plus network configuration. Unity Pro XLS checks that the read data only uses (is only written to) the “unrestricted” memory area *(1)*.

Global Data communication on Modbus Plus

Global Data communication is defined within the Modbus Plus network configuration in Unity Pro XLS so that write data can be published and read data can be subscribed to.
Read data may only be sent to the “unrestricted” memory area *(1)*.

(1) For details of the safety memory and unrestricted memory, see page 6/22.

Communication with HMI terminals

An HMI terminal is permitted to read data from the Quantum safety PLC, but may only write data to the “unrestricted” memory area *(1)* via:
- Modbus TCP: either via the CPU port, or via module **140NOE77111**
- Modbus Plus
- Modbus RS232/RS485

As this type of communication is not defined with Unity Pro XLS, it is the Quantum safety PLC that is responsible for protecting itself against write access attempts by the HMI terminal: any attempt to send a write command to the safety memory *(1)* will be ignored.

Writing in maintenance mode

Even in maintenance mode, write protection prevents data being written to the safety memory by other PLCs or HMI terminals.

It is only possible to change to maintenance mode using Unity Pro XLS and after entering a password. The data in this area can be modified or adjusted with Unity Pro XLS or an OPC data server in maintenance mode:
- Modification of program logic
- Assignment of values
- Forcing of values
- Debugging

PC-to-PLC communication

Communication between Unity Pro XLS and the Quantum safety PLC takes place via:
- Modbus TCP. CPU port or NOE module
- Modbus Plus
- Modbus RS232/RS485
- USB

Even if communication between Unity Pro XLS and the Quantum safety PLC is not integrated into the safety loop, it is still subject to checks (e.g. a CRC) to ensure that the data is transferred correctly and that no communication errors occur.

(1) For details of the safety memory and unrestricted memory, see page 6/22.

Modicon Quantum automation platform
Safety architectures

Introduction

Quantum safety PLC architectures feature the same flexibility and high availability benefits as standard Quantum PLC architectures.

Flexible architectures

"1oo2" CPU architectures

Example of architecture with redundant or non-redundant safety I/O *(1)*

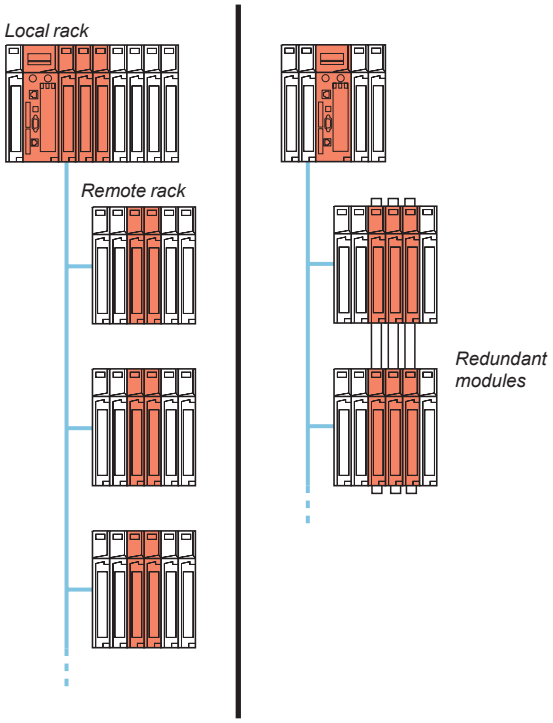

Standard architecture with non-redundant safety I/O

Standard architecture with redundant safety I/O placed in 2 separate RIO drops

These architectures use the **140CPU65160S** CPU.

(1) For more information about topologies with a single cable, see page 2/27.

Modicon Quantum automation platform
Safety architectures

Flexible architectures (continued)

Hot Standby safety architectures:
"1oo2 Hot Repair" CPU architectures

With Hot Standby safety architectures:
- System availability can be increased significantly
- Process downtimes can be eliminated because of the redundant CPUs
- Redundancy is possible at every level within the architecture: CPU, wiring, power supply, I/O, etc.

The Hot Standby system is compatible with Unity Pro XL Safety software, and provides Quantum safety CPUs with the high level of availability required by the the most demanding applications, in terms of their control/command system.

At the centre of the system are two Quantum safety PLC racks, commonly known as the "Primary" PLC and the "Standby" PLC.
Their hardware configurations must be identical (same modules in each local rack).
The key element, on each of them, is the **140CPU67160S** CPU, which is specially designed for Hot Standby architectures with the Unity Pro XL Safety software. This CPU is a double-slot module, which combines the central processor unit function with that of the redundant coprocessor in the same housing.

The "Primary" PLC executes the application program and controls the I/O. The "Standby" PLC stays in the background, ready to take over if necessary. The "Standby" PLC is connected to the "Primary" PLC via a high speed optical fibre link (100 Mbps) integrated in the CPU.
This optical fibre link (62.5/125 µm multimode) can be extended to 2 km without any special additional equipment. It is via this that the user application data is updated cyclically on the "Standby" PLC.

In the event of an unexpected failure affecting the "Primary" PLC, the standby system switches over automatically, changing execution of the application program and control of the I/O over to the "Standby" PLC, with an up-to-date data context.
Once the changeover is complete, the "Standby" PLC becomes the "Primary" PLC.
Once the faulty PLC has been repaired and reconnected to the standby system, it takes the role of the "Standby" PLC.

Using the Hot Standby system with Unity Pro XL Safety means a smooth changeover from normal to standby at the outputs. The changeover is transparent for the process, which will continue to be managed without any permanent ill-effects from the occurrence of a hardware failure.
The Hot Standby system with Unity Pro XL Safety software therefore increases productivity by minimizing downtime.

Modicon Quantum automation platform
Safety architectures

Flexible architectures (continued)

Example of architecture with redundant or non-redundant safety I/O

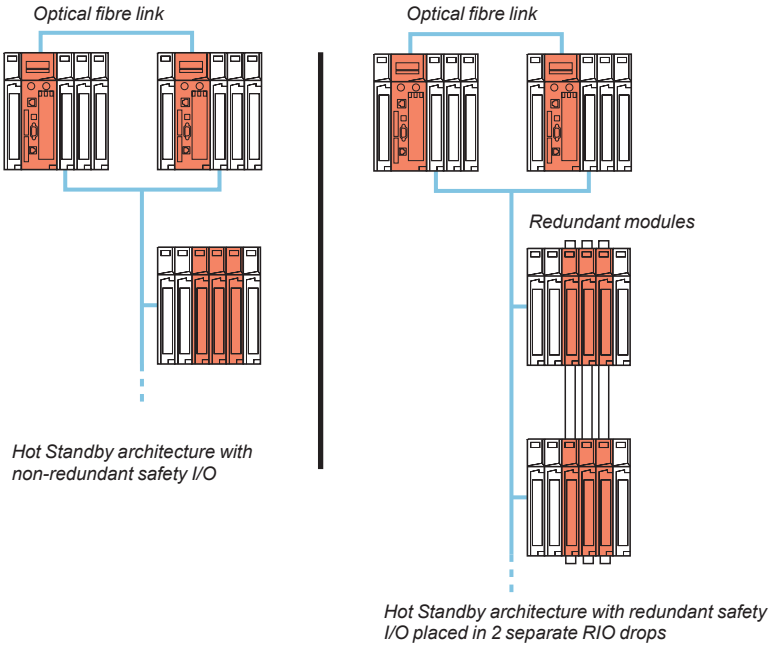

"1oo2 Hot Repair" architecture

A Hot Standby architecture enables safety and availability to be combined in a single PLC. This type of architecture ensures that even if one of the CPUs fails, the system still provides SIL3 safety. Since Quantum safety PLCs are based on the same Hot Standby architecture as standard Quantum PLCs, the solution is indisputably robust and has proved its worth in the field.

As a result of the "1oo2" design of safety CPUs (see page 6/20), they represent a simple and cost-effective solution compared to multiprocessor solutions with 3 CPUs and voting for control between one another with external equipment. The complete redundancy of functions, from the I/O through to the supervision system, has the advantage of being able to tolerate more than one error while still maintaining the required level of functional safety.

Particularly well suited to designing production systems which combine safety with availability and cost-effectiveness, the solution is the at the heart of the TÜV Rheinland **"1oo2 Hot Repair"** architecture concept.

Details

These architectures use two **140CPU67160S** connected via optical fibre link. The safety I/O modules are placed in the RIO drops so that they can be controlled by both CPUs *(1)*.

The Quantum safety high availability CPU differs from the standalone CPU **140CPU65160S** in its use of the Ethernet port. In a standalone configuration, the Ethernet port is used for communication with other devices via standard Ethernet cables. In a high availability safety configuration, it is used for data exchanges between the primary and standby controllers via optical fibre link. Since this optical fibre link is not part of the safety loop, the PFD and PFH values for the high availability CPU are the same as those for the standalone CPU.

(1) For more information on the connections, see page 2/39.

Modicon Quantum automation platform

Safety architectures

Collaborative architecture

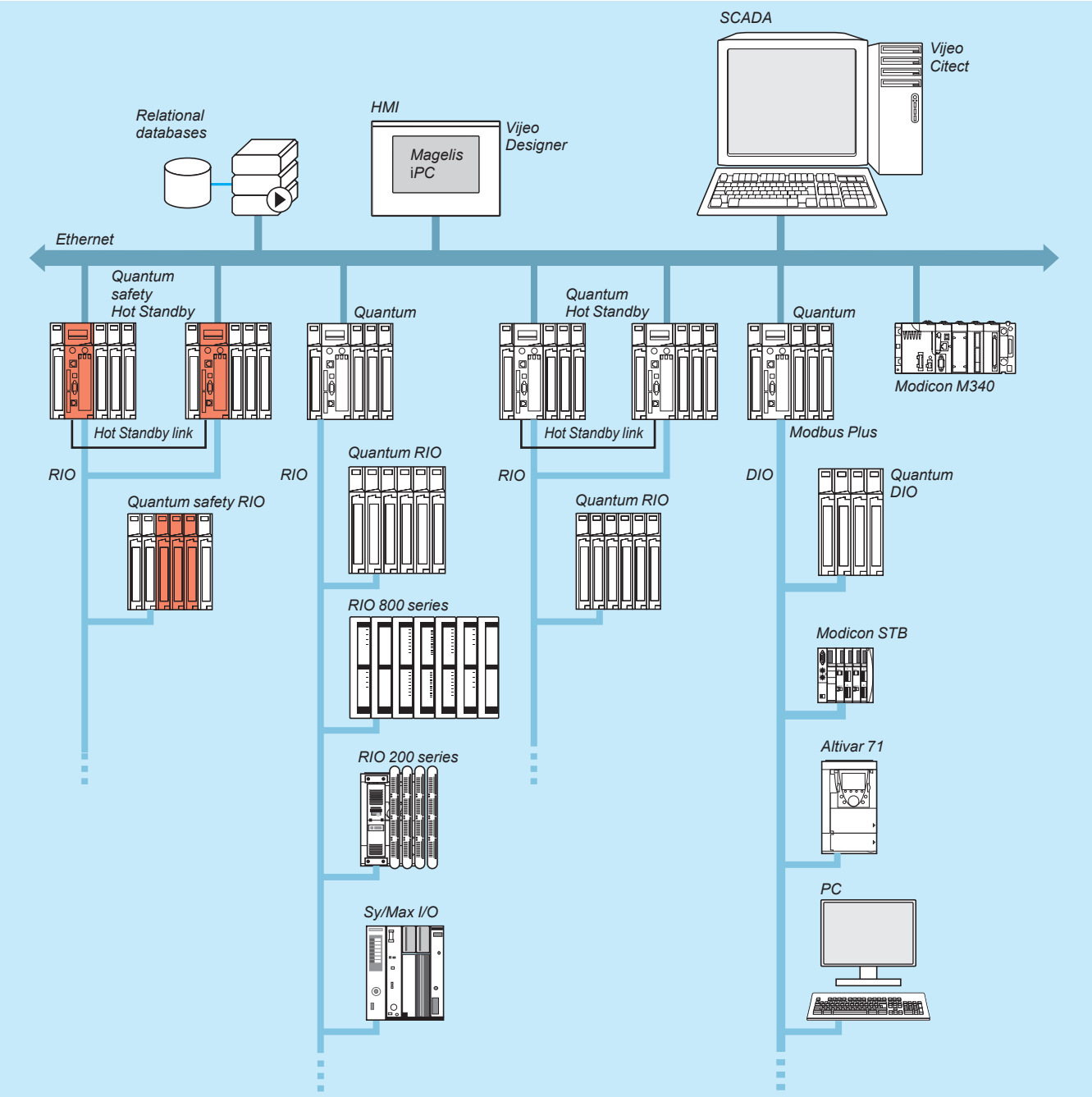

The Quantum safety PLC is easy to use in a collaborative architecture:
- The same software tool is used for both the safety and the control PLCs
- The safety PLC has all the necessary protection against write operations from other equipment in the architecture

Modicon Quantum automation platform
Safety architectures

High availability functions

The following functions are available for high availability, in maintenance mode and safety mode:

Function	Maintenance mode	Safety mode
High availability	Yes	Yes
Role exchange	Yes	Yes
Role exchange by EFB	–	Yes
Key switch	Yes	Yes
Different logic	Yes	–
OS loading	Yes, if secondary PLC is in stop mode and disconnected	–
Application transfer	Yes	Yes, via CPU keyboard

Safety I/O modules in high availability configurations

Safety I/O modules can be used in a redundant way to increase control system availability.
Schneider Electric offers function blocks for supervising the state of a configuration with redundant modules.
The state of the modules is available in system words, which can be made available to operators and maintenance staff to inform them that a module is faulty and must be changed.

To increase the availability of the system, Schneider Electric recommends using different remote I/O racks for redundant I/O modules.

Analog input modules

2 different sensors must be used for a high availability safety analog input and each must be connected to a different input channel.
It is advisable to locate these 2 input channels on different analog input modules.

Block diagram:

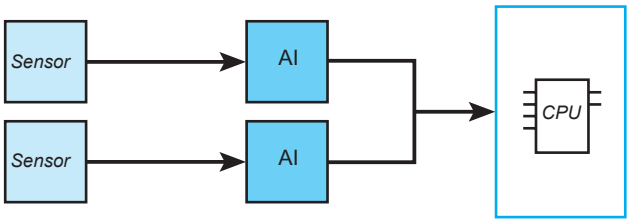

Function block S_AISIL2 can be used for selecting data from the 2 redundant analog inputs and to supervise the state of the inputs.

Modicon Quantum automation platform

Safety architectures

Discrete input modules

Redundant safety discrete inputs can be connected to 1 or 2 sensors. The 2 input channels should preferably be located on different input modules.
If a single sensor is used, the modules share the same process power supply. The wiring must be defined to suit the conditions of use of the modules (input characteristics on short circuit, open wire, 0 and 1 logic levels, voltage and current) as specified in the Quantum Hardware Reference Guide.

Block diagrams:

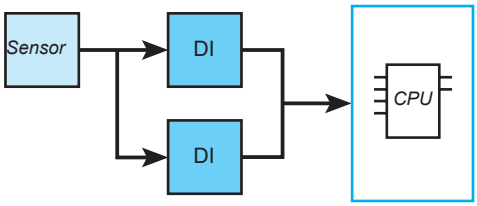

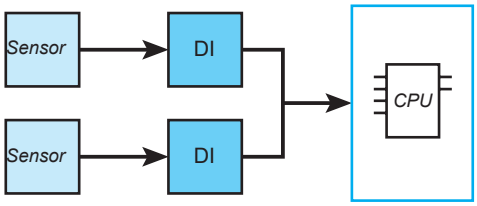

Function block S_DISIL2 can be used for selecting data from the 2 redundant discrete inputs and to supervise the state of the inputs.

Discrete output modules

For high availability discrete outputs, the 2 outputs must be on separate modules, wired in parallel and connected to 1 actuator.

Block diagram:

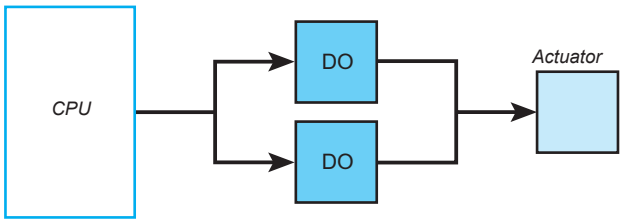

A function block is not necessary because the same signal from the CPU is connected to both outputs.

Modicon Quantum automation platform

Hot Standby safety architectures

Hot Standby safety architecture

Remote I/O architecture (RIO)

These I/O drops, consisting of Quantum modules, are recognized and configured from the Unity Pro XL Safety software programming environment.

They feature synchronous scanning in relation to the scan time.

A splitter box 5 **MA0186100** is used to enable I/O exchanges between the RIO drops 4 and the "Primary" 1 and "Standby" 2 PLCs.
The line impedances 6 **520411000** are used to maintain a suitable line when it is necessary to disconnect one of the I/O CPUs. The optional earthing terminals 7 **600545000** are used to maintain the earthing of the coaxial cable in these conditions.

The availability of this I/O system is reinforced by using a dual-medium I/O wiring system.

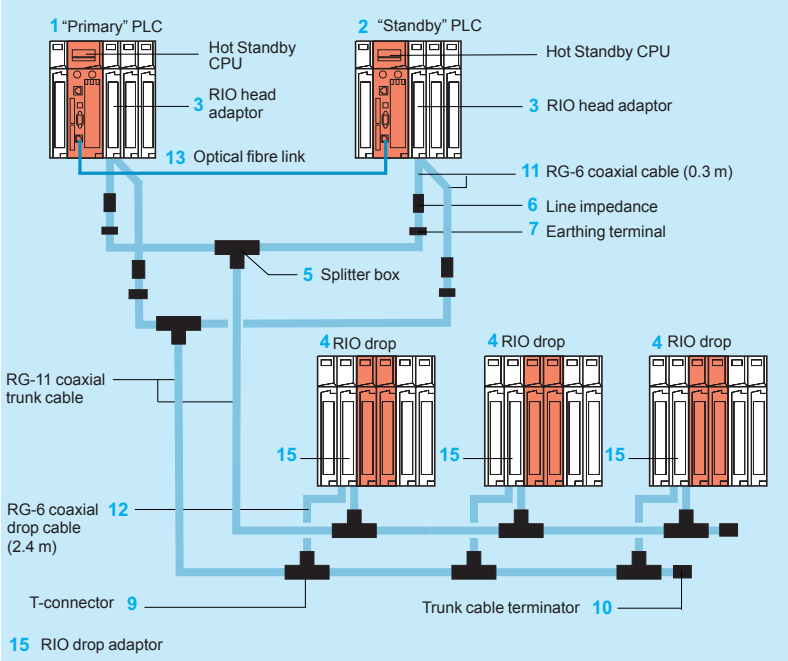

***Note**: For items 1 to 15, see page 6/17.*

The components are available in kits.
For example, the configuration illustrated above can be created using:
- 1 splitter kit **140CHS32000**
- 4 head adaptor connection kits **RPXKITCRP**
- 6 drop kits **RPXKIT6F**
- 1 RG-11 coaxial trunk cable: for example, a 320 m reel **975951000** (see page 2/31)

Modicon Quantum automation platform

Hot Standby safety architectures

140CPU67160S

References

Hot Standby safety CPU with Unity Pro XL Safety

Hot Standby CPU		Application memory (max.)		Optical fibre	Communication ports	Safety	Reference	Weight
Clock speed	Coprocessor	Available internal RAM (with located variables)	With PCMCIA card	Type and max. distance				
MHz		KB	KB					kg/ lb
266 MHz	Yes, integrated Ethernet TCP/ IP, use reserved for Hot Standby	1024	7168	multimode 2 km	1 Modbus *(1)* 1 Modbus Plus 1 USB 1 Ethernet 100 Mbps port (dedicated Hot Standby port)	Yes	**140CPU67160S**	–

140NOE77111

Associated modules

Description	Type of architecture	Topology	Transparent Ready	No. *(2)*	Safety	Reference	Weight kg/ lb
RIO head adaptor	Remote I/O (RIO) and mixed I/O	Redundant cable	–	3	Non-interfering	**140CRP93200** **140CRP93200C**	–
RIO drop adaptor				15	Non-interfering	**140CRA93200** **140CRA93200C**	–
RIO drop optical fibre repeater*(3)*	Remote I/O (RIO)	Multimode optical fibre (single or redundant)	–	–	Non-interfering	**140NRP95400** **140NRP95400C**	–
		Single mode optical fibre (single or redundant)	–	–	Non-interfering	**140NRP95401C**	–
Ethernet Modbus/TCP network module	Mixed	Bus or ring (copper or optical fibre)	Class C30	–	Non-interfering	**140NOE77111** **140NOE77111C**	–

(1) RS 232/RS 485 Modbus port.
(2) For item numbers, see page 6/16.
(3) Module can be declared and configured in Unity Pro XLSafety version 7.0 and later. This module can however be used with earlier versions of Unity Pro XLS without being declared.

***Note**: For all accessories and connections, see page 2/35.*

Modicon Quantum automation platform
Safety CPUs

Automation platform for Unity Pro XL Safety software offer		Safety applications	High-availability (Hot Standby) safety applications
Number of racks 3/4/6/10/16 slots	Local I/O	1 main rack	1 main rack
	Remote I/O (RIO)	31 drops x 1 rack	31 drops x 1 rack
Maximum discrete I/O	Local I/O	No limit (max. 13 slots)	No limit (max. 13 slots)
	RIO on S908 bus *(1)*	31,744 input channels and 31,744 output channels	31,744 input channels and 31,744 output channels
Maximum analog I/O (1)	Local I/O	No limit (max. 13 slots)	No limit (max. 13 slots)
	RIO on S908 bus *(1)*	1984 input channels and 1984 output channels	1984 input channels and 1984 output channels
Application-specific modules		–	–
Number of communication modules (in local rack)	Ethernet TCP/IP	6 Ethernet 140 NOE 771 11 modules on local rack	6 Ethernet 140 NOE 771 11 modules on local rack
Bus connections	Modbus	1 integrated RS 232/485 Modbus slave RTU/ASCII port	1 integrated RS 232/485 Modbus slave RTU/ASCII port
	AS-Interface actuator/sensor bus	–	–
	Profibus DP	–	–
Network connections	Modbus Plus	1 integrated port	1 integrated port
	Ethernet TCP/IP	1 integrated port (10BASE-T/100BASE-TX), 6 “option” modules on local rack	1 integrated port (10BASE-FX reserved for Hot Standby), 6 “option” modules on local rack
	USB	1 port reserved for programming PC	1 port reserved for programming PC
Process control	Control loops	–	–
Redundancy		Power supplies, remote I/O network, Ethernet TCP/IP modules	Power supplies, remote I/O network, Ethernet TCP/IP modules
Hot Standby CPU		–	Yes
Application structure	Master task	1 cyclic/periodic (20 ms min.)	1 cyclic/periodic (20 ms min.)
	Fast task	–	–
	Auxiliary tasks	–	–
	Interrupt tasks	–	–
Number of Kinstructions executed per ms	100% Boolean	5.14 Kins/ms	5.14 Kins/ms
	65% Boolean and 35% numeric	5.03 Kins/ms	5.03 Kins/ms
Bus current required		2760 mA	2500 mA
Memory capacity without PCMCIA card	IEC program and data	1024 KB	1024 KB
Memory expansion with PCMCIA card	Program	Up to 7168 KB	Up to 7168 KB
	Data	1024 KB	1024 KB
	File storage	–	–
Functional safety certification		Certified by TÜV Rheinland as suitable for use in an SIL3 level safety function	Certified by TÜV Rheinland as suitable for use in an SIL3 level safety function
Approvals		CE, UL, CSA, CSA Hazardous Location Class 1 Div 2, ATEX Zone 2/22 *(2)*	CE, UL, CSA, CSA Hazardous Location Class 1 Div 2, ATEX Zone 2/22 *(2)*
Type of Quantum CPU		**140CPU65160S**	**140CPU67160S**
Pages		6/23	6/23

(1) The maximum values for the number of discrete I/O and analog I/O are not cumulative.
(2) Only “Conformal Coating” versions, depending on the model, are certified ATEX Zone 2/22. For further information, see pages 8/2 to 8/9.

Modicon Quantum automation platform
Safety CPUs

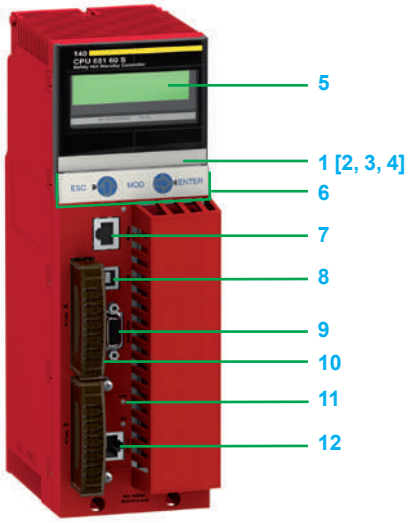

140CPU65160S

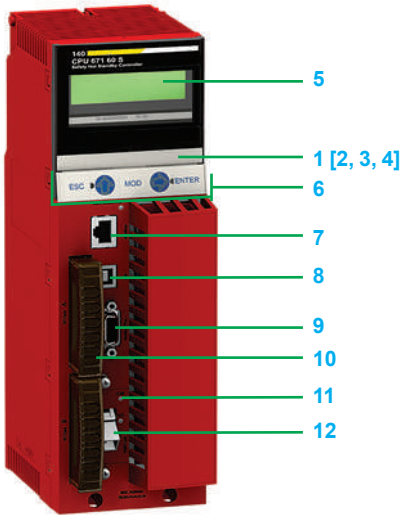

140CPU67160S

Description
Safety CPUs

140CPU65160S and **140CPU67160S** CPUs have the following on the front panel:

1 An LCD display cover, providing access to:

2 A key switch:
- Unlocked: all system operations can be invoked and all changeable module parameters can be modified by the operator via the LCD and keypad. The memory is not write-protected.
- Locked: no system operations can be invoked and all changeable module parameters are read-only. The memory is write-protected.

3 A backup battery slot *(1)*

4 A reset button (Restart)

5 An LCD display (2 lines of 16 characters) with brightness and contrast controls

6 A 5-button keypad with 2 LEDs *(ESC, ENTER, MOD, ⇧, ⇨)*

7 An RJ45 connector for connecting to the Modbus bus

8 A type B female USB connector for connecting the programming PC terminal

9 A 9-way female SUB-D connector for connecting to the Modbus Plus network

10 A slot for PCMCIA memory expansion cards (slot A)

11 Two LEDs:
- COM LED (green): activity on the Ethernet port (model **140CPU65160S**), activity on the Hot Standby primary or standby drop (model **140CPU67160S**)
- ERR LED (red): Ethernet frame collisions (model **140CPU65160S**), communication error between Hot Standby primary and standby drops (model **140CPU67160S**)

12 One connector:
- RJ45 for connection to the Ethernet network (model **140CPU65160S**)
- MT-RJ optical fibre connector for interconnecting the primary and standby PLCs in the Hot Standby architecture (model **140CPU67160S**)

(1) Internal RAM memory backup battery:
*- Product reference: **990XCP98000***
- Type: Lithium 3 V ⎓
- Capacity: 1200 mAh
- Storage life: 10 years

Modicon Quantum automation platform
Safety CPUs

Operating principles - CPUs

Quantum safety CPUs have two processors which use different technologies.
Each one executes its safety program in its dedicated memory area. The results are analyzed at the end of each scan by two comparison mechanisms.
Each processor has its own fallback algorithm, which allows the system to be set to a so-called safe position if something goes awry when a function is being executed or if an error is detected. This dual processing is called a 1oo2 architecture (One out of Two).
The diagram below shows the internal architecture of a Quantum safety CPU:

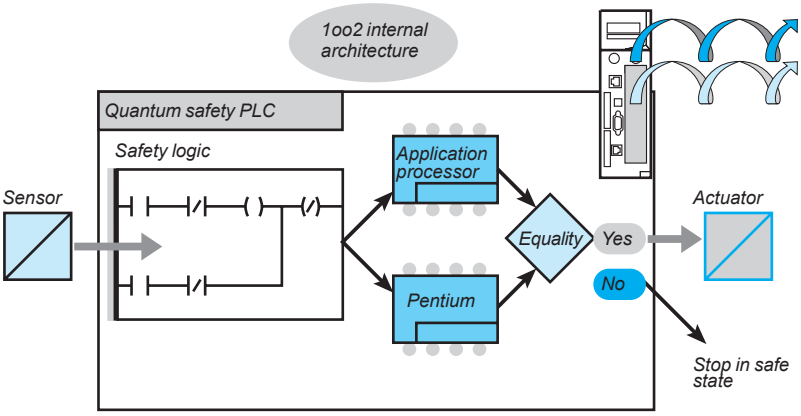

Switch to fallback position configured

Combining processors in this way allows dual code generation and execution, offering the following advantages if an error is detected:
■ Both executable codes are generated independently.
The diversity of compilers allows routine errors to be detected during code generation.
■ The two generated codes are executed by two different processors.
The PLC is therefore able to detect both routine errors during code execution and random errors.
■ Both processors use independent memory areas.
The PLC can therefore detect random errors in the RAM memory.

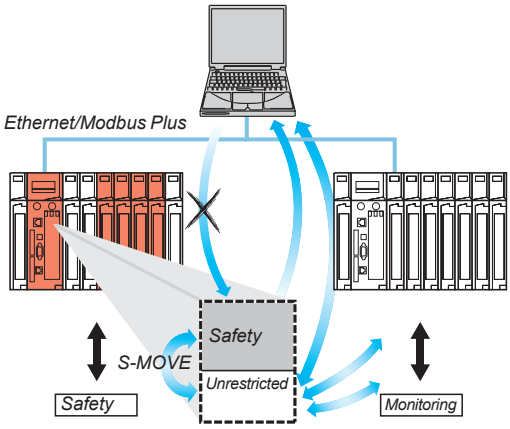

Only the S-MOVE function block is capable of reading in the unrestricted memory area.

Safety memory

The Quantum safety PLC memory is divided into a safety area and an unrestricted area.
The safety memory area is write-protected. It is used to process safety-related data.
The unrestricted memory area is not write-protected. It is used to communicate with external devices.
Values in this area cannot be manipulated directly, only via specific function blocks.
As far as slot A is concerned, PCMIA memory cards can be used in the same way as with a standard PLC. They can contain applications, not data files (see page 6/22).
However, slot B cannot be used for safety projects.

Specific operating modes

The Quantum safety PLC has 2 specific operating modes:
■ Safety mode
■ Application and PLC maintenance mode

Safety mode

This is the Quantum safety PLC's default operating mode, in which all the safety functions are available to control the process.
It is a “restricted function” mode in which modification and maintenance activities are prohibited.Only stopping or starting the PLC, or placing it in maintenance mode, is authorized.

Modicon Quantum automation platform
Safety CPUs

Specific operating modes (continued)

Maintenance mode

The Quantum safety PLC Maintenance mode is a temporary mode which is useful for modifying the project, debugging and maintaining the application program.
It provides the following functions:
- Changes can be downloaded
- Safety variables can be assigned and forced: limited to EBOOL variables
- It is possible to switch to safety mode while forcing is in progress

Memory structure

The application memory is divided into memory areas, physically distributed in the internal RAM memory and on 1 PCMCIA memory expansion card.

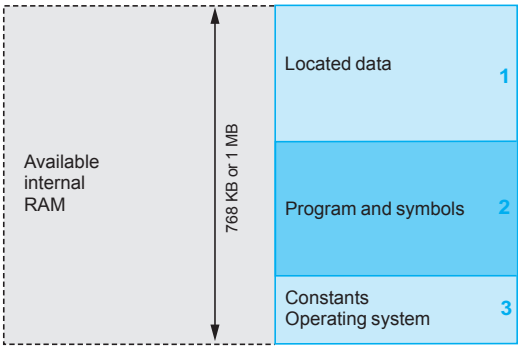

CPU without PCMCIA memory card

1 The application data area is always in the internal RAM.
It consists of global located data, corresponding to the data defined by an address (for example %MW237) with which a symbol can be associated.
2 Application program and symbols area in the internal RAM or in the PCMCIA memory card (descriptor, executable code for the tasks and application symbols database)
3 Constants area in the internal RAM or the PCMCIA memory card (constant words, initial values and configuration)

Depending on the requirements for application memory size, there are two possible ways to organize the memory according to whether or not the Quantum safety CPU is equipped with a PCMCIA memory expansion card:
- Application in the internal RAM, the application is entirely loaded in the internal RAM which is backed up *(1)* by the CPU (2 MB).
- Application in the PCMCIA card, the internal RAM is reserved for the application data. The PCMCIA memory card contains the program space (program, symbols and constants areas).

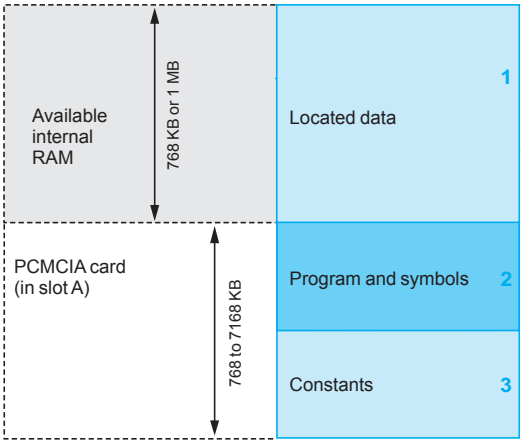

CPU with PCMCIA memory card in slot A

The presence of the symbols area with the program area is optional. The fact of having the application symbols database on the PLC means that, when it is connected to an empty programming PC (with no applications), all the elements needed to debug or upgrade this PLC are available.

Protecting the application

Whether located in the internal RAM or in the PCMCIA card, the application can be protected with a key switch (see page 6/20) in order to prohibit its access (read or modify program) online under Unity Pro XL Safety.

PCMIA cards for safety CPUs

Type	Program size KB	Data size KB	Reference
SRAM+FLASH	2048	1024	**TSXMCPC002M**
SRAM+FLASH	512	512	**TSXMCPC512K**
FLASH	1024	–	**TSXMFPP001M**
FLASH	2048	–	**TSXMFPP002M**
FLASH	4096	–	**TSXMFPP004M**
FLASH	512	–	**TSXMFPP512K**
SRAM	1024	832	**TSXMRPC001M**
SRAM	2048	1856	**TSXMRPC002M**
SRAM	3072	2880	**TSXMRPC003M**
SRAM	7168	6976	**TSXMRPC007M**
SRAM	1792	1600	**TSXMRPC01M7**
SRAM	768	576	**TSXMRPC768K**

(1) The internal RAM memory is backed up by a 3 V ⎓ lithium battery.

Modicon Quantum automation platform
Safety CPUs

140CPU65160S

140CPU67160S

TSXCUSB232

990NAD218●0

TSXCUSBMBP

Safety CPUs

Both these CPUs are certified by TÜV Rheinland as suitable for use in a safety function up to level SIL3. By default they have "Humiseal 1A33" coating which makes them suitable for operation in severe environments (see page 8/2).

CPU		Application memory (max.)		Communication ports	Optical fibre	Safety	Reference	Weight
Clock speed	Coprocessor	Available internal RAM (with located variables)	With PCMCIA card		Type and max. distance			
MHz		KB	KB		km			kg/ *lb*
266	Yes	768	7168	1 Modbus *(1)* 1 Modbus Plus 1 USB 1 Ethernet TCP/IP	multi-mode 2	Yes	**140CPU65160S**	–
		1024	7168	1 Modbus *(1)* 1 Modbus Plus 1 USB 1 Hot Standby port (100 Mbps) *(2)*	multi-mode 2	Yes	**140CPU67160S**	–

PCMCIA memory expansion cards

Quantum **140CPU65160S** and **140CPU67160S** CPUs can take 1 memory expansion card (see list on page 6/22).

Connection cables and accessories

Description	Use		Length m/ *ft*	Reference	Weight kg/ *lb*
	From processor	To PC port			
Connecting cables to the PC	Modbus port, RJ45 for: 140CPU6●160S	RJ45 connector	1/ *3.28*	**110XCA28201**	–
			3/ *9.84*	**110XCA28202**	–
			6/ *19.68*	**110XCA28203**	–
		USB port	0.4/ *1.31*	**TSXCUSB232** *(3)*	0.145/ *0.320*
	USB port for: 140CPU6●160S	USB port	3.3/ *10.83*	**UNYXCAUSB033**	–
Connection cables for Modbus Plus network	Modbus Plus port, 9-way SUB-D for: 140CPU6●160S Straight connector	Modbus Plus tap *(4)*	2.4/ *7.87*	**990NAD21810**	–
			6/ *19.68*	**990NAD21830**	–
Modbus Plus/USB converter	Modbus Plus tap *(3)*	USB port	0.4/ *1.31*	**TSXCUSBMBP** *(5)*	0.186/ *0.410*
Adaptor	RJ45 connector for 140CPU6●160S	RS 232 9-way SUB-D connector	–	**110XCA20300**	–

(1) RS 232/RS 485 Modbus port.
(2) Ethernet 100 Mbps port for multimode optical fibre.
*(3) With the **TSXCUSB232** converter, use the **110XCA20300** adaptor and the **110XCA2820●** cable.*
*(4) Modbus Plus tap: **990NAD23020/21** (IP 20) or **990NAD23010** (IP 65).*
*(5) With the **TSXCUSBMBP** converter, use the **990NAD21110/30** or **990NAD21810/30** cable.*

CPUs: page 1/2
I/O architectures: page 2/6
I/O: page 3/2
Communication: page 5/2

Modicon Quantum automation platform

Safety I/O modules

Type	Discrete I/O	
Voltage	24 V ⎓ inputs	24 V ⎓ outputs
Number of channels	16	
Number of groups	1	
Number of channels per group	16	
Logic	Positive *(sink)*	
I/O addresses	7 input words	4 output words and 7 input words
I/O characteristics	**Input limit values:** Voltage at state 1: 11...30 V ⎓ Voltage at state 0: 3...5 V ⎓ Current at state 1: ≥ 3.0 mA Current at state 0: ≤ 1.5 mA	**Max. load current:** Per point 0.65 A Per module: 10.4 A
Isolation between channels	–	
Bus current required	550 mA	350 mA
External power supply	19.2…30 V ⎓ *(1)*	
External fuse	Mandatory, 1 A fast-blow	Mandatory, 10 A max. fast-blow, dependent on the module load current
Functional safety certification	Certified by TÜV Rheinland as suitable for use in an SIL3 level safety function	
Approvals	CE, UL, CSA, CSA Hazardous Location Class 1 Div 2, ATEX Zone 2/22 *(2)*	
Model	**140SDI95300S**	**140SDO95300S**
Pages	6/33	

*(1) Always use an external sensor or preactuator power supply that does not reset automatically after breaking, type **ABL8RPS24100** in manual mode (24 V ⎓, 10 A).*

(2) Only "Conformal Coating" versions, depending on the model, are certified ATEX Zone 2/22. For further information, see pages 8/2 to 8/9.

Type	Analog inputs
Voltage	–
Number of channels	8
Number of groups	8
Number of channels per group	1
Logic	–
I/O addresses	13 input words
I/O characteristics	**Input range:** 4…20 mA **Resolution:** 16 bits (65536 points) **Update time:** 15 ms for all channels
Isolation between channels	500 V ∿ for 1 minute
Bus current required	400 mA
External power supply	–
External fuse	–
Functional safety certification	Certified by TÜV Rheinland as suitable for use in an SIL3 level safety function
Approvals	CE, UL, CSA, CSA Hazardous Location Class 1 Div 2, ATEX Zone 2/22 *(2)*
Model	**140SAI94000S**
Pages	6/33

Modicon Quantum automation platform
Safety I/O modules

140SDI95300S

Presentation

The Modicon Quantum automation platform offers a complete range of discrete I/O modules designed to interface with a wide variety of devices. All these modules comply with the internationally recognized IEC electrical standards, which ensure their reliability in severe environments.

Fully software-configurable

All Quantum safety I/O modules are configured using Unity Pro XL Safety software. Software allocation of the module I/O addresses simplifies adding or changing modules on the configuration, without intervention on the application program.

Definition of fault behaviour for an output module

The Quantum platform gives you the ability to predefine how a discrete output will behave in the event of a fault, if the module stops being controlled for any reason. The outputs can be configured by the software so that they will:
- Go to state 0
- Go to a predefined safe state
- Stay in the same state as at the time of the fault

The safe state is: de-energized.
In the event of an internal module fault, the relevant channel(s) is(are) deactivated (set to 0).
The behaviour in the event of a fault can be defined for each output. When the module is changed, the fault behaviour specified earlier is transmitted to the replacement module.

Mechanical keying pins

It is possible to insert mechanical keying pins between the I/O module and its screw terminal block to to ensure that the correct connector/module combination is used. These keying pins have codes that are unique to each type of module. When a rack contains identical modules, secondary keying pins can be used for the connector/module combination. The keying pins are supplied with each I/O module.

I/O connectors

Each safety I/O module requires a 40-way screw terminal block **140XTS00100/00200**, to be ordered separately.
These connectors are identical for all discrete *(1)* and analog I/O modules (not compatible with intrinsically safe I/O modules).

Modicon Quantum automation platform
Safety I/O modules

I/O operating principles

The following three I/O modules are certified for creating the safety loop in a Quantum safety PLC solution:

140SAI94000S	8 analog inputs
140SDI95300S	16 x 24 V ⎓ discrete inputs
140SDO95300S	16 x 24 V ⎓ discrete outputs

Each of these modules consists of two microprocessors executing the same program, sharing the same information, and checking one another from time to time.

Safety I/O module diagnostics

The table below shows the diagnostics run on the I/O modules:

Diagnostics	Analog inputs	Discrete outputs	Discrete inputs
Measurement out of range	Yes	–	–
Wiring broken	Yes (4-20 mA implicit) *(1)*	–	–
Process power supply fault	–	Yes	Yes
Overload	–	Yes	–

(1) Detection of 4…20 mA range overshoot only.

***Note**: The short-circuit is not detected on discrete input modules.*
(See the reference manual for Quantum discrete and analog I/O).

In addition, the Quantum safety PLC provides communication diagnostics between the safety CPU and the safety I/O modules, for example a CRC. The PLC therefore tests that:
- The data received is the data that was sent
- The data is updated

To manage disturbances such as EMC effects, which can corrupt data temporarily, it is possible to configure a maximum number of consecutive CRC errors for each module (between 0 and 3).

Diagnostics on power-up

On power-up, the safety I/O modules run an exhaustive self-test which lasts about 30 s. If these tests are negative, the modules deem there to be a malfunction and do not start. The inputs and outputs are set to 0. This self-test phase is indicated by the LEDs flashing quickly on the front of the modules.
In addition, if the external 24 V ⎓ power supply is not connected to the discrete I/O modules, the self-test is also negative, and the module does not start.

Diagnostics on overvoltage and undervoltage conditions

The I/O modules continuously supervise the voltages provided by the various system power supplies (rack power supply and process power supply).

Diagnostics of the safety discrete input module 140SDI95300S

The diagram below illustrates the internal architecture of the Quantum safety discrete input module **140SDI95300S**.

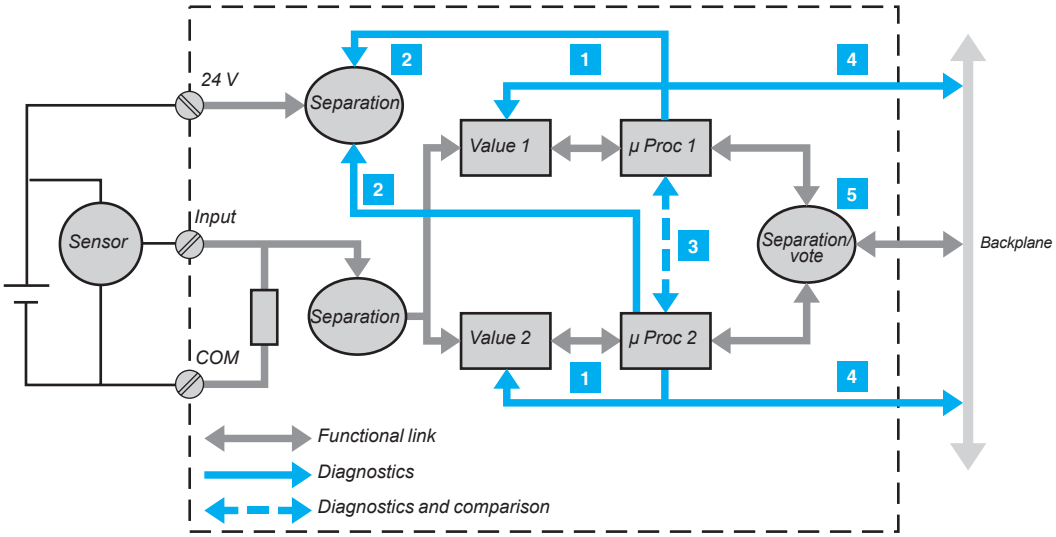

Each input channel uses a unique interface circuit and 2 independent inputs.

Safety function

The safety function of input module **140SDI95300S** is to ensure that the state of the module inputs, when these are usable, is transmitted to the Quantum safety PLC CPU, within a guaranteed period.
The overall mechanism is designed so that whenever this transmission would be impossible, the Quantum CPU would be informed of this and would take the safety measures defined in its application.

Diagnostics of the safety discrete input module 140SDI95300S (continued)

Internal diagnostics

As can be seen on the diagram above, apart from the input terminal block screw, and the connection to the backplane, the module is internally fully redundant.
The input is connected to two different measuring devices, each controlled by a microprocessor.
The + 24 V sensor supply voltage is also supplied to each of the two measurement channels, where its validity is tested. Each microprocessor stores data, then checks that the measuring systems have worked perfectly before sending them to the PLC CPU. Thus, each microprocessor:

1 Imposes levels 0 and 1 on its measuring system, and checks that the values read are indeed consistent with these levels.

2 Checks the presence of the + 24 V voltage, needed to validate the measurement.

3 Spies on the other microprocessor and checks that it has indeed complied with the diagnostic and measurement protocol. Both microprocessors exchange data and compare their measurement results. Then each one defines its response to the CPU by preparing a secure response frame containing the following data:
- Time-based data
- Identification of the module and its address
- CRC on 32 bits for transmission with maximum reliability. The maximum length of the data frame is 160 bits *(1)*. The ratio of these CRC and frame lengths is such that the risk of non-detection of a transmission error on the assembly is virtually zero.

4 The supply voltage from the backplane is also monitored. The module places itself in a safe fallback position in the event of undervoltage or overvoltage of this supply voltage.

For each input, both measurement channels must of course send the same data to the CPU. This is checked by the “vote” function 5 which eliminates any risk of degradation of the data between the microprocessor stage and the connection to the backplane.

Input channel error detection

The digital input monitors the sensor power supply on the process side.
The external wiring is checked by measuring the leakage current.
The minimum current is 1 mA. If it does not reach this value, this is deemed to indicate an external failure due to a break in the circuit.
If a sensor with volt-free contacts is used, a 15 kΩ pull-up resistor is required at the +24 V to avoid detection of the circuit break.

*(1) **140SDI95300S**: 64 bits. **140SDO95300S**: 64 read bits, 32 write bits.*
__140SAI94000S__: 160 bits.

Diagnostics of the safety discrete output module 140SDO95300S

The diagram below illustrates the internal architecture of the Quantum safety discrete output module **140SDO95300S**.

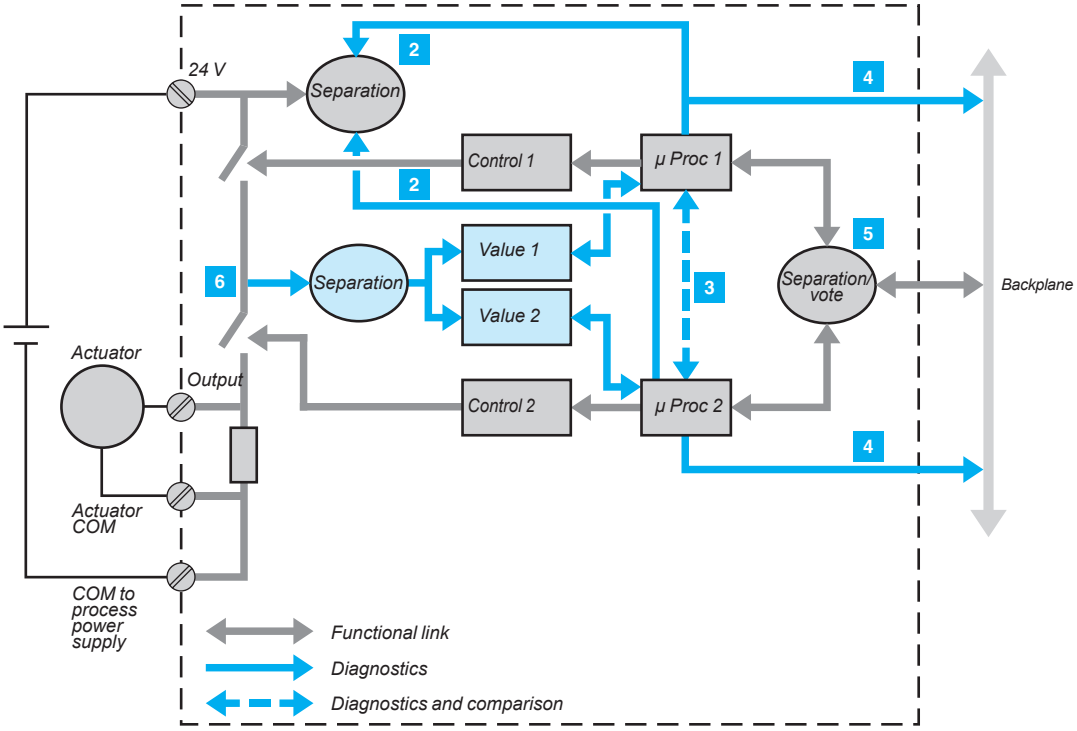

Safety function

Module **140SDO95300S** is a discrete output module and its safety function is to ensure:
That the CPU control is actually applied to the output:
- If communication between the module and the CPU is regular and correct
- If the internal diagnostics confirm that the module is correctly integrated

In contrast, as soon as the internal diagnostics reveal the failure of a part of the system, the module is designed to ensure the channel switches safely to the fallback position, i.e. to apply a “0” command, zero voltage, the only one that can be guaranteed.

Internal diagnostics

Diagnostics 2 to 5 are identical to those of the discrete input module **140SDI95300S** (see page 6/29).

Like all safety modules and CPUs, the **140SDO95300S** module is internally fully redundant. The output is controlled by two different control devices. Each is controlled by a microprocessor.
The output stage is checked. Schematically, each output consists of two switches in series. The mid-point voltage 6 is assessed, and this data item is sent separately to each microprocessor. As there is only one situation where at point 6 the voltage can be floating point, both switches open, the mechanism checks with certainty the possibility of opening both switches, to create the safety function. Thus:
When the current PLC command is “0”, the module checks from time to time whether it is capable of controlling both switches in all possible combinations, except for a command at “1”.
When the current PLC command is “1”, all combinations are tested. The output changes to 0 briefly, for < 1 ms. This has no effect in industrial control where the controlled devices are motors or valves that are insensitive to disturbances in control lasting this long.

The diagram also shows the connection of the external 24 V ⎓ power supply, designed to ensure detection of any failure of the supply.

Timeout states

The discrete output module states in a *timeout* situation can be configured for both the following scenarios:
- Detection of incorrect operation of the Quantum safety PLC CPU
- Communication problem between the Quantum safety PLC CPU and the **140SDO95300S** module

The 3 configurable states are:
- Hold last value
- Set to 0, i.e. safe state
- Set to 1

Diagnostics of the safety analog input module 140SAI94000S

The diagram below illustrates the internal architecture of the Quantum safety analog input module **140SAI94000S**.

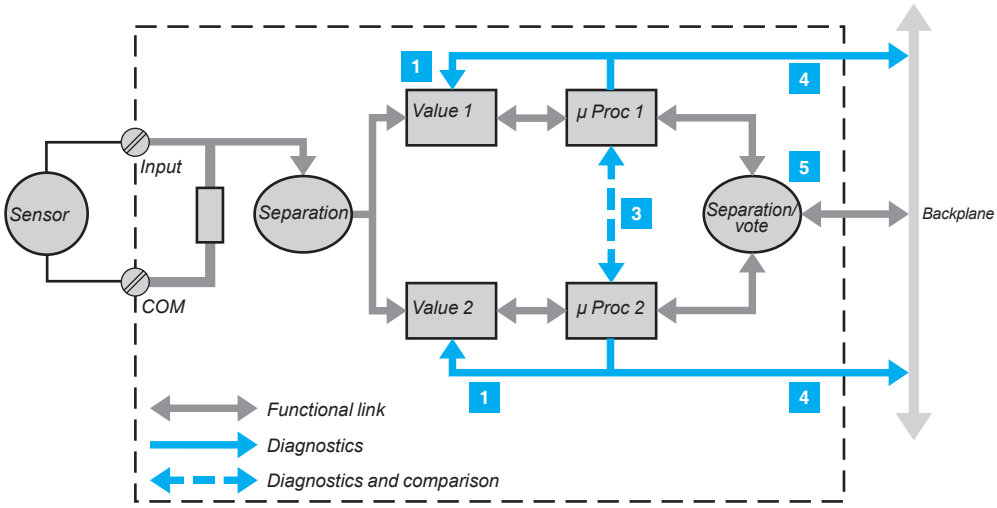

The interface on the process side consists of 8 independent isolated input channels. Each input is acquired by 2 identical circuits. Here it is a current analog input.

At 1 : the measuring devices are regularly monitored for their capacity to measure, without error, 5 analog values between 4 and 20 mA.
The linearity of the measuring stages is checked at the same time.
The other mechanisms, 3 to 5 , for diagnostics of the discrete input module **140SDI95300S** are carried out.

The three input or output modules **140SDI95300S**, **140SDO95300S** and **140SAI94000S**, are also designed with the same electronic and software subassemblies, with the aim of maximizing their reliability.

6

Modicon Quantum automation platform
Safety I/O modules

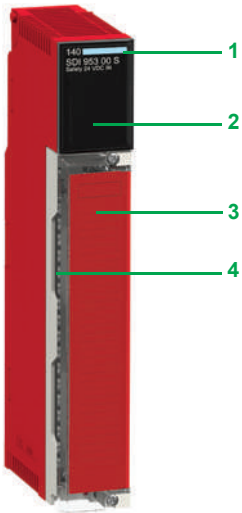

140SDO95300S

Description

140S●● discrete I/O modules have the following on the front panel:
1 Model number and colour code
2 A display block with LEDs
3 A removable hinged door and customizable identification label

To be ordered separately:
4 A 40-way screw terminal block **140XTS00100/140XTS00200**

Display and diagnostics

The LEDs provide a wealth of information about each of the modules.
This information includes both activity on the I/O points and characteristics specific to each module, such as indications of a wiring fault or blown fuse. Visual indication of the quality of the communication with the CPU is given by an “Active” display, which can be used for troubleshooting.

16-point I/O modules

Active		F	
1	9	1	9
2	10	2	10
3	11	3	11
4	12	4	12
5	13	5	13
6	14	6	14
7	15	7	15
8	16	8	16

LED	Colour	Meaning when on
Active	Green	Communication present on bus
F	Red	External fault detected
1…16	Green	The point concerned is activated
1…16	Red	There is a fault on the point indicated

6

Modicon Quantum automation platform

Safety discrete and analog I/O modules

140SDI95300S

140SDO95300S

140SAI94000S

STBXSP3000 + STBXSP3010/3020

References

These three I/O modules are certified by TÜV Rheinland as suitable for use in an SIL3 level safety function. By default they have “Humiseal 1A33” coating which makes them suitable for operation in severe environments (see page 8/2).

Safety discrete input module

Voltage	Number of inputs	Description	Logic	Safety	Reference	Weight kg/ *lb*
24 V ⎓	16	1 group	Positive	Yes	**140SDI95300S**	–

Safety discrete output module

Voltage	Number of outputs	Description	Logic	Safety	Reference	Weight kg/ *lb*
24 V ⎓	16	1 group	Positive	Yes	**140SDO95300S**	–

Safety analog input module

Description	Range	Safety	Reference	Weight kg/ *lb*
8 channels 16 bits	4…20 mA	Yes	**140SAI94000S**	–

Accessories

Description	Sold in lots of	Used for	Safety	Reference	Weight kg/ *lb*
40-way screw terminal block for I/O modules, degree of protection IP 20	–		Non-interfering	**140XTS00100**	0.150/ *0.331*
40-way screw terminal block for I/O modules, degree of protection < IP 20	–		Non-interfering	**140XTS00200**	0.150/ *0.331*
Pack of jumpers for 40-way screw terminal block	12		–	**140XCP60000**	–
Earthing kit	1	Earthing the cable shielding. Kit comprises 1 bar (1 m long) and 2 lateral supports		**STBXSP3000**	–
Terminal blocks for earthing kit	10	Cables, cross-section 1.5...6 mm²		**STBXSP3010**	–
	10	Cables, cross-section 5...11 mm²		**STBXSP3020**	–

Replacement parts

Description	Sold in lots of	Reference	Weight kg/ *lb*
Set of keying pins for 40-way screw terminal blocks	60	**140XCP20000**	–

Modicon Quantum automation platform

Non-interfering modules

Type	Power supply module	
Input voltage	93…138 V ∿ or 170…276 V ∿	20… 30 V ⎓
Output voltage	5.1 V ⎓ (output to bus)	
Main characteristics	■ Type of use: redundant ■ Output current to bus: 11 A at 60°C	■ Type of use: redundant ■ Output current to bus: 8.0 A at 10°C 6.0 A at 60°C
I/O addresses	–	
Bus current required	–	
Maximum load – Current per channel	–	
Maximum load – Current per group	–	
Maximum load – Current per module	–	
Functional safety certification	SIL3 certified	Non-interfering
Approvals	UL 508, CSA 22.2-142, cUL, FM Class 1 Div 2, CE, ATEX Zone 2/22 *(1)*	
Type of module	**140CPS12420**	**140CPS22400**
Pages	1/19 and 1/21	

(1) Only "Conformal Coating" versions, depending on the model, are certified ATEX Zone 2/22. For further information, see pages 8/2 to 8/9.

Type	Discrete input module	Discrete output module	Analog input module	Analog output module
Input voltage	24 V ⎓	–	–	
Output voltage	–	24 V ⎓	–	
Main characteristics	■ Module with 32 discrete inputs in 4 groups of 8 channels ■ Logic: positive *(sink)*	■ Module with 32 discrete inputs in 4 groups of 8 channels ■ Logic: positive *(source)*	■ 16 analog input channels, differential or common point ■ Ranges: 0…25 mA, 0…20 mA, 4…20 mA ■ Resolution: up to 25,000 points ■ Channel-to-channel operating voltage: 30 V ⎓ max.	■ 4 analog output channels ■ Range: 4…20 mA ■ Resolution: 12 bits ■ Isolation between channels: 500 V ∿ at 47…63 Hz or 750 V ⎓ for 1 minute
I/O addresses	2 input words	2 output words	17 input words	4 output words
Bus current required	330 mA	330 mA	360 mA	480 mA
Maximum load – Current per channel	–	0.5 A	–	
Maximum load – Current per group	–	4 A	–	
Maximum load – Current per module	–	16 A	–	
Functional safety certification	Non-interfering	Non-interfering		
Approvals	UL 508, CSA 22.2-142, FM Class 1 Div 2, CE ATEX Zone 2/22 *(1)*	UL 508, CSA 22.2-142, FM Class 1 Div 2, CE ATEX Zone 2/22 *(1)*		
Type of module	**140DDI35300**	**140DDO35300**	**140ACI04000**	**140ACO02000**
Pages	3/2 and 3/14	3/6 and 3/14	3/16 and 3/22	3/18 and 3/22

Modicon Quantum automation platform

Non-interfering modules

Type	RIO head adaptor	RIO drop adaptor
Input voltage	–	24 V ⎓
Output voltage	–	
Main characteristics	■ RIO Quantum head adaptor module, with redundant cable (2 channels) ■ Controls up to 31 RIO drops ■ Data transfer rate: 1.54 Mbps	■ RIO Quantum drop adaptor module, with redundant cable (2 channels) ■ Data transfer rate: 1.54 Mbps
I/O addresses	64 input words/64 output words per drop	64 input words/64 output words per drop
Bus current required	750 mA	750 mA
Maximum load – Current per channel	–	
Maximum load – Current per group	–	
Maximum load – Current per module	–	
Functional safety certification	Non-interfering	
Approvals	UL 508, CSA 22.2-142, FM Class 1 Div 2, CE ATEX Zone 2/22 *(1)*	UL 508, CSA 22.2-142, FM Class 1 Div 2, CE ATEX Zone 2/22 *(1)*
Type of module	**140CRP93200**	**140CRA93200**
Pages	2/31	3/2 and 3/14

(1) Only "Conformal Coating" versions, depending on the model, are certified ATEX Zone 2/22. For further information, see pages 8/2 to 8/9.

Ethernet Modbus TCP network module	Multifunction input module	RIO drop fiber optic repeater	RIO drop fiber optic repeater
24 V ⎓	24…125 V ⎓	5V ⎓	5V ⎓
–			
■ Physical interface: 10 BASE-T/100 BASE-TX (copper cable) and 100 BASE-FX (optical fibre) ■ Access: CSMA-CD ■ Medium: shielded twisted pair cables or optical fibre cables ■ In safety application: Ethernet Peer-to-Peer and Global Data	■ Multifunction input module ■ Discrete inputs processed cyclically ■ Event inputs (4096 time-stamped events/module) ■ Counter inputs (32-bit, 500 Hz) ■ Periodic time stamping ■ Time-delayed switching	■ Multimode optical fibre repeater	■ Single mode optical fibre repeater ■ Coated
64 input words/64 output words per drop	–		
750 mA	330 mA	760 mA	
–			
–			
–			
Non-interfering			
UL 508, CSA 22.2-142, FM Class 1 Div 2, CE ATEX Zone 2/22 *(1)*	UL 508, CSA 22.2-142, Class 1 Div. 2, CE, ATEX Zone 2/22 (1)		
140NOE77111	**140ERT85420**	**140NRP95400**	**140NRP95401C**
5/3 and 5/41	3/6 and 3/14	3/16 and 3/22	3/18 and 3/22

Modicon Quantum automation platform
Non-interfering modules

140CPS12420

140CRP93200

140NOE77111

Non-interfering modules and racks *(1)*

The following Quantum non-interfering modules are fully compatible with the Quantum safety modules.

Power supply module

Input voltage	Output current	Type	Safety	Reference	Weight kg/ *lb*
115/230 V ∼	11 A	Redundant	SIL3 certified	**140CPS12420**	0.650/ *1.433*
24 V ⎓	8A	Redundant	Non-interfering	**140CPS22400**	0.650/ *1.433*

Discrete input module

Description	Voltage	Modularity	Logic	Safety	Reference	Weight kg/ *lb*
4 groups of 8 inputs	**24 V ⎓**	32 inputs	Positive	Non-interfering	**140DDI35300**	0.300/ *0.661*

Discrete output module

Description	Voltage	Modularity	Logic	Safety	Reference	Weight kg/ *lb*
4 groups of 8 outputs	**24 V ⎓**	32 outputs	Positive	Non-interfering	**140DDO35300**	0.450/ *0.992*

Analog input module

Description	Range	Safety	Reference	Weight kg/ *lb*
16 high level channels 0…25,000 points, single-pole	0...20 mA 0...25 mA 4...20 mA	Non-interfering	**140ACI04000**	0.300/ *0.661*

Analog output module

Description	Range	Safety	Reference	Weight kg/ *lb*
4 current channels 12-bit	4...20 mA	Non-interfering	**140ACO02000**	0.300/ *0.661*

Multifunction input module

Description	Function	Safety	Reference	Weight kg/ *lb*
Multifunction input module	32 discrete inputs, supplied between 24 V and 125 V ⎓ Status logging - 500 Hz counting 1 clock signal input	Non-interfering	**140ERT85420**	0.450/ *0.992*

Modules

Description	Type of architecture	Topology	Transparent Ready	Safety	Reference	Weight kg/ *lb*
Quantum RIO head adaptor (1 max.)	Remote I/O (RIO) and mixed I/O	Redundant cable	–	Non-interfering	**140CRP93200**	–
Quantum RIO drop adaptor (31 max.)					**140CRA93200**	
RIO drop optical fibre repeater	Remote I/O (RIO)	Multimode optical fibre (single or redundant)	–	Non-interfering	**140NRP95400**	–
		Single mode optical fibre (single or redundant)	–	Non-interfering	**140NRP95401C**	–
Ethernet TCP/IP network module	Mixed	Bus or ring (copper Class C30 or optical fibre)		Non-interfering	**140NOE77111**	0.345/ *0.761*

Racks

Description	Number of positions	Safety	Reference	Weight kg/ *lb*
Racks for: **- Local I/O modules** **- Remote I/O modules** **- Distributed I/O modules**	6	Non-interfering	**140XBP00600**	0.640/ *1.411*
	10	Non-interfering	**140XBP01000**	1.000/ *2.205*
	16	Non-interfering	**140XBP01600**	1.600/ *3.527*

(1) For non-interfering modules certified by TÜV Rheinland, please consult our website www.schneider-electric.com.

CPUs: page 1/2
I/O architectures: page 2/6
I/O: page 3/2
Communication: page 5/2

Conformal Coating non-interfering modules and racks

Non-interfering Quantum modules and racks are also available in a Conformal Coating version, for operation in severe environments.
These modules and racks with protective coating have an additional letter "**C**" at the end of their references (see pages 8/2 to 8/9).

Accessories

Accessories for power supply module 140CPS12420

Description	Degree of protection	Safety	Reference	Weight kg/ *lb*
7-way screw terminal block	IP 20	–	**140XTS00500**	0.150/ *0.331*

Accessories for mixed discrete I/O module

Description	Sold in lots of	Safety	Reference	Weight kg/ *lb*
40-way screw terminal block for I/O modules, degree of protection IP 20		Non-interfering	**140XTS00100**	0.150/ *0.331*
40-way screw terminal block for I/O modules, degree of protection < IP 20	–	Non-interfering	**140XTS00200**	0.150/ *0.331*
Empty module Without screw terminal block	–	–	**140XCP50000**	–
Empty module with hinged cover Without screw terminal block	–	–	**140XCP51000**	–
Pack of jumpers for 40-way screw terminal block	12	–	**140XCP60000**	–
Set of keying pins for 40-way screw terminal blocks	60	–	**140XCP20000**	–

Rack accessories

Description	Length/ Size	Safety	Reference	Weight kg/ *lb*
19" support for flush mounting a 140XBP01000 rack	125 mm deep	–	**140XCP40100**	–
19" support for surface mounting a 140XBP01000 rack	20 mm deep	–	**140XCP40200**	–

Earthing accessories

Description	Sold in lots of	Used for	Safety	Reference	Weight kg/ *lb*
Earthing kit	1	Earthing the cable shielding. Kit comprises 1 bar (1 m long) and 2 lateral supports	–	**STBXSP3000**	–
Terminal blocks for earthing kit	10	Cables, cross-section 1.5...6 mm²	–	**STBXSP3010**	–
	10	Cables, cross-section 5...11 mm²	–	**STBXSP3020**	–

STBXSP3000 + STBXSP3010/3020

6

Unity Pro

Unity Pro XL Safety

In addition to the functions of Unity Pro Extra Large, Unity Pro XL Safety provides a set of specific verification and protection function blocks to facilitate the creation and debugging of Quantum safety projects.
For a description of these characteristics and their setup, as well as the functional limitations provided for within the framework of SIL 3 certifiable safety projects according to IEC 61508, refer to the document entitled "*Quantum Safety PLC, Safety Reference Manual*" 02/2015, no. 3303879.06 approved by TÜV Rheinland and available on www.schneider-electric.com.

The Unity Pro XLS programming tool is certified compliant with the requirements of IEC 61508 for managing safety applications with Quantum **140CPU65160S** and **140CPU67160S** PLCs.
It offers the complete range of functions required to program a safety project:
- In-depth error diagnostics
- Project protection

During project creation, it is the selection of the Quantum processor that determines whether or not the project created will be a safety project.

Unity Pro XLS is capable of processing all Unity Pro application types:
No other programming tool is needed on the computer.

To program a safety project, Unity Pro XLS provides two IEC 61131-3 programming languages:
- Function Block Diagram (FBD)
- Ladder language (LD)

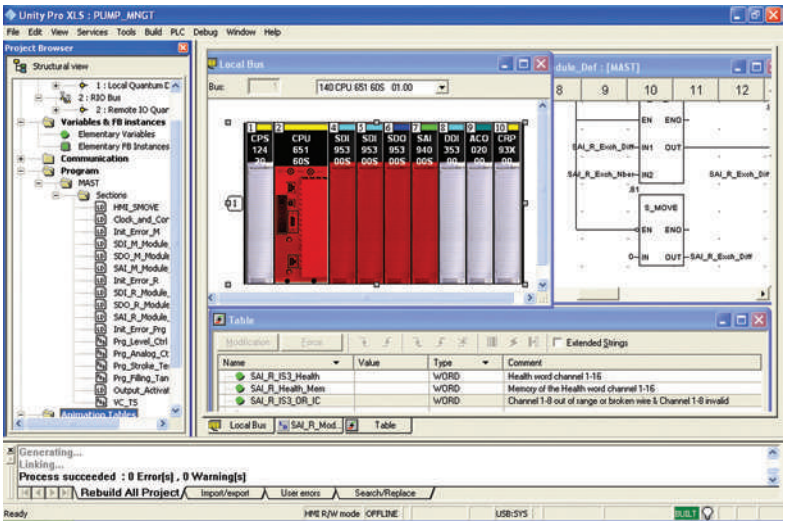

Safety program structure

A safety project must be programmed entirely in a master task (MAST).

It is not possible to:
- Program FAST, TIMER, INTERRUPT or AUX tasks
- Use subroutines (SR sections)

Unity Pro XL Safety (continued)

Language elements

Unity Pro XLS provides a set of specific, certified functions and function blocks. These are available in the “Unity Pro safety function block library”.
Moreover, most of the language elements are available:
■ Elementary data types (EDTs): BOOL, EBOOL, BYTE, WORD, DWORD, INT, UINT, DINT, UDINT and TIME
■ Simple tables, DFBs
■ Direct addressing, for example, writing to %MW memory via a coil in Ladder language (LD)
■ Located variables

Floating point instructions:
With Unity Pro XLS version 7.0 or later, numerical floating point instructions can be used.

Project verification options

Unity Pro XLS provides the following options for the checks performed by the language analyzer:
■ Unused variables
■ Variables written multiple times
■ Unassigned parameters
■ FB instances used multiple times
■ Address overlapping
It is advisable to enable all verification options for a safety project.

Protecting the project

Unity Pro XLS provides protective functions against unauthorized access to safety projects, to the Quantum safety PLC, and to Unity Pro XLS itself.
■ The application password, defined when the safety project was created, is requested:
□ When the safety application file is opened
□ Upon connection to the safety PLC

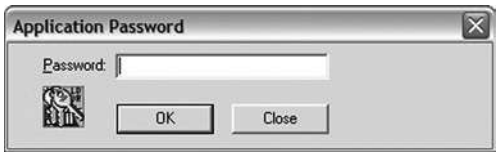

■ The safety editor integrated in Unity Pro XLS is used to define the access rights and the list of authorized functions for each user, in particular:
□ Creation and modification of the application password
□ Activation of maintenance mode
■ Adjustment of the auto-lock period

Functions and function blocks for safety applications

Unity Pro XLS provides a set of elementary functions (EFs) and elementary function blocks (EFBs) certified for use in safety applications:
■ Standard functions certified for safety applications:
□ Mathematical functions and functions for manipulating data from the unrestricted memory area in the safety logic
□ Comparison functions
□ Logic functions, rotations, shift operations
□ Statistical functions
□ Time stamping and sequencing of events
□ Timer and counter setup
□ Type conversions
■ Specific functions for safety architectures:
□ High availability setup: choice of two inputs from a redundant discrete I/O module or a redundant analog input module
□ Hot Standby PLC redundancy setup: to cause the two processors involved in a Hot Standby configuration to change roles from primary to standby and standby to primary respectively. The objective is to verify the capacity of each processor to take over in case the other processor fails. With Unity Pro XLS, this function can very easily be programmed in the application by setting up the S_HSBY_SWAP elementary function from the library.

Unity Pro XL Safety (continued)

Special features and procedures

Software tool self-test

Unity Pro XLS provides the option of performing a self-test to verify that the software components installed have not been corrupted, for example, due to a hard disk failure. This self-test is based on a CRC calculation.

Unity Pro XLS checks the version and CRC of:
- Its DLLs
- The safety FFB library database
- The hardware catalogue database

Unity Pro XLS self-tests are performed on a user request, for example:
- After installing or uninstalling any program on the computer
- Before loading the final application program onto the safety PLC
- Before modifying the application program executed on the safety PLC

Time-stamping binary files

With Unity Pro XLS, every binary file generated for a safety project features a version management field that provides the date and time at which it was generated.
This information is useful for verifying the project.

Downloading a project to Unity Pro XLS

It is possible to download a safety project from the PLC to Unity Pro XLS under the following conditions:
- This must have been defined as an option for the safety project
- The user must know the application password to establish a connection to the safety PLC
- The safety PLC must be placed in maintenance mode to perform the download

Unrestricted memory

The unrestricted memory area contains bits and words that are not protected against write operations from external equipment such as HMI terminals and PLCs, etc.

- It is located at the beginning of the memory.
- Its size can be configured with Unity Pro XLS.
- Values cannot be used directly in the unrestricted memory area and can only be used in conjunction with specific function blocks S_MOVE_BIT and S_MOVE_WORD.

Unity Pro XLS checks in both the application edit and generation phases that only data from the unrestricted memory area is used at the input of the function blocks S_MOVE_BIT and S_MOVE_WORD.
Furthermore, Unity Pro XLS provides a useful list of cross references, allowing easy identification of the way in which variables are used and verification of the application of this rule.

***Note**: For safety applications, it is common practice to verify the correct transfer of data by writing the data twice (to two different variables) and then comparing them.*

Software
Unity Pro software
XL Safety

Unity Pro

Unity Pro XL Safety version 7.0 software

For Modicon M340: All models
For Modicon Premium: **TSX571●...6●1**
For Modicon Quantum: **140CPU31110, 140CPU43412U, 140CPU65150, 140CPU65160, 140CPU65260, 140CPU65860, 140CPU67060, 140CPU67160, 140CPU67260, 140CPU67261, 140CPU67861, 140CPU65160S, 140CPU67160S**
For distributed I/O: **Modicon ETB, TM7, OTB, STB**

Unity Pro XL Safety version 7.0 software packages *(1)*

Description	Licence type	Reference	Weight kg/ *lb*
Unity Pro XL Safety software packages	Single (1 station)	**UNYSPUXFUCD70**	–
	Group (3 stations)	**UNYSPUXFGCD70**	–
	Team (10 stations)	**UNYSPUXFTCD70**	–
	Site (≤ 100 users)	**UNYSPUXFFCD70**	–
Software upgrades from: - Concept S, M, XL - PL7 Micro, Junior, Pro - ProWORX NxT Lite, Full - ProWORX 32 Lite, Full	Single (1 station)	**UNYSPUXZUCD70**	–
	Group (3 stations)	**UNYSPUXZGCD70**	–
	Team (10 stations)	**UNYSPUXZTCD70**	–
	Site (≤ 100 users)	**UNYSPUXZFCD70**	–

Software for Unity Pro, Unity Pro documentation

Please refer to the "Unity and OPC software" catalogue.

Accessories for connecting to the PC programming terminal

Please refer to the "Unity and OPC software" catalogue.

(1) For compatibility of Unity software/automation platforms and distributed I/O, please refer to the "Unity and OPC software" catalogue.

7

Contents

7 - I/O prewired systems and process power supplies

Telefast ABE 7 I/O prewired system

Modicon Telefast ABE 7 prewired system selection guide . . . . . *page 7/2*

- **Presentation** ..... *page 7/8*
- **Cordsets for Modicon Quantum platform** ..... *page 7/8*
- **I/O modules for Modicon Quantum platforms and Telefast ABE 7 sub-bases** ..... *page 7/9*
- **Combinations** ..... *page 7/9*
- **Passive connection sub-bases** ..... *page 7/10*
- **Adaptor sub-bases with soldered relays and plug-in terminal blocks** ..... *page 7/12*
- **Input/output adaptor sub-bases for or with plug-in relays** ..... *page 7/13*
- **Output adaptor sub-bases for plug-in relays** ..... *page 7/14*
- **Plug-in relays** ..... *page 7/15*
- **Connection sub-bases and cabled connectors for Modicon Quantum I/O modules** ..... *page 7/16*

Phaseo DC process power supplies

Regulated switch mode power supplies selection guide . . . . . *page 7/20*

Regulated switch mode power supplies, rectified power supplies selection guide. . . . . . *page 7/22*

- **Regulated switch mode power supplies ABL8MEM, ABL7RM**
  - Description ..... *page 7/24*
  - Selection of protection on the power supply primaries ..... *page 7/25*
  - References ..... *page 7/25*
- **Regulated switch mode power supplies ABL8REM, ABL7RP**
  - Description ..... *page 7/26*
  - Selection of protection on the power supply primaries ..... *page 7/27*
  - References ..... *page 7/27*
- **Regulated switch mode power supplies ASI ABL**
  - Power supplies for AS-Interface cabling system ..... *page 7/28*
  - Selection of protection on the power supply primaries ..... *page 7/29*
  - References ..... *page 7/29*

Connection interfaces

Modicon Telefast ABE7 pre-wired system

Discrete input and/or output sub-bases

Applications	Discrete inputs or outputs				
	Optimum "Economy"	Optimum "Miniature"	Universal		
Compatibility	TSX Micro, Modicon Premium, Modicon M340, Modicon M580	TSX Micro, Modicon Premium, Modicon Quantum, Modicon M340, Modicon M580			
Sub-base type	Passive connection sub-bases				
Equipped with relays	–				
Control voltage	24 V ⎓				
Output voltage	24 V ⎓				
Output current per channel	0.5 A				
Modularity	16		8 -12 -16		
No. of terminals per channel	1	1 to 3	1	2	
Type of connection terminals	Signal	Signal, common (configurable as 24 V ⎓ or 0 V)	Signal	Signal, common (configurable as 24 V ⎓ or 0 V)	
Connectors	20-way HE10 connector				
Terminal block – Removable	No		No		
Terminal block – Terminal type	Screw				
Additional or optional* function	Low-cost version fitted with cable	Miniature sub-bases	Compact size *	Input type 2 * *(1)*	Isolator *
Type of device	**ABE7H••E•00**	**ABE7H16C••**	**ABE7H••R1•** **ABE7H••R50**	**ABE7H••R2•**	**ABE7H••S21**
Page	7/10		7/11		

(1) For Modicon TSX Micro and Modicon Premium PLCs

Applications	Discrete inputs or outputs		Outputs for solid state and/or electromechanical relays
	Optimum "Miniature"		Optimum and Universal
Compatibility	TSX Micro, Modicon Premium, Modicon Quantum, Modicon M340, Modicon M580		
Sub-base type	Passive connection sub-bases		Plug-in electromechanical or solid state relays
Equipped with relays	–		Yes
Control voltage	24 V ⎓		
Output voltage	24 V ⎓		24V ⎓ (solid state) 5... 24 V ⎓, 230 V ∿ (electromechanical)
Output current per channel	0.5 A		5 A (th)
Modularity	16		16 8 passive inputs 8 relay outputs
No. of terminals per channel	1	2	1
Type of connection terminals	Signal, 2 common connections between the inputs and the outputs	Signal, common, 2 common connections between the inputs and the outputs	1 N/O contact and common, 4 output channels 2 input connection points
Connectors	20-way HE10 connectors		
Terminal block – Removable	No		
Terminal block – Terminal type	Screw		
Additional or optional* function	Miniature sub-base Synergy with Tego Power and Micro PLC		Miniature sub-base - Common per group of 4 channels Synergy with Tego Power and Micro PLC
Type of device	**ABE7H16CM11**	**ABE7H16CM21**	**ABE7R16M111**
Page	7/10		7/13

Connection interfaces

Modicon Telefast ABE7 pre-wired system

Discrete input and output sub-bases

Applications	Discrete outputs					
	Optimum	Universal		Optimum		Universal
Compatibility	TSX Micro, Modicon Premium, Modicon Quantum, Modicon M340, Modicon M580					
Relay sub-base	Electromechanical, fixed			Electromechanical or solid state		
Equipped with relays	Yes			Yes	No	No
Control voltage	24 V ⎓					
Output voltage	5 V... 30 V ⎓ 230 V ∿		5 V... 150 V ⎓ 230 V ∿	24 V ⎓ (solid state) 5 V... 24 V ⎓, 230 V ∿ (E.M.)		5 V... 150 V ⎓ 230 V ∿
Output current per channel	2 A (th)	3 A (th)	5 A (th)	2 A (solid state) 6 A (electromechanical)		0.5 to 10 A (dependent on relay)
Modularity	8	8 - 16		16		8 or 16
No. of terminals per channel	2	1	2	1		2 to 3
Type of connection terminals	1 N/O contact and common Volt-free	1 N/O contact	1 N/O contact and common	1 N/O contact		Signal, Polarities
Connectors	20-way HE 10 connector					
Terminal block – Removable	Yes	Yes	Yes	No		No
Terminal block – Terminal type	Screw or spring			Screw		
Additional or optional* function	Miniature sub-base Latching relay	Volt-free or common per group of 8 channels		Miniature sub-bases Common per group of 4 channels		Isolator and fuse
Type of device	**ABE7R08S216●**	**ABE7R●●S1●●**	**ABE7R●●S2●●**	**ABE7R16T111**	**ABE7P16T111**	**ABE7P16T2●●●** **ABE7P08T3●●●**
Page	7/12			7/13	7/14	

(1) For TSX Micro and Modicon Premium PLCs

Applications	Discrete outputs				Discrete inputs or outputs	
	Universal				Universal	
	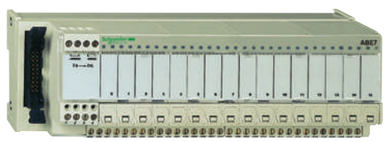					
Compatibility	TSX Micro, Modicon Premium, Modicon Quantum, Modicon M340, Modicon M580					
Relay sub-base	Electromechanical, plug-in		Solid state, fixed	–	–	Solid state, fixed	Solid state, plug-in
Equipped with relays	Yes		Yes	–	–	Yes	No
Control voltage	24 V ⎓					From 24 V ⎓ to 230 V ∿	From 5 V TTL to 230 V ∿
Output voltage	5 V... 150 V ⎓ 230 V ∿		24 V ⎓				
Output current per channel	5 A (th)	8 A (th)	0.5 to 2 A	125 mA	0.5 A	125 mA	12 mA
Modularity	16						
No. of terminals per channel	2 to 3	2 to 6	2		3	2	
Type of connection terminals	1 C/O contact or 1 N/O contact and common	1 C/O contact or 2 C/O contacts and common	Signal and 0 V		24 V ⎓ and 0 V signal	Signal can be isolated, Protected common	Signal	Signal and common
Connectors	20-way HE 10 connector						
Terminal block – Removable	No		Yes	No	No		Yes	No
Terminal block – Terminal type	Screw		Screw or spring		Screw		Screw or spring	
Additional or optional* function	Volt-free or common per group of: 8 channels	4 channels	Fault signal	Isolator and fuse (indicator)	3-wire proximity sensor	Isolator and fuse (indicator)	–
Type of device	**ABE7R16T2●●**	**ABE7R16T3●●**	**ABE7S●●S2B●**	**ABE7H16F43**	**ABE7H16R3●**	**ABE7H16S43**	**ABE7S16E2●●E**	**ABE7P16F31●**
Page	7/13		7/12	7/11			7/12	7/13

Connection interfaces

Modicon Telefast ABE7 pre-wired system

Analog and application-specific sub-bases

Applications	Analog signals and special functions				
Compatibility	TSX Micro: □ TSX3722 □ TSXCTZ●A	Modicon Premium: □ TSXCTY●A □ TSXCAY●1	Modicon Premium: □ TSXASY800 □ TSXAEY1600 □ TSXA●Y800 Modicon X80 I/O: □ BMXAMI0800 □ BMXAMI0810 □ BMXAMO0802 Modicon Quantum: □ 140AVI03000 □ 140ACI03000 □ 140ACI04000 □ 140ACO13000	Modicon Premium: □ TSXASY410 □ TSXAEY420 Modicon X80 I/O: □ BMXAMO0210 □ BMXAMO0410 □ BMEAHO0412 Modicon Quantum □ 140AVO02000 □ 140ACO02000	Modicon X80 I/O: □ BMXAMI0410 □ BMXAMI0410 □ BMXART0414 □ BMXART0814 Modicon Premium: □ TSXAEY1614
Type of signal	Counter inputs and analog I/O	Counter inputs Axis control Position control	Analog inputs Current/Voltage Pt 100	Analog outputs Current Voltage	Analog inputs
Functions	Passive connection, point-to-point with shield continuity				Connection of cold junction compensation or provision, distribution of isolated power supplies
Modularity	1 counter channel or 8 analog inputs + 2 analog outputs		8 channels	4 channels	4 channels
Control voltage	24 V ⎓				–
Output voltage	24 V ⎓				–
Output current per channel	25 mA				–
No. of terminals per channel	2		2 or 4	2 or 4	2 or 4
Connector type	15-way SUB-D + 9-way SUB-D		25-way SUB-D		25-way SUB-D
Terminal block Removable	No		No		No
Terminal block Terminal type	Screw		Screw		Screw
Type of device	**ABE7CPA01**		**ABE7CPA02**	**ABE7CPA21**	**ABE7CPA412** **ABE7CPA410**
Page	7/16				

Analog signals and special functions			
Modicon Premium: □ TSXAEY800 □ TSXAEY1600 Modicon Quantum: □ 140AVI03000 □ 140ACI03000 □ 140ACI04000	Modicon Premium: □ TSXAEY810 Modicon X80 I/O: □ BMXAMI0800 □ BMXAMI0810 □ BMEAHI0812 Modicon Quantum: □ 140AVI03000 □ 140ACI03000 □ 140ACI04000	Modicon Premium: □ TSXAEY1614	Modicon Premium: □ TSXPAY2●2
Analog inputs Current Voltage Pt 100	Isolated analog inputs	Inputs for thermocouples	I/O
Distribution of sensor power supplies by limiter (25 mA)	Distribution of isolated sensor power supplies by converter	Connection of 16 thermocouples with cold junction compensation	Safety module (BG)
8 channels	8 channels	16 channels	12 Emergency stops
24 V ⎓			
24 V ⎓			
25 mA			–
2 or 4		2 or 4	1
25-way SUB-D	25-way SUB-D	25-way SUB-D	50-way SUB-D
No	No	No	No
Screw	Screw or spring	Screw	Screw
ABE7CPA03	**ABE7CPA31●**	**ABE7CPA12**	**ABE7CPA13**
7/16			

Modicon Quantum automation platform

Modicon Telefast ABE 7 pre-wired system

Cordsets for Modicon Quantum platform

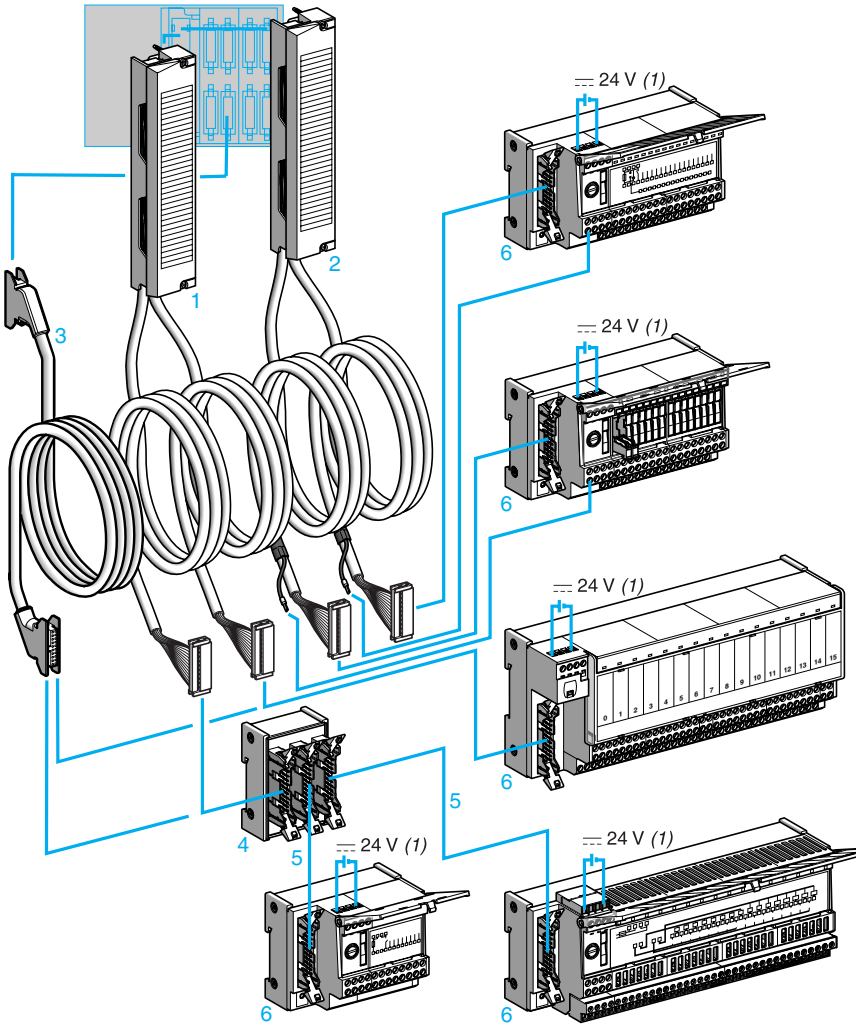

1-2 Cabled connectors combining a standard screw terminal block, two multicore (AWG 22) cables and two 20-way HE 10 connectors. Two types of cabled connector are available:
- ABFM32H●●0 1 cabled connectors for I/O modules (32 channels) on the Modicon Quantum platform, with 2 HE 10 connectors each integrating 16 channels
- ABFM32H●●1 2 cabled connectors for I/O modules (32 channels) on the Modicon Quantum platform, with 2 HE 10 connectors each integrating 16 channels and an external power supply with a direct connection to the terminal marked *(1)* on the sub-bases 6

ABFM0●S20● cabled connectors for analog I/O modules (4, 8 or 16 channels) on the Modicon Quantum platform equipped with a standard screw terminal block and a 25-way SUB-D connector at the other end

3 Cordsets (AWG 22) equipped with a 20-way HE 10 connector **TSXCDP053/●03** for 96-channel I/O modules (connected on six 20-way HE 10 connectors)

4 **ABE7ACC02** splitter box (16 to 2 x 8 channels) for use with 8-channel sub-bases

5 A single type of cable equipped with 20-way HE 10 connectors, irrespective of the 8 or 16-channel modularity. The HE 10 connectors can be moulded **TSXCDP●●●** or insulation piercing **ABFH20H●●●**.

6 8 and 16-channel connection sub-bases from the Modicon ABE 7 range

(1) The 24 V ⎓ power supply of Quantum I/O modules must only be connected via Telefast ABE 7 sub-bases. The 0 V ⎓ connections must be equipotential.

Modicon Quantum automation platform

Modicon Telefast ABE 7 pre-wired system

I/O modules for Modicon Quantum platforms and Telefast ABE 7 sub-bases

Quantum I/O modules		24 V ⎓ discrete I/O					Analog I/O				
		Inputs	Outputs		Inputs	Outputs	Inputs		Outputs		
		32 I	32 O		96 I	96 O	8 I	16 I	4 O		8 O
	140	DDI 35300 DDI 85300	DDO35300		DDI 36400	DDO 36400	AVI 03000 ACI 03000	ACI 04000	AVO 02000	ACO 02000	ACO 13000
Cabled connectors	ABF	M32H●●0		M32H●●1	–		M08 S201	M16 S201	M04 S200	M04 S201	M08 S202
Cordsets	TSX	–			CDP053/●03		–				
Passive sub-bases											
8 channels	ABE7H08R●●	(1)			(1)						
	ABE7H08S21				(1)						
16 channels	ABE7H16R●●/H16C●●										
	ABE7H16S21										
	ABE7H16R23	(2)									
	ABE7H16F43										
	ABE7H16S43	(3)									
Input adaptor sub-bases											
16 channels	ABE7S16E2B1●/7P16F31●●										
	ABE7P08T330		(1)								
Output adaptor sub-bases											
8 channels	ABE7S08S2●●					(1)					
	ABE7R08S●●●/7P08T330		(1)			(1)					
16 channels	ABE7R16S●●●										
	ABE7R16T●●●/7P16T●●●										
	ABE7S16S●●●										
Sub-bases for analog I/O											
4 channels	ABE7CPA21										
8 channels	ABE7CPA02							(4)			
	ABE7CPA03							(4)			
	ABE7CPA31							(4)			

ABFM●● cabled connectors
TSXCDP●●● cordsets

***Note**: For for harsh environments, **Telefast ABE 9** IP67 passive splitter boxes can be used in combination with I/O modules on the Modicon Quantum platform. Main characteristics:*
- 8/16 I/O channels
- Connection of 1 to 16 sensors/actuators
- M12 I/O connectors
- Connection to the PLC by connector or by multicore cable
- IP67 degree of protection
- Plastic case
Please consult our website www.schneider-electric.com.

*(1) With the **ABE7ACC02** splitter sub-base (16 channels as 2 x 8).*
*(2) With **140DDI35300** module only.*
*(3) With **140DDI85300** module only.*
*(4) 2 **ABE7CPA●●** sub-bases are required.*

Connection interfaces

Modicon Telefast ABE7 pre-wired system

Passive connection sub-bases

ABE7H20E●●●

Passive connection sub-bases for discrete signals

Optimum "Economy" sub-bases

Function	No. of channels	No. of terminals per channel	No. of terminals on row number	For PLCs	Length of PLC connection cable	Type of connection	Reference	Weight kg / lb
Input or output	16	1	2	Modicon TSX Micro Modicon Premium	1 m *3.281 ft.*	Screw	**ABE7H20E100**	0.330 *0.728*
					2 m *6.562 ft.*	Screw	**ABE7H20E200**	0.410 *0.904*
					3 m *9.843 ft.*	Screw	**ABE7H20E300**	0.480 *1.058*
				Siemens S7	1,5 m *4.921 ft.*	Screw	**ABE7H32E150**	0.360 *0.794*
					3 m *9.843 ft.*	Screw	**ABE7H32E300**	0.460 *1.014*

ABE7H16C21

ABE7H16CM21

Optimum "Miniature" sub-bases

Function	No. of channels	No. of terminals per channel	No. of terminals on row number	LED per channel	Polarity distribution	Type of connection	Reference	Weight kg / lb
Input or output	16	1	1	No	No	Screw	**ABE7H16C10**	0.160 *0.353*
				Yes	No	Screw	**ABE7H16C11**	0.160 *0.353*
		2	2	Yes	0 or 24 V	Screw	**ABE7H16C21**	0.205 *0.452*
		3	3	Yes	0 or 24 V	Screw	**ABE7H16C31**	0.260 *0.573*
Input and output *(1)*	16	1	1	Yes	No	Screw	**ABE7H16CM11**	0.160 *0.353*
		2	2	Yes	0 or 24 V	Screw	**ABE7H16CM21**	0.200 *0.441*

(1) 8 I + 8 Q: these products have 2 common connections which enable inputs and outputs to be connected to the same sub-base at the same time.

Connection interfaces

Modicon Telefast ABE7 pre-wired system

Passive connection sub-bases

ABE7H●●R1●

Passive connection sub-bases for discrete signals (continued)

Universal sub-bases

Function	No. of channels	No. of terminals per channel	No. of terminals on row number	LED per channel	Polarity distribution	Isolator (I) Fuse (F) per channel	Type of connection	Reference	Weight kg *lb*
Input or output	8	1	1	No	No	–	Screw	**ABE7H08R10**	0.187 *0.412*
				Yes	No	–	Screw	**ABE7H08R11**	0.187 *0.412*
		2	2	Yes	0 or 24 V	–	Screw	**ABE7H08R21**	0.218 *0.481*
						I	Screw	**ABE7H08S21**	0.245 *0.540*
	12	1	1	No	No	–	Screw	**ABE7H12R10**	0.274 *0 604*
				Yes	No	–	Screw	**ABE7H12R11**	0.274 *0.604*
			2	No	No	–	Screw	**ABE7H12R50**	0.196 *0.432*
		2	2	No	0 or 24 V	–	Screw	**ABE7H12R20**	0.300 *0.661*
				Yes	0 or 24 V	–	Screw	**ABE7H12R21**	0.300 *0.661*
						I	Screw	**ABE7H12S21**	0.375 *0.827*
	16	1	1	No	No	–	Screw	**ABE7H16R10**	0.274 *0.604*
				Yes	No	–	Screw	**ABE7H16R11**	0.274 *0.604*
			2	No	No	–	Screw	**ABE7H16R50**	0.196 *0.432*
		2	2	No	0 or 24 V	–	Screw	**ABE7H16R20**	0.300 *0.661*
				Yes	0 or 24 V	–	Screw	**ABE7H16R21**	0.300 *0.661*
						I	Screw	**ABE7H16S21**	0.375 *0.827*
		3	3	No	0 or 24 V	–	Screw	**ABE7H16R30**	0.346 *0.763*
				Yes	0 or 24 V	–	Screw	**ABE7H16R31**	0.346 *0.763*
Input type 2 *(1)*	16	2	2	Yes	0 or 24 V	–	Screw	**ABE7H16R23**	0.320 *0.705*
Input	16	2	1	Yes	24 V	I, F *(2)*	Screw	**ABE7H16S43**	0.640 *1.411*
Output	16	2	1	Yes	0 V	I, F *(2)*	Screw	**ABE7H16F43**	0.640 *1.411*

(1) For TSX Micro, Modicon Premium.
(2) With LED to indicate blown fuse.

Connection interfaces

Modicon Telefast ABE7 pre-wired system

Adaptor sub-bases with fixed relays and removable terminal blocks

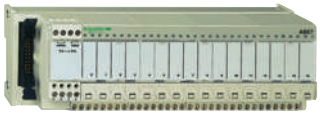

ABE7H16E2●●

Adaptor sub-bases with fixed solid state relays, removable terminal blocks

Universal input sub-bases with solid state relays

Number of channels	No. of terminals per channel	Isolation of PLC/ Operative part	Voltage	Type of connection	Reference	Weight kg *lb*
16	2	Yes	⎓ 24 V	Screw	**ABE7S16E2B1**	0.370 *0.816*
				Spring	**ABE7S16E2B1E**	0.370 *0.816*
			⎓ 48 V	Screw	**ABE7S16E2E1**	0.370 *0.816*
			∿ 48 V	Screw	**ABE7S16E2E0**	0.386 *0.851*
			∿ 110 V	Screw	**ABE7S16E2F0**	0.397 *0.875*
			∿ 230 V	Screw	**ABE7S16E2M0**	0.407 *0.897*
				Spring	**ABE7S16E2M0E**	0.407 *0.897*

Universal output sub-bases with solid state relays

Number of channels	Isolation of PLC/ Operative part	Output voltage	Output current	Fault detection signal *(1)*	Type of connection	Reference	Weight kg *lb*
16	No	24 V ⎓	0.5 A	Yes *(2)*	Screw	**ABE7S16S2B0**	0.405 *0.893*
					Spring	**ABE7S16S2B0E**	0.405 *0.893*
				No	Screw	**ABE7S16S1B2**	0.400 *0.882*
					Spring	**ABE7S16S1B2E**	0.400 *0.882*

ABE7R08S216

Optimum and Universal output sub-bases with electromechanical relays

Number of channels	Number of contacts	Output current	Polarity distribution/ operative part	Type of connection	Reference	Weight kg *lb*
8	1 N/O	2 A	Contact common per group of 4 channels	Screw	**ABE7R08S111**	0.252 *0.556*
	Latching	2 A	Volt-free	Screw	**ABE7R08S216**	0.448 *0.988*
	1 N/O	5 A	Volt-free	Screw	**ABE7R08S210**	0.448 *0.988*
16	1 N/O	2 A	Contact common per group of 8 channels	Screw	**ABE7R16S111**	0.405 *0.893*
				Spring	**ABE7R16S111E**	0.405 *0.893*
	1 N/O	5 A	Volt-free	Screw	**ABE7R16S210**	0.405 *0.893*
				Spring	**ABE7R16S210E**	0.405 *0.893*
			Common per group of 8 channels on both poles	Screw	**ABE7R16S212**	0.400 *0.882*

(1) A fault on a sub-base output Qn will set PLC output Qn to safety mode, which will be detected by the PLC.
(2) Can only be used with modules with protected outputs.

Connection interfaces

Modicon Telefast ABE7 pre-wired system

Input/output adaptor sub-bases for or with plug-in relays

ABE7R16M111

ABE7R16T210

Adaptor sub-bases with plug-in relays

Universal input sub-bases for solid state relays, supplied without relays

Number of channels	No. of terminals per channel	For relay type	Isolation of PLC/ Operative part	Input connection	Type of connection	Reference	Weight kg *lb*
16	2	ABS7E ABR7 ABS7S33E	Yes	Volt-free	Screw	**ABE7P16F310**	0.850 *1.874*
				Polarity distribution	Screw	**ABE7P16F312**	0.850 *1.874*

Optimum and Universal output sub-bases, supplied with electromechanical relays *(1)*

Number of channels	Relay width	Relay type supplied	Number and type of contacts	Polarity distribution/operative part	Reference	Weight kg *lb*
16	5 mm *0,197 in.*	ABR7S11	1 N/O	Contact common per group of 4 channels	**ABE7R16T111**	0.600 *1.323*
				Contact common per group of 4 output channels + 2 common input terminals	**ABE7R16M111** *(2)*	0.600 *1.323*
	10 mm *0,394 in.*	ABR7S21	1 N/O	Volt-free	**ABE7R16T210**	0.735 *1.620*
				Common on both poles *(3)*	**ABE7R16T212**	0.730 *1.609*
		ABR7S23	1 C/O	Volt-free	**ABE7R16T230**	0.775 *1.709*
				Contact common *(3)*	**ABE7R16T231**	0.730 *1.609*
	12 mm *0,472 in.*	ABR7S33	1 C/O	Volt-free	**ABE7R16T330**	1.300 *2.866*
				Common on both poles *(4)*	**ABE7R16T332**	1.200 *2.646*
		ABR7S37	2 C/O	Volt-free	**ABE7R16T370**	1.300 *2.866*

(1) The sub-bases are supplied as standard with electromechanical relays, all or part of which can be replaced by solid state relays of the same width (it is possible to combine these different technologies on a single sub-base).
(2) Two connection methods are available, enabling inputs and outputs to be connected to the same sub-base at the same time.
(3) Per group of 8 channels.
(4) Per group of 4 channels.

Connection interfaces

Modicon Telefast ABE7 pre-wired system

Output adaptor sub-bases for plug-in relays

ABE7P16T2●●

Output adaptor sub-bases for plug-in relays

Optimum and Universal output sub-bases for solid state relays and/or electromechanical relays *(1)*

No. of channels	Relay width	For relay type	Isolator per channel	Fuse per channel	Polarity distribution/ operative part	Type of connection	Reference	Weight kg *lb*
16	5 mm *0.197 in.*	ABR7S11 ABS7SC1B	No	No	Contact common per group of 4 channels	Screw	**ABE7P16T111**	0.550 *1.213*
	10 mm 0.*394 in.*	ABR7S2● ABS7SA2● ABS7SC2● ABE7ACC20	No	No	Volt-free	Screw	**ABE7P16T210** *(2)*	0.615 *1.356*
							ABE7P16T230 *(2)*	0.655 *1.444*
				Yes	Volt-free	Screw	**ABE7P16T214**	0.675 *1.488*
				No	Common on both poles *(3)*	Screw	**ABE7P16T212**	0.615 *1.356*
				Yes	Common on both poles *(3)*	Screw	**ABE7P16T215**	0.670 *1.477*
8	12 mm *0.472 in.*	ABR7S33 ABS7A3● ABS7SC3●● ABE7ACC21	No	No	Volt-free	Screw	**ABE7P08T330**	0.450 *0.992*
16	12 mm *0.472 in.*	ABR7S33 ABS7A3● ABS7SC3●● ABE7ACC21	No	No	Volt-free	Screw	**ABE7P16T330**	0.900 *1.984*
					Common on both poles *(4)*	Screw	**ABE7P16T332**	0.900 *1.984*
		ABR7S33 ABS7SA3M ABS7SC3E ABE7ACC21	No	Yes	Volt-free	Screw	**ABE7P16T334**	0.900 *1.984*
			Yes	Yes	Common on both poles *(4)*	Screw	**ABE7P16T318**	1.000 *2.205*

(1) Not equipped with relays.
(2) With relay ABR7S21 for sub-base ABE7P16T210, with relay ABR7S23 for sub-base ABE7P16T230●.
(3) Per group of 8 channels.
(4) Per group of 4 channels.

Connection interfaces

Modicon Telefast ABE7 pre-wired system

Plug-in relays

571152

ABS7SC1B

Plug-in solid state relays

Relay width	Functions	Input circuit		Output circuit		Unit reference	Weight kg *lb*
		Current	Nominal voltage	Current	Nominal voltage	Order in lots of 4	
5 mm *.,197 in.*	Output	⎓	24 V	2 A	24 V ⎓	**ABS7SC1B**	0.010 *0.022*
10 mm *0.394 in.*	Output	⎓	24 V	0.5 A	5…48 V ⎓	**ABS7SC2E**	0.016 *0.035*
					24…240 V ∿	**ABS7SA2M**	0.016 *0.035*
12 mm *0.472 in.*	Input	⎓	5 V TTL	–	24 V ⎓	**ABS7EC3AL**	0.014 *0.031*
			24 V Type 2	–	24 V ⎓	**ABS7EC3B2**	0.014 *0.031*
			48 V Type 2	–	24 V ⎓	**ABS7EC3E2**	0.014 *0.031*
		50 Hz ∿	48 V	–	24 V ⎓	**ABS7EA3E5**	0.014 *0.031*
		60 Hz ∿	110…130 V	–	24 V ⎓	**ABS7EA3F5**	0.014 *0.031*
		50 Hz ∿	230…240 V	–	24 V ⎓	**ABS7EA3M5**	0.014 *0.031*
	Output	⎓	24 V	2 A Self-protected	24 V ⎓	**ABS7SC3BA**	0.016 *0.035*
				1.5 A	5…48 V ⎓	**ABS7SC3E**	0.016 *0.035*
				1.5 A	24…240 V ∿	**ABS7SA3M**	0.016 *0.035*

816476

ABR7S2●

816474

ABR7S3●

Plug-in electromechanical relays

Relay width	Control voltage	Output current *(1)*	Number of contacts	Order in lots of	Unit reference	Weight kg *lb*
5 mm *0.197 in.*	24 V ⎓	5 A (Ith)	1 N/O	4	**ABR7S11**	0.005 *0.011*
10 mm *0.394 in.*	24 V ⎓	5 A (Ith)	1 N/O	4	**ABR7S21**	0.008 *0.018*
			1 C/O	4	**ABR7S23**	0.008 *0.018*
12 mm *0.472 in.*	2 V ⎓	10 A (Ith)	1 C/O	4	**ABR7S33**	0.017 *0.037*
		8 A (Ith)	2 C/O	4	**ABR7S37**	0.017 *0.037*
	48 V ⎓	8 A (Ith)	1 C/O	4	**ABR7S33E**	0.017 *0.037*

Accessory

Description	Reference	Weight kg *lb*
Extractor for 5 mm *(0.197 in.)* miniature relay	**ABE7ACC12**	0.010 *0.022*

Connection interfaces

Modicon Telefast ABE7 pre-wired system

Connection sub-bases for analog channels and application-specific channels

ABE7CPA01

ABE7CPA21
ABE7CPA410
ABE7CPA412

Connection sub-bases for counter and analog channels

Functions	For platforms	Compatible modules	Type of connection on Telefast end	Type of connection	Reference	Weight kg *lb*
Analog and counter	TSX Micro	Analog and integrated counter TSX3722 TSXCTZ●A	15-way SUB-D	Screw	**ABE7CPA01**	0.300 *0.661*
Counter, axis control, position control	Modicon Premium	TSXCTY●A TSXCAY●1	15-way SUB-D	Screw	**ABE7CPA01**	0.300 *0.661*
Distribution of 4 thermocouples	Modicon X80 I/O	BMXART0414 BMXART0814	25-way SUB-D	Screw	**ABE7CPA412**	0.180 *0.397*
Distribution of 16 thermocouples	Modicon Premium	TSXAEY1614	25-way SUB-D	Screw	**ABE7CPA12**	0.300 *0.661*
Passive distribution of 8 analog EIS channels on screw terminals, with shield continuity	Modicon Premium	TSXASY800 TSXAEY1600 TSXA●Y800	25-way SUB-D	Screw	**ABE7CPA02**	0.290 *0.639*
	Modicon X80 I/O	BMXAMI0800 BMXAMI0810 BMEAHI0812 BMXAMO0802				
	Modicon Quantum	140AVI03000 140ACI03000 140ACI04000 140ACO13000				
Provision and distribution of protected isolated power supplies for 4 analog input channels	Modicon M340	BMXAMI0410	25-way SUB-D	Screw	**ABE7CPA410**	0.180 *0.397*
Distribution of 4 analog output channels	Modicon Premium	TSXASY410 TSXAEY420	25-way SUB-D	Screw	**ABE7CPA21**	0.210 *0.463*
	Modicon X80 I/O	BMXAMO0210 BMXAMO0410 BMEAHO0412				
	Modicon Quantum	140AVO02000 140ACO02000				
Distribution and supply of 8 analog input channels with limitation of each current loop	Modicon Premium	TSXAEY800 TSXAEY1600	25-way SUB-D	Screw	**ABE7CPA03**	0.330 *0.728*
	Modicon Quantum	140AVI03000 140ACI03000 140ACI04000				
Distribution and supply of 8 analog input channels isolated from one another with 25 mA/ channel limitation	Modicon Premium	TSXAEY810	25-way SUB-D	Screw	**ABE7CPA31**	0.410 *0.904*
	Modicon X80 I/O	BMXAMI0800 BMXAMI0810 BMEAHI0812 *(1)*		Spring	**ABE7CPA31E**	0.410 *0.904*
	Modicon Quantum	140AVI03000 140ACI03000 140ACI04000				
Safety	Modicon Premium	TSXPAY2●2	25-way SUB-D	Screw	**ABE7CPA13**	0.290 *0.639*

(1) The BMEAHI0812 module is not compatible with the ABE7CPA31E connection sub-base.

Connection interfaces

Modicon Telefast ABE7 pre-wired system

Cabled connectors for Modicon Quantum I/O modules

816500

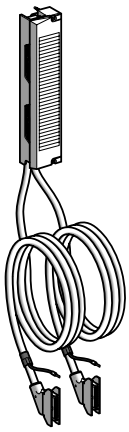

ABFM32H●●1

570464

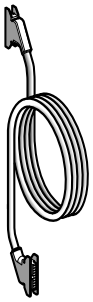

TSXCDP●03

Cabled connectors for Modicon Quantum I/O modules

Type of signal	I/O modules	Type of connector	Gauge	Cross-section	Length	No. of channels	Reference	Weight
			AWG	mm²	m *ft*			kg *lb*
Inputs and relay outputs	Consult our website www.schneider-electric.com	2 x 20-way HE10	22	0.324	1.5 *4.921*	2 x 16	**ABFM32H150**	0.650 *1.433*
					3 *9.843*	2 x 16	**ABFM32H300**	1.150 *2.535*
0.5 A outputs	Consult our website www.schneider-electric.com	2 x 20-way HE10 + external power supply	22	0.324	1.5 *4.921*	2 x 16	**ABFM32H151**	0.650 *1.433*
					3 *9.843*	2 x 16	**ABFM32H301**	1.150 *2.535*
Inputs or outputs (96 channels)	140DDI36400 140DDO36400	2 x 20-way HE10	22	0.324	0.5 *1.640*	6 x 16	**TSXCDP053**	0.085 *0.187*
					1 *3.281*	6 x 16	**TSXCDP103**	0.150 *0.331*
					2 *6.562*	6 x 16	**TSXCDP203**	0.280 *0.617*
					3 *9.843*	6 x 16	**TSXCDP303**	0.410 *0.904*
					5 *16.404*	6 x 16	**TSXCDP503**	0.670 *1.477*
Analog inputs	140AVI03000 140ACI03000	1 x 25-way SUB-D	24	0.22	2 *6.562*	8	**ABFM08S201**	0.600 *1.323*
	140ACI04000	2 x 25-way SUB-D	24	0.22	2 *6.562*	16	**ABFM16S201**	0.620 *1.367*
Analog outputs	140AVO02000	1 x 25-way SUB-D	24	0.22	2 *6.562*	4	**ABFM04S200**	0.450 *0.992*
	140ACO02000	1 x 25-way SUB-D	24	0.22	2 *6.562*	4	**ABFM04S201**	0.450 *0.992*
	140ACO13000	1 x 25-way SUB-D	24	0.22	2 *6.562*	8	*(1)*	0.450 *0.992*

(1) For further information, please consult our Customer Care Center.

Connection interfaces

Modicon Telefast ABE7 pre-wired system

Accessories for connection sub-bases

816483

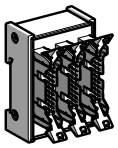

ABE7ACC02

816480

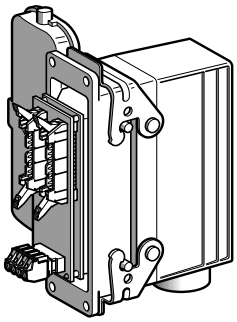

ABE7ACC80 + ABE7ACC81

816481

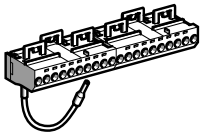

ABE7BV20

580700

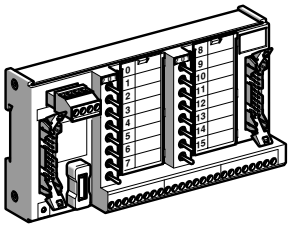

ABE7TES160

Accessories

Description	No. of channels	Characteristics	Order in multiples of	Unit reference	Weight kg *lb*
Splitter sub-base	–	16 as 2 x 8 channels	1	**ABE7ACC02**	0.075 *0.165*
Redundant output sub-base	–	16 as 2 x 16 channels	1	**ABE7ACC10**	0.075 *0.165*
Redundant input sub-base	–	16 as 2 x 16 channels	1	**ABE7ACC11**	0.075 *0.165*
Plug-in continuity blocks	–	Width 12 mm (0.472 in.)	4	**ABE7ACC21**	0.010 *0.022*
Additional snap-on terminal blocks (shunted terminals)	8	10 screw terminals	5	**ABE7BV10**	0.030 *0.066*
	16	20 screw terminals	5	**ABE7BV20**	0.060 *0.132*
I/O simulator sub-base	16	For display, forcing, inhibition, continuity	1	**ABE7TES160**	0.350 *0.772*
Self-adhesive marker tag holder	–	For 6 characters	50	**AR1SB3**	0.001 *0.002*
Quick-blow fuses 5 x 20, 250 V, UL	–	0.125 A	10	**ABE7FU012**	0.010 *0.022*
		0.5 A	10	**ABE7FU050**	0.010 *0.022*
		1 A	10	**ABE7FU100**	0.010 *0.022*
		2 A	10	**ABE7FU200**	0.010 *0.022*
		4 A	10	**ABE7FU400**	0.010 *0.022*
		6.3 A	10	**ABE7FU630**	0.010 *0.022*

Connection interfaces

Modicon Telefast ABE7 pre-wired system

Accessories for connection sub-bases

816479

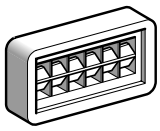

AR1SB3

816484

ABEC08R●●●

Commoning link accessories

Description	For common	Colour	Distance between cable ends	Reference	Weight kg *lb*
Commoning links Modularity 8 x 1 mm²	Coil	White	12 cm *4.724 in.*	**ABFC08R12W**	0.020 *0.044*
			2 cm *0.787 in.*	**ABFC08R02W**	0.010 *0.022*
	~	Red	12 cm *4.724 in.*	**ABFC08R12R**	0.020 *0.044*
			2 cm *0.787 in.*	**ABFC08R02R**	0.010 *0.022*
	⎓	Blue	12 cm *4.724 in.*	**ABFC08R12B**	0.020 *0.044*
			2 cm *0.787 in.*	**ABFC08R02B**	0.010 *0.022*

Power supplies and transformers Phaseo

Regulated switch mode power supplies

Power supplies Function modules		Regulated switch mode			
		ABL8MEM, ABL7RM: 7 to 60 W - Mounting on rail ABL8REM, ABL7RP: 60 to 144 W - Mounting on rail			
Input voltage		100...240 V ∼ 120...250 V ⎓			
Connection to world-wide line supplies	United States - 120 V (in phase-to-neutral) - 240 V (in phase-to-phase)	Single-phase (N-L1) or 2-phase (L1-L2) connection			
	Europe - 230 V (in phase-to-neutral) - 400 V (in phase-to-phase)	Single-phase (N-L1) connection			
	United States - 277 V (in phase-to-neutral) - 480 V (in phase-to-phase)	–			
IEC/EN 61000-3-2 conformity		Yes for ABL7RP, not for ABL8REM and not applicable for ABL8MEM and ABL7RM			
Protection against undervoltage		Yes			
Protection against overloads and short-circuits		Yes, voltage detection. Automatic restart on elimination of the fault			
Diagnostic relay		–			
Compatibility	**with function modules**	–			
	with power supplies	–			
Power reserve (Boost)		1.25 to 1.4 In for 1 minute, depending on model (with ABL8MEM)			No
Output voltage		5 V ⎓	12 V ⎓	24 V ⎓	48 V ⎓
Output current	0.3 A			**ABL8MEM24003**	
	0.6 A			**ABL8MEM24006**	
	1.2 A			**ABL8MEM24012**	
	2 A		**ABL8MEM12020**		
	2.5 A			**ABL7RM24025**	**ABL7RP4803**
	3 A			**ABL8REM24030**	
	4 A	**ABL8MEM05040**			
	5 A		**ABL7RP1205**	**ABL8REM24050**	
	6 A				
	10 A				
	20 A				
	40 A				
Pages		7/24	7/24 *(7 to 60 W)* 7/26 *(60 to 144 W)*		7/26

Power supplies Function modules		Function modules *(Only compatible with Phaseo ABL8RP/ABL8WP power supplies)*				
		ABL8RPS/8RPM/8WPS: 72 to 960 W - Wide input voltage range Mounting on rail		ABL8DCC: converter modules ⎓ 24 V/⎓ 5-12 V	ABL8B: solutions to microbreaks and power outages	ABL8RED24400 : redundancy solution	ABL8PRP24100: solution for discriminating protection of the application
Input voltage		100...120 V ∼ and 200...500 V ∼ *(1)*	380...500 V ∼	24 V ⎓	24 V ⎓	24 V ⎓	24 V ⎓
Connection to world-wide line supplies	United States - 120 V (in phase-to-neutral) - 240 V (in phase-to-phase)	Single-phase (N-L1) or 2-phase (L1-L2) connection	–	–	–	–	–
	Europe - 230 V (in phase-to-neutral) - 400 V (in phase-to-phase)		3-phase (L1-L2-L3) connection	–	–	–	–
	United States - 277 V (in phase-to-neutral) - 480 V (in phase-to-phase)		3-phase (L1-L2-L3) connection	–	–	–	–
IEC/EN 61000-3-2 conformity		Yes		–	–	–	–
Protection against undervoltage		Yes		–	–	–	–
Protection against overloads and short-circuits		Yes, current limitation or undervoltage detection		Yes, current limitation	–	–	–
Diagnostic relay		Yes, depending on model			Yes	Yes	–
Compatibility	**with function modules**	Yes with buffer module, battery and battery control modules, redundancy module and discriminating downstream protection module			–	–	–
	with power supplies	–		ABL8RP/8WP	ABL8RP/8WP	ABL8RP/8WP	ABL8RP/8WP
Power reserve (Boost)		1.5 In for 4 seconds		No	–	–	–
Output voltage		24 V ⎓		5 V ⎓	7...12 V ⎓	24 V ⎓	24 V ⎓	24 V ⎓
Output current	0.3 A							
	0.6 A							
	1.2 A							
	2 A				**ABL8DCC12020**			
	2.5 A							
	3 A	**ABL8RPS24030**						
	4 A							
	5 A	**ABL8RPS24050**						
	6 A			**ABL8DCC05060**				
	10 A	**ABL8RPS24100**						**ABL8PRP24100**
	20 A	**ABL8RPM24200**	**ABL8WPS24200**			**ABL8BBU24200**	**ABL8RED24400**	
	40 A		**ABL8WPS24400**			**ABL8BUF24400** **ABL8BBU24400**	**2x ABL8RED24400**	
Pages		–		–		–	–	–

(1) Except **ABL8RPM24200**. 100...120 V ∼ and 200...240 V ∼.

Power supplies and transformers Phaseo

Regulated switch mode power supplies
Rectified power supplies

Power supplies	Regulated switch mode ABL1REM/1RPM: 60 to 240 W - Mounting on panel				Rectified and filtered ABL8FEQ/8TEQ: 12 to 1440 W - Mounting on panel or rail - For severe application		Regulated switch mode ASI ABL: Power supplies for AS-Interface cabling system	
Input voltage	100...240 V ∿ 120...370 V ⎓				230 V ∿ and 400 V ∿	400 V ∿	100...240 V ∿	
Connection to world-wide line supplies - United States - 120 V (in phase-to-neutral) - 240 V (in phase-to-phase)	Single-phase (N-L1) or 2-phase (L1-L2) connection				–		Single-phase (N-L1) connection	
- Europe - 230 V (in phase-to-neutral) - 400 V (in phase-to-phase)	Single-phase (N-L1) –				Single-phase (N-L1) or 2-phase (L1-L2) connection	3-phase (L1-L2-L3) connection	Single-phase (N-L1) connection	
- United States - 277 V (in phase-to-neutral) - 480 V (in phase-to-phase)	Single-phase (N-L1) –				–		–	
IEC/EN 61000-3-2 conformity	Yes for ABL1RP, not applicable for ABL1REM24025/12050				Yes		No	Yes
Protection against undervoltage	–				No		–	Yes
Protection against overloads and short-circuits	Yes, voltage detection. Automatic restart on on elimination of overload or short circuit				Yes depending on model, by fuse	Yes, by external protection	Yes	
Diagnostic relay	–				No		–	
Compatibility with function modules	–				No		–	
Power reserve (Boost)	No				No		No	
Output voltage	12 V ⎓		24 V ⎓		24 V ⎓		30 V ⎓	24 V ⎓
Output current 0.5 A					**ABL8FEQ24005**			
1 A					**ABL8FEQ24010**			
2 A					**ABL8FEQ24020**			
2.5 A			**ABL1REM24025**				**ASIABLB3002** **ASIABLD3002** *(1)* **ASIABLM3024** *(2)*	
3 A								**ASIABLM3024** *(2)*
4 A					**ABL8FEQ24040**			
4.2 A			**ABL1R•M24042**					
4.8 A							**ASIABLB3004** **ASIABLD3004** *(1)*	
5 A	**ABL1REM12050**							
6 A					**ABL8FEQ24060**			
6.2 A			**ABL1R•M24062**					
8.3 A	**ABL1RPM12083**							
10 A			**ABL1R•M24100**		**ABL8FEQ24100**	**ABL8TEQ24100**		
15 A					**ABL8FEQ24150**			
20 A					**ABL8FEQ24200**	**ABL8TEQ24200**		
30 A						**ABL8TEQ24300**		
40 A						**ABL8TEQ24400**		
60 A						**ABL8TEQ24600**		
Pages	–				–		7/28	

(1) With earth fault detection.
(2) One output 30 V ⎓ and one output 24 V ⎓ ± 5 %.

7

More technical information on www.schneider-electric.com

More technical information on www.schneider-electric.com

Phaseo power supplies and transformers

Regulated switch mode power supplies ABL8MEM, ABL7RM

7 to 60 W - Rail mounting

ABL8MEM●●●●● *Zelio Logic*

Regulated switch mode power supplies ABL8MEM, ABL7RM

The ABL8MEM, ABL7RM power supply offer is designed to provide the DC voltage necessary for the control circuits of automation system equipment consuming 7 to 60 W in 5, 12 and 24 V ⎓.
Comprising six products, this range meets the needs encountered in industrial, commercial and residential applications. These compact electronic switch mode power supplies provide a quality of output current that is suitable for the loads supplied and compatible with the **Zelio Logic** range and the small **Modicon M340**, **Premium** and **Quantum** configurations.
Clear guidelines are given on selecting the upstream protection devices which are often used with them, and thus a comprehensive solution is provided that can be used.
ABL8MEM/7RM power supplies can be connected in phase-to-neutral (N-L1) or in phase-to-phase *(1)* (L1-L2). They deliver a voltage that is precise to 3%, whatever the load and whatever the type of line supply, within a range of 85 to 264 V ∿.
Conforming to IEC standards and UL, CSA and TUV certified, they are suitable for universal use. The inclusion of overload and short-circuit protection makes downstream protection unnecessary if discrimination is not required.
Due to their low power, ABL8MEM/7RM power supplies consume very little harmonic current and thus are not subject to the requirements of standard IEC/EN 61000-3-2 concerning harmonic pollution.
ABL8MEM/7RM power supplies have protection devices to ensure optimum performance of the automation system with an automatic reset mode .
The products are equipped with an output voltage adjustment potentiometer to compensate for any line voltage drops in installations with long cable runs.
These power supplies also have a cable run inside the case so that the outputs can be connected at the top or bottom of the product as required.
These power supplies are designed for direct mounting on 35 mm ⊥ rails, or on a mounting plate using their retractable fixing lugs.

There are six references available in the Phaseo ABL8MEM/7RM range:

■ **ABL8MEM24003**	7 W	0.3 A	24 V ⎓
■ **ABL8MEM24006**	15 W	0.6 A	24 V ⎓
■ **ABL8MEM24012**	30 W	1.2 A	24 V ⎓
■ **ABL7RM24025**	60 W	2.5 A	24 V ⎓
■ **ABL8MEM05040**	20 W	4 A	5 V ⎓
■ **ABL8MEM12020**	25 W	2 A	12 V ⎓

(1) 240 V ∿ nominal.

Description

ABL8MEM●●●●

ABL7RM24025

1 2.5 mm² screw terminal for connection of the incoming AC voltage
2 Output voltage adjustment potentiometer
3 2.5 mm² screw terminal for connection of the output voltage
4 LED indicating presence of the DC output voltage
5 Duct for throughwiring of the output voltage conductors at the bottom (except for model ABL7RM24025)
6 Clip-on marker tag (except for model ABL7RM24025)
7 Retractable fixing lugs for panel mounting

Phaseo power supplies and transformers

Regulated switch mode power supplies ABL8MEM, ABL7RM

7 to 60 W - Rail mounting

Selection of protection on the power supply primaries

Type of line supply	100 to 240 V ∿ single-phase		
Type of protection	Thermal-magnetic circuit breaker		gG fuse
	GB2 (IEC) *(1)*	C60N (IEC) C60N (UL/CSA)	
ABL8MEM05040	GB2●●07 *(2)*	24581 24517	2 A
ABL8MEM12020			
ABL8MEM24003			
ABL8MEM24006			
ABL8MEM24012			
ABL7RM24025	GB2●●08 *(2)*	24582 24518	3 A

(1) UL pending
(2) Complete the reference by replacing ●● with:
CB: *for single-pole circuit-breaker with magnetic trip threshold 12 to 16 In*
CD: *for single-pole + neutral circuit-breaker with magnetic trip threshold 12 to 16 In*
DB: *for 2-pole circuit-breaker with magnetic trip threshold 12 to 16 In*
CS: *for single-pole circuit-breaker with magnetic trip threshold 5 to 7 In*

References

ABL8MEM05040/12020/24012

ABL8MEM24003/24006

ABL7RM24025

Input voltage	Secondary			Reset	Conformity to standard IEC/EN 61000-3-2 *(1)*	Reference	Weight kg/*lb*
	Output voltage	Nominal power	Nominal current				
Single-phase (N-L1) **or 2-phase** (L1-L2) **connection**							
100…240 V -15%, + 10% 50/60 Hz	5 V ⎓	20 W	4 A	Automatic	Not applicable	**ABL8MEM05040**	0.195/ *0.430*
	12 V ⎓	25 W	2 A	Automatic	Not applicable	**ABL8MEM12020**	0.195/ *0.430*
	24 V ⎓	7 W	0.3 A	Automatic	Not applicable	**ABL8MEM24003**	0.100/ *0.220*
		15 W	0.6 A	Automatic	Not applicable	**ABL8MEM24006**	0.100/ *0.220*
		30 W	1.2 A	Automatic	Not applicable	**ABL8MEM24012**	0.195/ *0.430*
		60 W	2.5 A	Automatic	Not applicable	**ABL7RM24025**	0.255/ *0.562*

Description	Use	Order in multiples of	Unit reference	Weight kg/*lb*
Clip-on marker tags	Replacement parts for ABL8MEM power supplies	100	**LAD90**	0.030/ *0.066*

(1) Due to their power < 75 W, **ABL8MEM/7RM** *power supplies are not subject to the requirements of standard IEC/EN 61000-3-2.*

Phaseo power supplies and transformers

Regulated switch mode power supplies ABL8REM, ABL7RP

60 to 144 W - Rail mounting

ABL8REM24030 *Twido*

Switch mode power supplies: range ABL8REM/7RP

The ABL8REM/7RP power supply offer is designed to provide the DC voltage necessary for the control circuits of automation system equipment consuming 60 to 144 W in 12, 24 and 48 V ⎓. Comprising four products, this range meets the needs encountered in industrial, commercial, and residential applications. With phase-to-neutral (N-L1) or phase-to-phase *(1)* (L1-L2) connection, these slim electronic switch mode power supplies provide a quality of output current that is suitable for the loads supplied and compatible with both the **Twido** range and small **Modicon M340**, **Premium** and **Quantum** configurations, making them ideal partners.
Their simplified characteristics in comparison with the **ABL8RP/8WP** offer also make them the low-cost solution for applications less affected by constraints with the line supply, such as harmonic pollution and outages. Clear guidelines are given on selecting the upstream protection devices which are often used with them, and thus a comprehensive solution is provided that can be used in total safety.

The ABL8REM/7RP power supplies delivers a voltage that is precise to 3%, whatever the load and whatever the type of line supply, within a range of 85 to 264 V ∼. Conforming to IEC standards and UL, CSA and TUV certified, they are suitable for universal use. The inclusion of overload and short-circuit protection makes downstream protection unnecessary if discrimination is not required.

ABL8REM power supplies do not have an anti-harmonic filter and do not satisfy the requirements of standard IEC/EN 61000-3-2 concerning harmonic pollution. **ABL7RP** power supplies, however, are equipped with a PFC *(Power Factor Correction)* filter, thus ensuring compliance with standard IEC/EN 61000-3-2.

ABL8REM/7RP power supplies have protection devices to give optimum performance of the automation system with an automatic reset mode.
In the event of an overload or short-circuit, the integrated protection interrupts the current supply before the output voltage drops below 19 V ⎓. The protection device resets itself automatically (no action or change a fuse).

Each product is equipped with an output voltage adjustment potentiometer to compensate for any line voltage drops in installations with long cable runs.
The power supplies are designed for direct mounting on 35 and 75 ⊥⊥ rails.

There are four references available in the ABL8REM/7RP Phaseo range:

■ **ABL8REM24030**	72 W	3 A	24 V ⎓
■ **ABL8REM24050**	120 W	5 A	24 V ⎓
■ **ABL7RP1205**	60 W	5 A	12 V ⎓
■ **ABL7RP4803**	144 W	3 A	48 V ⎓

Description

1 2.5 mm² enclosed screw terminals for connection of the input voltage (single-phase N-L1, phase-to-phase L1-L2 *(1)*)
2 Protective glass flap
3 Input voltage status LED (orange)
4 Output DC voltage status LED (green)
5 Locking catch for the glass flap (sealable)
6 Clip-on marker tag
7 Output voltage adjustment potentiometer
8 2.5 mm² enclosed screw terminal block for connection of the DC output voltage

(1) 240 V ∼ nominal

Phaseo power supplies and transformers

Regulated switch mode power supplies ABL8REM, ABL7RP

60 to 144 W - Rail mounting

Selection of protection on the power supply primaries

Type of line supply	100 V ∼			240 V ∼		
Type of protection	Thermal-magnetic circuit breaker		gG fuse	Thermal-magnetic circuit breaker		gG fuse
	GB2 (IEC) *(1)*	C60N (IEC) C60N (UL)		GB2 (IEC) *(1)*	C60N (IEC) C60N (UL)	
ABL7RP1205	GB2●●06 *(2)*	24580 24516	2 A	GB2●●06 *(2)*	24580 24516	2 A *(3)*
ABL8REM24030	GB2●●07 *(2)*	24581 24517	2 A	GB2●●06 *(2)*	24580 24516	2 A *(3)*
ABL8REM24050	GB2●●08 *(2)*	24582 24518	4 A	GB2●●07 *(2)*	24581 24517	2 A
ABL7RP4803	GB2●●08 *(2)*	24582 24518	4 A	GB2●●07 *(2)*	24581 24517	2 A

(1) UL pending
(2) Complete the reference by replacing ●● with:
CB: for single-pole circuit-breaker with magnetic trip threshold 12 to 16 In
CD: for single-pole + neutral circuit-breaker with magnetic trip threshold 12 to 16 In
DB: for 2-pole circuit-breaker with magnetic trip threshold 12 to 16 In
CS: for single-pole circuit-breaker with magnetic trip threshold 5 to 7 In
(3) 1 A version not available.

ABL8REM/7RP range of Phaseo regulated switch mode power supplies

ABL7RP1205/4803

ABL8REM24030

ABL8REM24050

Input voltage	Secondary			Reset	Conformity to standard IEC/EN 61000-3-2	Reference	Weight kg/*lb*
	Output voltage	Nominal power	Nominal current				
Single-phase (N-L1) or phase-to-phase (L1-L2) connection							
100...240 V ∼ - 15%, + 10% 50/60 Hz	12 V ⎓	60 W	5 A	Automatic or manual	Yes	**ABL7RP1205**	1.000/ *2.205*
	24 V ⎓	72 W	3 A	Automatic	No	**ABL8REM24030**	0.520/ *1.146*
		120 W	5 A	Automatic	No	**ABL8REM24050**	1.000/ *2.205*
	48 V ⎓	144 W	2.5 A	Automatic or manual	Yes	**ABL7RP4803**	1.000/ *2.205*

Power supplies and transformers Phaseo

Regulated switch mode power supplies ASIABL

Power supplies for AS-Interface cabling system

Power supplies for AS-Interface cabling system

Consistent with the standard Phaseo line, the range of **ASIABL** power supplies is designed to deliver a ⎓ voltage, as required by AS-Interface cabling systems. Three versions are available to meet all needs encountered in industrial applications, in enclosures, cells or floor-standing enclosures. These single-phase, electronic, switch mode power supplies guarantee the quality of the output current, in accordance with the electrical characteristics and conforming to standard EN 50295.

ASIABLB3002

ASIABLB300●

Operating on a 100 to 240 V ∿ supply, this power supply delivers a voltage of 30 V ⎓. Available in 2.4 and 4.8 A ratings, the outgoing terminal block allows the cable to be connected separately to the
AS-Interface interface modules and to the AS-Interface master. Input and output LEDs allow fast and continuous diagnostics.

ASIABLD3004

ASIABLD300●

Operating on a 100 to 240 V ∿ supply, this power supply delivers a voltage of 30 V ⎓. Available in 2.4 and 4.8 A ratings, it allows diagnosis and management of earth faults on AS-Interface interface modules. In the event of an earth fault, the Phaseo power supply stops dialogue on the AS-Interface cabling system and puts the installation in a fallback condition. Restarting is only possible after deliberate acknowledgement of the fault. Two inputs/outputs enable dialogue with a processing unit. The outgoing terminal block is used to connect the AS-Interface cable separately to the interface modules and master modules. Input, output and earth fault LED's allow fast and continuous diagnostics.

ASIABLM3024

ASIABLM3024

Operating on a 100 to 240 V ∿ supply, this product provides two separate power supplies, which are totally independent in the way they operate.
Two output voltages - 30 V/2.4 A (AS-Interface line supply) and 24 V/3 A - are available, so making it possible to supply the control equipment without an additional power supply. Input and output LEDs allow fast and continuous diagnostics.

Power supplies and transformers Phaseo

Regulated switch mode power supplies ASIABL

Power supplies for AS-Interface cabling system

Selection of protection on the power supply primaries

Type of mains supply	∼ 115 V single-phase			∼ 230 V single-phase		
Power supply	**Thermal-magnetic circuit-breaker** *(1)*		**Gg fuse**	**Thermal-magnetic circuit-breaker** (2-pole)		**Gg fuse**
ASIABLB3002	GB2●B07	MG24517 *(2)*	2 A	GB2DB06	MG24516 *(2)*	2 A
ASIABLB3004	GB2●B08	MG24518 *(2)*	4 A	GB2DB07	MG17453 *(2)*	2 A
ASIABLD3002	GB2●B07	MG24517 *(2)*	2 A	GB2DB06	MG24516 *(2)*	2 A
ASIABLD3004	GB2●B08	MG24518 *(2)*	4 A	GB2DB07	MG17453 *(2)*	2 A
ASIABLM3024	GB2●B07	MG24517 *(2)*	2 A	GB2DB06	MG17453 *(2)*	2 A

(1) Single-phase protection, replace ● by C*; 2-pole protection, replace ● by* D.
(2) UL certified circuit breaker.

References

ASIABL●3002

Input voltage	Secondary			Auto-protect reset	Earth fault detection	Reference	Weight
	Output voltage	Nominal power	Nominal current				kg/*lb*
Single phase (N-L1) **or 2-phase** (L1-L2)							
∼ **100…240 V** - 15 %, + 10 % 50/60 Hz	⎓ 30 V	72 W	2,4 A	Auto	No	**ASIABLB3002**	0.800/ *1.764*
		144 W	4,8 A	Auto	No	**ASIABLB3004**	1.300/ *2.866*
		72 W	2,4 A	Auto	Yes	**ASIABLD3002**	0.800/ *1.764*
		144 W	4,8 A	Auto	Yes	**ASIABLD3004**	1.300/ *2.866*
	⎓ 30 V	72 W	2,4 A	Auto	No	**ASIABLM3024**	1.300/ *2.866*
	⎓ 24 V	72 W	3 A				

8

Contents

8 - Appendices and services

Treatment for severe environments, “Conformal Coating” modules

- Presentation ..... page 8/2
- Standard Unity CPUs ..... page 8/3
- Racks and extensions for racks ..... page 8/4
- Power supply modules ..... page 8/4
- PCMCIA memory extension cards ..... page 8/4
- Remote I/O (RIO) modules ..... page 8/5
- Distributed I/O (DIO) modules ..... page 8/5
- Discrete input modules ..... page 8/6
- Discrete output modules ..... page 8/6
- Discrete mixed I/O modules ..... page 8/7
- Analog input modules ..... page 8/7
- Analog output modules ..... page 8/7
- Mixed analog I/O modules ..... page 8/7
- High-speed counter modules ..... page 8/8
- High-speed input with interrupt module ..... page 8/8
- Unity Hot Standby system ..... page 8/8
- Profibus DP network gateway ..... page 8/9
- AS-Interface cabling system ..... page 8/9
- Modbus Plus communication devices ..... page 8/9
- Asynchronous serial link module ..... page 8/9

Technical appendices

- Standards and certifications ..... page 8/10
- Environmental tests ..... page 8/11
- Special protective treatment ..... page 8/13
- Ethernet network Infrastructure ..... page 8/14
- Certifications for automation products, EC regulations ..... page 8/20

A dedicated services offer for your installed base

- Operation services ..... page 8/22
- Modernisation services ..... page 8/23
- Customization services ..... page 8/23

Index

- Product reference index ..... page 8/24

Modicon Quantum automation platform

Treatment for severe environments

“Conformal Coating” modules

Presentation

Protective treatment of Modicon Quantum PLCs

Modicon Quantum PLCs comply with “**TC**” (Treatment for all Climates) treatment requirements.

For installations in industrial production workshops or environments corresponding to “**TH**” (Treatment for hot and humid environments), PLCs must be housed in enclosures providing at least IP 54 protection as specified by standard IEC/ EN 60529 or an equivalent level of protection according to NEMA 250.

These PLCs themselves have an IP 20 protection index *(1)*.
They can therefore be installed without an enclosure in reserved access areas that do not exceed **pollution level 2** (control room with no dust-producing machinery or activity). **Pollution level 2** does not take account of more severe environments such as those where the air is polluted with dust, fumes, corrosive or radioactive particles, vapours or salts, moulds, insects, etc.

Treatment for more severe environments

If the Modicon Quantum automation platform has to be used in a severe environment, the “*Conformal Coating*” offer provides CPU and power supply modules, I/O modules and racks with “***Humiseal 1A33***” coating on their electronic cards.

This treatment improves the cards' insulation qualities and their resistance to:
- Condensation
- Dusty atmospheres (conducting foreign particles)
- Chemical corrosion, in particular during use in sulphurous atmospheres (oil refinery, purification plant, etc.) or atmospheres containing halogens (chlorine, etc.)

This protection, combined with appropriate installation and maintenance, enables Modicon Quantum products to be used in harsh chemical environments such as types **3C2** and **3C3** described in standard IEC/EN 60721-3-3 or types **G3** and **GX** described in standard ISA-S71.04.

The functional and electrical characteristics of the coated modules are identical to those of the non-coated versions. Consult the selection guides or the references pages in this catalogue (chapter 1…chapter 5).

To order modules and racks with Conformal Coating protection, please refer to references pages 8/3 to 8/9 (for coated products, add the letter “**C**” at the end of the standard reference).

ATEX IECEx certification consists of a detailed procedure for the testing and inspection of equipment made to be used in potentially hazardous areas. The results obtained after this procedure enable an ATEX certificate to be issued, together with a report confirming and demonstrating that the product can be used safely in potentially explosive environments (in line with the given parameters).

For Modicon Quantum, some “Coated” modules which can be used in a Unity system are now certified ATEX IEC-EX with the following standards:
- IEC/EN 60079-0
- IEC/EN 60079-15
- IEC/EN 60079-31

ATEX level “II 3 GD” certified products will have the following information on their identification plates:

II: for surface industries only

3: Category 3 equipment, for use in areas in which explosive environments caused by gases, vapours, mists or air/dust mixtures are unlikely to occur, or if they do occur, are likely to do so only infrequently and for a short period only (less than 10 hours a year). This equipment can be used in zones 2/22.

G-D: for gas and dust.

The PLC configuration must be placed in a location providing at least IP54 protection (insulated enclosure) for 3G and Gc materials and IP6X for category 3D and Dc equipment when used in zones 2/22.

Items located in a hazardous zone 2/22 or outside ATEX zones can be connected to the PLC configuration intrinsically with no safety barrier. Certified modules can also be connected in hazardous zones 1/21 or 0/20 using intrinsic, external safety barriers.

1) Any slot in **TSXRKY●●** *racks that is not occupied by a module must be fitted with a* **TSXRKA02** *screw-on protective cover (sold in lots of 5).*

Modicon Quantum automation platform

Treatment for severe environments

“Conformal Coating” CPUs

140CPU43412UC

140CPU65●●0C

Standard “Conformal Coating” Unity CPUs

CPU		Application memory (max.)		Communication ports	Safety	Certified ATEX Zone 2/22	Reference	Weight
Clock speed	Coprocessor	Available internal RAM (with located variables)	Program with PCMCIA card					
MHz		KB	KB					kg/*lb*
66	Built-in math	548	–	2 Modbus RS 232 1 Modbus Plus	–	Yes	**140CPU31110C**	–
	Built-in math	1056	–	2 Modbus RS 232 1 Modbus Plus	–	Yes	**140CPU43412UC**	–
166	Yes, built-in Ethernet TCP/IP	768	7168	1 Modbus *(1)* 1 Modbus Plus 1 USB 1 Ethernet TCP/IP	–	Yes	**140CPU65150C**	–
266	Yes, built-in Ethernet TCP/IP	1024	7168	1 Modbus *(1)* 1 Modbus Plus 1 USB 1 Ethernet TCP/IP	–	Yes	**140CPU65160C**	–
		1024	7168	1 Modbus *(1)* 1 Modbus Plus 1 USB 1 Ethernet TCP/IP	Yes	Yes	**140CPU65160S**	–
		3072	7168	1 Modbus *(1)* 1 Modbus Plus 1 USB 1 Ethernet TCP/IP	–	Yes	**140CPU65260C**	–
		11264	–	1 Modbus *(1)* 1 Modbus Plus 1 USB 1 Ethernet TCP/IP	–	Yes	**140CPU65860C**	–
		512	–	1 Modbus *(1)* 1 Modbus Plus 1 USB 1 Hot Standby port (100 Mbps) *(2)*	–	Yes	**140CPU67060C**	–
		1024	7168	1 Modbus *(1)* 1 Modbus Plus 1 USB 1 Hot Standby port (100 Mbps) *(2)*	–	Yes	**140CPU67160C**	–
		1024	7168	1 Modbus *(1)* 1 Modbus Plus 1 USB 1 Hot Standby port (100 Mbps) *(2)*	Yes	Yes	**140CPU67160S**	–
		3072	7168	1 Modbus *(1)* 1 Modbus Plus 1 USB 1 Hot Standby port (100 Mbps) *(2)*	–	Yes	**140CPU67260C**	–
		3072	7168	1 Modbus *(1)* 1 Modbus Plus 1 USB 1 Hot Standby port (100 Mbps) *(3)*	–	Yes	**140CPU67261C**	–
		11264	–	1 Modbus *(1)* 1 Modbus Plus 1 USB 1 Hot Standby port (100 Mbps) *(3)*	–	Yes	**140CPU67861C**	–

Migrating Quantum CPUs

As both the **140CPU43412AC** and **140CPU53414BC** Quantum CPUs are compatible with Concept or ProWORX software, they can be upgraded to be compatible with the Unity Pro software without any hardware modification. This process of migrating from Concept to Unity Pro is achieved by updating the CPU operating system. This update is performed with the aid of the OS-Loader tool included with Unity Pro.

The upgraded **140CPU43412AC** CPU is then equivalent to the corresponding Unity CPU **140CPU43412UC.**

Note: *Migration of the* **140CPU53414BC** *CPU requires version ⩾ 3.0 of the Unity Pro software.*

Standard “Conformal Coating” Concept/ProWORX CPUs

Memory (total)	Coprocessors	Safety	Certified ATEX Zone 2/22	Reference	Weight kg/*lb*
256 KB	No	–	–	**140CPU11302C**	0.300/ *0.661*
512 KB	No	–	–	**140CPU11303C**	0.300/ *0.661*
2 MB	Integrated	–	–	**140CPU43412AC**	0.850/ *1.874*
4 MB	Integrated	–	Yes	**140CPU53414BC**	0.850/ *1.874*

(1) RS 232/485 Modbus port. For connection cables and accessories: see page 1/13.
(2) Ethernet 10/100 Mbps port for multimode optical fibre. For connection cables and accessories: see page 2/41.
(3) Ethernet 10/100 Mbps port for single mode optical fibre. For connection cables and accessories: see page 2/41.

Modicon Quantum automation platform

Treatment for severe environments
"Conformal Coating"
racks, power supplies, memory cards

"Conformal Coating" racks

Description	Number of slots	Safety	Certified ATEX Zone 2/22	Reference	Weight kg/*lb*
Racks for: **- Local I/O Modules**	3	–	–	**140XBP00300C**	0.340/ *0.750*
	4	–	Yes	**140XBP00400C**	0.450/ *0.992*
- Remote I/O Modules	6	Non-interfering	Yes	**140XBP00600C**	0.640/ *1.411*
- Distributed I/O Modules	10	Non-interfering	Yes	**140XBP01000C**	1.000/ *2.205*
	16	Non-interfering	Yes	**140XBP01600C**	1.600/ *3.527*

"Conformal Coating" rack expansion module *(1)*

Description	Length/ dimensions	Certified ATEX Zone 2/22	Reference	Weight kg/*lb*
Rack expansion module	–	–	**140XBE10000C**	–

.

"Conformal Coating" power supply modules *(2)*

Input voltage	Output current	Type	Safety	Certified ATEX Zone 2/22	Reference	Weight kg/*lb*
120/230 V ∿	3 A	Standalone	–	–	**140CPS11100C**	0.650/ *1.433*
115/230 V ∿	11 A	Summable	–	–	**140CPS11420C**	0.650/ *1.433*
115/230 V ∿	11 A	Redundant	Non-interfering	Yes	**140CPS12420C**	0.650/ *1.433*
24 V ⎓	3 A	Standalone	–	–	**140CPS21100C**	0.650/ *1.433*
	8 A	Summable	–	Yes	**140CPS21400C**	0.650/ *1.433*
		Redundant	Non-interfering	Yes	**140CPS22400C**	0.650/ *1.433*
48…60 V ⎓	8 A	Summable	–	–	**140CPS41400C**	0.650/ *1.433*
		Redundant	–	–	**140CPS42400C**	0.650/ *1.433*
125 V ⎓	3 A	Standalone	–	–	**140CPS51100C**	0.650/ *1.433*
	8 A	Redundant	–	–	**140CPS52400C**	0.650/ *1.433*

"Conformal Coating" PCMCIA memory expansion cards *(3)*

140CPU65150C, 140CPU65160C, 140CPU65260C, 140CPU67060C, 140CPU67160C, 140CPU67260C and **140CPU67261C** Quantum CPUs can take the following memory expansion cards.
There are two types of memory limit:
- One associated with the type of CPU
- One associated with the chosen model of PCMCIA memory card

The lower of these two limits defines the memory capacity that is accessible to the user for the application.

Description	Memory size		Certified ATEX Zone 2/22	Reference	Weight kg/*lb*
	Application	Data file			
Application/ configurable data file SRAM memory expansion	192…1024 KB	832…0 KB	–	**TSXMRPC001MC**	0.076/ *0.168*
	192…3072 KB	2880…0 KB	–	**TSXMRPC003MC**	0.076/ *0.168*
	192…7168 KB	6976…0 KB	–	**TSXMRPC007MC**	0.076/ *0.168*

TSXMRP/MCP/MRP●●●●C

(1) For accessories, see page 1/17.
(2) For separate parts, see page 1/21.
(3) For replacement parts, see page 1/8 and page 1/9.

Modicon Quantum automation platform

Treatment for severe environments
"Conformal Coating"
I/O architectures

"Conformal Coating" remote I/O (RIO) modules (1)

Description	Cable	Safety	Certified ATEX Zone 2/22	Reference	Weight kg/lb
Quantum RIO head adaptor (1 max.)	Single cable	–	Yes	**140CRP93100C**	–
	Redundant cable	Non-interfering	Yes	**140CRP93200C**	–
	Redundant cable	Non-interfering	Yes	**140CRP31200C**	–
Quantum RIO drop adaptor (31 max.)	Single cable	–	Yes	**140CRA93100C**	–
	Redundant cable	Non-interfering	Yes	**140CRA93200C**	–
	Redundant cable	–	Yes	**140CRA31200C**	–

Quantum Ethernet drop optical fibre repeater (2)

Description	Cable	Safety	Certified ATEX Zone 2/22	Reference	Weight kg/lb
Ouantum Ethernet drop optical fibre repeater (3)	Multimode optical fibre (single or redundant)	–	–	**140NRP31200C**	–
	Single mode optical fibre (single or redundant)	–	–	**140NRP31201C**	–

RIO drop optical fibre repeater (2)

Description	Cable	Safety	Certified ATEX Zone 2/22	Reference	Weight kg/lb
RIO drop optical fibre repeater (3)	Multimode optical fibre (single or redundant)	Non-interfering	Yes	**140NRP95400C**	–
	Single mode optical fibre (single or redundant)	Non-interfering	Yes	**140NRP95401C**	–

"Conformal Coating" distributed I/O (DIO) modules

Description	Medium	Type of medium	Certified ATEX Zone 2/22	Reference	Weight kg/lb
DIO head-end adaptors no. 2 and no. 3 (4)	Single	Twisted pair cable	–	**140NOM21100C**	–
	Redundant	Twisted pair cable	Yes	**140NOM21200C**	–
	Single	Optical fibre cable	Yes	**140NOM25200C**	–

Description	Medium	Built-in power supply	Certified ATEX Zone 2/22	Reference	Weight kg/lb
DIO drop adaptors	Single	115/230 V ∿	–	**140CRA21110C**	–
		24 V ⎓	Yes	**140CRA21120C**	–
	Redundant	115/230 V ∿	–	**140CRA21210C**	–
		24 V ⎓	Yes	**140CRA21220C**	–

(1) For connection cables and rack accessories, see page 2/31.
(2) For topologies, see pages 2/32 and 2/33.
(3) Module declarable and configurable in Unity Pro Small/Medium/Large/Extra Large version 6.0 and later.
(4) For Modbus Plus network cables and accessories, see pages 5/48 to 5/53. For presentation, see page 5/44.

Modicon Quantum automation platform

Treatment for severe environments
"Conformal Coating"
discrete I/O modules

"Conformal Coating" discrete input modules (1)

Voltage	Modularity	Description	Logic	Safety	Certified ATEX Zone 2/22	Reference	Weight kg/*lb*
5 V ⎓ TTL	32 inputs	4 groups of 8 inputs	Negative	–	Yes	**140DDI15310C**	0.450/ *0.992*
24 V ⎓	32 inputs	4 groups of 8 inputs	Positive	Non-interfering *(2)*	Yes	**140DDI35300C**	0.300/ *0.661*
			Negative	–	Yes	**140DDI35310C**	0.300/ *0.661*
	96 inputs	6 groups of 16 inputs	Positive	–	–	**140DDI36400C**	0.300/ *0.661*
	32 inputs	4 groups of 8 inputs	Positive	–	–	**140DSI35300C**	0.300/ *0.661*
10…60 V ⎓	16 inputs	8 groups of 2 inputs	Positive	–	–	**140DDI84100C**	0.300/ *0.661*
	32 inputs	4 groups of 8 inputs	Positive	–	–	**140DDI85300C**	0.295/ *0.650*
125 V ⎓	24 inputs	3 groups of 8 inputs	Positive	–	–	**140DDI67300C**	0.300/ *0.661*
24 V ∿	16 inputs	No common point	–	–	–	**140DAI34000C**	0.300/ *0.661*
	32 inputs	4 groups of 8 inputs	–	–	–	**140DAI35300C**	0.340/ *0.750*
48 V ∿	32 inputs	4 groups of 8 inputs	–	–	–	**140DAI45300C**	0.300/ *0.661*
115 V ∿	16 inputs	No common point	–	–	–	**140DAI54000C**	0.310/ *0.683*
	16 inputs	2 groups of 8 inputs	–	–	–	**140DAI54300C**	0.300/ *0.661*
	32 inputs	4 groups of 8 inputs	–	–	–	**140DAI55300C**	0.330/ *0.728*
230 V ∿	16 inputs	No common point	–	–	–	**140DAI74000C**	0.350/ *0.772*
	32 inputs	4 groups of 8 inputs	–	–	–	**140DAI75300C**	0.300/ *0.661*
24 V ∿	16 inputs	No common point	Positive	–	Yes	**140SDI95300S**	0.300/ *0.661*

"Conformal Coating" discrete output modules (1)

Voltage	Modularity	Description	Logic	Safety	Certified ATEX Zone 2/22	Reference	Weight kg/*lb*
5 V ⎓ TTL	32 outputs	4 groups of 8 outputs	Negative	–	–	**140DDO15310C**	0.450/ *0.992*
24 V ⎓	32 outputs	4 groups of 8 outputs	Positive	Non-interfering *(2)*	Yes	**140DDO35300C**	0.450/ *0.992*
			Positive *(3)*	–	Yes	**140DDO35301C**	0.450/ *0.992*
			Negative	–	–	**140DDO35310C**	0.450/ *0.992*
	96 outputs	6 groups of 16 outputs	Positive	–	–	**140DDO36400C**	0.450/ *0.992*
10…30 V ⎓	32 outputs	4 groups of 8 outputs	Positive	–	–	**140DVO85300C**	0.300/ *0.661*
10…60 V ⎓	16 outputs	2 groups of 8 outputs	Positive	–	–	**140DDO84300C**	0.450/ *0.992*
24…125 V ⎓	12 outputs	2 groups of 6 outputs	Positive	–	–	**140DDO88500C**	0.450/ *0.992*
Relay 20…250 V a 5…150 V c	16 outputs	No common point	1 "NO" contact	–	Yes	**140DRA84000C**	0.410/ *0.904*
	8 outputs	No common point	2 "NC" and "NO" contacts	–	–	**140DRC83000C**	0.300/ *0.661*
24…48 V ∿	16 outputs	4 groups of 4 outputs	–	–	–	**140DAO84220C**	0.450/ *0.992*
24…115 V ∿	16 outputs	No common point	–	–	–	**140DAO84010C**	0.485/ *1.069*
24…230 V ∿	16 outputs	No common point	–	–	–	**140DAO84000C**	0.485/ *1.069*
	32 outputs	4 groups of 8 outputs	–	–	–	**140DAO85300C**	0.450/ *0.992*
100…230 V ∿	16 outputs	4 groups of 4 outputs	–	–	–	**140DAO84210C**	0.450/ *0.992*
24 V ∿	16 inputs	No common point	Positive	–	Yes	**140SDO95300S**	0.450/ *0.992*

(1) For accessories, connection cables, replacement parts, see page 3/15.
(2) Version ⩾ 1.
(3) Outputs protected against short-circuits and overloads by thermal monitoring.

Modicon Quantum automation platform

Treatment for severe environments

"Conformal Coating" discrete I/O modules and analog I/O modules

"Conformal Coating" discrete mixed I/O modules (1)

No.	Inputs	Outputs	Safety	Certified ATEX Zone 2/22	Reference	Weight kg/*lb*
24 I/O	**16 x 24 V ⎓ inputs** 2 groups of 8, positive logic	**8 x 24 V ⎓ outputs** 2 groups of 4, positive logic	–	Yes	**140DDM39000C**	0.300/ *0.661*
	16 x 125 V ∿ inputs 2 groups of 8	**8 x 125 V ∿ outputs** 2 groups of 4	–	–	**140DAM59000C**	0.450/ *0.992*
8 I/O	**4 x 125 V ⎓ inputs** 1 group of 4, positive logic	**4 outputs** **24…125 V ⎓** No common point, positive or negative logic	–	–	**140DDM69000C**	0.300/ *0.661*

"Conformal Coating" analog input modules (2)

Description	Range	Safety	Certified ATEX Zone 2/22	Reference	Weight kg/*lb*
8 high level channels 12-bit, unipolar	4...20 mA 1 ... 5 V	–	Yes	**140ACI03000C**	0.300/ *0.661*
16 high level channels 0…25,000 points, unipolar	0...20 mA, 0...25 mA 4...20 mA	Non-interfering	Yes	**140ACI04000C**	0.300/ *0.661*
8 RTD channels 13-bit	Ni 100, Ni 200, Ni 500, Ni1000, Pt 100, Pt 200, Pt 500, Pt1000	–	–	**140ARI03010C**	0.300/ *0.661*
8 thermocouple and low level channels 16-bit	Types J, K, E, T, S, R, B ± 25 mV, ± 100 mV	–	–	**140ATI03000C**	0.300/ *0.661*
8 high level channels 16-bit, bipolar	± 20 mA, 0…20 mA, 4…20 mA ± 10 V, ± 5 V, 0…10 V, 0…5 V, 1…5 V	–	Yes	**140AVI03000C**	0.300/ *0.661*

"Conformal Coating" analog output modules (2)

Description	Range	Safety	Certified ATEX Zone 2/22	Reference	Weight kg/*lb*
4 current channels 12-bit	4...20 mA	Non-interfering	Yes	**140ACO02000C**	0.300/ *0.661*
8 current channels 0…25,000 points	0...20 mA 0...25 mA 4...20 mA	–	Yes	**140ACO13000C**	0.300/ *0.661*
4 high level voltage channels 12-bit	± 5 V, ± 10 V 0…5 V, 0…10 V	–	Yes	**140AVO02000C**	0.300/ *0.661*
8 current channels 16-bit	4...20 mA	–	Yes	**140SAI94000S**	0.300/ *0.661*

"Conformal Coating" mixed analog I/O modules (2)

Description	Range	Safety	Certified ATEX Zone 2/22	Reference	Weight kg/*lb*
4 input channels, 14…16-bit	± 20 mA, 0…20 mA, 4…20 mA ± 5 V, ± 10 V, 0…5 V, 0…10 V, 1…5 V	–	Yes	**140AMM09000C**	0.300/ *0.661*
2 output channels 12-bit	4…20 mA				

(1) For accessories, connection cables, replacement parts, see page 3/15.
(2) For accessories, see page 3/23.

Modicon Quantum automation platform

Treatment for severe environments

"Conformal Coating" high-speed counter, high-speed inputs, Hot Standby system

"Conformal Coating" high-speed counter modules

Description	Safety	Certified ATEX Zone 2/22	Reference	Weight kg/*lb*
Counter module, 5 channels of 100 kHz max.	–	–	**140EHC10500C**	0.350/ *0.772*
Counter module, 2 channels of 500 kHz max.	–	–	**140EHC20200C**	0.350/ *0.772*

"Conformal Coating" high-speed input interrupt module

Description	Number of channels	Functions	Safety	Certified ATEX Zone 2/22	Reference	Weight kg/*lb*
High-speed input interrupt module	16 x 24 V ⎓ inputs	Interrupts, latching, high-speed inputs	–	–	**140HLI34000C**	–

"Conformal Coating" multifunction input module

Description	Number of channels	Functions	Safety	Certified ATEX Zone 2/22	Reference	Weight kg/*lb*
Multifunction input module	32 discrete inputs, supplied between 24 V and 125 V ⎓	Status logging 500 Hz counting 1 clock signal input	Non-interfering	–	**140ERT85420C**	–

140NOE771●1C

"Conformal Coating" Unity Hot Standby system *(1)*

Associated modules

Description	Type of architecture	Topology	Transparent Ready	Safety	Certified ATEX Zone 2/22	Reference	Weight kg/*lb*
RIO head adaptor modules	Remote I/O (RIO) and and mixed I/O	Single cable	–	–	Yes	**140CRP93100C**	–
		Redundant cable	–	Non-interfering	Yes	**140CRP93200C**	–
RIO drop adaptor	–	Single cable	–	–	Yes	**140CRA93100C**	–
		Redundant cable	–	Non-interfering	Yes	**140CRA93200C**	–
Ethernet TCP/IP network modules	Mixed	Bus or ring (copper or optical fibre)	Class B30	–	Yes	**140NOE77101C**	0.345/ *0.761*
			Class C30	Non-interfering	Yes	**140NOE77111C**	0.345/ *0.761*

(1) For optical fibre cables for Hot Standby architecture, connection kits and accessories, see page 2/41.

Modicon Quantum automation platform

Treatment for severe environments

"Conformal Coating" intrinsically safe,
high-speed counter inputs and outputs, high-speed inputs

Ruggedized Profibus DP network gateway *(1)*

Description	Protocols	Physical layer	Certified ATEX Zone 2/22	Reference	Weight kg/*lb*
Profibus Remote Master (PRM) module	Modbus TCP	1 Ethernet switch 2 x 10BASE-T/100BASE-TX ports	–	**TCSEGPA23F14FK**	–
	Profibus DP V1 and Profibus PA (via gateway)	1 isolated RS 485 Profibus DP port			

"Conformal Coating" AS-Interface cabling system *(2)*

140EIA92100C

Description	Number per Quantum PLC	Profile	Max. number of I/O	Certified ATEX Zone 2/22	Reference	Weight kg/*lb*
AS-Interface master module for Quantum PLCs	4 per local drop 4 per remote drop (RIO) 2 per distributed drop (DIO)	AS-Interface M2	31 discrete devices, i.e. 248 I/O	–	**140EIA92100C**	0.450/ *0.992*

"Conformal Coating" Modbus Plus communication devices *(3)*

Description		Medium	Type	Certified ATEX Zone 2/22	Reference	Weight kg/*lb*
Quantum Modbus Plus	**DIO drop adaptors** (including power supply)	Single	115/230 ∿	–	**140CRA21110C**	–
			24 ⎓	Yes	**140CRA21120C**	–
		Redundant	115/230 ∿	–	**140CRA21210C**	–
			24 ⎓	Yes	**140CRA21220C**	–
	DIO head-end adaptors no. 2 and no. 3	Single	Twisted pair cable	–	**140NOM21100C**	–
		Redundant	Twisted pair cable	Yes	**140NOM21200C**	–
		Single	Optical fibre cable	Yes	**140NOM25200C**	–

"Conformal Coating" asynchronous serial link module *(4)*

140ESI06210C

Description	Characteristic	Certified ATEX Zone 2/22	Reference	Weight kg/*lb*
ASCII serial link module with 2 RS 232 C ports	19.2 Kbps	–	**140ESI06210C**	0.300/ *0.661*
Backup battery holder module	2 type C lithium batteries, 3 V	–	**140XCP90000C**	–

Accessories

Description	Certified ATEX Zone 2/22	Reference	Weight kg/*lb*
40-way terminal block for fieldbus (IP20)	Yes	**140XTS00100**	–
40-way terminal block for fieldbus	Yes	**140XTS00200**	–
Empty module	Yes	**140XCP50000**	–

(1) Conformal Coating and extended operating temperatures between -25 and +70°C.
(2) For separate parts, see page 5/43.
(3) For Modbus Plus gateways and repeaters, and PC interface cards, see pages 5/44 to 5/53.
(4) For cables, see page 5/57.

Modicon Quantum automation platform

Standards, certifications and environmental conditions

Standards and certifications

Modicon Quantum PLCs have been developed to comply with the main national and international standards relating to electronic equipment for industrial automation systems.

■ Requirements specific to PLCs: functional characteristics, immunity, resistance, safety, etc: IEC/EN 61131-2, CSA 22.2 No. 142, UL 508
■ Merchant navy requirements from the main international bodies: ABS, BV, DNV, GL, LR, RINA, etc
■ Compliance with European Directives:
□ Low voltage: 2006/95/EC
□ Electromagnetic compatibility: 2004/108/EC
■ Electrical characteristics and self-extinguishing capacity of insulating materials: UL 746C, UL 94
■ Hazardous areas:
□ CSA 22.2 No. 213, Class I, Division 2, groups A, B, C and D
□ FM 3610, Class I, Division 2, groups A, B, C and D
■ Specific requirements for safety CPUs and modules:
□ IEC 61508
□ IEC 62021

Characteristics

Operating conditions and requirements relating to the environment			
Temperature	**Operation**	**°C**	0...+60 (IEC/EN 61131-2: +5...+55) *(1)*
	Storage	**°C**	-40...+85
Relative humidity	**Operation**	**%**	0…95 non-condensing
	Storage	**%**	0…95 non-condensing (according to IEC 61131-2) at 60°C (140°F)
Altitude		**m**	0…5000 max. during operation. For altitudes > 2000 m, the max. temperature of 60°C must be reduced by 6°C for each additional 1000 m

Protective treatment of Modicon Quantum PLCs

Modicon Quantum PLCs comply with "**TC**" *(Treatment for all Climates)* treatment requirements.
For installations in industrial production workshops or environments that correspond to "**TH**" *(Treatment for hot and Humid environments)* treatment, the PLCs must be housed in enclosures providing at least IP 54 protection as specified by IEC 60664 and NF C 20 040.

These PLCs themselves have an **IP 20 protection index** *(2)*.
They can therefore be installed without an enclosure in reserved access areas that do not exceed **pollution level 2** (control room with no dust-producing machinery or activity). Pollution level 2 does not take account of more severe environments, such as those where the air is polluted with dust, fumes, corrosive or radioactive particles, vapours or salts, moulds, insects, etc.

(1) **TSXP570244/104/154M** *and* **TSXP57454/4634/554/5634M** *CPUs: 0…+57°C (or 0…+67°C with* **TSXFAN** *fan modules) when certain I/O modules are mounted in the slot next to the above-mentioned CPUs.*
(2) If a slot is not occupied by a module, it must be fitted with a protective cover **TSXRKA02**.

Modicon Quantum automation platform

Standards, certifications and environmental conditions

Environmental tests

Description of test	Standards	Levels
Immunity to Low Frequency (LF) interference (CE) *(1)*		
Voltage and frequency variation	IEC/EN 61131-2	0.9/1,10 Un; 0.95/1.05 Fn for 30 min; 0.8 Un/0.9 Fn for 5 s; 1.2 Un/1.1 Fn for 5 s
DC voltage variation	IEC/EN 61131-1	0.85 Un...1.2 Un for 30 min with 5% ripple (peak values)
Third harmonic	IEC/EN 61131-2	10% Un; 0°/5 min...180°/5 min
Short interruptions	IEC/EN 61131-2	10 ms with power supply ∿; 1 ms with power supply ⎓
Voltage dips and pick-ups	IEC/EN 61131-2	Un-0-Un; Un for 60 s; 3 separate cycles of 10 s Un-0-Un; Un for 5 s; 3 separate cycles of 1 to 5 s Un-0.9 Udl; Un for 60 s; 3 separate cycles of 1 to 5 s

Un: nominal voltage
Fn: nominal frequency
Udl: undervoltage detection level

Description of test	Standards	Levels
Immunity to High Frequency (HF) interference (CE) *(1)*		
Electrical fast transients/Bursts	IEC 61000-4-4	Power supply ∿/⎓: 2 kV in wired mode/common mode Discrete I/O > 48 V: 2 kV in common mode; other ports: 1 kV in common mode
Hybrid surge	IEC 61000-4-5	2 kV between shielding and earth
Electrostatic discharge	IEC 61000-4-2	4 kV contact, 8 kV air
Radiated electromagnetic field	IEC 61000-4-3	10 V/m; 80 MHz...2 GHz Sinusoidal amplitude modulation 80%/1 kHz
Conducted interference, induced by radiated fields	IEC 61000-4-6	3 V: 0.15 MHz...80 MHz Sinusoidal amplitude modulation 80%/1 kHz
Electromagnetic emissions (CE) *(1) (2)*		
Interference voltage	IEC 61000-6-4 EN 55011 IEC 61131-2	Class A 150 kHz...500 kHz quasi-peak 79 dB (µV); average 66 dB (µV) 500 kHz...30 MHz quasi-peak 73 dB (µV); average 60 dB (µV)
Field interference	IEC 61000-6-4 EN 55011 IEC 61131-2	Class A, measurement at 10 m 30 MHz...230 MHz quasi-peak 40 dB (µV); 230 MHz...1 GHz quasi-peak 47 dB (µV)
Immunity to climatic variations		
Dry heat	IEC 60068-2-2 Bd	60°C for 16 hrs
Cold	IEC 60068-2-1 Ad	0°C for 16 hrs
Damp heat, steady state	IEC 60068-2-30 Ca	60°C with 93% relative humidity/96 hrs
Damp heat, cyclic	IEC 60068-2-3 Db	[55°C (E.O)] - 25°C with 93...95% relative humidity; 2 cycles: 12 hrs/12 hrs
Change of temperature, cyclic	IEC 60068-2-14 Nb	0...60°C/5 cycles: 6 hrs/6 hrs *(3)*
Resistance to climatic variations		
Dry heat, non-operating	IEC 60068-2-2 Bb	85°C for 96 hrs
Cold, non-operating	IEC 60068-2-1 Ab	-40°C for 96 hrs
Damp heat, non-operating	IEC 60068-2-30 Db	25...60°C with 93...95% relative humidity; 2 cycles: 12 hrs/12 hrs
Thermal shock, non-operating	IEC 60068-2-14 Na	-40...85°C; 2 cycles: 3 hrs/3 hrs

(1) Devices must be installed and wired in accordance with the instructions in the "Earthing and electromagnetic compatibility with PLCs" manual, electronic version in PDF format supplied on CD-ROM with the Unity Pro software packages or included on DVD reference **UNYUSE909CDM**.

(2) These tests are carried out with no enclosure, with the devices ***fixed on a metal grid*** *and wired in accordance with the recommendations in the manual.*

(3) **TSXP570244/104/154M** *and* **TSXP57454/4634/554/5634M** *CPUs: 0...+57°C (or 0...+67°C with* **TSXFAN** *fan modules) when certain I/O modules are mounted in the slot next to the above-mentioned CPUs.*

(CE) *Tests required by the CE European Directives and based on standard IEC/EN 61131-2.*

Environmental tests (continued)		
Description of test	**Standards**	**Levels**
Immunity to mechanical stress *(1)*		
Sinusoidal vibration	IEC/EN 60068-2-6 Fc	5...150 Hz/3.5 mm amplitude/1 g, cross-over frequency 9 Hz Endurance: 10 cycles of 1 octave/min per axis
	IACS E10 (marine)	3...100 Hz/1 mm amplitude/0.7 g, cross-over frequency 13.2 Hz Endurance: 90 min/axis, amplification coefficient < 10
Shocks	IEC 60068-2-27 Ea	15 g-11 ms; 3 shocks/direction/axis
Resistance to mechanical stress		
Controlled position free fall	IEC 60068-2-31 Ec	30° or 10 cm/2 falls
Random free fall, equipment in packaging	IEC 60068-2-32 method 1	1 m/5 falls
Safety of equipment and personnel *(2)*		
Dielectric strength and insulation resistance (CE)	UL 508, FM 3610 CSA 22-2 No. 142 IEC 61131-2	2 U + 1000 V/1 min. > 10 MΩ
Temperature rise	IEC 61131-2/UL 508 CSA 22-2 No. 142 and No. 213 FM 3610	Ambient temperature: 60°C
Electrical continuity (CE)	UL 508 CSA 22-2 No. 142	< 0.1 Ω/30 A/2 min
Leakage current (CE)	IEC 61131-2	< 3.5 mA fixed device
Protection provided by enclosures (CE)	CSA 22-2 No. 142 IEC 61131-2 UL 508	IP 20
Resistance to impacts	CSA 22-2 No. 142 IEC 61131-2/UL 508 FM 3610	500 g sphere: fall from 1.3 m

*(1) These tests are carried out with no enclosure, with the devices **fixed on a metal grid** and wired in accordance with the recommendations in the manual.*
(2) The devices must be installed and wired in accordance with the instructions given in the manual "Electromagnetic Compatibility of Industrial Networks and Fieldbuses".

(CE) *Tests required by the CE European Directives and based on standard IEC/EN 61131-2.*

Modicon Quantum automation platform

Standards, certifications and environmental conditions

When a control system has to operate in a corrosive environment, Quantum modules can be ordered with a special treatment. This treatment will extend the life of the module and enhance its environmental resistance capabilities.

Gas flow rate (power on)

Standard	Pollutant	Parts/ billion	Quantum protection level
EIA 364-65 level III	Cl_2	20 (± 5)	Conforms to the standard
	NO_2	200 (± 50)	Exceeds the standard (1250 parts/billion)
	H_2S	100 (± 20)	Conforms to the standard
ISA-S71.04GX severe	Cl_2	10	Exceeds the standard (1250 parts/billion)
	NO_2	1250	Conforms to the standard
	H_2S	50	Exceeds the standard (1250 parts/billion)
	SO_2	300	Conforms to the standard

Humidity (during operation)

Standard	Concentration (%)	Quantum protection level
IEC 60068-2-30	93 at 60°C	Conforms to the standard

Salt mist (not during operation)

Standard	Concentration (%)	Quantum protection level
IEC 60068-2-11	5 (± 1)	Exceeds the standard (5.7%)

Mould resistance

Standard	Quantum protection level
MIL-I-46058C	Designed to conform to the standard

Cyclic temperature variations (during operation)

Standard	Cycles	Quantum protection level
IEC/EN 60068-2-14	100 at 0…60°C	Conforms to the standard

Dust (not during operation)

Standard	Pollutant	Weight (%)	Quantum protection level
EIA 364-TP1 (pending)	Silica	36	Conforms to the standard
	Calcite	29	Conforms to the standard
	Iron oxide	12	Conforms to the standard
	Alumina	8	Conforms to the standard
	Gypsum	5	Conforms to the standard
	Paper fibre	3	Conforms to the standard
	Cotton fibre	3	Conforms to the standard
	Polyester fibre	2	Conforms to the standard
	Carbon black	1	Conforms to the standard
	Human hair	0.5	Conforms to the standard
	Cigarette ash	0.5	Conforms to the standard

For an exhaustive list of Modicon Quantum products available with special “Conformal Coating” treatment: see pages 8/3 to 8/9.

Technical information
Ethernet network
Infrastructure

Presentation
The ConneXium Industrial Ethernet Offer is comprised of a complete family of products and tools required to build the infrastructure of an Industrial Ethernet network. In the following pages, information for the proper design of a network and the selections of its components is offered.

Office Ethernet versus Industrial Ethernet
There are three main areas of differentiation between Ethernet applications in an office environment and Ethernet applications in an Industrial environment, they are:
- Environment
- Layout (not physical layer specification)
- Performance

Contrary to the office environment and even though ISO/IEC is working on it, there are not yet clearly defined specifications for Ethernet devices targeted to Industrial applications. The specifications of what it is called Industrial Ethernet are defined by different agencies or entities based upon its nature and based upon what the automation market has traditionally used.

The environmental specifications of Industrial Ethernet devices are today defined by the traditional agencies that define the environmental specifications for standard industrial devices (UL, CSA, CE, ...).

The IEEE 802.3 defines the physical layer specifications of the Ethernet network (types of connectors, distance between devices, number of devices, ...) while the 11801 (similarly to the TIAEIA 568B, and CENELEC EN 50173) provide installers the layout guidelines.

The performance specifications are actually being worked on by ISO/IEC.

Ethernet 802.3 principles
The Ethernet 802.3 Link Layer is based on a collision detection mechanism (CSMA CD): every node whose information has collided on the network realizes the collision and re-sends the information.
The process of re-sending information causes delays in its propagation and could affect the application.

A collision domain is a group of Ethernet end devices interconnected by hubs or repeaters (devices that receive information and send it out to all their other ports, no matter where the destination device is connected): it means that all devices will be affected by collisions.

With the availability of full duplex switches (devices that receive information and send it out just through the port to which the destination device is connected) the collision domains have disappeared.

Therefore, for industrial automation applications it is strongly recommended to use in every case full duplex switches to interconnect devices. In this way the collision domains will be eliminated completely.

Technical information
Ethernet network
Infrastructure

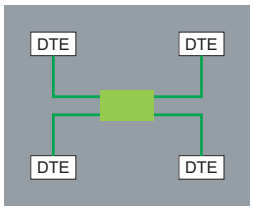

Different network topologies

Star topology

In a star topology, all devices are connected though an intermediate device.

Ethernet Star
In an Ethernet star the intermediate device may be a **hub** or a **switch**. Star is the commonly used topology in corporate networks and as of today is adopted in almost every automation application. As mentioned previously, for industrial Ethernet applications the use of full duplex switches as central device rather than hubs is strongly recommended.

Deploying Star topologies with ConneXium
With any of the hubs and switches offered by the ConneXium offer, star topologies can be implemented.

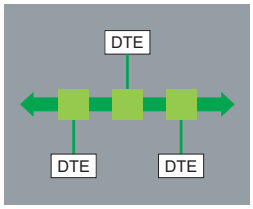

Bus topology

The bus is one of the most adopted topologies in traditional industrial automation networks. A single trunk cable connects all the devices on the network usually via passive or active T-connectors, or directly chained (daisy chain). Devices usually can be installed anywhere along the bus.

Ethernet Bus
An Ethernet bus can be deployed by interconnecting **hubs** and/or **switches** in line and considering every one of them as the connection for a drop device. A limited number of hubs and an unlimited number of switches can be interconnected to achieve this purpose.

Deploying Bus topologies with ConneXium
With any of the hubs and switches offered by the ConneXium offer bus topologies can be implemented.
Specially suitable for this purpose are the switches with 1 or 2 fiber optic ports:
- The 2 fiber optic ports switches could be for connection of inline devices.
- The single fiber optic port switches could be used for the connection of end line devices.

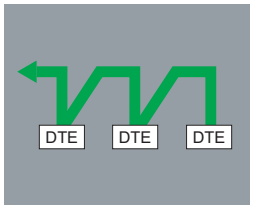

Daisy chain topology

Daisy chain -along bus- is the other most adopted topology in traditional industrial automation networks. Cable segments interconnect multiple devices, being the devices “part ” of the network cable.

Ethernet daisy chain
Daisy chain is not today a very common Ethernet topology, but it will soon become one of the most popular ones when enough quantity of devices is made available.
In Ethernet daisy chain the devices have:
- **2 Ethernet ports** and
- **1 embedded switch**.

Schneider Electric is releasing to the Industrial market Industrial Ethernet devices to be connected in daisy chain architectures.

Deploying daisy chain topologies
To deploy daisy chain topologies, no hubs or switches are required. All devices have an embedded switch.
Dual port Ethernet at the device level is an absolute integral component for daisy chain topologies.
One port of the device connects to one port of the neighboring device on either side of the device. These neighboring connections make up the daisy chain.

Ethernet switches can be employed in a daisy chain topology when multiple scan chains are in use by the controlling device. It is expected that the Ethernet switch will be located near the controlling device with the different scan chains emanating from the switch.

Different network topologies (continued)

Daisy chain topology (continued)

Limitations of daisy chain:
Limitations of daisy chain to insure the operational integrity of the network and meet performance metrics, are:
■ Dual port Ethernet devices only support 10 Mbit/s and/or 100 Mbit/s operational speeds and must use one or the other.
■ The network will operate only as fast as the slowest device that is connected to the network
■ In order to improve network traffic latency the numbers of devices in a single scan chain, has been limited to 32 devices. Limiting a single scan chain to 32 devices the time for a round trip of a packet through the daisy Chain is expected less than 5 milliseconds.

The maximum packet latency of a packet passing through any device in a scan chain is no more than 10 µs.

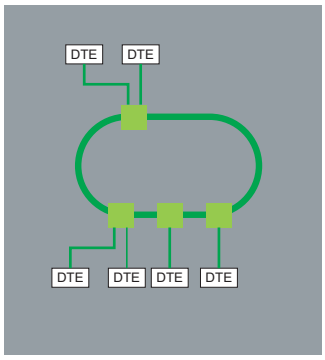

Ring topology

In a ring topology, all devices or network infrastructure components are connected in a loop. Through this type of topology, a type of network redundancy is achieved.

Ethernet Ring
Ethernet rings are usually the backbones of applications in which high availability is required. If ring topology is required then switches that support this feature should be ordered.

Deploying Ring topologies using ConneXium.
The ConneXium line offers hubs and switches that allow the deployment of single and coupled self-healing rings. There is additional information about this topic page 8/19.

Distance limitations and number of devices per segment

Based upon the 802.3, the distance limits and the numbers of devices in cascade are the following:

Type	Maximum segment length *(1)*	Maximum segment length (offered by ConneXium devices)	Maximum number of hubs in cascade	Maximum number of switches in cascade
10BASE-T	100 m	100 m	4	Unlimited
100BASE-TX	100 m	100 m	2	Unlimited
1000BASE-T	100 m	100 m	–	Unlimited
10BASE-FL	2000 m	3100 m *(2)*	11 (fiber ring)	–
100BASE-FX	412 m/2000 m	4000 m with multimode fiber, 32.500 m with monomode fiber *(3)*	–	Unlimited
1000BASE-SX	275 m	–	–	Unlimited

(1) Based on 802.3, full duplex/half duplex.
(2) Depends on the optical fiber budget and fiber attenuation.
(3) Depends on the optical fiber budget and fiber attenuation, typical specification is 2 km for multimode and 15 km for monomode.

Physical Media

The Ethernet 802.3 defines the Physical Layer. A summary of the most common ones are shown below:

Type	Data rate	Cable type		Connector type	
		Defined by 802.3	Recommended by Schneider Electric	Defined by 802.3	Recommended by Schneider Electric
10BASE-T	**10 Mbit/s**	CAT 3 - UTP	CAT 5E - STP	RJ45	RJ45
100BASE-TX	**100 Mbit/s**	CAT 5 - UTP	CAT 5E - STP	RJ45	RJ45
1000BASE-T	**1 Gbit/s**	CAT 5 - UTP	CAT 5E - STP	RJ45	RJ45
10BASE-FL	**10 Mbit/s**	Two multimode fiber optic cables typically 62.5/125 µm fiber, 850 nm light wavelength	Two multimode fiber optic cables typically 62.5/125 µm fiber, 850 nm light wavelength	ST	ST
100BASE-FX	**100 Mbit/s**	Two multimode optical fibers typically 62.5/125 µm multimode fiber, 1300 nm light wavelength	Two multimode optical fibers typically 62.5/125 µm multimode fiber, 1300 nm light wavelength	ST	SC
		–	Two monomode optical fibers typically 9/125 µm multimode fiber, 1300 nm light wavelength	–	SC
1000BASE-SX	**1 Gbit/s**	Two 62.5/125 or 50/125 multimode optical fibers, 770 to 860 nm light wavelength	Two 62.5/125 µm or 50/125 m multimode optical fibers , 1300 nm light wavelength	SC	LC
1000BASE-LX	**1 Gbit/s**	–	Two 9/125 µm monomode optical fibers, 1300 nm light wavelength	–	LC

Nota : *The above are the specifications defined by IEEE 802.3. However some of the cables are no longer being developed. For instance, for 10BASE-T and 100BASE-TX, a CAT-5E cable is used.*

Management

The Ethernet devices in general (end devices and the cabling devices) devices may be divided in two categories: unmanaged and managed devices:
■ **The unmanaged** devices are those which there is no possibility to configure or control any of the parameters of the device.
■ **The managed** devices are those which there is possibility to configure or control the parameters of the device (manage them) and to access to its internal information.

The ConneXium product line offers both types of devices.

There is also a third category of devices not specifically defined but is important to understand the difference. These devices only allow access to its information but can not be controlled and/or configured. Usually these devices are considered in the category of managed devices.

Managed devices

The managed devices offer the following features:
■ **Traffic optimization and filtering,** goal is to increase the bandwidth, or the traffic capacity in a network (some of the features in this area are message and port priority, flow control, multicast filtering, broadcast limiting, IGMP snooping, Vlan, etc.).
■ **VLAN,** a virtual LAN (VLAN) consists of a group of network participants in one or more network segments who can communicate with each other as if they belonged to the same LAN.
VLANs are based on logical (instead of physical) links. The biggest advantage of VLANs is their possibility of forming user groups based on the participant function and not on their physical location or medium.
Since broad/multicast data packets are transmitted exclusively within a virtual LAN, the remaining data network is unaffected. VLAN can also serve as a security mechanism to block unwanted Unicast messages.
■ **Security,** feature that helps the user protect the switch from unauthorized access that could result in changes in its configuration and impact the traffic going through the switch (some of the features in this area are port security, read/write community name, etc.).
User can also set up the switch so that it blocks messages coming from unauthorized “devices” source addresses connected to the switch.
■ **Time Synchronization,** feature that allows all the devices in the network to be synchronized on time.
■ **Network Redundancy,** to develop high availability applications.
■ …

Technical information
Ethernet network
Infrastructure

Redundancy

To develop high availability applications, “redundancy” in the networking infrastructure is the answer. By implementing a single ring architecture, or a coupled ring one, can protect themselves against losses of network segments.

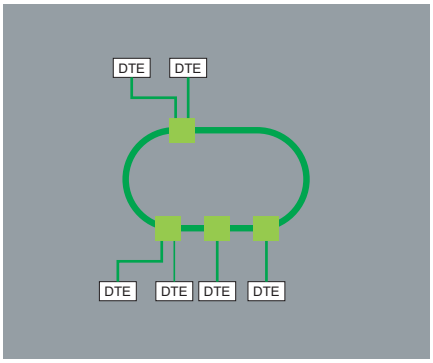

Single Ring

The first level of redundancy is achieved by implementing a single ring. The ConneXium switches allow the set up of backbone ring configurations.

The ring is constructed using the HIPER-Ring ports. If a section of the line fails, a ring structure of up to 50 switches transforms back to a line-type configuration within 0.5 seconds.

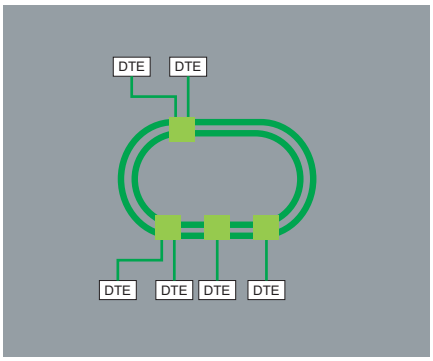

Dual Ring

The second level of redundancy is achieved by implementing a dual ring. The control intelligence built into the ConneXium switches allows the redundant coupling of HIPER-Rings and network segments.

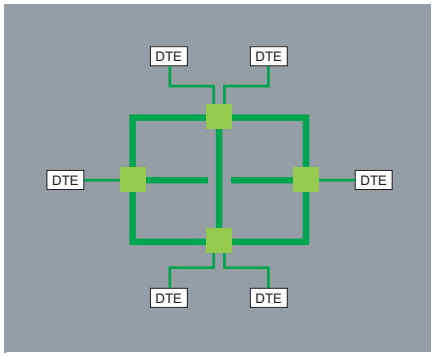

Mesh topology using the rapid “Spanning Tree” protocol

A third level of redundancy can be achieved by implementing a mesh topology.
In simple terms,“Spaning Tree” is a protocol that ensures a single path for the signal, when multiple paths exist. If the active path is broken, the “Spanning Tree” protocol enables one of the alternatives paths.

The ConneXium switches offer the possibility.

Some countries require certain electrical components to undergo certification by law. This certification takes the form of a certificate of conformity to the relevant standards and is issued by the official body in question. Where applicable, certified devices must be labeled accordingly. Use of electrical equipment on board merchant vessels generally implies that it has gained prior approval (i.e. certification) by certain shipping classification societies.

Abbreviation	Certification body	Country
CSA	Canadian Standards Association	Canada
RCM (formerly C-Tick)	Australian Communications and Media Authority	Australia, New Zealand
EAC (formerly GOST)	Eurasian conformity	Russia and customs union
UL	Underwriters Laboratories	USA

Abbreviation	Classification authority	Country
IACS	International Association of Classification Societies	International
ABS	American Bureau of Shipping	USA
BV	Bureau Veritas	France
DNV	Det Norske Veritas	Norway
GL	Germanischer Lloyd	Germany
LR	Lloyd's Register	UK
RINA	Registro Italiano Navale	Italy
RMRS	Russian Maritime Register of Shipping	Russia
RRR	Russian River Register	Russia
CCS	China Classification Society	China

***Note**: Due to the merger between DNV and GL certification, DNV/GL will be renewed as a single certificate from 2016.*

The tables below provide an overview of the situation as at September 9th, 2015, in terms of which certifications (listed next to their respective bodies) have been granted or are pending for our automation products.
Up-to-date information on which certifications have been obtained by products bearing the Schneider Electric brand can be viewed on our website: **www.schneider-electric.com**

Product certifications

Certified
Certification pending

	Certifications						
	UL	**CSA**	**RCM**	**EAC**	**Hazardous locations** *(1)* **Class I, div 2**	*(6)*	**TÜV Rheinland**
	USA	Canada	Australia	Russia	USA, Canada		
Modicon OTB							
Modicon STB					FM	Zone 2 *(2)(5)*	
Modicon Telefast ABE 7							
ConneXium					*(2)*		
Magelis iPC/GTW		*(3)*		*(2)*	*(3)*	Zone 2/22 *(2)*	
Magelis XBT GT		*(3)*		*(2)*	*(2) (3)*	Zone 2/22 *(2)(5)*	
Magelis XBT GK		*(3)*			*(3)*		
Magelis XBT N/R/RT					CSA	Zone 2/22 *(2)(5)*	
Magelis HMI GTO		*(3)*		*(2)*	*(3)*	*(2)*	
Magelis HMI STO/STU		*(3)*		*(2)*	*(2)(3)*	*(2)*	
Modicon M340					CSA *(8)*	Zone 2/22 *(2)*	
Modicon M580					CSA *(8)*	Zone 2/22 *(2)*	
Modicon X80 I/O					CSA *(8)*	Zone 2/22 *(2)*	
Modicon Momentum					FM		
Modicon Premium				*(2)*	CSA		
Modicon Quantum				*(2)*	CSA, FM *(2)*	Zone 2/22 *(2)*	
Modicon Quantum Safety				*(2)*	CSA	Zone 2/22 *(2)*	SIL 2, SIL 3 *(7)*
Preventa XPSMF							SIL 3 *(7)*
Modicon TSX Micro					CSA		
Phaseo	*(3)*						
Twido	*(4)*	*(4)*			CSA/UL *(4)*		

(1) Hazardous locations: According to ANSI/ISA 12.12.01 and/or CSA 22.2 No. 213, and/or FM 3611, certified products are only approved for use in hazardous locations categorized as Class I, division 2, groups A, B, C, and D, or in non-classified locations.
(2) Depends on product; please visit our website: www.schneider-electric.com.
(3) North American certification cULus (Canada and USA).
(4) Except for AS-Interface module TWD NOI 10M3, CE only.
(5) For zones not covered by this specification, Schneider Electric offers a solution as part of the CAPP (Collaborative Automation Partner Program). Please consult our Customer Care Center.
(6) Refer to the instructions supplied with each ATEX and/or IECEx certified product.
(7) According to IEC 61508. Certified by TÜV Rheinland for integration into a safety function of up to SIL 2 or SIL 3.
(8) CSA Hazardous Location according to ANSI/ISA 12.12.01, CSA 22.2 No. 213, and FM 3611.

Merchant navy certifications

Shipping classification societies

Certified
Certification pending

	ABS	BV	DNV	GL	KRS	LR	RINA	RMRS	RRR	PRS	CCS
	USA	France	Norway	Germany	Korea	Great Britain	Italy	Russia	Russia	Poland	China
Modicon OTB											
Modicon STB	*(1) (2)*	*(2)*	*(2)*	*(2)*		*(2)*	*(2)*				
Modicon Telefast ABE 7											
ConneXium											
Magelis iPC/GTW				*Bridge (2)*							
Magelis XBT GT	*(2)*	*(2)*	*(2)*	*(2)*		*(2)*	*(2)*	*(2)*	*(2)*		
Magelis XBT GK											
Magelis XBT N/R											
Magelis XBT RT											
Magelis HMI GTO											
Magelis HMI STO/STU		*(2)*	*(2)*								
Modicon M340								*(2)*	*(2)*		
Modicon M580											
Modicon X80 I/O								*(2)*	*(2)*		
Modicon Momentum											
Modicon Premium											
Modicon Quantum											
Modicon TSX Micro											
Phaseo											
Twido											

(1) Also covers US Navy requirements **ABS-NRV** part 4.
(2) Depends on product; please visit our website: www.schneider-electric.com.

EC regulations

European Directives

The open nature of the European markets assumes harmonization between the regulations set by the member states of the European Union. European Directives are texts intended to remove restrictions on free circulation of goods and which must be applied within all European Union states.
Member states are obligated to incorporate each Directive into their national legislation, and to simultaneously withdraw any regulations that contradict it.
Directives - and particularly those of a technical nature with which we are concerned - merely set out the objectives to be fulfilled (referred to as “essential requirements”). Manufacturers are responsible for taking the necessary measures to establish that their products conform to the requirements of each Directive applicable to their equipment.
As a general rule, manufacturers certify compliance with the essential requirements of the Directive(s) that apply to their products by applying a CE mark. The CE mark is affixed to our products where applicable.

Significance of the CE mark

The CE mark on a product indicates the manufacturer's certification that the product conforms to the relevant European Directives; this is a prerequisite for placing a product that is subject to the requirements of one or more Directives on the market and allowing its free circulation within European Union countries. The CE mark is intended for use by those responsible for regulating national markets.
Where electrical equipment is concerned, conformity to standards indicates that the product is fit for use. Only a warranty by a well-known manufacturer can provide reassurance of a high level of quality.
As far as our products are concerned, one or more Directives are likely to apply in each case; in particular:

- The Low Voltage Directive (2006/95/EC)
- The Electromagnetic Compatibility Directive (2004/108/EC)
- The ATEX CE Directive (94/9/EC)

Hazardous substances

These products are compatible with:

- The WEEE Directive (2012/19/EU)
- The RoHS Directive (2011/65/EU)
- The China RoHS Directive (Standard SJ/T 11363-2006)
- The REACH regulations Directive (EC 1907/2006)

Note: *Documentation on sustainable development is available on our website www.schneider-electric.com (product environmental profiles and instructions for use, ROHS and REACH directives) .*

End of life (WEEE)

End of life products containing electronic cards must be dealt with by specific treatment processes.
When products containing backup batteries are unusable or at end of life they must be collected and treated separately. Batteries do not contain a percentage by weight of heavy metals above the limit specified by European Directive 2006/66/EC.

A dedicated services offer for your installed base

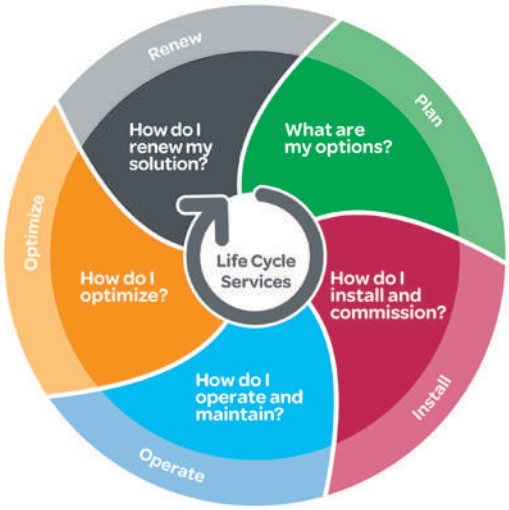

Schneider Electric, with its experts, products and dedicated tools, provides services such as system design, consultancy, maintenance contracts, modernisation of facilities or delivering projects.

The Schneider Electric services offer is structured around several key areas:

- Maintenance and support services:
  - A set of services to help maintain reliability and availability of automated control systems. These services may be the subject of a bespoke maintenance contract to meet your requirements more closely.
- Consultancy services:
  - Diagnostics of the installed base
- Modernization solutions:
  - Migration solutions including consultancy, expertise, tools and technical support to help ensure a smooth transition to newer technology while keeping the wiring and the encoding in most cases.

Customization services are also available to accommodate specific requirements. For more information, please consult the specific pages on our website www.schneider-electric.com/automationservices

Maintenance and support services

Spare parts, exchanges and repairs

Everything you need to get equipment working again as quickly as possible

Solutions to respond very quickly to requests for spare parts, exchanges and repairs to your installed automation equipment (automation platforms, Human Machine Interfaces, drives, distributed I/O):

- Spare parts management:
  - Identification of critical parts
  - Stock of spare parts: a Schneider Electric owned stock of spare parts, on your site or in one of our warehouses, with immediate availability on site or a contractually agreed delivery time if stored off site
  - Testing of spare parts stored on site
  - Automatic stock filling
- Repairs:
  - Broken down products are repaired in a network of worldwide repair centres. For each repaired product, our experts provide a detailed report.
- On-site repair:
  - Our experts' knowledge and expertise
  - Monitoring of specific repair procedures
  - Availability of our teams to respond 24/7
- Exchanges:
  - With standard replacements, receive a new or reconditioned product before the broken down product has even been sent back
  - Fast exchanges offer the option to receive the replacement product within 24 hours (in Europe)

Preventive maintenance

Improving and guaranteeing the long-term reliability and performance of your installations

Schneider Electric's preventive maintenance expert assesses your site, the equipment to be managed and sets up a maintenance program to accommodate specific requirements. A list is provided of the tasks to be performed and their frequency, including site-specific tasks, describing how preventive maintenance is to be managed.

Extended warranty

An additional manufacturer warranty covering replacement or repair of the equipment

The extended warranty offers the option to take out a 3-year warranty. The warranty period can vary according to the geographical area, consult your Customer Care Centre.

Online support

Access to dedicated experts

Priority access to experts who can answer technical questions promptly concerning equipment and software both on sale and no longer commercially available.

Software subscription

Access to software upgrades and new features

By subscribing to software updates, users are able to:

- Purchase licences
- Receive updates, upgrades, software migrations and transitions
- Download software from Schneider Electric's software library

A dedicated services offer for your installed base

Consultancy services

M2C (Maintenance and Modernization Consultancy)

Professional tools and methods, proven experience of managing obsolescence and updating installed bases, to reduce downtimes and improve performance

With our maintenance and modernization consultancy offer, Schneider Electric will help you check the state of your installed base by:
- Defining the scope and depth of the analysis in collaboration with you
- Collecting the technical data without shutting down production
- Analyzing and identifying avenues for improvement
- Producing a recommendation plan

Customer benefits:
- Learning about the components that make up the installed base and how up-to-date they are
- Better downtime anticipation
- Expert advice designed to improve performance

Modernization solutions

Migration to PlantStruxure

Proven expertise, tools and methods to give you a clear vision of the improvement opportunities and guide you toward a successful modernization project

PlantStruxure™

To find out more about PlantStruxure architectures, please visit our website www.schneider-electric.com/PlantStruxure

Schneider Electric offers a gradual program of modernization through a series of products, tools and services that allow you to upgrade to newer technology. There are several stages in this gradual modernization program:
- Partial program: replacement of an old component with a new one
- Staggered program: gradual incorporation of new offers in the system
- Total program: total renovation of the system

The table below lists our various migration offers:

Wide range of migration offers

Solution		Change the CPU	Keep the I/O racks & wiring	Change the I/O racks & keep the wiring	Migrate your application	Manage your project	Execute your project
Platform *(1)*	TSX47 to TSX107	☑	☑	☑	☑	☑	☑
	April series 1000			☑	☑	☑	☑
	Modicon ●84, Compact	☑	☑	☑	☑	☑	☑
	April SMC				☑	☑	☑
	Merlin Gerin PB				☑	☑	☑
	AEG	☑	☑	☑	☑	☑	☑
	Symax	☑			☑	☑	☑
	Rockwell SLC500			☑	☑	☑	☑

☑ Service available

(1) Our migration service offer also includes SCADA, Human Machine Interfaces, drives, communication networks and distributed I/O.

Customization services

Schneider Electric is able to meet your specific requirements and provide you with adapted products:
- Protective coating for Human Machine Interfaces, automation platforms and distributed I/O modules for use in harsh environments
- Customized cable lengths to match your specific needs
- Customized front panels for Human Machine Interfaces

***Note**: To check availability of services required, please contact our Customer Care Centre.*

Product reference index

1 to 9

110XCA20300 1/13 5/53 6/23
110XCA20400 5/53
110XCA28201 1/13 5/53 6/23
110XCA28202 1/13 5/53 6/23
110XCA28203 1/13 5/53 6/23
140ACI03000 3/22
140ACI03000C 8/7
140ACI04000 3/22 6/6 6/38
140ACI04000C 8/7
140ACO02000 3/22 6/6 6/38
140ACO02000C 8/7
140ACO13000 3/22
140ACO13000C 8/7
140AMM09000 3/22
140AMM09000C 8/7
140ARI03010 3/22
140ARI03010C 8/7
140ATI03000 3/22
140ATI03000C 8/7
140AVI03000 3/22
140AVI03000C 8/7
140AVO02000 3/22
140AVO02000C 8/7
140CPS11100 1/21
140CPS11100C 8/4
140CPS11420 1/21
140CPS11420C 8/4
140CPS12420 1/21 6/5 6/38
140CPS12420C 6/5 8/4
140CPS21100 1/21
140CPS21100C 8/4
140CPS21400 1/21
140CPS21400C 8/4
140CPS22400 1/21 6/5 6/38
140CPS22400C 6/5 8/4
140CPS41400 1/21
140CPS41400C 8/4
140CPS42400 1/21
140CPS42400C 8/4
140CPS51100 1/21
140CPS51100C 8/4
140CPS52400 1/21
140CPS52400C 8/4
140CPU11302C 8/3
140CPU11303C 8/3
140CPU31110 1/12
140CPU31110C 8/3
140CPU43412AC 8/3
140CPU43412U 1/12
140CPU43412UC 8/3
140CPU53414BC 8/3
140CPU65150 1/12 2/22 5/40
140CPU65150C 8/3
140CPU65160 1/12 2/22 5/40
140CPU65160C 8/3
140CPU65160S 6/5 6/23 8/3
140CPU65260 1/12 2/22 5/40
140CPU65260C 8/3
140CPU65860 1/12 2/22 5/40
140CPU65860C 8/3
140CPU67060 1/12 2/40
140CPU67060C 8/3
140CPU67160 1/12 2/23 2/40
140CPU67160C 8/3
140CPU67160S 6/5 6/17 6/23 8/3
140CPU67260 1/12 2/23 2/40
140CPU67260C 8/3
140CPU67261 1/12 2/23 2/40
140CPU67261C 8/3
140CPU67861 1/12 2/23 2/40
140CPU67861C 8/3
140CRA21110 5/52
140CRA21110C 8/5 8/9
140CRA21120 5/52
140CRA21120C 8/5 8/9
140CRA21210 5/52
140CRA21210C 8/5 8/9
140CRA21220 5/52
140CRA21220C 8/5 8/9
140CRA31200 2/22
140CRA31200C 8/5
140CRA93100 2/31
140CRA93100C 8/5 8/8
140CRA93200 2/31 6/6 6/17 6/38
140CRA93200C 6/17 8/5 8/8
140CRP31200 2/22 2/40
140CRP31200C 8/5
140CRP93100 2/31 2/40
140CRP93100C 8/5 8/8
140CRP93200 2/31 2/40 6/6 6/17 6/38
140CRP93200C 6/17 8/5 8/8
140DAI34000 3/14
140DAI34000C 8/6
140DAI35300 3/14
140DAI35300C 8/6
140DAI45300 3/14
140DAI45300C 8/6
140DAI54000 3/14
140DAI54000C 8/6
140DAI54300 3/14
140DAI54300C 8/6
140DAI55300 3/14
140DAI55300C 8/6
140DAI74000 3/14
140DAI74000C 8/6
140DAI75300 3/14
140DAI75300C 8/6
140DAM59000 3/15
140DAM59000C 8/7
140DAO84000 3/14
140DAO84000C 8/6
140DAO84010 3/14
140DAO84010C 8/6
140DAO84210 3/14
140DAO84210C 8/6
140DAO84220 3/14
140DAO84220C 8/6
140DAO85300 3/14
140DAO85300C 8/6
140DDI15310 3/14
140DDI15310C 8/6
140DDI35300 3/14 6/6 6/38
140DDI35300C 8/6
140DDI35310 3/14
140DDI35310C 8/6
140DDI36400 3/14
140DDI36400C 8/6
140DDI67300 3/14
140DDI67300C 8/6
140DDI84100 3/14
140DDI84100C 8/6
140DDI85300 3/14
140DDI85300C 8/6
140DDM39000 3/15
140DDM39000C 8/7
140DDM69000 3/15
140DDM69000C 8/7
140DDO15310 3/14
140DDO15310C 8/6
140DDO35300 3/14 6/6 6/38
140DDO35300C 8/6
140DDO35301 3/14
140DDO35301C 8/6
140DDO35310 3/14
140DDO35310C 8/6
140DDO36400 3/14
140DDO36400C 8/6
140DDO84300 3/14
140DDO84300C 8/6
140DDO88500 3/14
140DDO88500C 8/6
140DRA84000 3/14
140DRA84000C 8/6
140DRC83000 3/14
140DRC83000C 8/6
140DSI35300 3/14
140DSI35300C 8/6
140DVO85300 3/14
140DVO85300C 8/6
140EHC10500 4/5
140EHC10500C 8/8
140EHC20200 4/5
140EHC20200C 8/8
140EIA92100 5/43
140EIA92100C 8/9
140ERT85420 4/9 6/6 6/38
140ERT85420C 8/8
140ESI06210 5/57
140ESI06210C 8/9
140HLI34000 4/7
140HLI34000C 8/8
140NOC77101 5/39
140NOC78000 2/22 2/40 5/39
140NOC78100 2/22 2/40 5/39
140NOE77101 2/40 5/41
140NOE77101C 8/8
140NOE77111 2/40 5/41 6/6 6/17 6/38
140NOE77111C 6/17 8/8
140NOM21100 5/52
140NOM21100C 8/5 8/9
140NOM21200 5/52
140NOM21200C 8/5 8/9
140NOM25200 5/52
140NOM25200C 8/5 8/9
140NRP31200 2/22
140NRP31200C 8/5
140NRP31201 2/22
140NRP31201C 8/5
140NRP95400 2/31 6/6 6/17 6/38
140NRP95400C 6/17 8/5
140NRP95401C 2/31 6/6 6/17 6/38 8/5
140NWM10000 5/41
140SAI94000S 6/5 6/27 6/33 8/7
140SDI95300S 6/5 6/27 6/33 8/6
140SDO95300S 6/5 6/27 6/33 8/6
140XBE10000 1/17 2/23 2/31
140XBE10000C 8/4
140XBP00300 1/17
140XBP00300C 8/4
140XBP00400 1/17
140XBP00400C 8/4
140XBP00600 1/17 6/6 6/38
140XBP00600C 8/4
140XBP01000 1/17 6/6 6/38
140XBP01000C 8/4
140XBP01600 1/17 6/6 6/38
140XBP01600C 8/4
140XCA71703 1/17 2/23 2/31
140XCA71706 1/17 2/23 2/31
140XCA71709 1/17 2/23 2/31
140XCP20000 3/15 3/23 6/33 6/39
140XCP40100 1/17 6/39
140XCP40200 1/17 6/39
140XCP50000 3/15 6/39 8/9
140XCP51000 3/15 6/39
140XCP60000 3/15 6/33 6/39
140XCP90000 4/9 5/57
140XCP90000C 8/9
140XTS00100 3/15 3/23 4/5 6/6 6/33 6/39 8/9
140XTS00200 3/15 3/23 4/5 4/9 6/6 6/33 6/39 8/9
140XTS00500 1/21 5/53 6/39
170DNT11000 5/55
170MCI02010 5/53
170MCI02036 5/53
170MCI02080 5/53
170MCI02120 5/53
170MCI02180 5/53
170MCI04110 5/53
170NEF11021 5/52
170NEF16021 5/52
170PNT11020 5/52
170PNT16020 5/52
170XTS02000 5/53
170XTS02100 5/53
170XTS02200 5/53

8

Product reference index

170XTS02300 5/53
170XTS04000 5/53
170XTS04100 5/53
170XTS04200 5/53
416NHM21234 5/52
416NHM30030 5/52
416NHM30032 5/52
424244739 5/53
43509446 2/32
490NAA27101 5/53
490NAA27102 5/53
490NAA27103 5/53
490NAA27104 5/53
490NAA27106 5/53
490NAC72100 5/53
490NAD91103 5/55
490NAD91104 5/55
490NAD91105 5/55
490NOR00003 2/23, 2/41
490NOR00005 2/23, 2/41
490NRP25300 5/52
490NRP25400 5/52
490RIO00211 2/32
490RIO00400 2/33
490RIO00406 2/33
490RIO00411 2/33
490RIO0C411 2/33
490RIO0S411 2/33
520402000 2/32
520411000 2/41
520422000 2/32
520480000 2/32
520614000 2/32
600513000 2/32
600544000 2/33
600545000 2/32, 2/41
600558000 2/33
8030CRM931 4/11
975750000 2/31
975951000 2/31
990NAA21510 5/53
990NAA26320 1/13, 5/57
990NAA26350 1/13, 5/57
990NAD21110 1/13, 5/53
990NAD21130 1/13, 5/53
990NAD21810 1/13, 6/23
990NAD21830 1/13, 6/23
990NAD23000 5/53
990NAD23010 5/53
990NAD23011 5/53
990NAD23012 5/53

A

ABE7ACC02 7/18
ABE7ACC10 7/18
ABE7ACC11 7/18
ABE7ACC12 7/15
ABE7ACC21 7/18
ABE7BV10 7/18
ABE7BV20 7/18
ABE7CPA01 7/16
ABE7CPA02 7/16
ABE7CPA03 7/16
ABE7CPA12 7/16
ABE7CPA13 7/16
ABE7CPA21 7/16
ABE7CPA31 7/16
ABE7CPA31E 7/16
ABE7CPA410 7/16
ABE7CPA412 7/16
ABE7FU012 7/18
ABE7FU050 7/18
ABE7FU100 7/18
ABE7FU200 7/18
ABE7FU400 7/18
ABE7FU630 7/18
ABE7H08R10 7/11
ABE7H08R11 7/11
ABE7H08R21 7/11
ABE7H08S21 7/11
ABE7H12R10 7/11
ABE7H12R11 7/11
ABE7H12R20 7/11
ABE7H12R21 7/11
ABE7H12R50 7/11
ABE7H12S21 7/11
ABE7H16C10 7/10
ABE7H16C11 7/10
ABE7H16C21 7/10
ABE7H16C31 7/10
ABE7H16CM11 7/10
ABE7H16CM21 7/10
ABE7H16F43 7/11
ABE7H16R10 7/11
ABE7H16R11 7/11
ABE7H16R20 7/11
ABE7H16R21 7/11
ABE7H16R23 7/11
ABE7H16R30 7/11
ABE7H16R31 7/11
ABE7H16R50 7/11
ABE7H16S21 7/11
ABE7H16S43 7/11
ABE7H20E100 7/10
ABE7H20E200 7/10
ABE7H20E300 7/10
ABE7H32E150 7/10
ABE7H32E300 7/10
ABE7P08T330 7/14
ABE7P16F310 7/13
ABE7P16F312 7/13
ABE7P16T111 7/14
ABE7P16T210 7/14
ABE7P16T212 7/14
ABE7P16T214 7/14
ABE7P16T215 7/14
ABE7P16T230 7/14
ABE7P16T318 7/14
ABE7P16T330 7/14
ABE7P16T332 7/14
ABE7P16T334 7/14
ABE7R08S111 7/12
ABE7R08S210 7/12
ABE7R08S216 7/12
ABE7R16M111 7/13
ABE7R16S111 7/12
ABE7R16S111E 7/12
ABE7R16S210 7/12
ABE7R16S210E 7/12
ABE7R16S212 7/12
ABE7R16T111 7/13
ABE7R16T210 7/13
ABE7R16T212 7/13
ABE7R16T230 7/13
ABE7R16T231 7/13
ABE7R16T330 7/13
ABE7R16T332 7/13
ABE7R16T370 7/13
ABE7S16E2B1 7/12
ABE7S16E2B1E 7/12
ABE7S16E2E0 7/12
ABE7S16E2E1 7/12
ABE7S16E2F0 7/12
ABE7S16E2M0 7/12
ABE7S16E2M0E 7/12
ABE7S16S1B2 7/12
ABE7S16S1B2E 7/12
ABE7S16S2B0 7/12
ABE7S16S2B0E 7/12
ABE7TES160 7/18
ABFC08R02B 7/19
ABFC08R02R 7/19
ABFC08R02W 7/19
ABFC08R12B 7/19
ABFC08R12R 7/19
ABFC08R12W 7/19
ABFM04S200 7/17
ABFM04S201 7/17
ABFM08S201 7/17
ABFM16S201 7/17
ABFM32H150 7/17
ABFM32H151 7/17
ABFM32H300 7/17
ABFM32H301 7/17
ABL7RM24025 7/25
ABL7RP1205 7/27
ABL7RP4803 7/27
ABL8BBU24200 7/20
ABL8BUF24400 7/20
ABL8MEM05040 7/25
ABL8MEM12020 7/25
ABL8MEM24003 7/25
ABL8MEM24006 7/25
ABL8MEM24012 7/25
ABL8PRP24100 7/20
ABL8RED24400 7/20
ABL8REM24030 7/27
ABL8REM24050 7/27
ABR7S11 7/15
ABR7S21 7/15
ABR7S23 7/15
ABR7S33 7/15
ABR7S33E 7/15
ABR7S37 7/15
ABS7EA3E5 7/15
ABS7EA3F5 7/15
ABS7EA3M5 7/15
ABS7EC3AL 7/15
ABS7EC3B2 7/15
ABS7EC3E2 7/15
ABS7SA2M 7/15
ABS7SA3M 7/15
ABS7SC1B 7/15
ABS7SC2E 7/15
ABS7SC3BA 7/15
ABS7SC3E 7/15
AMSA85030 5/52
AMSA85032 5/52
AR1SB3 7/18
ASIABLB3002 7/29
ASIABLB3004 7/29
ASIABLD3002 7/29
ASIABLD3004 7/29
ASIABLM3024 7/29
ASMBII003 2/31
ASMBII004 2/31
ASMBKT085 5/53
ASMBKT185 5/53
ASMBPL001 5/53

B

BMXCRA31200 2/22
BMXCRA31210 2/22
BMXNRP0200 2/22
BMXNRP0201 2/22
BMXXBC008K 2/24
BMXXBC015K 2/24
BMXXBC030K 2/24
BMXXBC050K 2/24
BMXXBC120K 2/24
BMXXBE1000 2/24
BMXXBE2005 2/24

L

LAD90 7/25

M

MA0185100 2/32
MA0186100 2/32, 2/41
MA0329001 2/32
MEBTCPD 4/11
MEBTCPT 4/11

N

NWBM85C002 5/52
NWBM85D008 5/52
NWBM85Y422 4/11
NWBP85002 5/52
NWRR85001 5/52

R

RPXKIT6F 2/41
RPXKITCRP 2/41

S

STBEHC3020KC 3/27
STBNDP2212 5/55
STBXSP3000 3/23, 6/33, 6/39
STBXSP3010 3/23, 6/33, 6/39
STBXSP3020 3/23, 6/33, 6/39
SWMXDS001 5/52

T

TCSECN3M3M1S4 2/22, 5/39
TCSECN3M3M1S4U 2/22, 5/39
TCSEGPA23F14F 5/55
TCSEGPA23F14FK 5/55
TCSEGPA23F14FK 8/9
TCSESM083F23F1 2/22
TCSMCN3M4M3S2 1/13
TSXBATM02 1/15
TSXBATM03 1/15
TSXCBY010K 2/24
TSXCBY030K 2/24
TSXCBY050K 2/24
TSXCBY1000 2/24
TSXCBY120K 2/24
TSXCBY180K 2/24
TSXCBY280K 2/24
TSXCBYACC10 2/24
TSXCBYK9 2/24
TSXCDP053 3/15, 7/17
TSXCDP1003 3/15
TSXCDP103 3/15, 7/17
TSXCDP203 3/15, 7/17
TSXCDP303 3/15, 7/17
TSXCDP503 3/15, 7/17
TSXCUSB232 1/13, 6/23
TSXCUSBMBP 1/13, 6/23
TSXMCPC002M 1/15, 6/22
TSXMCPC512K 1/15, 6/22
TSXMFPP001M 1/15, 6/22
TSXMFPP002M 1/15, 6/22
TSXMFPP004M 1/15, 6/22
TSXMFPP512K 1/15, 6/22
TSXMRPC001M 1/15, 6/22
TSXMRPC001MC 8/4
TSXMRPC002M 1/15, 6/22
TSXMRPC003M 1/15, 6/22
TSXMRPC003MC 8/4
TSXMRPC007M 1/15, 6/22
TSXMRPC007MC 8/4
TSXMRPC01M7 1/15, 6/22
TSXMRPC768K 1/15, 6/22
TSXMRPF004M 1/15
TSXMRPF008M 1/15
TSXPBSCA100 5/55
TSXPBSCA400 5/55
TSXTLYEX 2/24

U

UNYSPUXFFCD70 6/43
UNYSPUXFGCD70 6/43
UNYSPUXFTCD70 6/43
UNYSPUXFUCD70 6/43
UNYSPUXZFCD70 6/43
UNYSPUXZGCD70 6/43
UNYSPUXZTCD70 6/43
UNYSPUXZUCD70 6/43
UNYXCAUSB033 1/13, 6/23

X

XZCB10201 5/43
XZCB10501 5/43
XZCB11001 5/43

PlantStruxure

www.schneider-electric.com/psx

Schneider Electric Industries SAS

Head Office
35, rue Joseph Monier
F-92500 Rueil-Malmaison
France

The information provided in this documentation contains general descriptions and/or technical characteristics of the performance of the products contained herein. This documentation is not intended as a substitute for and is not to be used for determining suitability or reliability of these products for specific user applications. It is the duty of any such user or integrator to perform the appropriate and complete risk analysis, evaluation and testing of the products with respect to the relevant specific application or use thereof. Neither Schneider Electric nor any of its affiliates or subsidiaries shall be responsible or liable for misuse of the information contained herein.

Design: Schneider Electric
Photos: Schneider Electric

MKTED2120701EN

November 2015 - V3.0

Schneider Electric

Modicon Quantum automation platform

2015