T5-25-48G-830-BYP

RAB

Project:	Type:	Prepared By:	Date:

UPC: 019813751313

Features and Benefits

Replacement for conventional fluorescent tubes

Integral Driver enables lamp to be wired directly to line voltage without need for an external driver or ballast

Double ended wiring method

50,000 hour Lifespan

Rated for use in enclosed and open fixtures in dry or damp locations

Diffused frosted lens will maintain the same light quality over time

Instant on full brightness

Environmentally friendly, no mercury used

NSF Listed: NSF/ANSI Standard 2 - Food Equipment - Splash Zone (Not for Direct Food Zone without additional fixture considerations)

UL Classified, DLC Listed

Emergency back up available. Catalog Numbers: DRI-5-EMGR-T8, DRI-10-EMGR-TYPE B

Compatible with RAB specified 0-10V dimming system

Technical Specifications

Performance

Product Type:
Linear

Input Wattage:
25W

Lumens:
3,300lm

Efficacy:
132lm/W

L70 Lifespan:
50,000 Hours

Wattage Equivalency:
54W Fluorescent

Construction

Material:
Glass

Shape:
T5

Nominal Length:
4 ft

Finish:
Frosted

For Use Outdoors in Open Fixtures:
No

LED Characteristics

Color Temperature:
3000K Warm White

Color Accuracy (CRI):
82 CRI

Beam Angle:
180°

Installation

Base Type:
G5

Electrical

THD:
<20%

Power Factor:
0.9

Operating Temperature:
-20°C to 45°C (-4°F to 113°F)

Dimming:
No

Input Voltage:
120-277V AC

Operating Frequency:
50/60Hz

Other

5-Year, No-Compromise Warranty:
RAB warrants that our LED products will be free from defects in materials and workmanship for a period of five (5) years from the date of delivery to the end user, including coverage of light output, color stability, driver performance and fixture finish. RAB's warranty is subject to all terms and conditions found at rablighting.com/warranty.

Copyright © 2026 RAB Lighting All Rights Reserved Note: Specifications are subject to change at any time without notice

Technical Specifications (continued)

Compliance

UL Recognized:
Yes

UL Classified:
Yes

NSF Listed:
Meets NSF/ANSI standards for use in Food Zone (non-contact), Splash, and Non-Food Zones. Tube guard required in open fixtures.

Certification Model Number:
T5-25-48G-830-BYP

California Energy Commission (CEC) Status:
Lawful for Sales in California

Application:
Suitable for damp locations and totally enclosed fixtures.

DLC Listed:
This product family is listed with the DesignLights Consortium (DLC). Individual SKUs within this family may carry either a DLC Standard or DLC Premium qualification. Please refer to the individual product specification sheet or the DLC Qualified Products List (QPL) at designlights.org to confirm the qualification status of a specific SKU prior to specification or purchase.

Case and Pallet Dimensions

	QTY	LENGTH (in)	WIDTH (in)	HEIGHT (in)
CASE	25	47.8	7.1	8
PALLET	750	49.2	39.4	49.6

Wiring Diagram

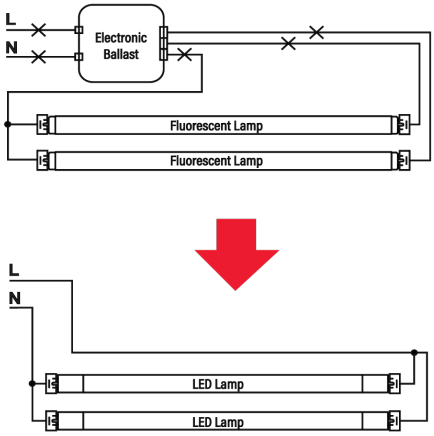

Copyright © 2026 RAB Lighting All Rights Reserved Note: Specifications are subject to change at any time without notice

Dimension

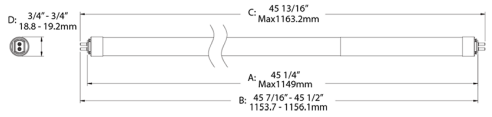

Copyright © 2026 RAB Lighting All Rights Reserved Note: Specifications are subject to change at any time without notice