PAR38-12.5-827-40D-DIM

UPC: 192552024419

Color: White

Weight: 0.6 lbs

Project:	Type:
Prepared By:	Date:

Technical Specifications

Performance

Product Type:
PAR, 80 CRI Dimmable

Description:
Replacements for halogen PAR lamps. Dimmable LED with 80 CRI and wet rated, great for use outdoors.

Wattage Equivalency:
100W Incandescent

Input Wattage:
13W

Lumens (Nominal):
1,100lm

Efficacy:
85lm/W

L70 Lifespan:
15,000-Hour LED lifespan based on IES LM-70 results

Electrical

Driver:
Constant Current 120V 50/60 Hz; 120V: 130mA

THD:
<50%

Power Factor:
0.7

Dimmable:
Yes, dimmable down to 10% on compatible TRIAC/ELV dimming systems. See Dimmer Compatibility List.

Input Voltage:
120V

Flicker:
<85%

Construction

Operating Temperature Range:
-4°F - 104°F (-20°C - 40°C)

Shape:
PAR38

Finish:
White

Endcap Material:
Nickel-plated aluminum

Enclosure Material:
Constructed from frosted, shatter-resistant polycarbonate

Lens Finish:
Frosted

LED Characteristics

Beam Angle:
40°

Color Temperature:
2700K

Color Accuracy (CRI):
≥80 CRI

R9 Value:
High color performance with R9 greater than 0

Color Consistency:
<7-step MacAdam Ellipse binning to achieve consistent fixture-to-fixture color

Installation

Base Type:
E26 Edison

Compliance

ETL Listed:
This product has been tested by Intertek and found in compliance with accepted national standards.

Copyright © 2026 RAB Lighting All Rights Reserved Note: Specifications are subject to change at any time without notice

Technical Specifications (continued)

Environment:
Suitable for use indoors and outdoors in dry, damp, or wet environments.

Fixture Rating:
Suitable for use in enclosed fixtures

Energy Star Approved:
No

DLC Listed:
No

California Title 24 JA8 Compliant:
No

California Energy Commission (CEC) Status:
Not Lawful for Sales in California

NEC Compliant:
No

IESNA LM-79 & LM-80 Testing:
RAB LED luminaires and LED components have been tested by an independent laboratory in accordance with IESNA LM-79 and LM-80.

RoHS:
Mercury and UV free. RoHS-compliant components.

FCC:
Complies with Part 15 of the FCC Rules

Other

3-Year, No-Compromise Warranty:
RAB warrants that our LED products will be free from defects in materials and workmanship for a period of three (3) years from the date of delivery to the end user, including coverage of light output, color stability, driver performance and fixture finish. RAB's warranty is subject to all terms and conditions found at rablighting.com/warranty.

Copyright © 2026 RAB Lighting All Rights Reserved Note: Specifications are subject to change at any time without notice

PAR38-12.5-827-40D-DIM

Case and Pallet Dimensions

	QTY	LENGTH (in)	WIDTH (in)	HEIGHT (in)
CASE	6	15.354	10.354	6
PALLET	480	46.063	36.063	49.449

Dimension

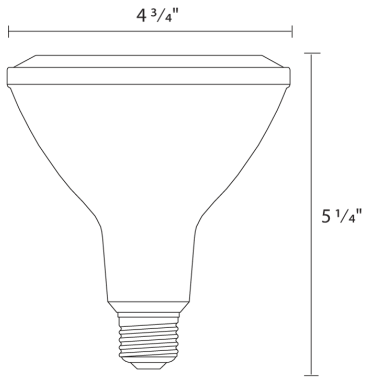

Features

- Energy efficient replacement for incandescent and halogen PAR lamps
- Constructed from durable materials which lowers risk of breakage
- Rated for use in enclosed and open fixtures in wet locations
- Single optic and full face lens for precise beam angle control

Ordering Matrix

Family	Wattage	CRI/Color Temp	Beam Angle	Dimmable
PAR38	12.5	827	40D	DIM
	12.5 = 12.5W	**827** = 80 CRI, 2700K **830** = 80 CRI, 3000K **840** = 80 CRI, 4000K	**40D** = 40°	**DIM** = 120V, TRIAC/ELV

Copyright © 2026 RAB Lighting All Rights Reserved Note: Specifications are subject to change at any time without notice