H17

RAB

Project:	Type:
Prepared By:	Date:

Driver Info

Type	Constant Current
120V	1.40A/1.20A/1.00A
208V	0.80A/0.70A/0.60A
240V	0.70A/0.60A/0.50A
277V	0.60A/0.50A/0.40A
Input Watts	101-149.1W

LED Info

Watts	150W
Color Temp	3000/4000/5000K
Color Accuracy	83-86 CRI
L70 Lifespan	100,000 Hours
Lumens	15,317-22,224 lm
Efficacy	140.1-168.8 lm/W

Technical Specifications

Field Adjustability

Field Adjustable:
Field Adjustable Light Output:
150W/120W/100W (factory default 150W)
Color temperature selectable by 3000K, 4000K and 5000K (factory default 4000K)

Compliance

UL Listed:
Suitable for wet locations

IESNA LM-79 & LM-80 Testing:
RAB LED luminaires and LED components have been tested by an independent laboratory in accordance with IESNA LM-79 and LM-80.

IP Rating:
Ingress protection rating of IP65 for dust and water

Certification Model Number:
H17-002

DLC Listed:
This product family is listed with the DesignLights Consortium (DLC). Individual SKUs within this family may carry either a DLC Standard or DLC Premium qualification. Please refer to the individual product specification sheet or the DLC Qualified Products List (QPL) at designlights.org to confirm the qualification status of a specific SKU prior to specification or purchase.

Electrical

Driver:
100W: Constant Current, 120-277V, 50/60Hz,120V: 0.86A, 208V: 0.50A, 240V: 0.43A, 277V: 0.37A
120W: Constant Current, 120-277V, 50/60Hz,120V: 1.03A, 208V: 0.59A, 240V: 0.51A, 277V: 0.44A
150W: Constant Current, 120-277V, 50/60Hz,120V: 1.24A, 208V: 0.72A, 240V: 0.62A, 277V: 0.54A

Dimming Driver:
Driver includes wiring for 0-10V dimming systems. Dim as low as 10%.

THD:
3.25% at 120V, 5.6% at 277V

Power Factor:
99.71% at 120V, 93.05% at 277V

Surge Protection:
L-N: 4 kV
L/N-PE: 6 kV

LED Characteristics

LEDs:
Long-life, high-efficacy, surface-mount LEDs

Color Consistency:
7-step MacAdam Ellipse binning to achieve consistent fixture-to-fixture color

Color Uniformity:
RAB's range of Correlated Color Temperature follows the guidelines of the American National Standard for Specifications for the Chromaticity of Solid State Lighting (SSL) Products, ANSI C78.377-2017.

Construction

Cold Weather Starting:
The minimum starting temperature is -40°F (-40°C)

Maximum Ambient Temperature:
Max Power Temp Rating: 122°F (50°C)
Middle Power Temp Rating: 57°C (135°F)
Low Power Temp Rating: 63°C (145°F)

Housing:
Precision die-cast aluminum

Copyright © 2026 RAB Lighting All Rights Reserved Note: Specifications are subject to change at any time without notice

Technical Specifications (continued)

Lens:
Polycarbonate lens

Reflector:
Polycarbonate and Aluminum (Reflector Accessories Sold Separately)

Finish:
Formulated for high durability and long-lasting color

Green Technology:
Mercury and UV free. RoHS-compliant components.

Installation

Mounting:
Comes standard with a hanging hook and 6-foot cord for hook mounting only. **Pendant mounting requires the H17-PM KIT accessory (sold separately) — the fixture cannot be pendant mounted without it.** The H17-PM KIT connects the fixture to a 3/4" NPT pendant mount (pendant by others).

Other

Compatible Products:
H17 Field-Adjustable High Bay Accessories

5-Year Limited Warranty:
The RAB 5-year, limited warranty covers light output, driver performance and paint finish. RAB's warranty is subject to all terms and conditions found at rablighting.com/warranty.

Performance

Wattage Equivalency:
Equivalent to 400W Metal Halide

Dimensions

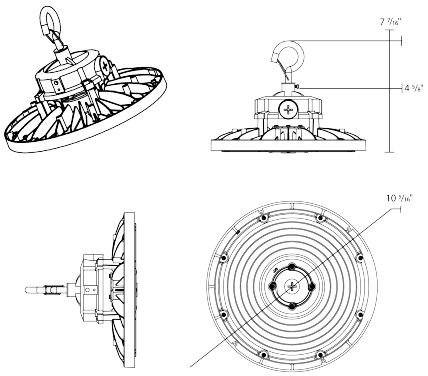

Features

- DLC Premium listed
- 100,000-hour LED Life
- 0-10V dimming standard
- 5-Year, limited warranty

Copyright © 2026 RAB Lighting All Rights Reserved Note: Specifications are subject to change at any time without notice

Ordering Matrix

Family	Wattage	Mounting	Color Temp	Finish	Driver	Options
H17						
	S = 100/80/60W **Blank =** 150/120/100W **XL =** 240/200/150W **XXL =** 500/400/300W	**Blank =** Hook	**Blank =** 3000/4000/5000K CCT Adjustable	**Blank =** White **B =** Black	**Blank =** 120-277V, 0-10V Dimming **/480 =** 480V, 0-10V Dimming	**Blank =** No Option **/6CP =** 6' Cord & 120V Plug **/6CP2 =** 6' Cord & 277V Plug **/6CPT4 =** 6' Cord & 480V Plug **/LCBS =** Lightcloud Blue w/PIR Sensor

Copyright © 2026 RAB Lighting All Rights Reserved Note: Specifications are subject to change at any time without notice