BOAS-T

Color: White

Weight: 0.0 lbs

Project:	Type:
Prepared By:	Date:

Technical Specifications

Product Overview

Product Type:
Architectural Linear Light, SmartShift Ready

Performance

Description:
Extenders and mounting accessories for the BOA SmartShift Linear Light.

Electrical

Operating Temperature:
-4°F to 104°F (-20 to 40°C)

Emergency Operation:
Not for use as emergency lighting.

Installation

Mounting:
Suspended

Construction

Shape:
T

Finish:
White

Endcap Material:
Polycarbonate and aluminum

Enclosure Material:
Aluminum

Lens Finish:
Frosted

Lens:
Flat

Compliance

Environment:
Suitable for use indoors in dry and damp environments.

IC Rated:
No

Air Tight:
No

Energy Star Approved:
No

DLC Listed:
This product family is listed with the DesignLights Consortium (DLC). Individual SKUs within this family may carry either a DLC Standard or DLC Premium qualification. Please refer to the individual product specification sheet or the DLC Qualified Products List (QPL) at designlights.org to confirm the qualification status of a specific SKU prior to specification or purchase.

Certification Model Number:
BOAS-T

California Title 20 Compliant:
No

California Title 24 JA8 Compliant:
No

California Energy Commission (CEC) Status:
Lawful for Sales in California

IESNA LM-79 & LM-80 Testing:
RAB LED luminaires and LED components have been tested by an independent laboratory in accordance with IESNA LM-79 and LM-80.

RoHS:
Mercury and UV free. RoHS-compliant components.

Copyright © 2026 RAB Lighting All Rights Reserved Note: Specifications are subject to change at any time without notice

Technical Specifications (continued)

FCC:
Complies with Part 15 of the FCC Rules

Other

5-Year Limited Warranty:
The RAB 5-year, limited warranty covers light output, driver performance and paint finish. RAB's warranty is subject to all terms and conditions found at rablighting.com/warranty.

Dimensions

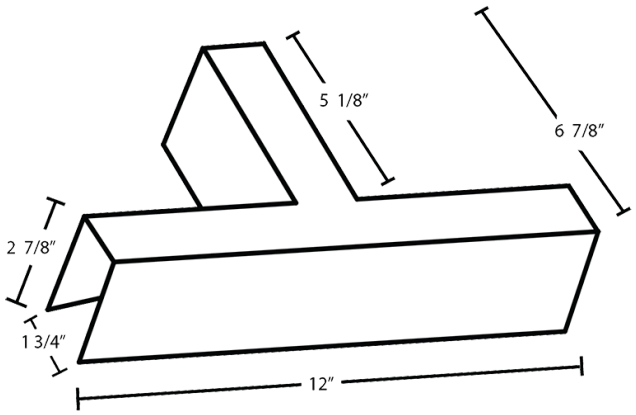

Features

- Available in 2', 3', 4', 8' with up/down light
- Suspended mount with optional flat or louver lens
- Wireless communication via Bluetooth Mesh with Lightcloud Blue
- SmartShift Ready for circadian and aesthetic lighting profiles
- 5-Year, No-Compromise Warranty

Copyright © 2026 RAB Lighting All Rights Reserved Note: Specifications are subject to change at any time without notice