BOAS2LS/LCBS

RAB

Color: Silver

Weight: 3.5 lbs

Project:	Type:
Prepared By:	Date:

Driver Info

Type	Constant Current
120V	0.17A
208V	0.11A
240V	0.09A
277V	0.08A
Input Watts	20.3-20.4W

LED Info

Watts	20W
Color Temp	2700-6500K
Color Accuracy	N/A
L70 Lifespan	100,000 Hours
Lumens	2231-2586 lm
Efficacy	109.9-126.8 lm/W

Technical Specifications

Lightcloud

Lightcloud Blue:
Lightcloud Blue is a Bluetooth® Mesh lighting control system designed for fast setup and flexibility. Install quickly with no gateways, hubs, or additional control wiring. Start with a single device and easily scale to control entire buildings.
Learn more at rablighting.com/lcb.

DLC system - N1XMLOEATBA (Interior); NHCZ2BIA17L (Exterior)

Gateway Required:
No

Communication Protocol:
Bluetooth Mesh

SmartShift:
SmartShift Ready to easily configure automated lighting profiles to automatically adjust brightness and color temperature for circadian and aesthetic needs.

Light Shows:
No, this product is not compatible with dynamic color changing Light Shows. Contact RAB for more information.

Range:
Indoor: Up to 60 feet between standard building materials. Building materials such as brick, concrete, and steel construction may require additional Lightcloud Blue devices to extend around an obstruction; Up to 200 feet clear line of sight.

Outdoor: Up to 60 feet clear line of sight; Up to 18 feet around corners

Spacing Criteria:
Lightcloud Blue devices should be placed within the specified range to communicate within the Bluetooth Mesh network. Building materials such as brick, concrete, and steel construction or heavy vegetation, bushes or trees may require additional Lightcloud Blue devices to extend around an obstruction.

Sensor Settings

Remote Control Accessory:
Yes, with additional devices, sold separately. Small projects use Nano to link with Amazon Alexa or Google Home for wireless control using those apps. Larger projects require one XDIM Bridge per Area plus a Gateway for full remote access via Lightcloud web portal or mobile app.

Sensor Connection Type:
Intergrated

Max Mounting Height:
8 to 12 feet

Detection Range:
20 ft diameter at 9 ft mounting height

Sensor Technology:
Passive Infrared (PIR)

Default Setting:
Default:
Motion Sensitivity: High
Brightness when triggered : 100%
Hold time: 20 minutes
Standby to dim: 20%
Standby time: 1 minute
When vacant: Off
Once paired to Lightcloud Blue, the sensor will be disabled. Sensor settings can be adjusted using the mobile app.

Adjustable Sensor Settings?:
Yes, using the Lightcloud Blue mobile app

Sensing Type:
Sensors can be configured for Occupancy, Vacancy, Daylight Harvesting and Photocell.

Daylight Harvesting:
Continuous: Dim levels will continuously adjust based on the Target Light Level set in the Lightcloud Blue mobile app.

Photocell:
Yes, configurable using Lightcloud Blue mobile app

Copyright © 2026 RAB Lighting All Rights Reserved Note: Specifications are subject to change at any time without notice

Technical Specifications (continued)

Product Overview

Product Type:
Architectural Linear Light, SmartShift Ready

Performance

Description:
Modern linear lighting with indirect distribution and tunable white color temperature. Easily create circadian or aesthetic lighting profiles with preset schedules that automatically adjust light levels and color temperature throughout the day, with flexible configurations, colors, and lengths.

Wattage Equivalency:
(1) F32T8; (3) F17T8

Input Wattage:
20W

Lumens:
2,400lm

Efficacy:
120lm/W

L70 Lifespan:
100,000-Hour LED lifespan based on IES LM-70 results

Electrical

Driver:
Constant Current, Class 2 120-277 50/60; 120V: 170mA; 208V: 100mA; 240V: 90mA; 277V: 80mA

THD:
<25%

Power Factor:
>0.87

Dimmable:
Yes, up & down light is dimmable down to 5% with Lightcloud Blue mobile app and devices.
This product will not operate properly when connected to a standard TRIAC/ELV or 0-10V dimmer or dimming control.

Operating Temperature:
-4°F to 104°F (-20 to 40°C)

Flicker:
<30%

Emergency Operation:
Not for use as emergency lighting.

LED Characteristics

Beam Angle:
110°±5°

Light Distribution:
Up, Down or Up/Down
Selectable via the Lightcloud Blue mobile app.

Color Temperature:
Default: 4000K
Adjustable using the Lightcloud Blue mobile app
Tunable White 2700K - 6500K

Color Tuning:
No

Color Accuracy (CRI):
>90 CRI

Natural Spectrum:
No

R9 Value:
High color performance with R9 greater than 50

Color Consistency:
<5-step MacAdam Ellipse binning to achieve consistent fixture-to-fixture color

Installation

Mounting:
Suspended pendant

Continuous Run:
No, for continuous runs consider the BOA Field-Adjustable Linear models with Lightcloud Blue.

Construction

Length:
2 ft

Shape:
Linear

Finish:
Silver

Endcap Material:
Polycarbonate and aluminum

Enclosure Material:
Aluminum

Lens Finish:
Frosted

Lens:
Louver

Compliance

Listings:
UL Listed, UL Classified

Environment:
Suitable for use indoors in dry and damp environments.

IC Rated:
No

Air Tight:
No

Energy Star Approved:
No

DLC Listed:
This product family is listed with the DesignLights Consortium (DLC). Individual SKUs within this family may carry either a DLC Standard or DLC Premium qualification. Please refer to the individual product specification sheet or the DLC Qualified Products List (QPL) at designlights.org to confirm the qualification status of a specific SKU prior to specification or purchase.

DLC NLC Listed:
This system is on the Design Lights Consortium (DLC) Network Lighting Controls (NLC) Qualified Products List and is eligible for rebates from DLC Member Utilities.
DLC system - N1XMLOEATBA (Interior); NHCZ2BIA17L (Exterior)

Certification Model Number:
BOAS2LS/LCBS

California Title 20 Compliant:
No

California Title 24 JA8 Compliant:
No

California Energy Commission (CEC) Status:
Lawful for Sales in California

IESNA LM-79 & LM-80 Testing:
RAB LED luminaires and LED components have been tested by an independent laboratory in accordance with IESNA LM-79 and LM-80.

Copyright © 2026 RAB Lighting All Rights Reserved Note: Specifications are subject to change at any time without notice

Technical Specifications (continued)

RoHS:
Mercury and UV free. RoHS-compliant components.

FCC:
Complies with Part 15 of the FCC Rules

Other

Compatible Products:
Compatible with other Lightcloud Blue products. to expand system features.

Compatible Accessories:
BOAS-WM
Wall Mount Kit

5-Year Limited Warranty:
The RAB 5-year, limited warranty covers light output, driver performance and paint finish. RAB's warranty is subject to all terms and conditions found at rablighting.com/warranty.

Dimensions

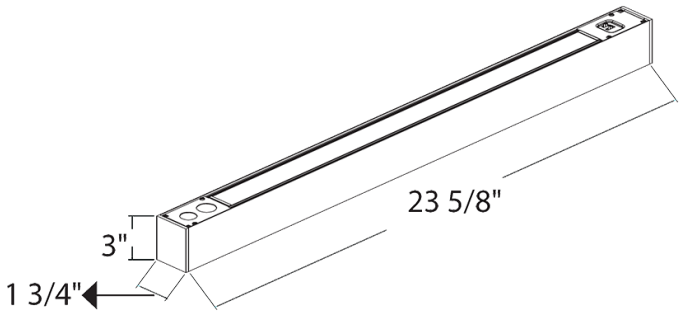

Features

- Available in 2', 3', 4', 8' with up/down light
- Suspended mount with optional flat or louver lens
- Wireless communication via Bluetooth Mesh with Lightcloud Blue
- SmartShift Ready for circadian and aesthetic lighting profiles
- 5-Year, No-Compromise Warranty

Ordering Matrix

Family	Size/Wattage	Mount	Lens	Color Temp	Light Output	Driver	Finish	Controls	Battery Backup
BOAS	2		L				S	/LCBS	
	2 = 2 ft, 20W **3 =** 3 ft, 30W **4 =** 4 ft, 40W **8 =** 8 ft, 80W	**Blank =** Pendant Mount	**Blank =** Flat **L =** Louvers	**Blank =** 2700-6500K Tunable White	**Blank =** Up/Down	**Blank =** 120-277V	**B =** Black **S =** Silver **W =** White	**/LCBS =** Lightcloud Blue w/PIR Sensor **/LCBS/MVS =** Lightcloud Blue w/MVS Sensor	**Blank =** None **/E =** Battery Backup

Copyright © 2026 RAB Lighting All Rights Reserved Note: Specifications are subject to change at any time without notice