EMHB30/LCB

Color: White

Weight: 3.7 lbs

Project:	Type:
Prepared By:	Date:

Technical Specifications

Lightcloud

Lightcloud Blue:
Lightcloud Blue is a Bluetooth Mesh wireless lighting control system that allows you to control RAB's various compatible devices. With RAB's patented Rapid Provisioning technology, devices can be quickly and easily commissioned for residential and large commercial applications using the Lightcloud Blue mobile app. Each device in a system can communicate with any other device, eliminating the need for a Gateway or Hub and maximizing the control system's reach.

DLC system - Interior: N1XMLOEATBA; Exterior: NHCZ2BIA17L

Learn more at www.lightcloud.com.

Gateway Required:
No

Communication Protocol:
Bluetooth Mesh

Range:
Indoor: Up to 60 feet between standard building materials. Building materials such as brick, concrete, and steel construction may require additional Lightcloud Blue devices to extend around an obstruction; Up to 200 feet clear line of sight.

Outdoor: Up to 60 feet clear line of sight; Up to 18 feet around corners

Spacing Criteria:
Lightcloud Blue devices should be placed within the specified range to communicate within the Bluetooth Mesh network.

Factory Reset:
Method 1: Delete from App
Open the app and access the device settings for the paired device. Be sure that the device is online and select 'Delete from Site'. The indicator light will flash 3 times and reset to factory settings.

Method 2: Manual
Press the test button off and on 5+ times consecutively in 5 seconds. The indicator light will flash 3 times and reset to factory settings.

Method 3: EMHB Remote (sold separately)
Using the EMHB Remote point it at the emergency driver and press reset button for 10 seconds. The indicator light will flash 3 times and reset to factory settings.

Emergency Self-Test:
Monthly: This device will automatically perform a monthly self-test every 30-days with a duration of 30 seconds to confirm normal emergency function. Device will automatically return to normal charging after 30 second discharge.

Annual: An annual self-test will be done every year (12 months) with a duration of more than 90 minutes to confirm the capacity of the battery and will automatically restore to normal charging after the battery has been fully discharged.

Performance

Product Type:
Emergency Driver

Description:
Emergency battery backup with wireless control.

Input Wattage:
12W Max

Electrical

Power Factor:
0.6 @ 100VAC;
0.5 @ 347VAC

Input Voltage:
100-347V

Copyright © 2025 RAB Lighting All Rights Reserved Note: Specifications are subject to change at any time without notice

Technical Specifications (continued)

Operating Frequency:
50/60Hz

Input Current @ 120V (mA):
150mA

Operating Temperature:
32°F to 122°F (0°C to 50°C)

Battery Type:
Lithium Ion

Emergency Output Power Max:
30W

Emergency Output Voltage:
120-200VDC

Emergency Operation:
90 minutes

Battery Recharge Time:
24 hours

Installation

Mounting:
Hook

Construction

Finish:
White

Enclosure Material:
Metal

Compliance

Listings:
UL Listed, American NFPA 101 Life Safety Code

IP Rating:
IP69K, IP65

Certification Model Number:
EMHB30/LCB

California Title 20 Compliant:
Can be used to conform with the requirements of California Title 20

California Title 24 JA8 Compliant:
No

California Energy Commission (CEC) Status:
Lawful for Sales in California

NSF Listed:
No

RoHS:
Mercury and UV free. RoHS-compliant components.

FCC:
Complies with Part 15 of the FCC Rules

DLC NLC Listed:
This product is on the Design Lights Consortium (DLC) Network Lighting Controls (NLC) Qualified Products List and is eligible for rebates from DLC Member Utilities.
DLC system - N1XMLOEATBA (Interior); NHCZ2BIA17L (Exterior)

Other

Compatible Products:
H17[XL][XXL]][B]
H17 High bay
30-240W LED lamp with 0-10V dimming or LED lamp less than 30W without 0-10V dimming

5 Yr Limited Warranty:
The RAB 5-year, limited warranty covers light output, driver performance and paint finish. RAB's warranty is subject to all terms and conditions found at rablighting.com/warranty.

Buy American Act Compliance:
RAB values USA manufacturing! Upon request, RAB may be able to manufacture this product to be compliant with the Buy American Act (BAA). Please contact customer service to request a quote for the product to be made BAA compliant.

Copyright © 2025 RAB Lighting All Rights Reserved Note: Specifications are subject to change at any time without notice

Dimensions

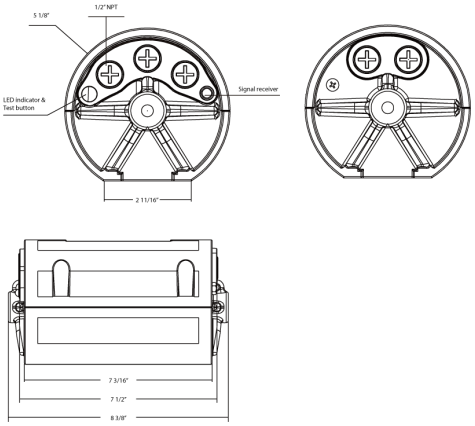

Features

- Easy installation, no need to open up a luminaire to connect device to the driver
- Built-in junction box
- Battery over-charge/discharge protection
- Output overload, short-circuit, and open load protection

Copyright © 2025 RAB Lighting All Rights Reserved Note: Specifications are subject to change at any time without notice