CLN8406AC
Carolina Outdoor Lantern
Aged Copper

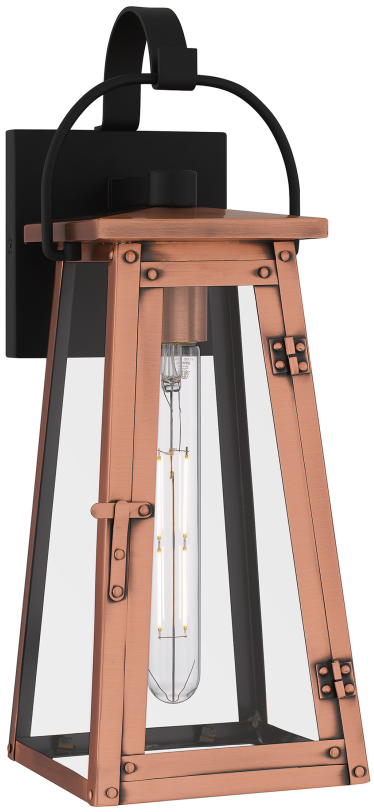

DETAILS

Material: COPPER-STEEL

Glass/Shade Description: Clear Glass

LAMPING

Light Source: Both

Bulb Included: No

Bulb Type: Medium Base

Bulb Quantity: 1

Watts per Bulb: 100

ELECTRICAL

Dimmable: Yes

Voltage: 120v

Wire Length: 0.5'

DIMENSIONS

Dimensions: 6.00" W x 16.50" H x 7.25" D

Backplate Dimensions: 4.50"H x 4.50"W

HCWO: 5"

Weight: 5.13 lbs

INSTALLATION

Location Rating: Wet

Install Position: Down

We reserve the right to revise the design of components of any product due to parts availability or change in our Listed Mark standards without assuming any obligation or liability to modify any products previously manufactured and without notice. This literature depicts a product DESIGN that is the SOLE and EXCLUSIVE PROPERTY of Quoizel Inc. Compliance with U.S. COPYRIGHT and PATENT requirements, notification is hereby presented in this form that this literature, or this product depicts, is NOT to be copied, altered or used in any manner without the express written consent of, or contray to the best interests of Quoizel Inc. 03/31/2013

Quoizel Inc. All Rights Reserved