nVent | CADDY

We connect and protect

nVent CADDY Wire Basket Tray

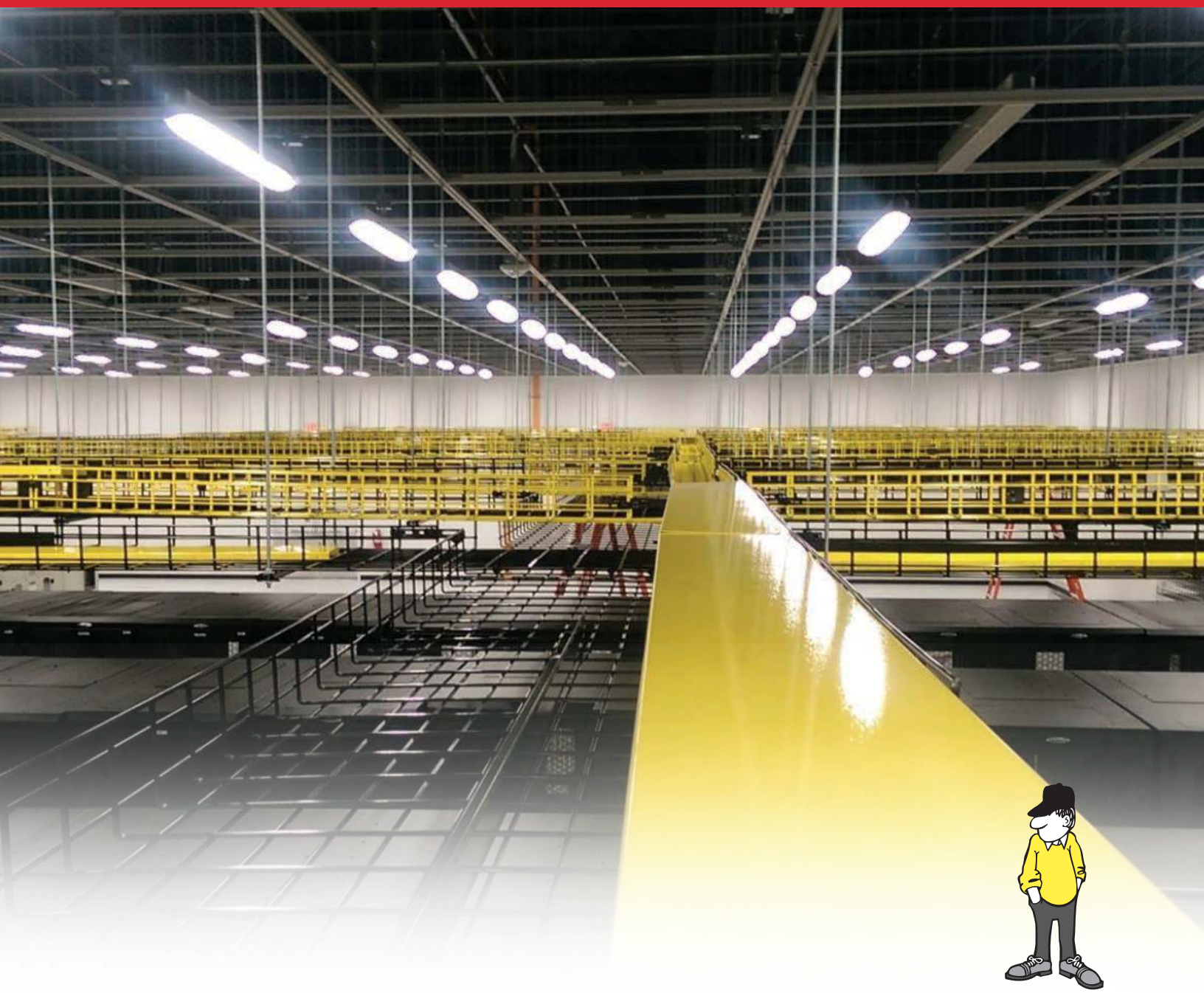

nVent.com/CADDY

The nVent CADDY Wire Basket Tray System is an industry leading continuous pathway support solution for today's high-performance cabling systems.

Optimizing Space with Design Flexibility

Our innovative "shaped tray," form liners, supports, hardware and accessories prioritize vertical space utilization without compromising design flexibility.

Time and Cost Efficient Solutions

Improve productivity and reduce risk with less time spent on elevated surfaces and unskilled tasks.

Safety and Reliability

Our highly engineered features facilitate industry-standard compliant installations, enhancing safety and enabling easy maintenance.

Table of Contents

nVent CADDY Wire Basket Tray System 6

nVent CADDY Wire Basket Tray Applications 8

nVent CADDY Wire Basket Tray 10

nVent CADDY Wire Basket Tray, Shaped Wire 10

nVent CADDY Wire Basket Tray, Round Wire 13

nVent CADDY Wire Basket Tray Supports 16

nVent CADDY Wire Basket Tray C Bracket 16

nVent CADDY Wire Basket Tray L Bracket 17

nVent CADDY Wire Basket Tray Center Support 17

nVent CADDY Wire Basket Tray Ceiling Support 18

nVent CADDY Wire Basket Tray Independent Underfloor Support 19

nVent CADDY Wire Basket Tray Termination Support 19

nVent CADDY Wire Basket Tray Hardware 20

nVent CADDY Wire Basket Tray Bar Splice 20

nVent CADDY Wire Basket Tray Double Splice 20

nVent CADDY Wire Basket Tray Corner Splice 21

nVent CADDY Wire Basket Tray Radius Corner Splice 21

nVent CADDY Wire Basket Tray Splice Kit 22

nVent CADDY Wire Basket Tray Washer Support 22

nVent CADDY Wire Basket Tray Ground Bolt 23

nVent CADDY Wire Basket Tray Tool-Free Splice 23

nVent CADDY Wire Basket Tray Transitions 24

nVent CADDY Wire Basket Tray PreForm Intersection 24

nVent CADDY Wire Basket Tray PreForm Elbow 90° 25

nVent CADDY Wire Basket Tray PreForm Tee 26

nVent CADDY Wire Basket Tray Accessories 27

nVent CADDY Wire Basket Tray Blind End 27

nVent CADDY Wire Basket Tray Polymer Insert 28

nVent CADDY Wire Basket Tray Polymer Insert, Perforated 29

nVent CADDY Wire Basket Tray Vertical Down 29

nVent CADDY Wire Basket Tray Drop Out 30

nVent CADDY Wire Basket Tray Label Clip 30

nVent CADDY Wire Basket Tray Side Car 31

nVent CADDY Wire Basket Tray Vertical Up 31

nVent CADDY Wire Basket Tray Cutting Tool 31

nVent CADDY Wire Basket Tray Divider Post 32

nVent CADDY Wire Basket Tray Box Support 32

nVent CADDY Wire Basket Tray Conduit Support 33

nVent CADDY Wire Basket Tray Waterfall 33

nVent CADDY Wire Basket Tray Waterfall, Vertical 34

What is nVent CADDY Wire Basket Tray?

Today's data centers and on-location datacom solutions are critical to business' operations.

nVent CADDY Wire Basket Tray meets and exceeds the demands for the most complex data centers and small businesses alike.

nVent CADDY Wire Basket Tray is a continuous pathway solution to support high-performance cabling systems while providing an ideal foundation for datacom and electrical contractors. Combined with an offering that includes cable tray supports, hardware, transitions and accessories—a full-system solution is created. As your trusted ally, we here at nVent CADDY are committed to designing products that deliver superior fastening solutions for your challenges. No matter how large or small your project, we want to keep you Working Smarter both on and off the job site.

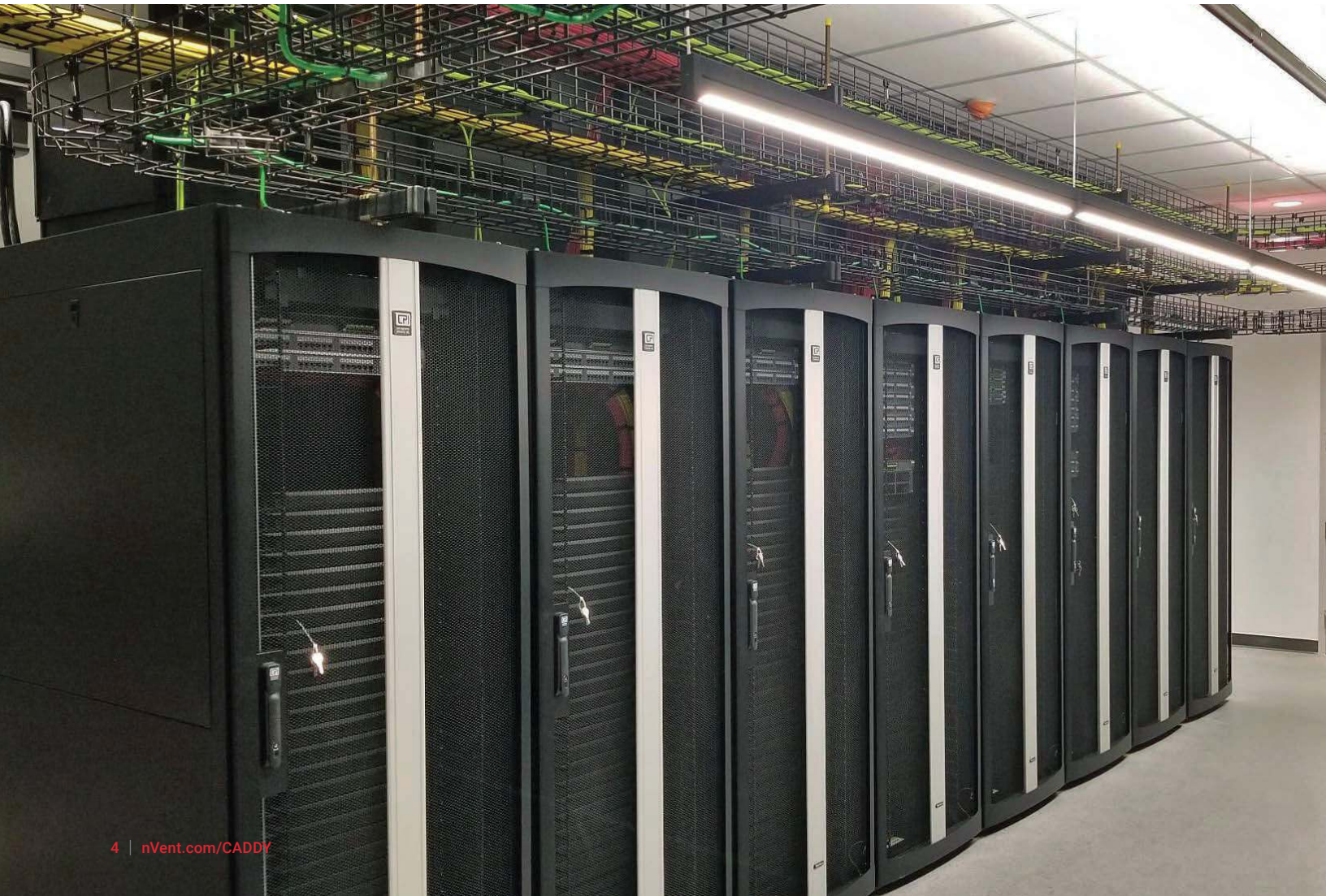

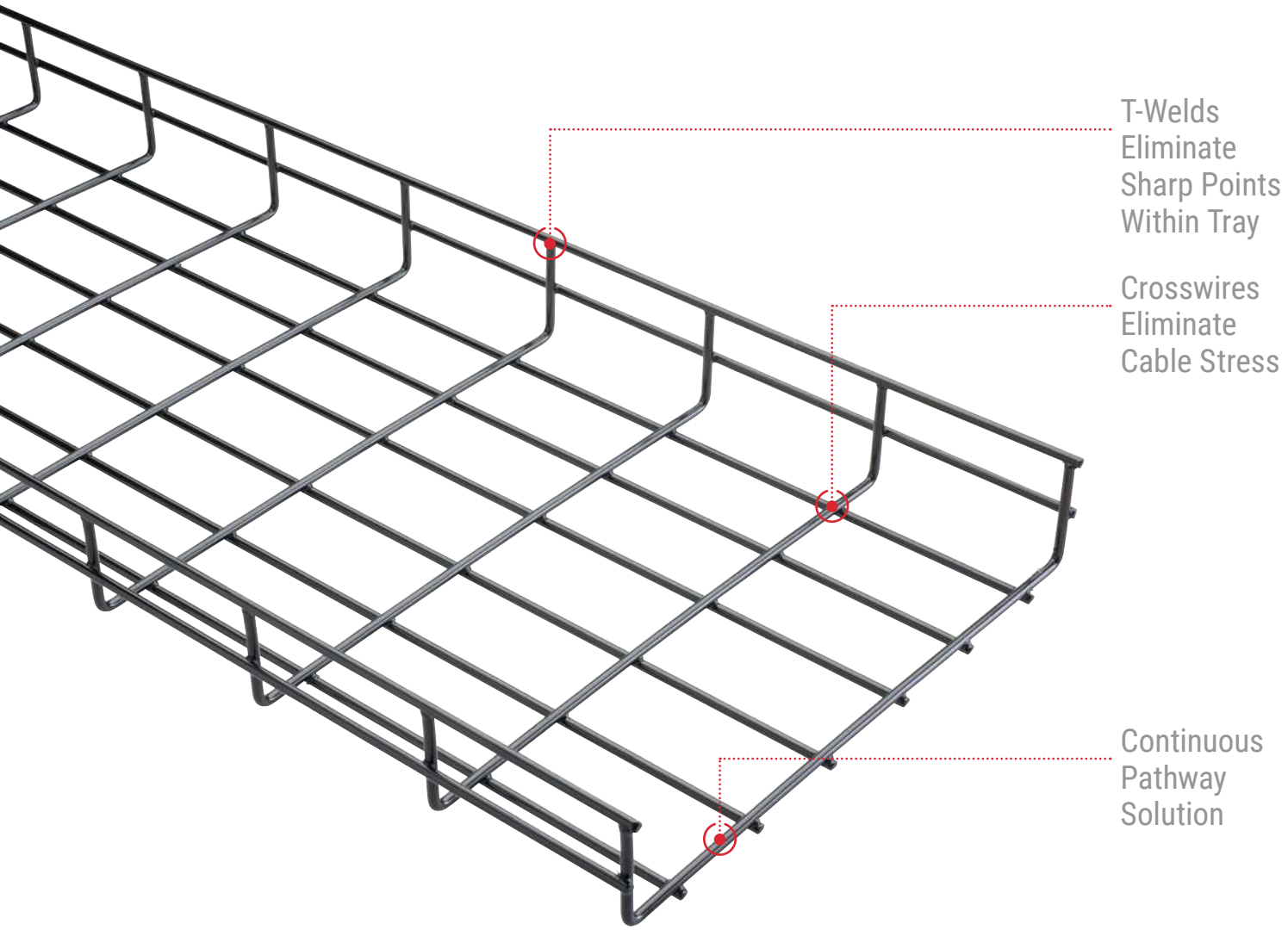

nVent CADDY Wire Basket Tray is a continuous pathway solution to support high-performance cabling systems while providing an ideal foundation for datacom and electrical contractors.

Compared to traditional round tray technology, shaped tray wires are specially designed to reduce cable strain while maximizing installation flexibility, resulting in a system that can be installed on longer runs with more complex shape configurations. Wire Basket Tray provides the ideal foundation required by today' s datacom and electrical contractors.

Shaped Tray:

- 400% increase in cabling support—designed to protect mission critical infrastructure
- 5 mm rod construction for higher load rating
- Up to 65% reduction in cabling pressure/strain to meet relevant cabling standards
- No sharp edges during construction ensures cable and installer protection
- Cuts, configures and splices to meet custom project requirements
- No training requirements for the installer

Shaped Tray
High-Strength Advantage

nVent CADDY offers shaped crosswires that eliminate cable stress by increasing the support of the cabling yet still provides the same functionality of wire tray to cut and configure and utilizes the same splicing and mounting hardware. nVent CADDY also offers full round wire configuration, if preferred, or for industrial or electrical applications.

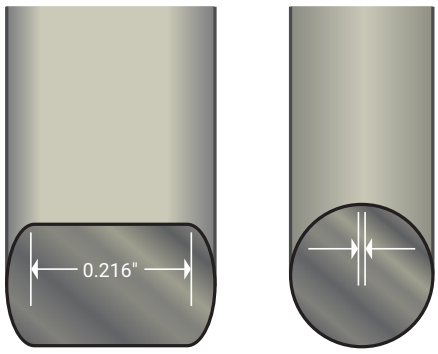

nVent CADDY Wire Basket Tray System

Commercial Building Structures

nVent CADDY Wire Basket Tray offers a wide range of solutions to support large-scale commercial buildings to industrial warehouses and more. With high loading capabilities and custom tray configurations, we keep you Working Smarter even in the most unique environments.

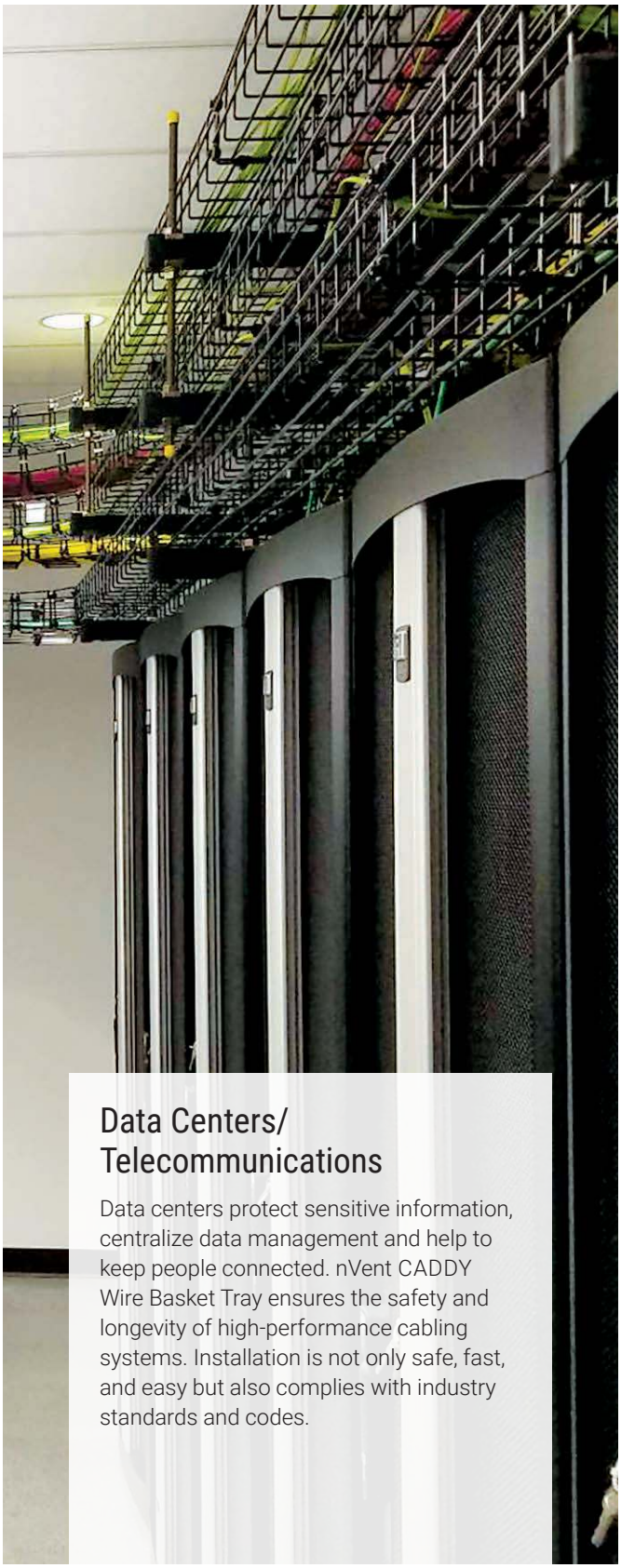

Data Centers/ Telecommunications

Data centers protect sensitive information, centralize data management and help to keep people connected. nVent CADDY Wire Basket Tray ensures the safety and longevity of high-performance cabling systems. Installation is not only safe, fast, and easy but also complies with industry standards and codes.

Industrial/Electrical

nVent CADDY Wire Basket Tray delivers a complete, high-capacity cable tray offering designed to perform reliably in demanding industrial building applications, supporting heavier cable loads and a wide range of installation environments. This cable tray solution provides durability and flexibility and creates a readily available system for electrical and industrial facilities.

Marine/Offshore

When running critical cabling systems offshore, you need to be confident that cabling will remain secure and intact. With nVent CADDY Wire Basket Tray, installers can trust the entire system to deliver high-performance cables to their outputs safely. Additionally, the stainless steel hardware will not corrode even in the harshest marine environments.

nVent CADDY Wire Basket Tray Applications

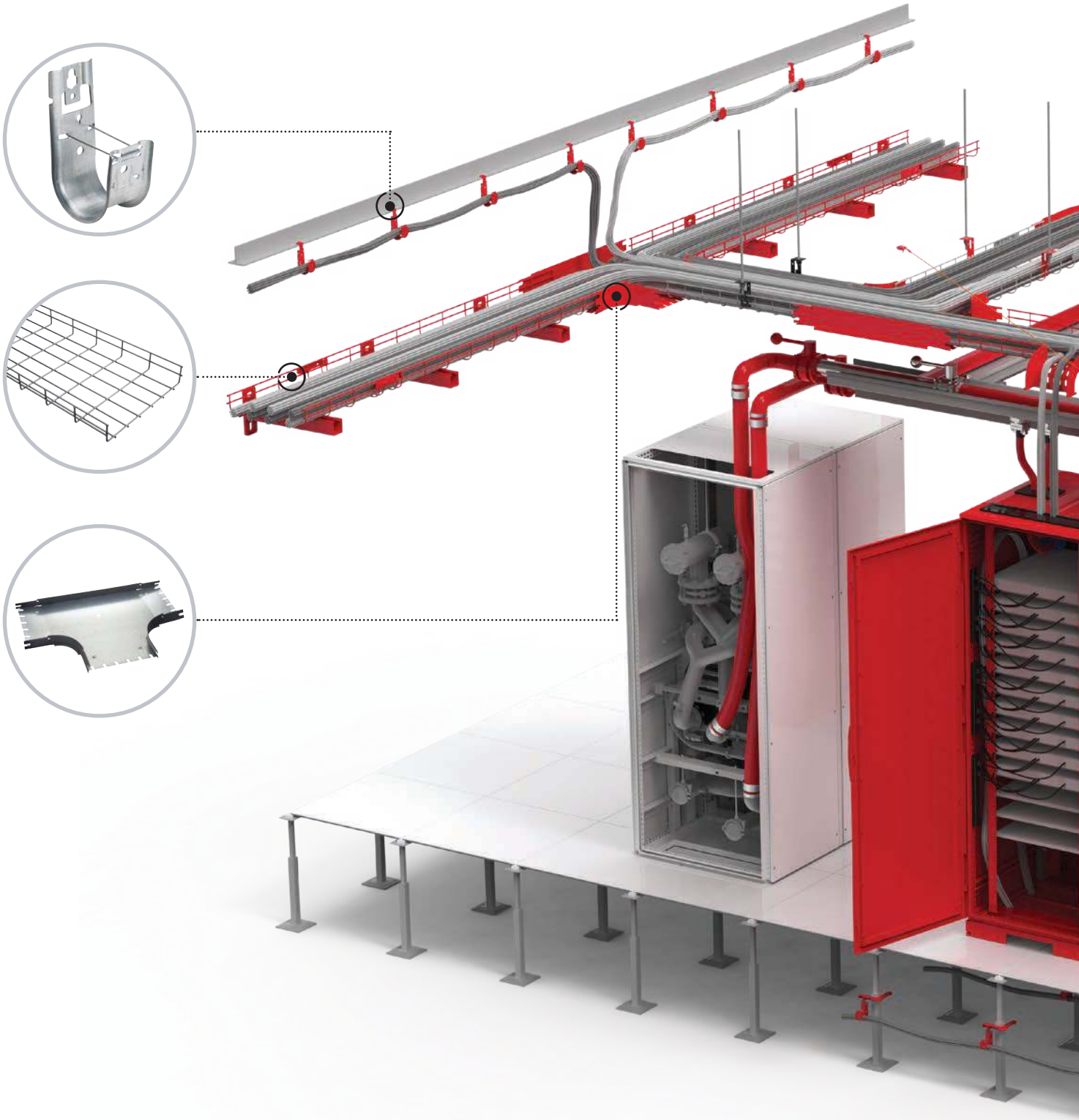

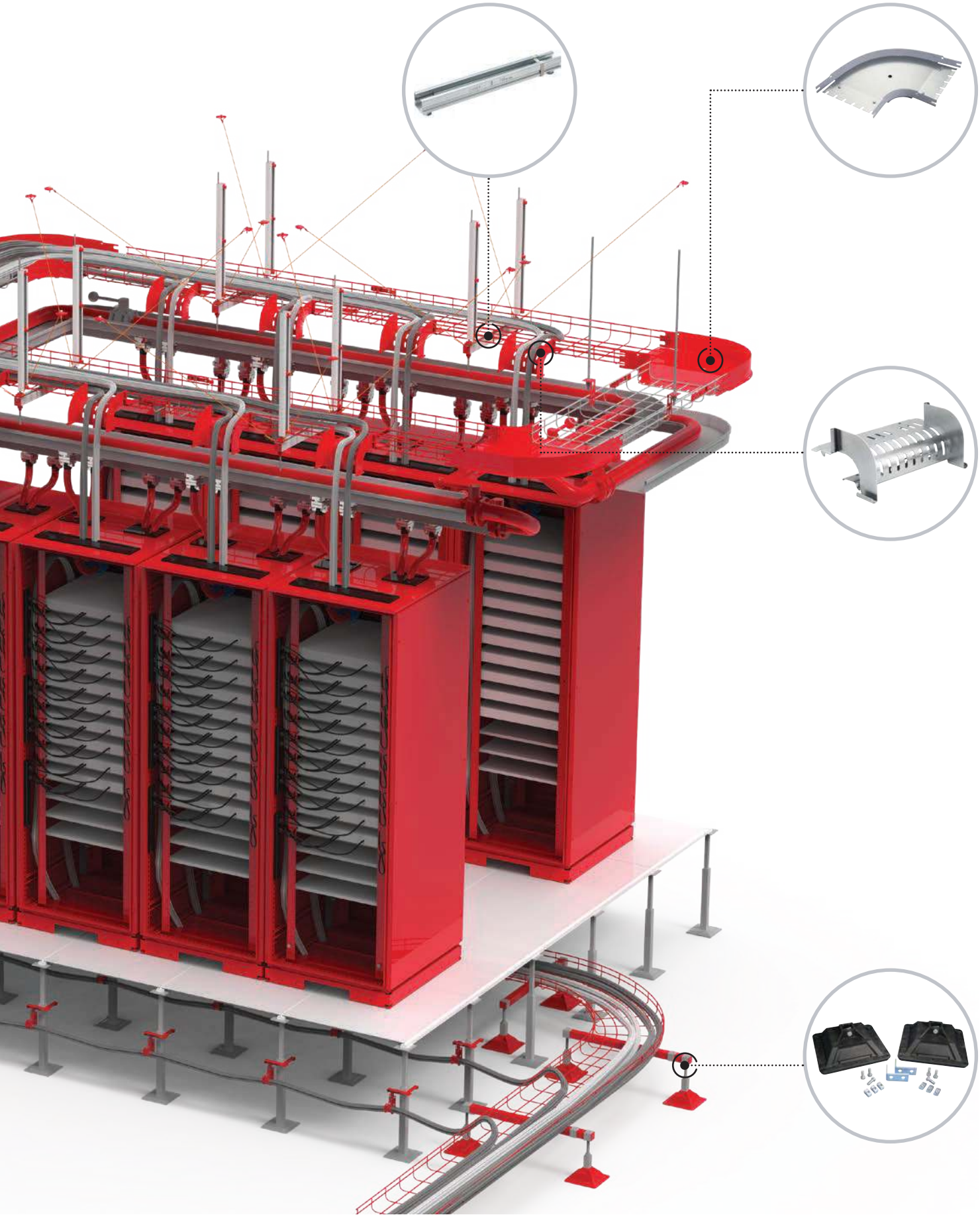

nVent CADDY Wire Basket Tray

NVENT CADDY WIRE BASKET TRAY, SHAPED WIRE

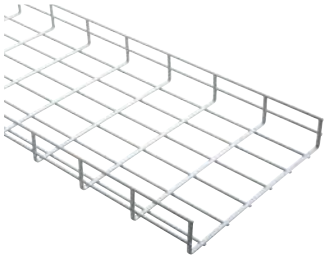

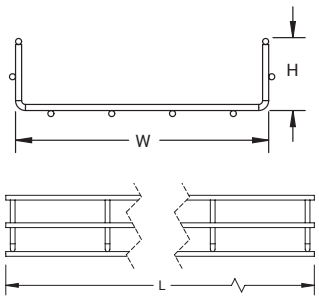

Features

- Provides optimal support for high-performance data cable, up to and including fiber optic, Cat 5e, Cat 6, Cat 6A, and Cat 7
- UL Classified as an equipment ground conductor, no field removal of paint required
- T-Weld edge wire for cable and installer protection
- Mill Certificates are available to document recycled content for possible LEED credits/certification

Material: Steel

Part Number	Finish	Color	Height H	Width W	Length L	Unit Weight	Certifications
WBT2X4S	Pregalvanized	–	2	4	118"	8 lb	UL
WBT2X6S	Pregalvanized	–	2	6	118"	9 lb	UL
WBT2X8S	Pregalvanized	–	2	8	118"	10 lb	UL
WBT2X12S	Pregalvanized	–	2	12	118"	14 lb	UL
WBT2X16S	Pregalvanized	–	2	16	118"	18 lb	UL
WBT2X18S	Pregalvanized	–	2	18	118"	19 lb	UL
WBT2X20S	Pregalvanized	–	2	20	118"	22 lb	UL
WBT2X24S	Pregalvanized	–	2	24	118"	24 lb	UL
WBT4X4S	Pregalvanized	–	4	4	118"	10 lb	UL
WBT4X6S	Pregalvanized	–	4	6	118"	11 lb	UL
WBT4X8S	Pregalvanized	–	4	8	118"	14 lb	UL
WBT4X12S	Pregalvanized	–	4	12	118"	18 lb	UL

nVent CADDY Wire Basket Tray

Part Number	Finish	Color	Height H	Width W	Length L	Unit Weight	Certifications
WBT4X16S	Pregalvanized	–	4	16	118"	22 lb	UL
WBT4X18S	Pregalvanized	–	4	18	118"	23 lb	UL
WBT4X20S	Pregalvanized	–	4	20	118"	24 lb	UL
WBT4X24S	Pregalvanized	–	4	24	118"	29 lb	UL
WBT6X8S	Pregalvanized	–	6	8	118"	18 lb	UL
WBT6X12S	Pregalvanized	–	6	12	118"	22 lb	UL
WBT6X16S	Pregalvanized	–	6	16	118"	24 lb	UL
WBT6X18S	Pregalvanized	–	6	18	118"	25 lb	UL
WBT6X20S	Pregalvanized	–	6	20	118"	29 lb	UL
WBT6X24S	Pregalvanized	–	6	24	118"	32.01 lb	UL
WBT2X4SBA	Pregalvanized, Powder Coated	Black	2	4	118"	8 lb	cUL, UL
WBT2X6SBA	Pregalvanized, Powder Coated	Black	2	6	118"	9 lb	cUL, UL
WBT2X8SBA	Pregalvanized, Powder Coated	Black	2	8	118"	9.78 lb	cUL, UL
WBT2X12SBA	Pregalvanized, Powder Coated	Black	2	12	118"	14 lb	UL, cUL
WBT2X16SBA	Pregalvanized, Powder Coated	Black	2	16	118"	18 lb	cUL, UL
WBT2X18SBA	Pregalvanized, Powder Coated	Black	2	18	118"	19 lb	UL, cUL
WBT2X20SBA	Pregalvanized, Powder Coated	Black	2	20	118"	21.59 lb	UL, cUL
WBT2X24SBA	Pregalvanized, Powder Coated	Black	2	24	118"	24 lb	cUL, UL
WBT4X4SBA	Pregalvanized, Powder Coated	Black	4	4	118"	10 lb	UL, cUL
WBT4X6SBA	Pregalvanized, Powder Coated	Black	4	6	118"	11 lb	cUL, UL
WBT4X8SBA	Pregalvanized, Powder Coated	Black	4	8	118"	14 lb	cUL, UL
WBT4X12SBA	Pregalvanized, Powder Coated	Black	4	12	118"	18 lb	cUL, UL
WBT4X16SBA	Pregalvanized, Powder Coated	Black	4	16	118"	22 lb	cUL, UL
WBT4X18SBA	Pregalvanized, Powder Coated	Black	4	18	118"	23 lb	UL, cUL
WBT4X20SBA	Pregalvanized, Powder Coated	Black	4	20	118"	24 lb	UL, cUL
WBT4X24SBA	Pregalvanized, Powder Coated	Black	4	24	118"	29 lb	UL, cUL
WBT6X8SBA	Pregalvanized, Powder Coated	Black	6	8	118"	18 lb	UL, cUL
WBT6X12SBA	Pregalvanized, Powder Coated	Black	6	12	118"	22 lb	cUL, UL
WBT6X16SBA	Pregalvanized, Powder Coated	Black	6	16	118"	24 lb	cUL, UL
WBT6X18SBA	Pregalvanized, Powder Coated	Black	6	18	118"	25 lb	cUL, UL
WBT6X20SBA	Pregalvanized, Powder Coated	Black	6	20	118"	29 lb	UL, cUL
WBT6X24SBA	Pregalvanized, Powder Coated	Black	6	24	118"	32.01 lb	cUL, UL
WBT2X4SPW	Pregalvanized, Powder Coated	Pewter	2	4	118"	8 lb	cUL, UL
WBT2X6SPW	Pregalvanized, Powder Coated	Pewter	2	6	118"	9 lb	UL, cUL
WBT2X8SPW	Pregalvanized, Powder Coated	Pewter	2	8	118"	9.78 lb	cUL, UL
WBT2X12SPW	Pregalvanized, Powder Coated	Pewter	2	12	118"	14 lb	UL, cUL
WBT2X18SPW	Pregalvanized, Powder Coated	Pewter	2	18	118"	19 lb	UL, cUL
WBT2X24SPW	Pregalvanized, Powder Coated	Pewter	2	24	118"	24 lb	cUL, UL

nVent CADDY Wire Basket Tray

Part Number	Finish	Color	Height H	Width W	Length L	Unit Weight	Certifications
WBT4X4SPW	Pregalvanized, Powder Coated	Pewter	4	4	118"	10 lb	UL, cUL
WBT4X6SPW	Pregalvanized, Powder Coated	Pewter	4	6	118"	11 lb	cUL, UL
WBT4X8SPW	Pregalvanized, Powder Coated	Pewter	4	8	118"	14 lb	cUL, UL
WBT4X12SPW	Pregalvanized, Powder Coated	Pewter	4	12	118"	18 lb	UL, cUL
WBT4X16SPW	Pregalvanized, Powder Coated	Pewter	4	16	118"	22 lb	UL, cUL
WBT4X18SPW	Pregalvanized, Powder Coated	Pewter	4	18	118"	23 lb	UL, cUL
WBT4X20SPW	Pregalvanized, Powder Coated	Pewter	4	20	118"	24 lb	UL, cUL
WBT4X24SPW	Pregalvanized, Powder Coated	Pewter	4	24	118"	29 lb	UL, cUL
WBT6X8SPW	Pregalvanized, Powder Coated	Pewter	6	8	118"	18 lb	UL, cUL
WBT6X12SPW	Pregalvanized, Powder Coated	Pewter	6	12	118"	22 lb	UL, cUL
WBT6X16SPW	Pregalvanized, Powder Coated	Pewter	6	16	118"	24 lb	cUL, UL
WBT6X18SPW	Pregalvanized, Powder Coated	Pewter	6	18	118"	25 lb	cUL, UL
WBT6X20SPW	Pregalvanized, Powder Coated	Pewter	6	20	118"	29 lb	UL, cUL
WBT6X24SPW	Pregalvanized, Powder Coated	Pewter	6	24	118"	32.01 lb	UL
WBT2X4SWH	Pregalvanized, Powder Coated	White	2	4	118"	8 lb	cUL, UL
WBT2X6SWH	Pregalvanized, Powder Coated	White	2	6	118"	9 lb	cUL, UL
WBT2X8SWH	Pregalvanized, Powder Coated	White	2	8	118"	9.78 lb	cUL, UL
WBT2X12SWH	Pregalvanized, Powder Coated	White	2	12	118"	14 lb	UL, cUL
WBT2X16SWH	Pregalvanized, Powder Coated	White	2	16	118"	18 lb	cUL, UL
WBT2X18SWH	Pregalvanized, Powder Coated	White	2	18	118"	19 lb	UL, cUL
WBT2X20SWH	Pregalvanized, Powder Coated	White	2	20	118"	21.59 lb	UL, cUL
WBT2X24SWH	Pregalvanized, Powder Coated	White	2	24	118"	24 lb	cUL, UL
WBT4X4SWH	Pregalvanized, Powder Coated	White	4	4	118"	10 lb	UL, cUL
WBT4X6SWH	Pregalvanized, Powder Coated	White	4	6	118"	11 lb	cUL, UL
WBT4X8SWH	Pregalvanized, Powder Coated	White	4	8	118"	14 lb	cUL, UL
WBT4X12SWH	Pregalvanized, Powder Coated	White	4	12	118"	18 lb	UL, cUL
WBT4X16SWH	Pregalvanized, Powder Coated	White	4	16	118"	22 lb	cUL, UL
WBT4X18SWH	Pregalvanized, Powder Coated	White	4	18	118"	23 lb	cUL, UL
WBT4X20SWH	Pregalvanized, Powder Coated	White	4	20	118"	24 lb	cUL, UL
WBT4X24SWH	Pregalvanized, Powder Coated	White	4	24	118"	29 lb	UL, cUL
WBT6X8SWH	Pregalvanized, Powder Coated	White	6	8	118"	18 lb	UL, cUL
WBT6X12SWH	Pregalvanized, Powder Coated	White	6	12	118"	22 lb	UL, cUL
WBT6X16SWH	Pregalvanized, Powder Coated	White	6	16	118"	24 lb	cUL, UL
WBT6X18SWH	Pregalvanized, Powder Coated	White	6	18	118"	25 lb	cUL, UL
WBT6X24SWH	Pregalvanized, Powder Coated	White	6	24	118"	32.01 lb	UL, cUL

nVent CADDY Wire Basket Tray

NVENT CADDY WIRE BASKET TRAY, ROUND WIRE

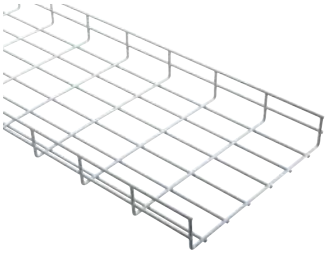

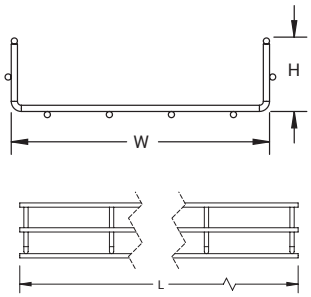

Features

- Provides optimal support for high-performance data cable, up to and including Cat 5e, Cat 6, Cat 6A, Cat 7 and fiber optic
- UL Classified as an equipment ground conductor, no field removal of paint required
- T-Weld edge wire for cable and installer protection
- Mill Certificates are available to document recycled content for possible LEED credits/certification

Material: Steel

Part Number	Finish	Color	Height H	Width W	Length L	Unit Weight
WBT2X6EG	Electrogalvanized	–	2"	6	118"	9 lb
WBT2X8EG	Electrogalvanized	–	2"	8	118"	10 lb
WBT2X12EG	Electrogalvanized	–	2"	12	118"	14 lb
WBT2X16EG	Electrogalvanized	–	2"	16	118"	18 lb
WBT2X20EG	Electrogalvanized	–	2"	20	118"	21.59 lb
WBT4X4EG	Electrogalvanized	–	4"	4	118"	10 lb
WBT4X6EG	Electrogalvanized	–	4"	6	118"	11 lb
WBT4X8EG	Electrogalvanized	–	4"	8	118"	14 lb
WBT4X12EG	Electrogalvanized	–	4"	12	118"	18 lb
WBT4X16EG	Electrogalvanized	–	4"	16	118"	22 lb
WBT4X18EG	Electrogalvanized	–	4"	18	118"	23 lb
WBT4X20EG	Electrogalvanized	–	4"	20	118"	24 lb
WBT4X24EG	Electrogalvanized	–	4"	24	118"	29 lb
WBT6X8EG	Electrogalvanized	–	6"	8	118"	18 lb
WBT6X12EG	Electrogalvanized	–	6"	12	118"	22 lb
WBT6X16EG	Electrogalvanized	–	6"	16	118"	24 lb
WBT6X20EG	Electrogalvanized	–	6"	20	118"	29 lb
WBT6X24EG	Electrogalvanized	–	6"	24	118"	22 lb
WBT2X4	Pregalvanized	–	2"	4	118"	8 lb
WBT2X4EG	Pregalvanized	–	2"	4	118"	8 lb
WBT2X6	Pregalvanized	–	2"	6	118"	9 lb
WBT2X8	Pregalvanized	–	2"	8	118"	9.78 lb
WBT2X12	Pregalvanized	–	2"	12	118"	14 lb
WBT2X16	Pregalvanized	–	2"	16	118"	18 lb
WBT2X18EG	Pregalvanized	–	2"	18	118"	19 lb
WBT2X18	Pregalvanized	–	2"	18	118"	19 lb

nVent CADDY Wire Basket Tray

Part Number	Finish	Color	Height H	Width W	Length L	Unit Weight
WBT2X20	Pregalvanized	–	2"	20	118"	21.59 lb
WBT2X24EG	Pregalvanized	–	2"	24	118"	24 lb
WBT2X24	Pregalvanized	–	2"	24	118"	24 lb
WBT4X4	Pregalvanized	–	4"	4	118"	10 lb
WBT4X6	Pregalvanized	–	4"	6	118"	11 lb
WBT4X8	Pregalvanized	–	4"	8	118"	14 lb
WBT4X12	Pregalvanized	–	4"	12	118"	18 lb
WBT4X16	Pregalvanized	–	4"	16	118"	22 lb
WBT4X18	Pregalvanized	–	4"	18	118"	23 lb
WBT4X20	Pregalvanized	–	4"	20	118"	24 lb
WBT4X24	Pregalvanized	–	4"	24	118"	29 lb
WBT6X8	Pregalvanized	–	6"	8	118"	18 lb
WBT6X12	Pregalvanized	–	6"	12	118"	22 lb
WBT6X16	Pregalvanized	–	6"	16	118"	24 lb
WBT6X18	Pregalvanized	–	6"	18	118"	25 lb
WBT6X18EG	Pregalvanized	–	6"	18	118"	25 lb
WBT6X20	Pregalvanized	–	6"	18	118"	29 lb
WBT6X24	Pregalvanized	–	6"	24	118"	32.01 lb
WBT2X4BA	Pregalvanized	Black	2"	4	118"	8 lb
WBT2X6BA	Pregalvanized	Black	2"	6	118"	9 lb
WBT2X8BA	Pregalvanized	Black	2"	8	118"	10 lb
WBT2X12BA	Pregalvanized	Black	2"	12	118"	14 lb
WBT2X16BA	Pregalvanized	Black	2"	16	118"	18 lb
WBT2X18BA	Pregalvanized	Black	2"	18	118"	19 lb
WBT2X20BA	Pregalvanized	Black	2"	20	118"	21.59 lb
WBT2X24BA	Pregalvanized	Black	2"	24	118"	24 lb
WBT4X4BA	Pregalvanized	Black	4"	4	118"	10 lb
WBT4X6BA	Pregalvanized	Black	4"	6	118"	11 lb
WBT4X8BA	Pregalvanized	Black	4"	8	118"	14 lb
WBT4X12BA	Pregalvanized	Black	4"	12	118"	18 lb
WBT4X16BA	Pregalvanized	Black	4"	16	118"	22 lb
WBT4X18BA	Pregalvanized	Black	4"	18	118"	23 lb
WBT4X20BA	Pregalvanized	Black	4"	20	118"	24 lb
WBT4X24BA	Pregalvanized	Black	4"	24	118"	29 lb
WBT6X8BA	Pregalvanized	Black	6"	8	118"	18 lb
WBT6X12BA	Pregalvanized	Black	6"	12	118"	22 lb

nVent CADDY Wire Basket Tray

Part Number	Finish	Color	Height H	Width W	Length L	Unit Weight
WBT6X16BA	Pregalvanized	Black	6"	16	118"	24 lb
WBT6X18BA	Pregalvanized	Black	6"	18	118"	25 lb
WBT6X20BA	Pregalvanized	Black	6"	20	118"	29 lb
WBT6X24BA	Pregalvanized	Black	6"	24	118"	32.01 lb
WBT2X4PW	Pregalvanized	Pewter	2"	4	118"	8 lb
WBT2X6PW	Pregalvanized	Pewter	2"	6	118"	9 lb
WBT2X8PW	Pregalvanized	Pewter	2"	8	118"	9.78 lb
WBT2X12PW	Pregalvanized	Pewter	2"	12	118"	14 lb
WBT2X18PW	Pregalvanized	Pewter	2"	18	118"	19 lb
WBT2X24PW	Pregalvanized	Pewter	2"	24	118"	24 lb
WBT4X4PW	Pregalvanized	Pewter	4"	4	118"	10 lb
WBT4X6PW	Pregalvanized	Pewter	4"	6	118"	11 lb
WBT4X8PW	Pregalvanized	Pewter	4"	8	118"	14 lb
WBT4X12PW	Pregalvanized	Pewter	4"	12	118"	18 lb
WBT4X18PW	Pregalvanized	Pewter	4"	18	118"	23 lb
WBT4X24PW	Pregalvanized	Pewter	4"	24	118"	29 lb
WBT6X18PW	Pregalvanized	Pewter	6"	18	118"	25 lb
WBT2X4WH	Pregalvanized	White	2"	4	118"	8 lb
WBT2X6WH	Pregalvanized	White	2"	6	118"	9 lb
WBT2X8WH	Pregalvanized	White	2"	8	118"	9.78 lb
WBT2X12WH	Pregalvanized	White	2"	12	118"	14 lb
WBT2X16WH	Pregalvanized	White	2"	16	118"	18 lb
WBT2X18WH	Pregalvanized	White	2"	18	118"	19 lb
WBT2X24WH	Pregalvanized	White	2"	24	118"	24 lb
WBT4X4WH	Pregalvanized	White	4"	4	118"	10 lb
WBT4X6WH	Pregalvanized	White	4"	6	118"	11 lb
WBT4X8WH	Pregalvanized	White	4"	8	118"	14 lb
WBT4X12WH	Pregalvanized	White	4"	12	118"	18 lb
WBT4X16WH	Pregalvanized	White	4"	16	118"	22 lb
WBT4X18WH	Pregalvanized	White	4"	18	118"	23 lb
WBT4X24WH	Pregalvanized	White	4"	24	118"	29 lb
WBT6X8WH	Pregalvanized	White	6"	8	118"	18 lb
WBT6X12WH	Pregalvanized	White	6"	12	118"	22 lb
WBT6X18WH	Pregalvanized	White	6"	18	118"	25 lb
WBT6X24WH	Pregalvanized	White	6"	24	118"	32.01 lb

nVent CADDY Wire Basket Tray Supports

NVENT CADDY WIRE BASKET TRAY C BRACKET

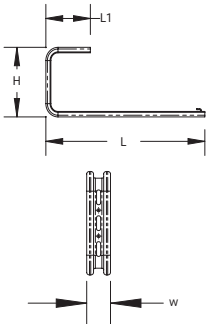

Features

- Easy-to-use quick connect feature
- Designed to be used with the nVent CADDY Wire Basket Tray Washer Support and nVent CADDY Wire Basket Tray Ground Splice
- Side load access for cable installation
- Ideal for ceiling, wall and channel installations
- Side load access for simple cable installation

Material: Steel
Finish: Electrogalvanized

Part Number	Color	Height H	Width W	Length L	Length 1 L1	Hole Size HS	Unit Weight
WBTCBRKT12BA	Black	7-7/8"	1.63"	13.8"	5-1/2"	0.281"	2.26 lb
WBTCBRKT8BA	Black	7-7/8"	1.63"	9.9"	5-1/2"	0.281"	1.91 lb
WBTCBRKT12WH	White	7-7/8"	1.63"	13.8"	5-1/2"	0.281"	2.26 lb
WBTCBRKT8	–	7-7/8"	1.63"	9.9"	5-1/2"	0.281"	1.91 lb
WBTCBRKT18	–	7-7/8"	1.63"	19.65"	5-1/2"	0.281"	2.8 lb
WBTCBRKT6BA	Black	7-7/8"	1.63"	7.95"	5-1/2"	0.281"	1.74 lb
WBTCBRKT18BA	Black	7-7/8"	1.63"	19.65"	5-1/2"	0.281"	2.8 lb
WBTCBRKT6	–	7-7/8"	1.63"	7.95"	5-1/2"	0.281"	1.74 lb
WBTCBRKT18WH	White	7-7/8"	1.63"	19.65"	5-1/2"	0.281"	2.8 lb
WBTCBRKT12	–	7-7/8"	1.63"	13.8"	5-1/2"	0.281"	2.26 lb
WBTCBRKT4BA	Black	7-7/8"	1.63"	5.981"	5-1/2"	0.281"	1.56 lb
WBTCBRKT4	–	7-7/8"	1.63"	5.981"	5-1/2"	0.281"	1.56 lb

nVent CADDY Wire Basket Tray Supports

NVENT CADDY WIRE BASKET TRAY L BRACKET

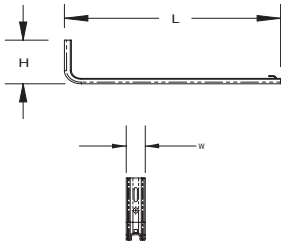

Material: Steel
Finish: Electrogalvanized

Features

- Easy-to-use quick connect feature
- Designed to be used with the nVent CADDY Wire Basket Tray Washer Support and nVent CADDY Wire Basket Tray Ground Splice
- Utilize with the nVent CADDY Wire Basket Tray C Bracket for multi-tier cable tray runs

Part Number	Color	Height H	Width W	Length L	Hole Size HS	Unit Weight
WBTLBRKT8BA	Black	5"	1.63"	14.173"	0.282"	1.22 lb
WBTLBRKT12BA	Black	5"	1.63"	14.173"	0.282"	1.57 lb
WBTLBRKT8WH	White	5"	1.63"	14.173"	0.282"	1.22 lb
WBTLBRKT12WH	White	5"	1.63"	14.173"	0.282"	1.57 lb
WBTLBRKT4	–	5"	1.63"	14.173"	0.282"	0.87 lb
WBTLBRKT4BA	Black	5"	1.63"	14.173"	0.282"	0.87 lb
WBTLBRKT4WH	White	5"	1.63"	14.173"	0.282"	0.87 lb
WBTLBRKT6	–	5"	1.63"	14.173"	0.282"	1.05 lb
WBTLBRKT12	–	5"	1.63"	14.173"	0.282"	1.57 lb
WBTLBRKT6BA	Black	5"	1.63"	14.173"	0.282"	1.05 lb
WBTLBRKT6WH	White	5"	1.63"	14.173"	0.282"	1.05 lb
WBTLBRKT8	–	5"	1.63"	14.173"	0.282"	1.22 lb

NVENT CADDY WIRE BASKET TRAY CENTER SUPPORT

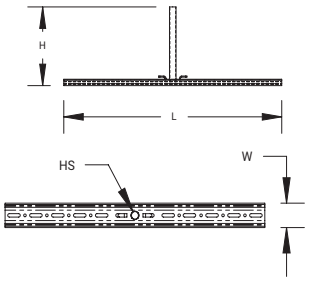

Material: Steel
Finish: Electrogalvanized

Features

- Use as a central support when hanging with threaded rod
- Designed to be used with the nVent CADDY Wire Basket Tray Splice Kit
- Supported with 3/8 or 1/2 in threaded rod

Part Number	Color	Height H	Width W	Length L	Hole Size HS	Unit Weight
WBTCTSPRT4WH	White	7.62"	1.63"	4.14"	0.62"	0.318 lb
WBTCTSPRT4	–	7.62"	1.63"	4.14"	0.62"	0.318 lb
WBTCTSPRT4BA	Black	7.62"	1.63"	4.14"	0.62"	0.318 lb
WBTCTSPRT6WH	White	7.62"	1.63"	5.818"	0.62"	0.37 lb
WBTCTSPRT6	–	7.62"	1.63"	5.818"	0.62"	0.37 lb
WBTCTSPRT8WH	White	7.62"	1.63"	7.502"	0.62"	0.411 lb
WBTCTSPRT8	–	7.62"	1.63"	7.502"	0.62"	0.411 lb
WBTCTSPRT12WH	White	7.62"	1.63"	11.503"	0.62"	0.556 lb
WBTCTSPRT12	–	7.62"	1.63"	11.503"	0.62"	0.556 lb

nVent CADDY Wire Basket Tray Supports

NVENT CADDY WIRE BASKET TRAY CEILING SUPPORT

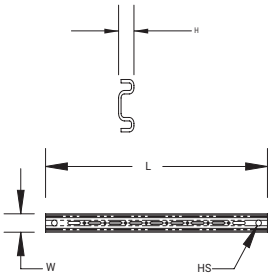

Features

- Use as a center support or support provisioned from both ends
- Designed to be used with the nVent CADDY Wire Basket Tray Ground Splice and nVent CADDY Wire Basket Tray Splice Kit
- Supported with 3/8 or 1/2 in threaded rod

Material: Steel

Part Number	Finish	Color	Height H	Width W	Length L	Hole Size HS	Unit Weight
WBTCLSPRT6BA	Pregalvanized	Black	0.62"	1.63"	9.386"	0.531"	0.55 lb
WBTCLSPRT6	Pregalvanized	–	0.62"	1.63"	9.386"	0.531"	0.55 lb
WBTCLSPRT6WH	Pregalvanized	White	0.62"	1.63"	9.386"	0.531"	0.55 lb
WBTCLSPRT8WH	Pregalvanized	White	0.62"	1.63"	11.354"	0.531"	0.8 lb
WBTCLSPRT8BA	Pregalvanized	Black	0.62"	1.63"	11.354"	0.531"	0.8 lb
WBTCLSPRT8	Pregalvanized	–	0.62"	1.63"	11.354"	0.531"	0.8 lb
WBTCLSPRT12BA	Electrogalvanized	Black	0.62"	1.63"	15.292"	0.531"	1.1 lb
WBTCLSPRT12WH	Electrogalvanized	White	0.62"	1.63"	15.292"	0.531"	1.1 lb
WBTCLSPRT12	Electrogalvanized	–	0.62"	1.63"	15.292"	0.531"	1.1 lb
WBTCLSPRT16WH	Pregalvanized	White	0.62"	1.63"	19.229"	0.531"	1.5 lb
WBTCLSPRT18WH	Electrogalvanized	White	0.62"	1.63"	21.198"	0.531"	1.6 lb
WBTCLSPRT16BA	Pregalvanized	Black	0.62"	1.63"	19.229"	0.531"	1.5 lb
WBTCLSPRT16	Pregalvanized	–	0.62"	1.63"	19.229"	0.531"	1.5 lb
WBTCLSPRT18BA	Electrogalvanized	Black	0.62"	1.63"	21.198"	0.531"	1.6 lb
WBTCLSPRT24WH	Electrogalvanized	White	0.62"	1.63"	27.104"	0.531"	1.9 lb
WBTCLSPRT20BA	Pregalvanized	Black	0.62"	1.63"	23.167"	0.531"	1.9 lb
WBTCLSPRT18	Electrogalvanized	–	0.62"	1.63"	21.198"	0.531"	1.6 lb
WBTCLSPRT20	Pregalvanized	–	0.62"	1.63"	23.167"	0.531"	1.9 lb
WBTCLSPRT24	Electrogalvanized	–	0.62"	1.63"	27.104"	0.531"	1.9 lb
WBTCLSPRT24BA	Electrogalvanized	Black	0.62"	1.63"	27.104"	0.531"	1.9 lb
WBTCLSPRT20WH	Pregalvanized	White	0.62"	1.63"	23.167"	0.531"	1.9 lb

nVent CADDY Wire Basket Tray Supports

NVENT CADDY WIRE BASKET TRAY INDEPENDENT UNDERFLOOR SUPPORT

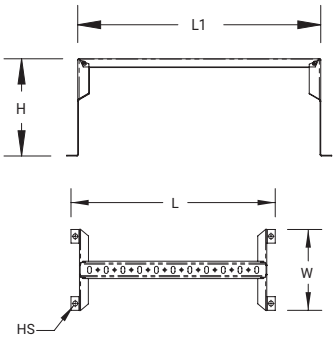

Features

- Designed to be used with the nVent CADDY Wire Basket Tray Washer Support and nVent CADDY Wire Basket Tray Ground Splice
- Maintains a fixed and secure distance from the ground to ensure safety and accessibility
- Available in a range of sizes to match wire basket tray design
- Fixed height ensures a level installation

Material: Steel
Finish: Pregalvanized

Part Number	Height H	Length L	Length 1 L1	Width W	Hole Size HS	Unit Weight
WBTUS04	1.26"	30.2"	22.078"	9.252"	0.563"	1.9 lb
WBTUS06	1.26"	34.173"	22.078"	9.252"	0.563"	2.101 lb
WBTUS24	1.26"	70"	22.078"	9.252"	0.563"	7.1 lb
WBTUS08	1.26"	37.992"	22.078"	9.252"	0.563"	2.401 lb
WBTUS12	1.26"	46.22"	22.078"	9.252"	0.563"	3.51 lb
WBTUS18	1.26"	58.03"	22.078"	9.252"	0.563"	5.3 lb

NVENT CADDY WIRE BASKET TRAY TERMINATION SUPPORT

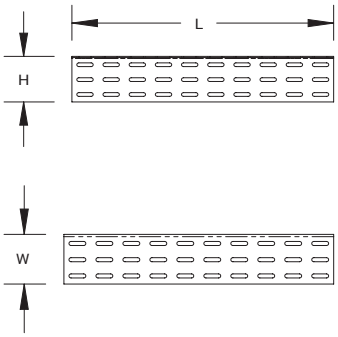

Features

- Designed to be used with the nVent CADDY Wire Basket Tray Splice Kit
- Available in a range of widths to match wire basket tray design
- Provides a solid bottom for the tray

Material: Steel
Finish: Pregalvanized

Part Number	Color	Height H	Width W	Length L	Unit Weight
WBTTERM12BA	Black	3.03"	3.03"	11.496"	1.83 lb

nVent CADDY Wire Basket Tray Hardware

NVENT CADDY WIRE BASKET TRAY BAR SPLICE

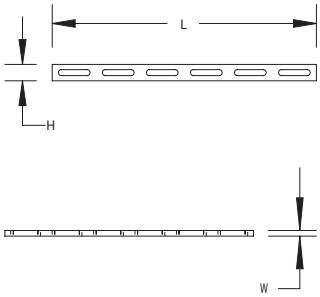

Features

- Multiple color options to coordinate with cable tray selection
- Creates additional support for cable tray runs
- Optimal for angles 30 degrees and smaller

Material: Steel
Finish: Electrogalvanized

Part Number	Color	Height H	Width W	Length L	Unit Weight	Certifications
WBTBSPLICEWH	White	0.688"	0.179"	12"	0.28 lb	–
WBTBSPLICEKITWH	White	0.688"	0.179"	12"	0.28 lb	–
WBTBSPLICEKITBA	Black	0.688"	0.179"	12"	0.28 lb	UL
WBTBSPLICE	–	0.688"	0.179"	12"	0.28 lb	–
WBTBSPLICEKIT	–	0.688"	0.179"	12"	0.28 lb	UL
WBTBSPLICEBA	Black	0.688"	0.179"	12"	0.28 lb	–

NVENT CADDY WIRE BASKET TRAY DOUBLE SPLICE

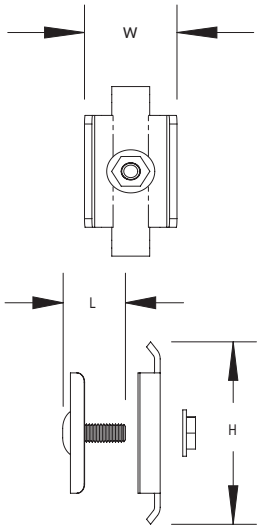

Features

- Easy-to-use, requiring only simple hand tools to install
- Three-piece bolt, washer and nut combination
- Ensures a stable and tight fit between tray sections
- Works with a wide range of tray sizes and configurations

Material: Steel
Finish: Electrogalvanized

Part Number	Color	Height H	Width W	Length L	Unit Weight
WBTDBLSPLICEWH	White	2.464"	1.204"	1.071"	0.16 lb
WBTDBLSPLICEBA	Black	2.464"	1.204"	1.071"	0.16 lb

nVent CADDY Wire Basket Tray Hardware

NVENT CADDY WIRE BASKET TRAY CORNER SPLICE

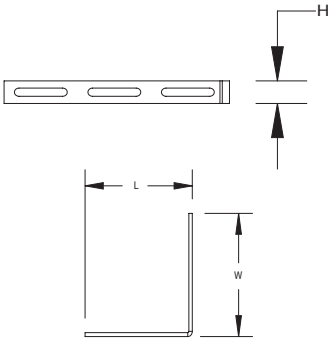

Features

- Designed to be used with nVent CADDY Wire Basket Tray and nVent CADDY Wire Basket Tray Splice Kit
- Easily secures corners for a clean finish

Material: Steel
Finish: Electrogalvanized

Part Number	Color	Height H	Width W	Length L	Unit Weight
WBTCSPLICEWH	White	0.688"	6"	6"	0.1 lb
WBTCSPLICEBA	Black	0.688"	6"	6"	0.1 lb
WBTCSPLICE		0.688"	6"	6"	0.1 lb

NVENT CADDY WIRE BASKET TRAY RADIUS CORNER SPLICE

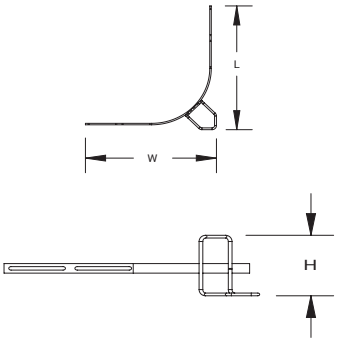

Features

- Designed to be used with nVent CADDY Wire Basket Tray Splice Kit
- Easy-to-use, requiring only simple hand tools to install
- Includes two splice bars and eight sets of the splice kit

Material: Steel
Finish: Electrogalvanized

Part Number	Color	Height H	Length L	Width W	Unit Weight
WBTRCSPLICEBA	Black	2.318"	12.742"	12.742"	0.3 lb

nVent CADDY Wire Basket Tray Hardware

NVENT CADDY WIRE BASKET TRAY SPLICE KIT

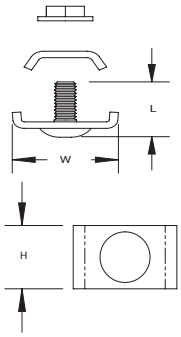

Features

- Three-piece bolt, washer and nut combination
- Ensures a stable and tight fit between tray sections
- Works with a wide range of tray sizes and configurations
- Used to create a continuous grounded bond between sections of cable tray and protects assets in case of a lightning strike

Material: Steel
Finish: Electrogalvanized

Part Number	Color	Height H	Length L	Width W	Unit Weight
WBTSPLICE	–	0.73"	0.821"	1.21"	3.2 lb
WBTSPLICEBA	Black	0.73"	0.821"	1.21"	3.2 lb

NVENT CADDY WIRE BASKET TRAY WASHER SUPPORT

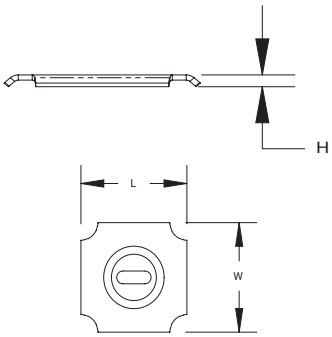

Features

- Easy-to-use, requiring only simple hand tools to install
- Use threaded rod protectors to protect cables
- Can be used as a hold-down method or fitting splice

Material: Steel
Finish: Electrogalvanized

Part Number	Color	Height H	Width W	Length L	Unit Weight	Certifications
WBTWASHSPRTWH	White	0.177"	2.42"	2.42"	0.11 lb	–
WBTWASHSPRTBA	Black	0.177"	2.42"	2.42"	0.11 lb	cUL, UL
WBTWASHSPRT	–	0.177"	2.42"	2.42"	0.11 lb	cUL, UL

nVent CADDY Wire Basket Tray Hardware

NVENT CADDY WIRE BASKET TRAY GROUND BOLT

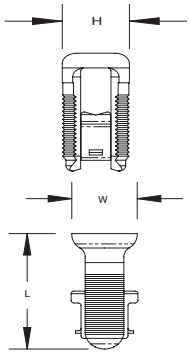

Features

- Easy-to-use, requiring only simple hand tools to install
- Used to create a continuous grounded bond between sections of cable tray and can protect assets in case of a lightning strike

Material: Copper Alloy

Part Number	Height H	Length L	Width W	Unit Weight
WBTGRDBOLT	0.587"	1.402"	0.735"	0.5 lb

NVENT CADDY WIRE BASKET TRAY TOOL-FREE SPLICE

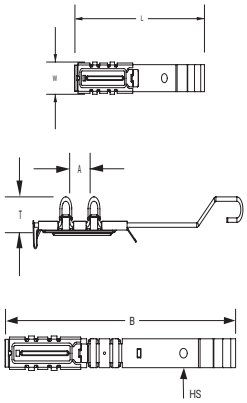

Features

- Secure hold with locking mechanism keeping trays in place
- No assembly required
- No sharp edges or catching points for wire
- Reusable and tool-free—easy-to-install, easy-to-remove

Material: Steel
Finish: Electrogalvanized

Part Number	B	Length L	Width W	Thickness T	A	Hole Size HS	Weight
WBTQSPLS	8"	5.8"	1"	0.5"	0.56"	0.18"	0.06lb
WBTQSPL	8"	5.8"	1"	0.5"	0.56"	0.18"	0.06lb

nVent CADDY Wire Basket Tray Transitions

NVENT CADDY WIRE BASKET TRAY PREFORM INTERSECTION

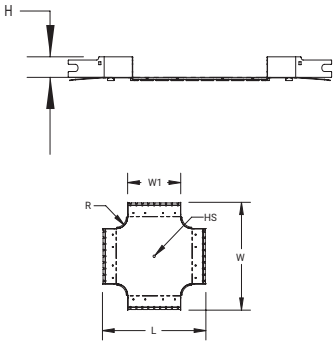

Features

- Multiple color options to coordinate with cable tray selection
- Flame-retardant polymer rails ensure the safety of high-performance cabling
- Routes cable systems in multiple directions
- Provides a clean bend radius and helps to protect the natural bend radius of varying cable systems

Material: Steel
Finish: Pregalvanized; Polyurethane

Part Number	Color	Height H	Width W	Length L	Hole Size HS	Radius R	Unit Weight	Certifications
WBTI2X4	–	2"	20.12"	20.12"	–	3.726"	0.411 lb	UL, cUL
WBTI2X4BA	Black	2"	20.12"	20.12"	–	3.726"	0.411 lb	–
WBTI2X4WH	White	2"	20.12"	20.12"	–	3.726"	0.411 lb	–
WBTI2X6BA	Black	2"	22.1"	22.1"	–	3.726"	0.617 lb	–
WBTI2X6	–	2"	22.1"	22.1"	–	3.726"	0.617 lb	UL, cUL
WBTI2X20	–	2"	35.9"	35.9"	3/4"	3.726"	2.88 lb	UL, cUL
WBTI2X24WH	White	2"	40"	40"	3/4"	3.726"	3.704 lb	–
WBTI2X12WH	White	2"	28"	28"	3/4"	3.726"	1.44 lb	–
WBTI2X24BA	Black	2"	40"	40"	3/4"	3.726"	3.704 lb	–
WBTI2X12BA	Black	2"	28"	28"	3/4"	3.726"	1.44 lb	–
WBTI2X18BA	Black	2"	33.9"	33.9"	3/4"	3.726"	2.469 lb	–
WBTI2X24	–	2"	40"	40"	3/4"	3.726"	3.704 lb	cUL, UL
WBTI2X20BA	Black	2"	35.9"	35.9"	3/4"	3.726"	2.88 lb	–
WBTI2X18	–	2"	33.9"	33.9"	3/4"	3.726"	2.469 lb	UL, cUL
WBTI2X16BA	Black	2"	32"	32"	3/4"	3.726"	2.057 lb	–
WBTI2X12	–	2"	28"	28"	3/4"	3.726"	1.44 lb	cUL, UL
WBTI2X8WH	White	2"	24.1"	24.1"	–	3.726"	1.029 lb	–
WBTI2X8	–	2"	24.1"	24.1"	–	3.726"	1.029 lb	cUL, UL
WBTI2X8BA	Black	2"	24.1"	24.1"	–	3.726"	1.029 lb	–

nVent CADDY Wire Basket Tray Transitions

NVENT CADDY WIRE BASKET TRAY PREFORM ELBOW 90°

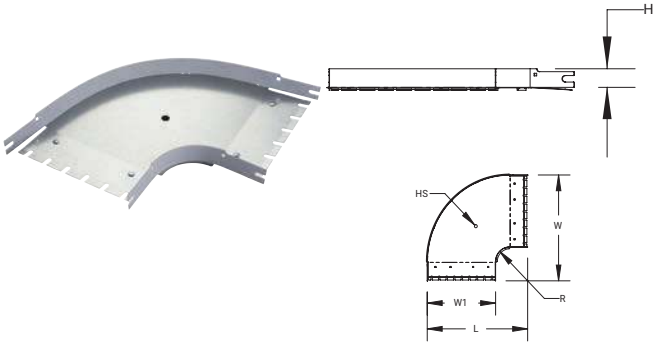

Features

- Multiple color options to coordinate with cable tray selection
- Flame-retardant polymer rails ensure the safety of high-performance cabling
- Routes cable systems in multiple directions
- Provides a clean bend radius and helps to protect the natural bend radius of varying cable systems

Material: Steel
Finish: Pregalvanized; Polyurethane

Part Number	Color	Height H	Width W	Length L	Hole Size HS	Radius R	Unit Weight	Certifications
WBTR902X4WH	White	2"	12-1/2"	12-1/2"	–	3.726"	0.206 lb	–
WBTR902X4BA	Black	2"	12-1/2"	12-1/2"	–	3.726"	0.206 lb	–
WBTR902X4	–	2"	12-1/2"	12-1/2"	–	3.726"	0.206 lb	cUL, UL
WBTR902X6	–	2"	14.4"	14.4"	–	3.726"	0.411 lb	cUL, UL
WBTR902X8WH	White	2"	16.4"	16.4"	–	3.726"	0.411 lb	–
WBTR902X6BA	Black	2"	14.4"	14.4"	–	3.726"	0.411 lb	–
WBTR902X8BA	Black	2"	16.4"	16.4"	–	3.726"	0.411 lb	–
WBTR902X6WH	White	2"	14.4"	14.4"	–	3.726"	0.411 lb	–
WBTR902X8	–	2"	16.4"	16.4"	–	3.726"	0.411 lb	UL, cUL
WBTR902X18BA	Black	2"	26.21"	26.21"	3/4"	3.726"	1.44 lb	–
WBTR902X12BA	Black	2"	20.3"	20.3"	3/4"	3.726"	0.823 lb	–
WBTR902X12WH	White	2"	20.3"	20.3"	3/4"	3.726"	0.823 lb	–
WBTR902X16	–	2"	24.3"	24.3"	3/4"	3.726"	1.235 lb	UL, cUL
WBTR902X24WH	White	2"	32.2"	32.2"	3/4"	3.726"	2.263 lb	–
WBTR902X24BA	Black	2"	32.2"	32.2"	3/4"	3.726"	2.263 lb	–
WBTR902X12	–	2"	20.3"	20.3"	3/4"	3.726"	0.823 lb	cUL, UL
WBTR902X24	–	2"	32.2"	32.2"	3/4"	3.726"	2.263 lb	cUL, UL
WBTR902X16WH	White	2"	24.3"	24.3"	3/4"	3.726"	1.235 lb	–
WBTR902X20BA	Black	2"	28.2"	28.2"	3/4"	3.726"	1.852 lb	–
WBTR902X18WH	White	2"	26.21"	26.21"	3/4"	3.726"	1.44 lb	–
WBTR902X18	–	2"	26.21"	26.21"	3/4"	3.726"	1.44 lb	cUL, UL

nVent CADDY Wire Basket Tray Transitions

NVENT CADDY WIRE BASKET TRAY PREFORM TEE

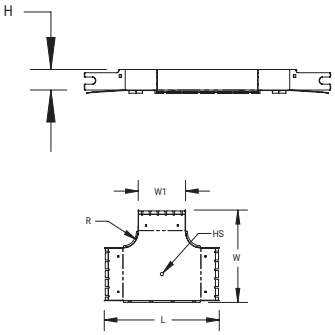

Features

- Multiple color options to coordinate with cable tray selection
- Flame-retardant polymer rails ensure the safety of high-performance cabling
- Routes cable systems in two or three directions
- Provides a clean bend radius and helps to protect the natural bend radius of varying cable systems

Material: Steel
Finish: Pregalvanized; Polyurethane

Part Number	Color	Height H	Width W	Length L	Hole Size HS	Radius R	Unit Weight
WBTT2X4WH	White	2"	12-1/2"	20.2"	–	3.726"	0.206 lb
WBTT2X4BA	Black	2"	12-1/2"	20.2"	–	3.726"	0.206 lb
WBTT2X4	–	2"	12-1/2"	20.2"	–	3.726"	0.206 lb
WBTT2X6WH	White	2"	14.4"	22.1"	–	3.726"	0.617 lb
WBTT2X6	–	2"	14.4"	22.1"	–	3.726"	0.617 lb
WBTT2X6BA	Black	2"	14.4"	22.1"	–	3.726"	0.617 lb
WBTT2X20BA	Black	2"	28.2"	35.9"	3/4"	3.726"	2.675 lb
WBTT2X16WH	White	2"	24.3"	32"	3/4"	3.726"	1.646 lb
WBTT2X24BA	Black	2"	32.2"	39.9"	3/4"	3.726"	3.292 lb
WBTT2X24WH	White	2"	32.2"	39.9"	3/4"	3.726"	3.292 lb
WBTT2X16	–	2"	24.3"	32"	3/4"	3.726"	1.646 lb
WBTT2X18BA	Black	2"	26.3"	34"	3/4"	3.726"	2.057 lb
WBTT2X18WH	White	2"	26.3"	34"	3/4"	3.726"	2.057 lb
WBTT2X24	–	2"	32.2"	39.9"	3/4"	3.726"	3.292 lb
WBTT2X12	–	2"	20.3"	28"	3/4"	3.726"	1.235 lb
WBTT2X12BA	Black	2"	20.3"	28"	3/4"	3.726"	1.235 lb
WBTT2X12WH	White	2"	20.3"	28"	3/4"	3.726"	1.235 lb
WBTT2X20WH	White	2"	28.2"	35.9"	3/4"	3.726"	2.675 lb
WBTT2X18	–	2"	26.3"	34"	3/4"	3.726"	2.057 lb
WBTT2X16BA	Black	2"	24.3"	32"	3/4"	3.726"	1.646 lb
WBTT2X8BA	Black	2"	16.4"	24.1"	–	3.726"	0.823 lb
WBTT2X8WH	White	2"	16.4"	24.1"	–	3.726"	0.823 lb
WBTT2X8	–	2"	16.4"	24.1"	–	3.726"	0.823 lb

nVent CADDY Wire Basket Tray Accessories

NVENT CADDY WIRE BASKET TRAY BLIND END

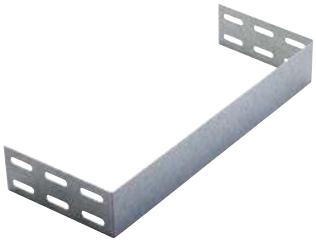

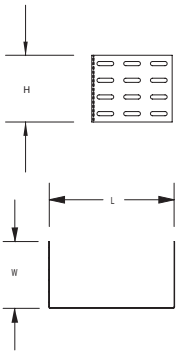

Features

- Designed to be used with the nVent CADDY Wire Basket Tray Splice Kit
- Multiple color options to coordinate with cable tray selection
- Builds stability and creates an aesthetically clean end of tray

Material: Steel
Finish: Pregalvanized

Part Number	Height H	Width W	Length L	Unit Weight
WBTBE6X8	6"	8"	8.703"	1 lb
WBTBE4X8	4"	8"	8.703"	1 lb
WBTBE4X6	4"	6"	6.703"	1 lb
WBTBE4X4	4"	4"	4.703"	1 lb
WBTBE2X8	2"	8"	8.703"	1 lb
WBTBE2X6	2"	6"	6.703"	1 lb
WBTBE2X4	2"	4"	4.703"	1 lb
WBTBE4X12	4"	12"	12.703"	2 lb
WBTBE6X12	6"	12"	12.703"	2 lb
WBTBE4X16	4"	16"	16.703"	2 lb
WBTBE6X16	6"	16"	16.703"	2 lb
WBTBE2X16	2"	16"	16.703"	2 lb
WBTBE2X12	2"	12"	12.703"	2 lb
WBTBE4X20	4"	20"	20.703"	3 lb
WBTBE6X18	6"	18"	18.703"	3 lb
WBTBE6X24	6"	24"	24.703"	3 lb
WBTBE2X24	2"	24"	24.703"	3 lb
WBTBE2X20	2"	20"	20.703"	3 lb
WBTBE4X24	4"	24"	24.703"	3 lb
WBTBE2X18	2"	18"	18.703"	3 lb
WBTBE6X20	6"	20"	20.703"	3 lb
WBTBE4X18	4"	18"	18.703"	3 lb

nVent CADDY Wire Basket Tray Accessories

NVENT CADDY WIRE BASKET TRAY POLYMER INSERT

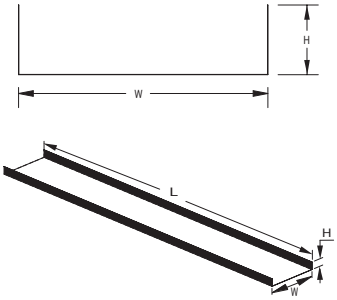

Features

- Standard black finish for use with divider posts
- Polymer insert rolls into the tray bottom
- Multiple color options to coordinate with cable tray selection

Material: Polymer
Color: Black

Part Number	Height H	Width W	Length L	Sides Included	Unit Weight
WBTFORM04BA		3.63"	120"	No	0.009 lb
WBTFORM06BA		5.63"	120"	No	0.014 lb
WBTFORM08BA		7.63"	120"	No	0.018 lb
WBTFORM2X4BA	2"	3.63"	120"	Yes	0.018 lb
WBTFORM2X6BA	2"	5.63"	120"	Yes	0.023 lb
WBTFORM12BA		11.63"	120"	No	0.027 lb
WBTFORM4X4BA	4"	3.63"	120"	Yes	0.027 lb
WBTFORM2X8BA	2"	7.63"	120"	Yes	0.027 lb
WBTFORM4X6BA	4"	5.63"	120"	Yes	0.032 lb
WBTFORM16BA		15.63"	120"	No	0.036 lb
WBTFORM2X12BA	2"	11.63"	120"	Yes	0.036 lb
WBTFORM4X8BA	4"	7.63"	120"	Yes	0.036 lb
WBTFORM18BA		17.63"	120"	No	0.041 lb
WBTFORM2X16BA	2"	15.63"	120"	Yes	0.045 lb
WBTFORM20BA		19.63"	120"	No	0.045 lb
WBTFORM4X12BA	4"	11.63"	120"	Yes	0.045 lb
WBTFORM6X8BA	6"	7.63"	120"	Yes	0.045 lb
WBTFORM2X18BA	2"	17.63"	120"	Yes	0.05 lb
WBTFORM2X20BA	2"	19.63"	120"	Yes	0.054 lb
WBTFORM6X12BA	6"	11.63"	120"	Yes	0.054 lb
WBTFORM24BA		23.63"	120"	No	0.054 lb
WBTFORM4X16BA	4"	15.63"	120"	Yes	0.054 lb
WBTFORM4X18BA	4"	17.63"	120"	Yes	0.059 lb
WBTFORM2X24BA	2"	23.63"	120"	Yes	0.064 lb
WBTFORM4X20BA	4"	19.63"	120"	Yes	0.064 lb
WBTFORM6X16BA	6"	15.63"	120"	Yes	0.064 lb
WBTFORM6X18BA	6"	17.63"	120"	Yes	0.073 lb
WBTFORM4X24BA	4"	23.63"	120"	Yes	0.073 lb
WBTFORM6X20BA	6"	19.63"	120"	Yes	0.082 lb
WBTFORM6X24BA	6"	23.63"	120"	Yes	0.082 lb

nVent CADDY Wire Basket Tray Accessories

NVENT CADDY WIRE BASKET TRAY POLYMER INSERT, PERFORATED

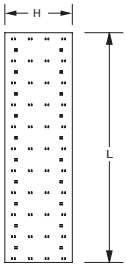

Features

- Polymer insert rolls easily into the tray bottom
- Designed for commercial and data center applications
- Can be easily configured while in the field
- Multiple color options to coordinate with cable tray selection

Color: Black
Sides Included: No
Material: Polyvinylchloride
Complies with: UL® 94V-0

Catalog Number	Height H	Width W	Length L	Unit Weight
WBTPERFPOLY8	0.018"	8"	1200.78"	5.95 lb
WBTPERFPOLY18	0.018"	18"	1200.78"	14.33 lb
WBTPERFPOLY24	0.018"	24"	1200.78"	17.417 lb

NVENT CADDY WIRE BASKET TRAY VERTICAL DOWN

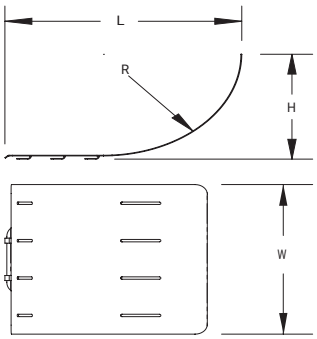

Features

- Designed to be used with the nVent CADDY Wire Basket Tray Splice Kit
- Ensures the natural bend radius of the cable is protected
- Provides optimal support for high-performance data cable, up to and including fiber optic, Cat 5e, Cat 6, Cat 6A, and Cat 7

Material: Steel
Finish: Electrogalvanized

Part Number	Color	Height H	Width W	Length L	Radius R	Unit Weight
WBTVERTDWNWH	White	2.598"	6.772"	7.874"	2.54"	1.852 lb
WBTVERTDWNBA	Black	2.598"	6.772"	7.874"	2.54"	1.852 lb
WBTVERTDWN	–	2.598"	6.772"	7.874"	2.54"	1.852 lb

nVent CADDY Wire Basket Tray Accessories

NVENT CADDY WIRE BASKET TRAY DROP OUT

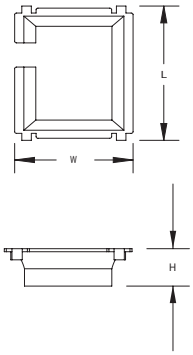

Material: Steel
Finish: Pregalvanized

Features

- Designed for center cable tray dropouts
- Conducive to creating both multi-tier tray and side-by-side assemblies
- Easily cut to fit around the wire basket tray for retrograde cable installations
- Ensures the natural bend radius of the cable is protected
- Stackable for multiple adjoining dropouts
- Reusable and tool-free—easy-to-install, easy-to-remove

Part Number	Height H	Width W	Length L	Unit Weight
WBTCBLDO4	1.126"	4.3"	3-5/8"	0.022 lb
WBTCBLDO6	1.157"	6.22"	8.301"	0.044 lb
WBTCBLDO	1.126"	2.313"	3.563"	0.11 lb

NVENT CADDY WIRE BASKET TRAY LABEL CLIP

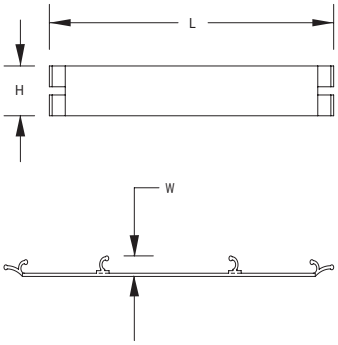

Features

- Reusable and tool-free—easy-to-install, easy-to-remove
- Translucent white color allows for different label colors to be attached and aids in the identification and organization of the pathway application

Part Number	Material	Height H	Width W	Length L	Unit Weight
WBTLBLCLP	ABS, UL-VO rated	1-5/8"	0.48"	10.414"	0.05 lb

nVent CADDY Wire Basket Tray Accessories

NVENT CADDY WIRE BASKET TRAY SIDE CAR

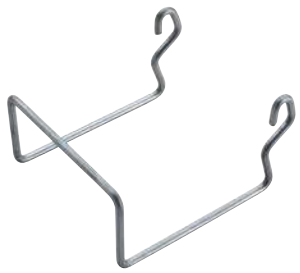

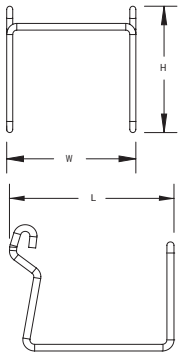

Features

- Reusable and tool-free—easy-to-install, easy-to-remove
- Ideal for installations where non-continuous support is possible
- Retrofit option when running new low-voltage cables

Material: Steel
Finish: Pregalvanized

Part Number	Color	Height H	Width W	Length L	Unit Weight
WBTSIDECARBA	Black	2.55"	4"	4.359"	0.15 lb
WBTSIDECAR	–	2.55"	4"	4.359"	0.15 lb
WBTSIDECAR46	–	3.54"	4"	4.359"	0.2 lb

NVENT CADDY WIRE BASKET TRAY VERTICAL UP

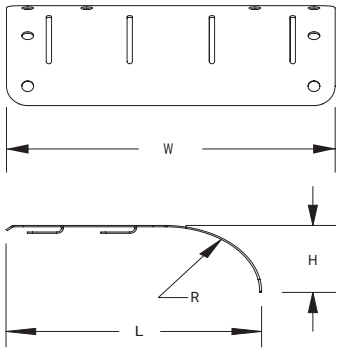

Features

- Ideal for underfloor retrofit applications
- Reusable and tool-free—easy-to-install, easy-to-remove
- Eliminates the need to cut or configure cable tray
- Ensures the natural bend radius of the cable is protected

Material: Steel
Finish: Electrogalvanized

Part Number	Height H	Width W	Length L	Radius R	Unit Weight
WBTVERTUP	8.56"	7.752"	13.72"	7.948"	1.612 lb

NVENT CADDY WIRE BASKET TRAY CUTTING TOOL

Features

- Designed to cut wire basket tray up to 8 mm (0.315 in) in diameter
- Lightweight tooling is easy-to-use
- Versatile solution made for both on-site and in-shop use
- Blades of the tool are hardened for increased longevity

Material: Steel

Part Number	Height	Width	Length	Unit Weight
WBTCUTTOOL	1.57"	6.89"	25"	5.7 lb

nVent CADDY Wire Basket Tray Accessories

NVENT CADDY WIRE BASKET TRAY DIVIDER POST

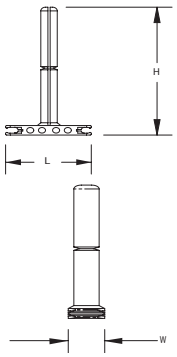

Features

- Separates high-performance cable within a single cable tray
- Multiple color options to coordinate with cable tray selection
- Four-inch full height, can be snapped in half to create two-inch tall dividers for low-volume cable runs

Material: Steel
Finish: Pregalvanized

Part Number	Color	Height H	Width W	Length L	Unit Weight
WBTDIVPOSTWH	White	4.331"	2.283"	0.626"	0.006 lb
WBTDIVPOSTBA	Black	4.331"	2.283"	0.626"	0.006 lb

NVENT CADDY WIRE BASKET TRAY BOX SUPPORT

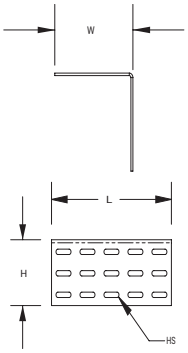

Features

- Designed to be used with the nVent CADDY Wire Basket Tray Splice Kit and nVent CADDY Wire Basket Tray Washer Support
- Multiple color options to coordinate with cable tray selection

Material: Steel

Part Number	Finish	Color	Height H	Width W	Length L	Hole Size HS	Unit Weight
WBTBOXSPRTBA	Painted	Black	3.061"	3.061"	8"	1/4"	0.86 lb
WBTBOXSPRT	Pregalvanized	–	3.061"	3.061"	8"	1/4"	0.86 lb
WBTBOXSPRTWH	Painted	White	3.061"	3.061"	8"	1/4"	0.86 lb

nVent CADDY Wire Basket Tray Accessories

NVENT CADDY WIRE BASKET TRAY CONDUIT SUPPORT

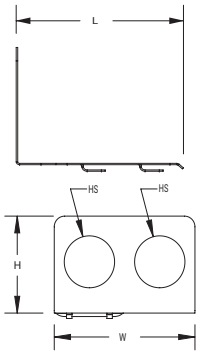

Features

- Utilize with nVent CADDY Wire Basket Tray Splice Kit or nVent CADDY Wire Basket Tray Washer Support for added support
- Reusable and tool-free—easy-to-install, easy-to-remove
- Hole configurations include: 3/4 in, 1 in, and 1-1/2 in, or all holes can be configured to the same size

Material: Steel
Finish: Electrogalvanized

Part Number	Height H	Width W	Length L	Hole Size HS	Unit Weight
WBT2CA20	3.492"	7"	5.49"	1.688"	0.551 lb

NVENT CADDY WIRE BASKET TRAY WATERFALL

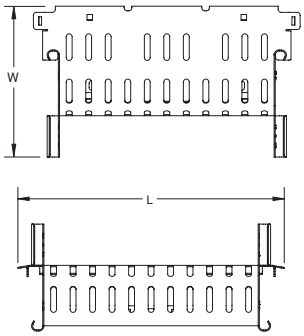

Features

- Equipped with tie-down openings to facilitate bundled cable options
- Powder coating protects against scratches or cable damage
- Maintains a 120-degree bend, adhering to TIA-approved radius standards for all cable types
- Standard finishes include black powder and electro-galvanized (zinc) coatings, with customization options for other colors upon request
- Provides optimal support for high-performance data cable, up to and including fiber optic, Cat 5e, Cat 6, Cat 6A, and Cat 7

Material: Steel

Part Number	Color	Finish	Length L	Height H	Width W	Unit Weight
WBTWTRFALL20BA	Black	Electrogalvanized	21-1/2"	5.47"	7.72"	3.85 lb
WBTWTRFALL12BA	Black	Powder Coated	13.66"	5.47"	7.72"	2.64 lb
WBTWTRFALL12EG	Gray	Electrogalvanized	13.66"	5.47"	7.72"	2.64 lb
WBTWTRFALL20EG	Gray	Electrogalvanized	21-1/2"	5.47"	7.72"	3.85 lb

nVent CADDY Wire Basket Tray Accessories

NVENT CADDY WIRE BASKET TRAY WATERFALL, VERTICAL

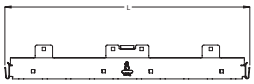

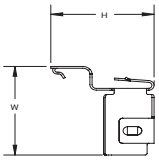

Features

- Quickly attaches to the nVent CADDY Wire Basket Tray Waterfall
- Supports vertical tray widths of 12 or 20 in
- Safety conceals cable tray cut edges and burrs
- Multiple finishes available to achieve an aesthetically seamless look

Material: Steel

Part Number	Finish	Color	Length L	Width W	Height H
WBTWTRVTB12EG	Electrogalvanized	Gray	12.42"	2.8"	2.83"
WBTWTRVTB20EG	Electrogalvanized	Gray	20.38"	2.8"	2.83"
WBTWTRVTB12BA	Pregalvanized	Black	12.42"	2.8"	2.83"
WBTWTRVTB20BA	Pregalvanized	Black	20.38"	2.8"	2.83"

nVent CADDY
WORKING SMARTER

Innovative, time-saving products designed to help you work safer, more efficiently and with greater success.

nVent.com

Our powerful portfolio of brands:

CADDY ERICO HOFFMAN ILSCO SCHROFF TRACHTE

©2026 nVent. All nVent marks and logos are owned or licensed by nVent Services GmbH or its affiliates. All other trademarks are the property of their respective owners. nVent reserves the right to change specifications without notice.

nVentCADDY-SB-N1706000-WBTSalesBrochure-USEN-2603