369791d 1 01.09.18

# Energi Savr Node for 0–10 V⎓
# Energi Savr Node with Softswitch

The Energi Savr Node (ESN) family is a group of modular products for the control of lighting, receptacles, and other loads. This document describes the following products:

- Energi Savr Node for 0–10 V⎓ (models QSN-4T20-S, QSN-4T16-S-347)
- Energi Savr Node with Softswitch (models QSN-4S20-S, QSN-4S16-S-347)

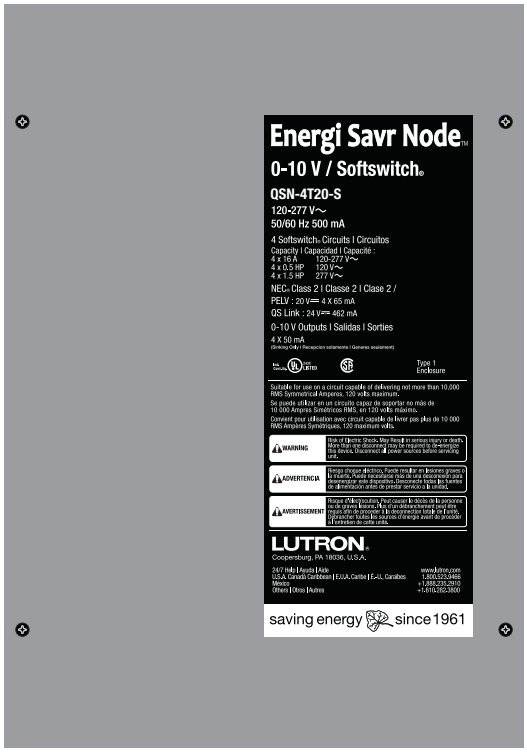


## Features

- Rated to switch 20 A receptacles with any output.
- Default configuration requires no commissioning.
- Program using integral interface on the ESN unit.
- Four occupancy sensor inputs for automated control of loads in 4 zones.
- Four daylight sensor inputs automatically adjust light levels based on the amount of natural light entering through the windows.
- Four IR receiver inputs for personal control.
- Four inputs for IEC PELV/NEC® Class 2 dry-contact switches.
- Includes QS control link for seamless integration of loads, control stations, and QS sensor modules.
- Patented Softswitch circuit eliminates arcing at mechanical contacts when loads are switched, prolonging relay life to an average of 1,000,000 cycles at 16 A.
- Contact Lutron for compatibility with a Quantum system.

## System Example

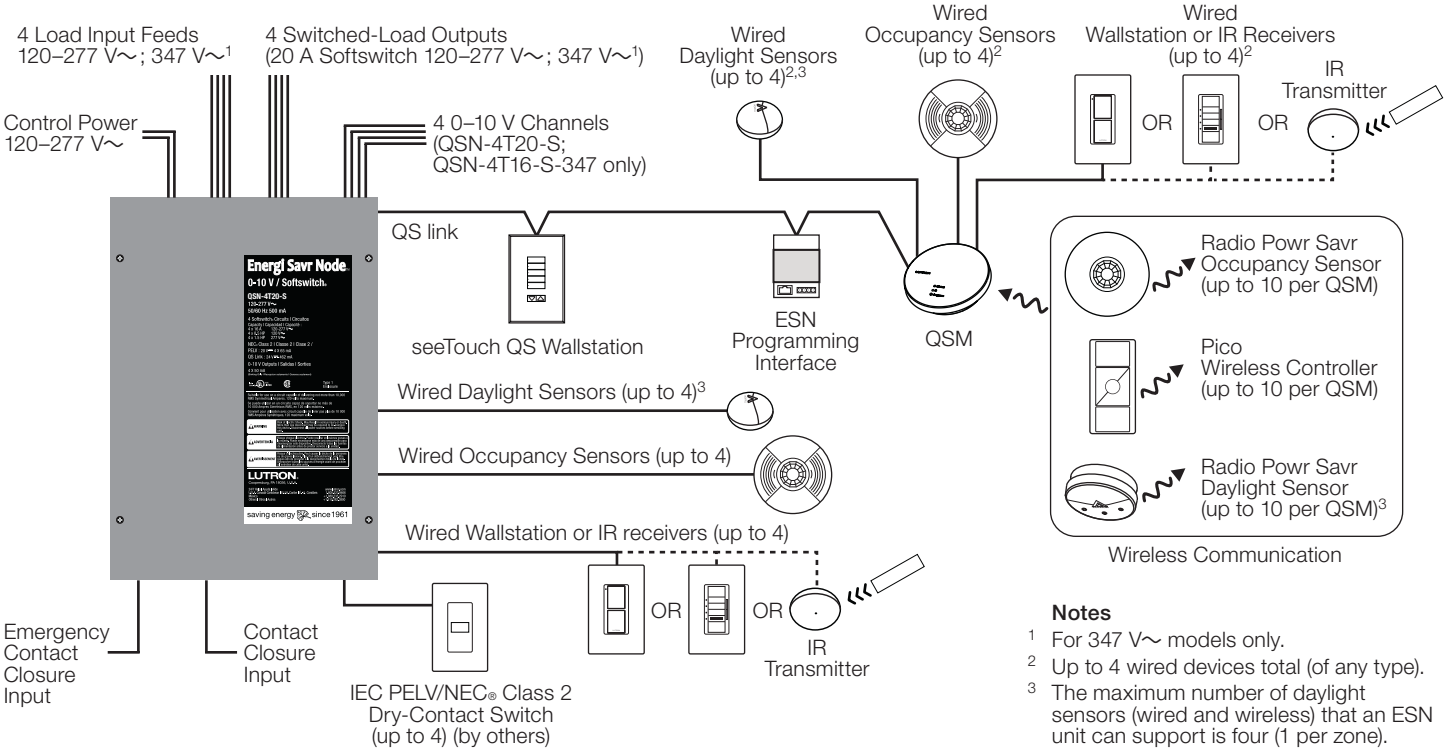


**Notes**

1 For 347 V~ models only.
2 Up to 4 wired devices total (of any type).
3 The maximum number of daylight sensors (wired and wireless) that an ESN unit can support is four (1 per zone).



| Job Name: | Model Numbers: | |
|---|---|---|
| | | |
| Job Number: | | |

# Specifications

### Regulatory Approvals

- UL® Listed
- CSA
- NOM
- Lutron Quality Systems registered to ISO 9001:2015
- Complies with requirements for use in other spaces used for environmental air (plenums) per NEC® 2014 300.22(C)(3)
- Meets the Canadian National Building Code plenum requirements for a concealed space used as a plenum within a floor or roof assembly
- For commercial use, Class A only

### Power

- Control Power: 120 V∼; 220–240 V∼; 277 V∼ 50/60 Hz
- Lightning strike protection meets ANSI/IEEE standard 62.41-1991. Can withstand voltage surges of up to 6000 V∼ and current surges of up to 3000 A
- Current draw: 0.5 A max
- 10-year power failure memory: restores lighting to levels prior to power interruption
- Latching relays keep previously illuminated zones on when control power feed is lost

### Environment

- Ambient Temperature Operating Range: 32 °F to 104 °F (0 °C to 40 °C)
- Relative humidity: less than 90% non-condensing
- For indoor use only
- Thermal dissipation: 40 BTU/hr

### Terminal Wiring

- Control Power Wiring: 14 AWG to 12 AWG (2.5 $mm^2$ to 4.0 $mm^2$)
- Load Wiring: 14 AWG to 12 AWG (2.5 $mm^2$ to 4.0 $mm^2$)
- 0–10 V Wiring: 20 AWG to 12 AWG (0.5 $mm^2$ to 4.0 $mm^2$)
- Input Group Wiring: 20 AWG to 12 AWG (0.5 $mm^2$ to 4.0 $mm^2$); maximum wire run length to each input not to exceed 150 ft (46 m)
- QS Link Wiring: 22 AWG to 12 AWG (0.5 $mm^2$ to 4.0 $mm^2$)
- Contact Closure Wiring: 20 AWG to 12 AWG (0.5 $mm^2$ to 4.0 $mm^2$)

### Physical Design and Mounting

- NEMA Type 1, IP-20 protection
- Surface-mount

### Load Types (relay ratings)

- Rated to control 20 A receptacles with any output.
- When using the Energi Savr Node to control receptacles, it may be used with, but is not limited to, the following:
  - Monitors
  - Fans
  - Humidifiers
  - Printers

  **Note:** Refer to the manufacturer's guidelines for acceptable switching methods.
- When using the Energi Savr Node to control receptacles, it may NOT be suitable for use with devices that require any of the following:
  - Shut-down process before power is interrupted, such as computers.
  - Cool-down process before power is interrupted, such as projectors.
  - Programming, such as clocks or DVRs.
  - Long warm-up cycle.



| Job Name: | Model Numbers: | |
|---|---|---|
| | | |
| Job Number: | | |

## Specifications (continued)

### Load Types (relay ratings) *(continued)*

- **Not for use** with loads that present a hazard if automatically energized (e.g., heaters).
- Any receptacles that are controlled by an automatic control device **must be marked** with "⏻" located on the controlled receptacle outlet where visible after installation as stated in 2014 NEC® Article 406.3(E).

| Load Type | Relay Ratings | |
|---|---|---|
| | **120–277 V∼** QSN-4S20-S QSN-4T20-S | **347 V∼** QSN-4S16-S-347 QSN-4T16-S-347 |
| Tungsten | 20 A | 16 A |
| AC General Use | 20 A | 16 A |
| Electric Discharge Lamp | 16 A | 16 A |
| Electric Ballast (NEMA 410) | 16 A | 16 A |
| Resistive | 20 A | 16 A |
| Inductive | 20 A | 16 A |
| Motor | 1.0 HP 120 V∼<br>2.0 HP 277 V∼ | — |

### Input Default Associations

| | Inputs/Outputs | Zone 1 | Zone 2 | Zone 3 | Zone 4 |
|---|---|---|---|---|---|
| Group 1 | Occ | X | | | |
| | Daylight | X | | | |
| | IR | X | | | |
| | Switch | X | | | |
| Group 2 | Occ | | X | | |
| | Daylight | | X | | |
| | IR | | X | | |
| | Switch | | X | | |
| Group 3 | Occ | | | X | |
| | Daylight | | | X | |
| | IR | | | X | |
| | Switch | | | X | |
| Group 4 | Occ | | | | X |
| | Daylight | | | | X |
| | IR | | | | X |
| | Switch | | | | X |
| | CCI | X | X | X | X |
| | Emergency CCI | X | X | X | X |

### Softswitch 120–277 V∼

- Softswitch relay is rated for 20 A continuous use per channel.
- Relay is mechanically held.

### 0–10 V⎓ Output Ratings (QSN-4T20-S)

- Each output sinks up to 50 mA maximum.
- Each output sinks current only (load device must provide 10 V⎓ supply).
- Provides an IEC PELV/NEC® Class 2 isolated 0–10 V output signal that conforms to IEC 60929.

### Occupancy Sensors

- Up to 16 occupancy sensors can be programmed to the Energi Savr Node device.
- Manual Programming: up to 4 occupancy sensors wired directly to the Energi Savr Node device, up to 4 occupancy sensors wired to a QS Sensor Module (QSM), and up to 10 wireless occupancy sensors through the same QSM; the total programmed to the Energi Savr Node device cannot exceed 16.
- HHD (*iPod/iPhone*) Programming: up to 16 occupancy sensors from any source (wired directly to the Energi Savr Node device, wired to any other Energi Savr Node device, or wired/wireless from any QSM on the QS link); the total programmed to the Energi Savr Node device cannot exceed 16.
- Use Lutron occupancy sensors to control one or more zones.
- Lutron occupancy sensors can be programmed to automatically turn on the lights and receptacles in an area when it becomes occupied and turn off the lights and receptacles in an area after it becomes vacant.
- For spaces that require vacancy mode operation for lights, a single occupancy sensor can control a zone of lights in vacancy mode and control a zone of receptacles in occupancy mode.

Apple, iPhone and iPod touch are trademarks of Apple Inc., registered in the U.S. and other countries.



| Job Name: | Model Numbers: | |
|---|---|---|
| | | |
| Job Number: | | |

## Specifications (continued)

### Occupancy Sensors *(continued)*

- Each of the four occupancy inputs can power one Lutron occupant sensor.
- Each area's occupied scene and unoccupied scene can be programmed independently.
- Occupancy sensor must provide a dry-contact closure or solid-state output.
- Additional occupancy sensors can be used with the Energi Savr Node device. Refer to the "Programming Options and Features" table for system rules.

### seeTouch QS Controls

- seeTouch QS wallstations can be configured to control ESN unit scenes or zones.
- In zone toggle mode, zone buttons can be assigned to one or more zones on any ESN unit connected to the QS Link.
- In scene mode, wallstations can be assigned to one or more ESN units connected to the QS Link.
- LED indicator displays zone or scene status.

Table 1: seeTouch QS Wallstation Configurations

| | # Buttons | | | | |
|---|---|---|---|---|---|
| **Wallstation Function** | 1 | 2 | 3 | 5 | 7 |
| Zone Toggle | ✓ | ✓ | ✓ | ✓ | ✓ |
| Scene | 1, Off (toggle) | 1, Off | 1, 2, Off | 1–4, Off | N/A |

### IR Wallstation or Receiver Input

- Four inputs for IR receivers or wallstations for control of lighting zones can be connected directly to the ESN unit
- Use Lutron Pico wired control or CC-4BRL-WH wallstation to control one or more zones.
- Use Lutron EC-DIR-WH or EC-IR-WH ceiling-mount sensors to control one or more zones.
- Up to four additional wired wallstations or IR receivers can be assigned when associated with a QSM.
- Associate additional QSMs and sensors/controls with ESN unit when programming with an *Apple iPod touch* or *iPhone*. Refer to "Programming Options" section for details.

### Daylight Sensors

- Lutron daylight sensors allow daylight harvesting with programmable effect on light output.
- Four daylight sensors can be connected directly to the ESN unit.
- Use Lutron EC-DIR-WH sensors to control one or more zones.
- Alternatively, up to 4 sensors (Lutron wired daylight sensors or Radio Powr Savr daylight sensors) can be assigned when associated with a QSM.
- The maximum number of Lutron daylight sensors (wired or wireless), either wired directly to the unit or indirectly (associated with a QSM) cannot exceed 4.
- Associate additional QSMs and sensors/controls with ESN unit when programming with an *Apple iPod touch* or *iPhone*. Refer to "Programming Options" section for details.

### Contact Closure Input (CCI)

- Activate scenes using momentary or maintained closures from an external device such as a timeclock.
- Start or stop Afterhours Mode using a maintained closure.
- The attached device must provide a dry-contact closure or solid-state output.
- Configurable for Normally-Open (NO) or Normally-Closed (NC) operation.
- Input is miswire-protected up to 36 V⎓.

Apple, iPhone and iPod touch are trademarks of Apple Inc., registered in the U.S. and other countries.



| Job Name: | Model Numbers: | |
|---|---|---|
| | | |
| Job Number: | | |

## Specifications (continued)

### Emergency Contact Closure Input

- By default, contact closure input from Lutron Emergency Lighting Interface (LUT-ELI-3PH), security, or fire alarm systems turns all zones on to full output when emergency state is detected.
- Emergency contact closure input is normally closed (NC). The ESN unit is shipped with a jumper pre-installed.
- Response of each zone is configurable.
- Attached devices, by default, will go to maximum output and ignore control inputs.
- No operations will be allowed until emergency signal is cleared.
- The attached device must provide a dry-contact closure or solid-state output.
- Input is miswire-protected up to 36 V⎓.
- Emergency CCI cannot control other ESN units.

### Functionality with GRAFIK Eye QS

- ESN unit follows GRAFIK Eye QS scene activations when associated with the GRAFIK Eye QS.
- ESN unit responds to commands initiated by the GRAFIK Eye QS astronomic time clock when associated with the GRAFIK Eye QS.
- ESN unit operates in afterhours mode when associated with a GRAFIK Eye QS that is in afterhours mode.

### Functionality with QSE-IO

- ESN unit responds to scene commands initiated by the QSE-IO if the QSE-IO DIP switches have been set to either scene selection mode, zone toggle mode, partition mode, or occupancy sensor mode.

### Functionality with QSE-CI-NWK-E

- Integrate ESN unit with touchscreens, PCs, A/V systems, or other digital systems and devices.
- Recall scenes and set/adjust zone levels.

### IEC PELV/NEC® Class 2 Dry-Contact Switches

- Four inputs for IEC PELV/NEC® Class 2 dry-contact switches can be assigned to turn on and off one or more zones.
- Configure for momentary or maintained operation.

### QS Link Limits

- Each ESN unit can provide up to 14 Power Draw Units (PDUs) for other QS devices. Refer to the QS Link Power Draw Unit specification submittal (Lutron P/N 369405) for more information concerning PDUs.
- The QS Link can have up to 100 devices and 100 zones.
- Each ESN unit counts as 1 device towards the 100 device limit.
- Each ESN unit counts as 4 zones towards the 100 zone limit.

### QSM (QS Sensor Module)

- Use the QSM to integrate Radio Powr Savr occupancy sensors, Radio Powr Savr daylight sensors, and Pico wireless controllers to control zones on the ESN unit.
- Associate 1 QSM per ESN unit with manual programming.
- Associate multiple QSMs per ESN unit with *Apple iPod touch* or *iPhone* programming (requires QSE-CI-AP-D and Wi-Fi router). See “Programming Options” for details.
- Assign up to 10 Radio Powr Savr occupancy sensors per ESN unit via QSM.
- Assign up to 4 Radio Powr Savr daylight sensors per ESN unit via QSM.
- Assign up to 10 Pico wireless controllers per ESN unit via QSM.
- The sensors and Pico wireless controllers associated with the QSM should be mounted within 60 ft (18 m) line of sight, or 30 ft (9 m) through walls, of the QSM.
- Wire and power up to 4 wired sensors per QSM
  - Daylight Sensors
  - Occupancy Sensors
  - Infrared (IR) Receivers or Wallstations
- Refer to QSM Specification Submittal for more information.

Apple, iPhone and iPod touch are trademarks of Apple Inc., registered in the U.S. and other countries.



| Job Name: | Model Numbers: | |
|---|---|---|
| | | |
| Job Number: | | |

# Programming Options

## Manual Programming

- Use buttons on the front of the ESN unit.
- Use manual programming in installations with only one ESN unit and with one QSM or fewer on the QS link.

## HHD Programming

- Requires ESN Programming Interface (QSE-CI-AP-D).
- Requires *Apple iPod touch* or *iPhone* mobile digital device.
- Use the intuitive programming application for the *Apple iPod touch* or *iPhone* to program systems with multiple ESN units and QSMs on the QS link.
- Wireless router required for programming with an *Apple iPod touch* or *iPhone* only.
- Wireless router may be removed for normal operation.
- Ethernet connection may be made via an ESN Programming Interface (QSE-CI-AP-D) or an ESN QS unit with integral Ethernet jack.
- Lutron recommends that an ESN Programming Interface (or ESN QS unit with Ethernet jack) be wired to an Ethernet jack in the space for ease of access and proximity to power for the wireless router.
- Works with any standard wireless router that supports multicast packets.
- *Apple iPod touch* or *iPhone* can program all ESN QS units connected to an ESN Programming Interface via the QS Link (except when part of a Quantum system).
- ESN app is required and is available from the *Apple iTunes Store* online marketplace.

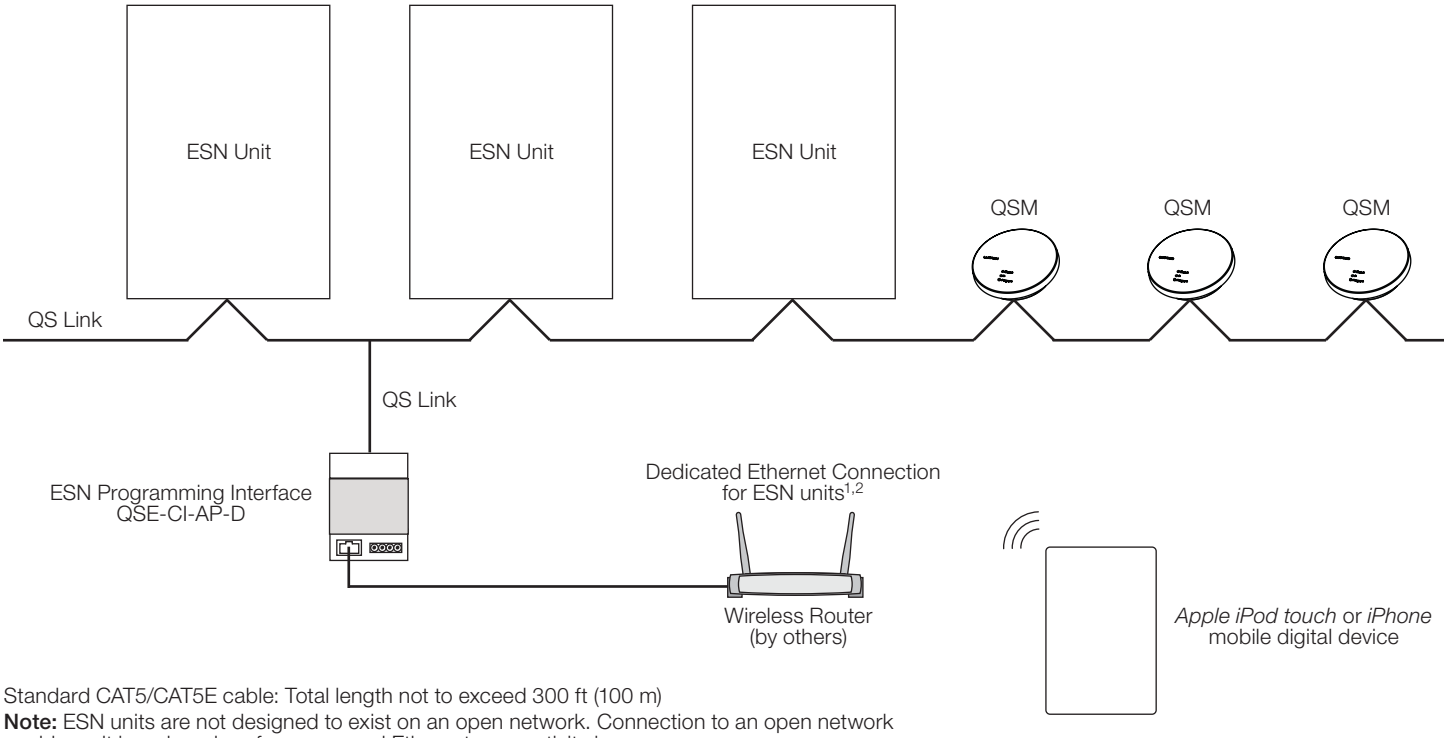


1 Standard CAT5/CAT5E cable: Total length not to exceed 300 ft (100 m)

2 **Note:** ESN units are not designed to exist on an open network. Connection to an open network could result in reduced performance and Ethernet connectivity issues.

Apple, iPhone, iPod touch, and iTunes Store are trademarks of Apple Inc., registered in the U.S. and other countries.



| Job Name: | Model Numbers: | |
|---|---|---|
| | | |
| Job Number: | | |

# Programming Options and Features

| | Manual Programming | HHD Programming<br>• Requires ESN Programming Interface QSE-CI-AP-D<br>• Requires *Apple iPod touch* or *iPhone* mobile digital device |
|---|---|---|
| ESN units connected to 1 QS Link | Not more than 1 | Multiple (100 QS devices and 100 zone limits apply) |
| QSMs connected to 1 QS link | Not more than 1 | Multiple (100 QS devices limit applies) |
| **Wired Occupancy Sensors** | | |
| System Limits | • 4 connected directly to ESN unit;<br>• Up to 4 wired to QSM | • Maximum of 16 occupancy sensors per ESN<br>• Up to 100 total occupancy sensors per QS link (wired and wireless) |
| Can be assigned to… | Any zone(s) on the ESN unit | Zones on ESN unit or share to other ESN units on same QS link |
| Occupancy Dependency Supported | No | Yes |
| **Wireless Occupancy Sensors** | | |
| System Limits | Associate 10 occupancy sensors to QSM to control zones on the ESN unit | • Maximum of 16 occupancy sensors per ESN<br>• Up to 100 total occupancy sensors per QS link (wired and wireless) |
| Can be assigned to… | Any zone(s) on the ESN unit | Zones on ESN unit or share to other ESN units on same QS link |
| Occupancy Dependency Supported | No | Yes |
| **Wired Daylight Sensors** | | |
| System Limits | Maximum of 1 daylight sensor per zone connected directly to the ESN unit or to the QSM | • Maximum of 2 daylight sensors per zone;<br>• Up to 100 total daylight sensors per QS link (wired and wireless) |
| Can be assigned to… | Any zone(s) on the ESN unit | Zones on ESN unit or share to other ESN units on same QS link |
| Disable daylighting in Scenes | No | Yes |
| **Wireless Daylight Sensors** | | |
| System Limits | • Maximum of 1 daylight sensor per zone;<br>• Associate wireless daylight sensors to the QSM | • Maximum of 2 daylight sensors per zone;<br>• Associate up to 10 wireless daylight sensors per QSM;<br>• Up to 100 total daylight sensors per QS link (wired and wireless) |
| Can be assigned to… | Any zone(s) on the ESN unit | Zones on ESN unit or share to other ESN units on same QS link |
| Disable daylighting in Scenes | No | Yes |
| **Pico Wireless Controllers** | | |
| System Limits | Associate 10 Pico wireless controllers to QSM to control zones on the ESN unit | Up to 100 total controls per QS link (wired wallstations, Pico wireless controllers, IR receivers) |
| Can be assigned to… | Any zone on the local ESN unit | Zones on ESN unit or share to other ESN units on same QS link |
| **IR Receivers and Wallstations** | | |
| System Limits | • 4 connect directly to the ESN unit;<br>• Up to 4 wired to the QSM | Up to 100 total controls per QS link (wired wallstations, Pico wireless controllers, IR receivers) |
| Can be assigned to… | Any zone on the local ESN unit | Zones on ESN unit or share to other ESN units on same QS link |

Apple, iPhone and iPod touch are trademarks of Apple Inc., registered in the U.S. and other countries.



| Job Name: | Model Numbers: | |
|---|---|---|
| | | |
| Job Number: | | |

## Programming Options and Features (continued)

| | Manual Programming | HHD Programming<br>• Requires ESN Programming Interface QSE-CI-AP-D<br>• Requires *Apple iPod touch* or *iPhone* mobile digital device |
|---|---|---|
| **NEC® Dry-Contact Switches Inputs** | | |
| Can be assigned to… | Any zone(s) on the connected ESN | Any zone(s) on the connected ESN |
| **Contact Closure Input** | | |
| Can be assigned to… | Any zone(s) on the ESN unit | Any or all local ESN unit zones |
| Functions | • Sweep to off<br>• Enable/disable afterhours<br>• Turn on to preset and turn off | • Sweep to off<br>• Enable/disable afterhours<br>• Turn on to preset and turn off<br>• Load shed |
| Afterhours Configuration | • Afterhours timeout: 15 minutes<br>• Blink-warn timeout: 5 minutes | Afterhours timeout and blink-warn timeouts are configurable |
| **Emergency Contact Closure Input** | | |
| Can be assigned to… | Any zone(s) on the ESN unit | Any or all local ESN zones |
| Emergency Light level | Configurable | Configurable |
| **seeTouch QS wallstations** | | |
| Scene Keypads assigned to… | Any zone(s) on the ESN unit | Any zone(s) on one or more ESN units on the QS link |
| Scene + Off Keypads assigned to… | Any zone(s) on the ESN unit | Any zone(s) on one or more ESN units on the QS link |
| Zone toggle keypad buttons assigned to… | Any zone(s) on the ESN unit | Any zone(s) on on or more ESN units on the link |
| Change Keypad to Scene or Zone | Yes | Yes |
| Changing keypads to shade, panic, fine tune | No | Yes |
| **Zone Configuration Parameters** | | |
| Load type | 0–10, 10–0, or switched | 0–10, 10–0, or switched |
| High-end trim | Adjustable | Adjustable |
| Low-end trim | Adjustable | Adjustable |
| Absolute minimum level | Adjustable | Adjustable |
| **Scenes** | | |
| Available scenes | Scenes 1–16 + Off | Scenes 1–16 + Off |
| GRAFIK Eye QS | Share scenes, timeclock events, afterhours events, or remote zone mapping to ESN units on QS Link | Share scenes, timeclock events, afterhours events, or remote zone mapping to ESN units on QS Link |
| QSE-IO | Scene, zone toggle, occupancy | Scene, zone toggle, occupancy |
| QSE-CI-NWK-E | Yes | Yes |

Apple, iPhone and iPod touch are trademarks of Apple Inc., registered in the U.S. and other countries.



| Job Name: | Model Numbers: | |
|---|---|---|
| | | |
| Job Number: | | |

# Mechanical Dimensions

All dimensions shown as in (mm)

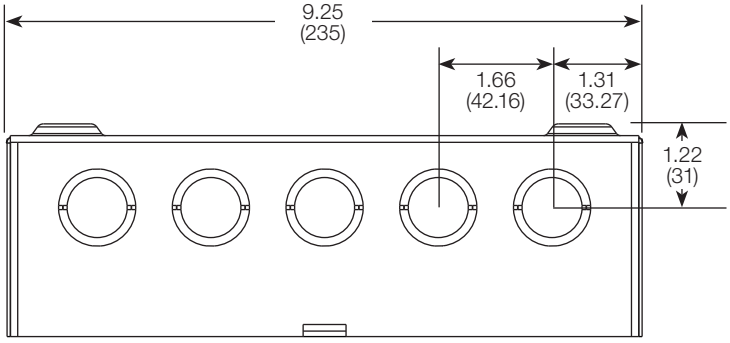


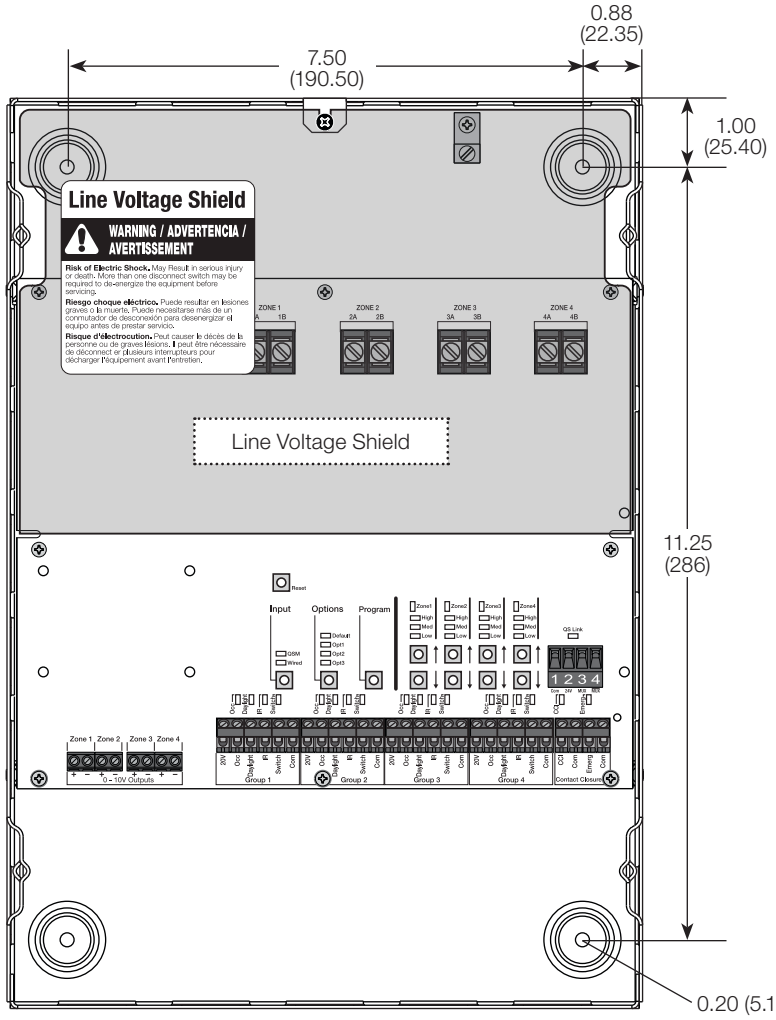


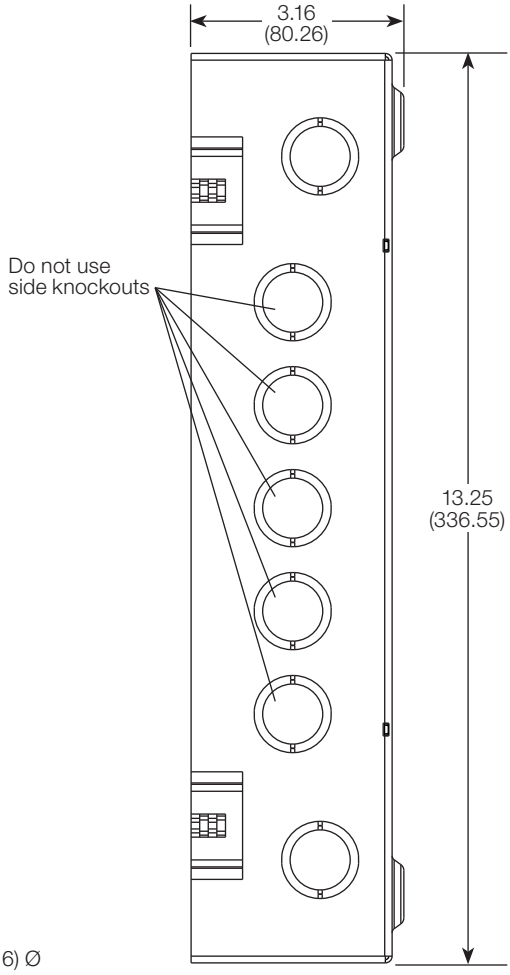




| Job Name: | Model Numbers: | |
|---|---|---|
| | | |
| Job Number: | | |

# Wiring: QS Link

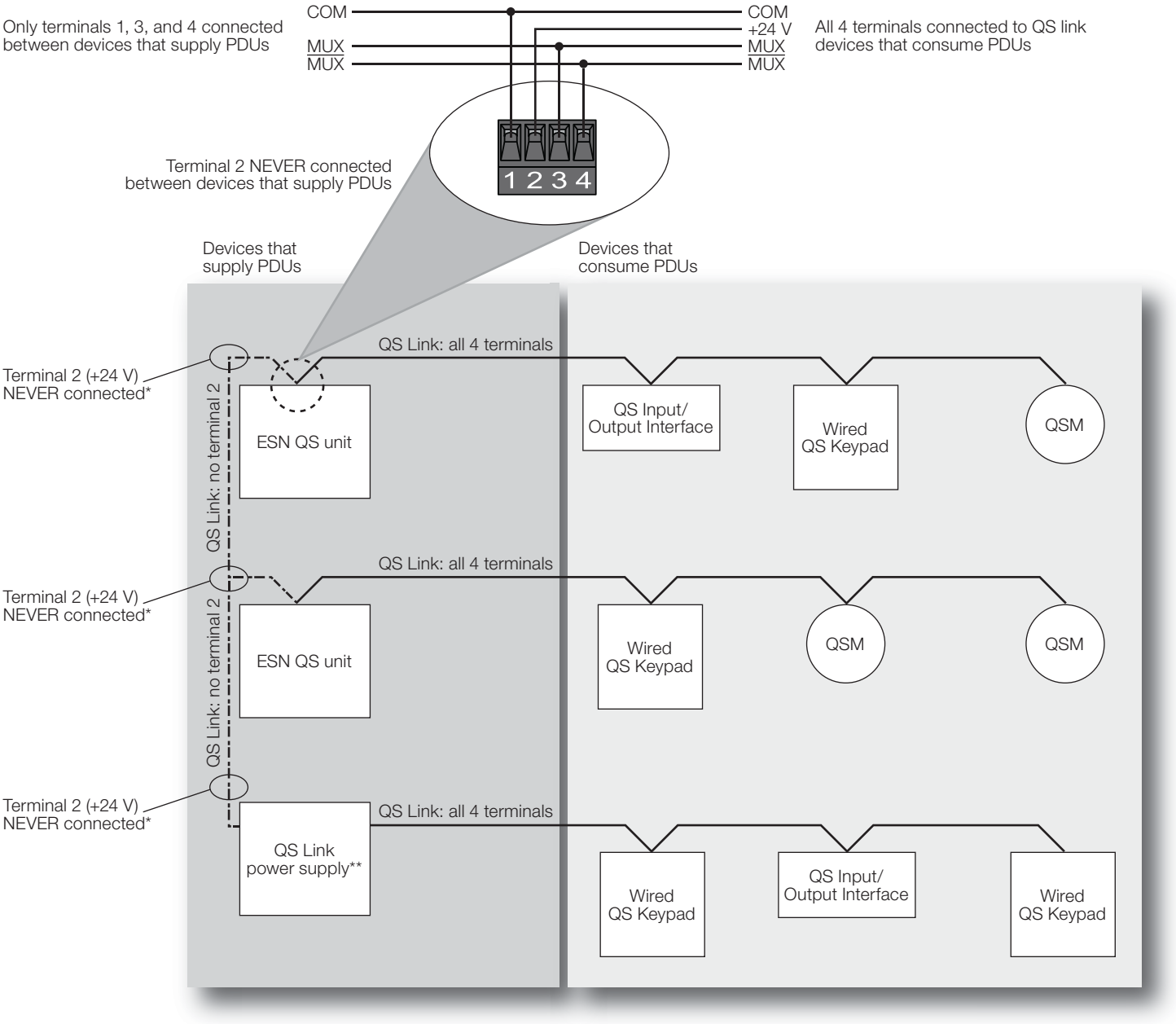


**QS Link Wiring Rules**

* Terminal 2 (+24 V) should NEVER be connected between devices that supply PDUs.

** For QS Link power supply wiring connection details, refer to the installation instructions for the specific power supply model being used.



| Job Name: | Model Numbers: | |
|---|---|---|
| | | |
| Job Number: | | |

# Wiring: IEC PELV/NEC® Class 2 Inputs

### Input Group Wiring

- 20 to 12 AWG (0.5 to 4.0 mm²)
- Strip length: 1/4 in (6 mm)
- Torque: 5 in-lb (0.5 N•m)

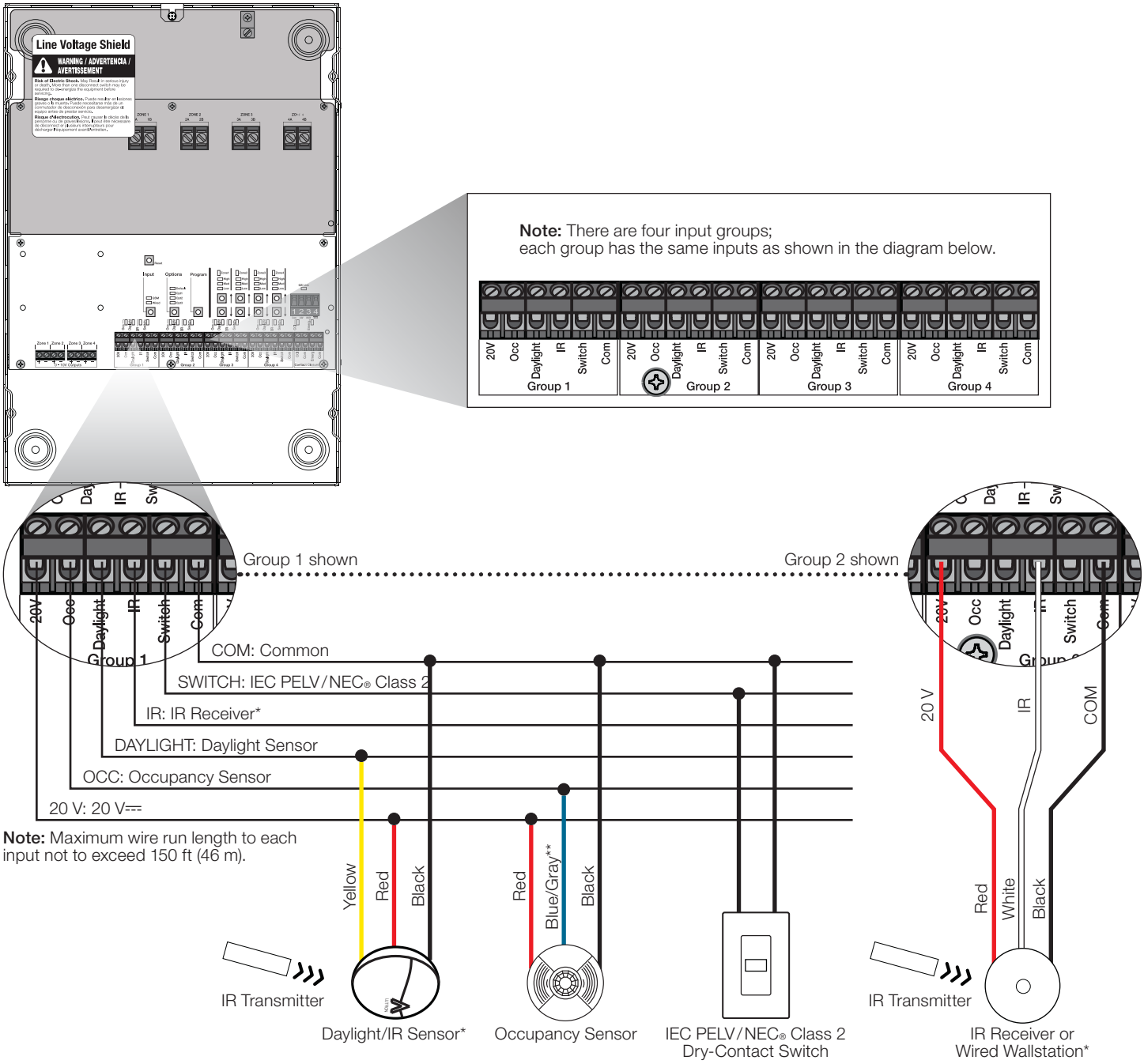


* **Note:** Only one IR device may be connected per input. If the IR signal from a daylight sensor is connected, a wall control may not be connected to the same input, and vice-versa.

** Connect the gray wire on -R model occupancy sensors.



| Job Name: | Model Numbers: | |
|---|---|---|
| | | |
| Job Number: | | |

# Wiring: Contact Closure Inputs (CCI and Emerg)

### Contact Closure Wiring

- 20 to 12 AWG (0.5 to 4.0 mm$^2$)
- Strip length: 1/4 in (6 mm)
- Torque: 5 in-lb (0.5 N•m)

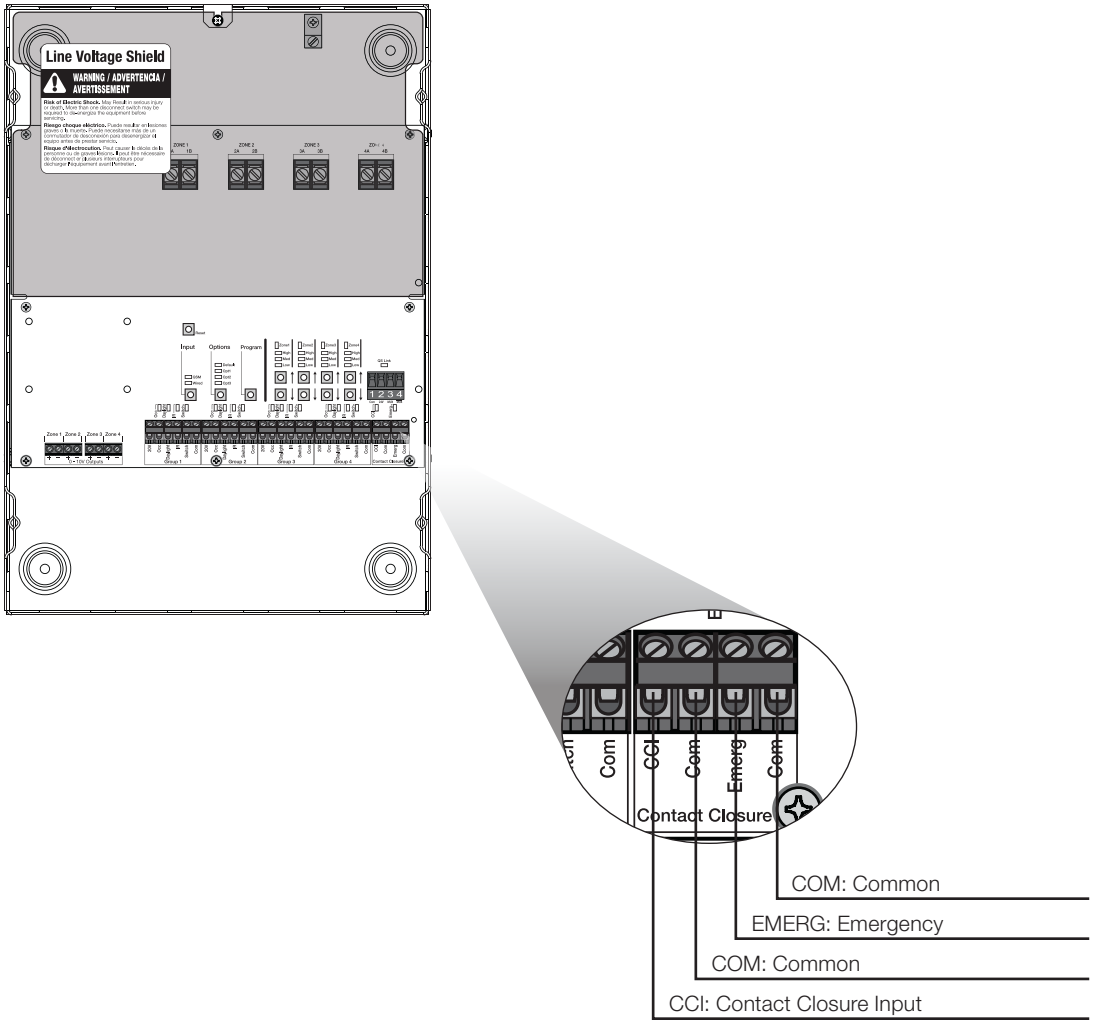




| Job Name: | Model Numbers: | |
|---|---|---|
| | | |
| Job Number: | | |

# Wiring: 4 Circuits, Multiple Feeds

**Load Wiring**

- Two (2) 14 to 12 AWG (2.5 to 4.0 mm²)
- Strip length: 3/8 in (8.5 mm)
- Torque: 7 in-lb (0.79 N•m)

**Attention Installer**

Any receptacles that are controlled by an automatic control device must be marked with "⏻" located on the controlled receptacle outlet where visible after installation as stated in 2014 NEC® Article 406.3(E).

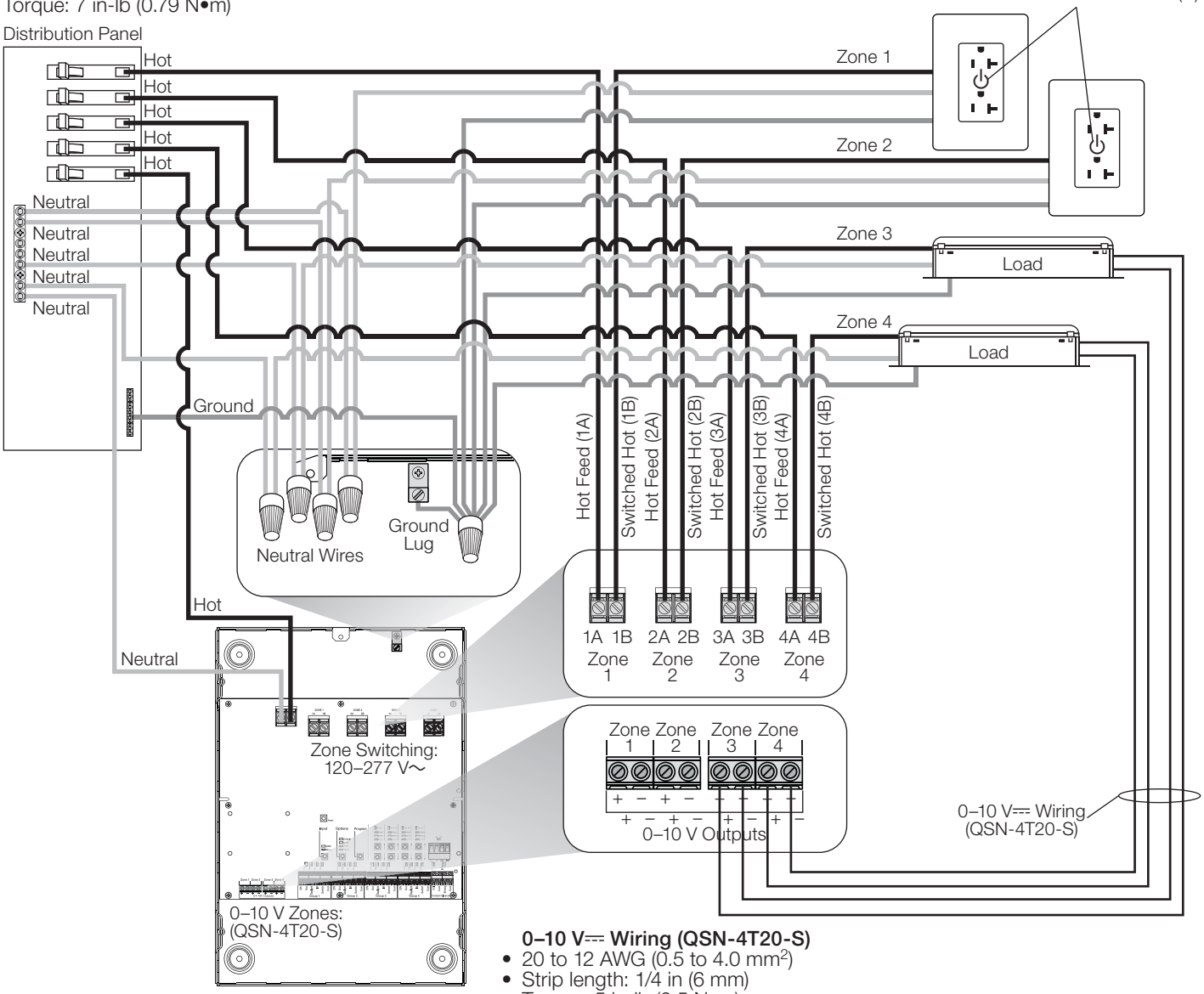


**0–10 V⎓ Wiring (QSN-4T20-S)**

- 20 to 12 AWG (0.5 to 4.0 mm²)
- Strip length: 1/4 in (6 mm)
- Torque: 5 in-lb (0.5 N•m)
- Connect only IEC PELV/NEC® Class 2 circuits or connect only non-IEC PELV/NEC® Class 2 circuits to 0–10 V zones 1–4.
- 0–10 V zones 1–4 are not isolated from each other.
- Negative (–) terminals are not internally connected to each other; both positive (+) and negative (–) connections must be made.
- Follow all national and local codes for separation requirements.

**WARNING. Entrapment/Fire Hazard.** To avoid the risk of entrapment, serious injury, or death, these controls must not be used to control equipment which is not visible from every control location or which could create hazardous situations such as entrapment if operated accidentally. Examples of such equipment which must not be operated by these controls include (but are not limited to) motorized gates, industrial doors, space heaters, etc. It is the installer's responsibility to ensure that the equipment being controlled is visible from every control location and that only suitable equipment is connected to these controls. Failure to do so could result in serious injury or death.



| Job Name: | Model Numbers: |
|---|---|
| Job Number: | |

# Wiring: 4 Circuits, Multiple Feeds, 120 V∼ Receptacles and 347 V∼ Lighting

**Load Wiring**
- Two (2) 14 to 12 AWG (2.5 to 4.0 mm²)
- Strip length: 3/8 in (8.5 mm)
- Torque: 7 in-lb (0.79 N•m)

**Attention Installer**
Any receptacles that are controlled by an automatic control device must be marked with "⏻" located on the controlled receptacle outlet where visible after installation as stated in 2014 NEC® Article 406.3(E).

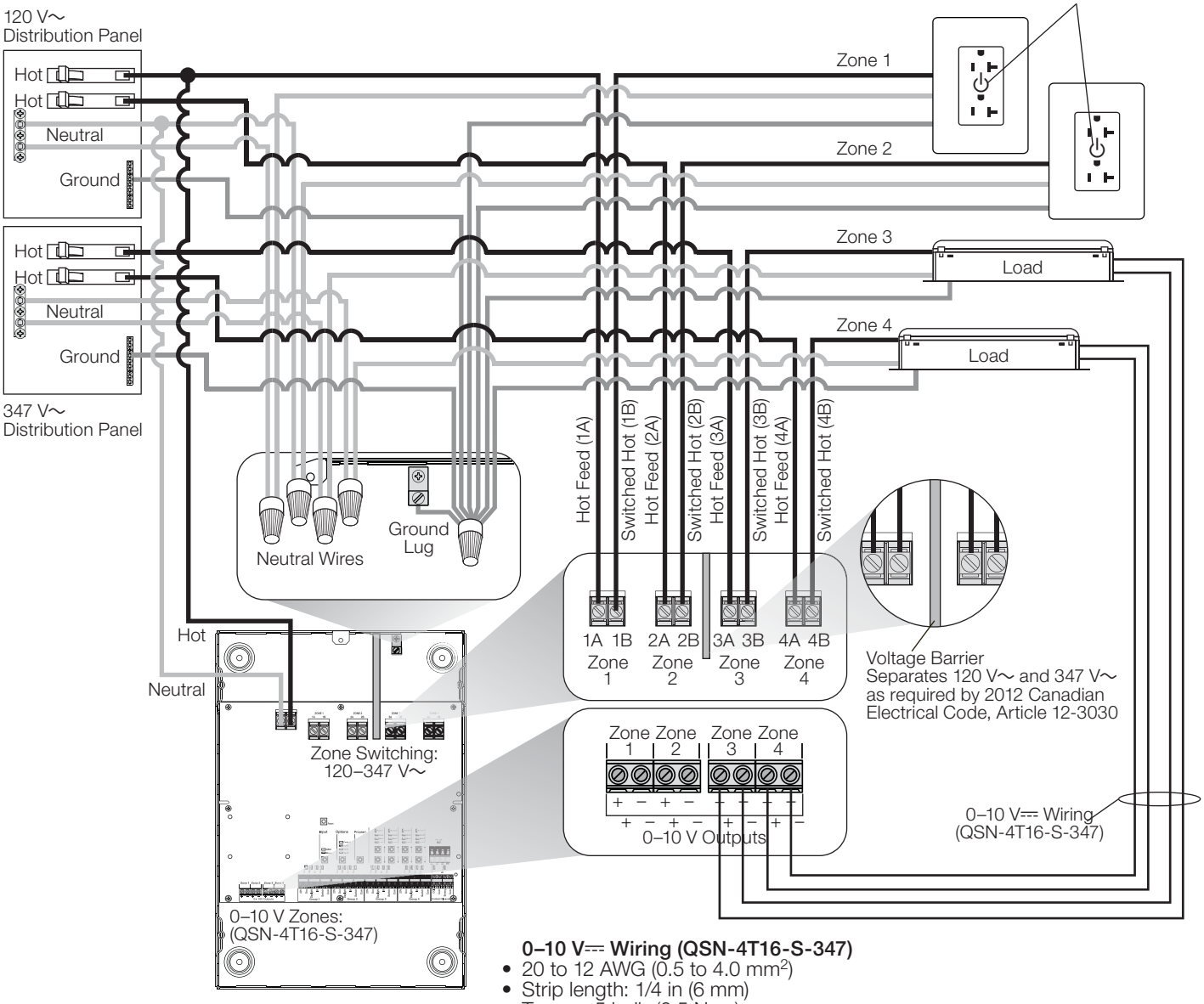


**0–10 V⎓ Wiring (QSN-4T16-S-347)**
- 20 to 12 AWG (0.5 to 4.0 mm²)
- Strip length: 1/4 in (6 mm)
- Torque: 5 in-lb (0.5 N•m)
- Connect only IEC PELV/NEC® Class 2 circuits or connect only non-IEC PELV/NEC® Class 2 circuits to 0–10 V zones 1–4.
- 0–10 V zones 1–4 are not isolated from each other.
- Negative (–) terminals are not internally connected to each other; both positive (+) and negative (–) connections must be made.
- Follow all national and local codes for separation requirements.

**WARNING. Entrapment/Fire Hazard.** To avoid the risk of entrapment, serious injury, or death, these controls must not be used to control equipment which is not visible from every control location or which could create hazardous situations such as entrapment if operated accidentally. Examples of such equipment which must not be operated by these controls include (but are not limited to) motorized gates, industrial doors, space heaters, etc. It is the installer's responsibility to ensure that the equipment being controlled is visible from every control location and that only suitable equipment is connected to these controls. Failure to do so could result in serious injury or death.



| Job Name: | Model Numbers: | |
|---|---|---|
| | | |
| Job Number: | | |

# Wiring: 4 Circuits, Single Feed

**Load Wiring**

- Two (2) 14 to 12 AWG (2.5 to 4.0 mm²)
- Strip length: 3/8 in (8.5 mm)
- Torque: 7 in-lb (0.79 N•m)

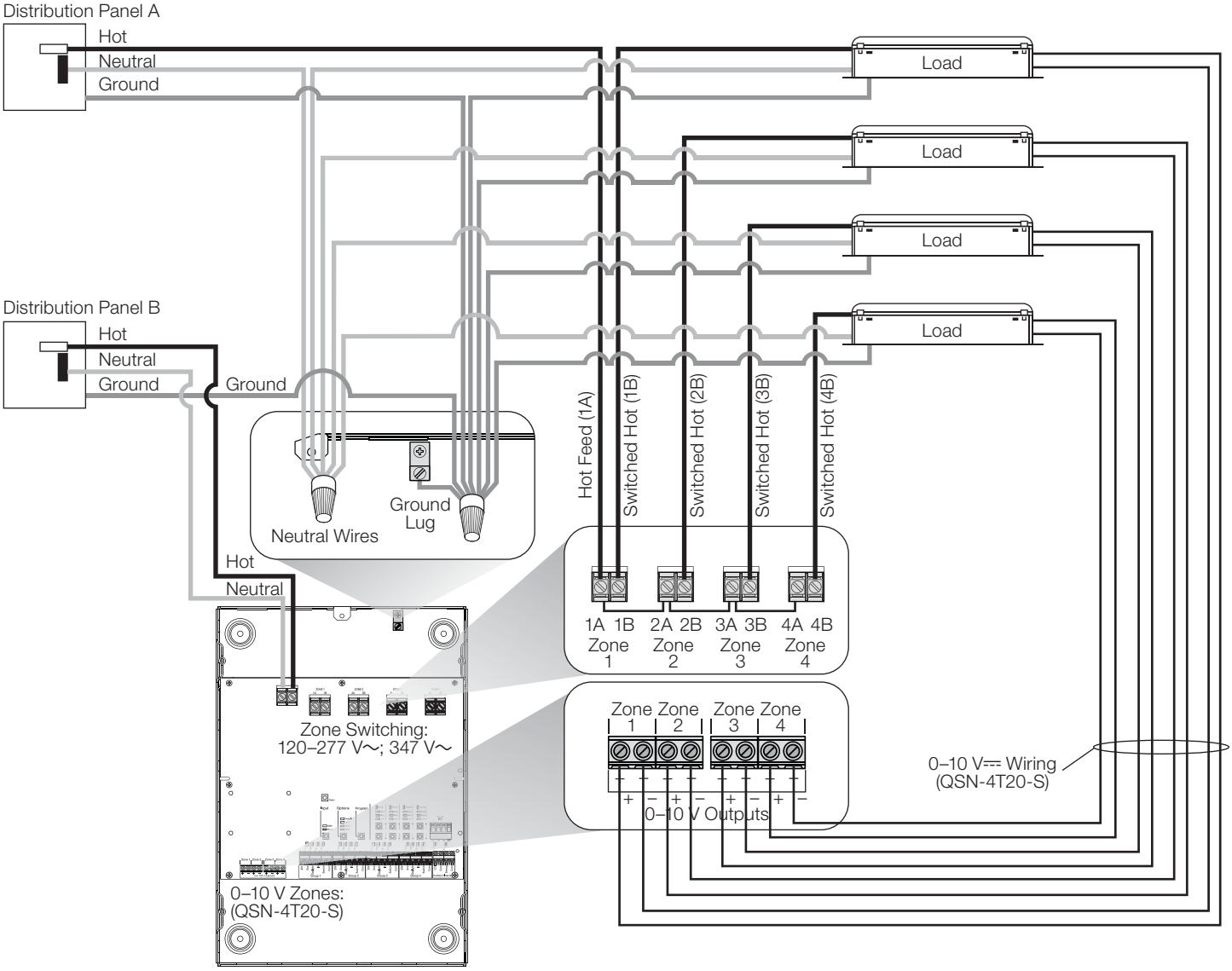


**0–10 V⎓ Wiring (QSN-4T20-S)**

- 20 to 12 AWG (0.5 to 4.0 mm²)
- Strip length: 1/4 in (6 mm)
- Torque: 5 in-lb (0.5 N•m)
- Connect only IEC PELV/NEC® Class 2 circuits or connect only non-IEC PELV/NEC® Class 2 circuits to 0–10 V⎓ zones 1–4.
- 0–10 V⎓ zones 1–4 are not isolated from each other.
- Negative (–) terminals are not internally connected to each other; both positive (+) and negative (–) connections must be made.
- Follow all national and local codes for separation requirements.

Lutron, Lutron, Softswitch, Pico, Quantum, seeTouch, and GRAFIK Eye are trademarks of Lutron Electronics Co., Inc. registered in the U.S. and other countries.
Energi Savr Node and Radio Powr Savr are trademarks of Lutron Electronics Co., Inc.



| Job Name: | Model Numbers: | |
|---|---|---|
| | | |
| Job Number: | | |