Class J Fuse Disconnect Switch

LM3060 Series

60 A

REACH RoHS

*Handle and fuses sold separately

Description

The Class J Fuse Disconnect Switch combines a switch and multiple fuses in a single, compact device. This switch, with both front or side operation, offers a simpler way to manually open and close a circuit while safeguarding against overcurrent and short circuits. When it detects an overload or short circuit, the fuse blows automatically to open or break the circuit both upstream and downstream and shuts off the equipment.

When installing or maintaining equipment, the Class J Fuse Disconnect Switch makes it easier to connect or disconnect the power in an isolated area. With a higher interrupting rating, it delivers more robust protection, increases personnel safety and offers a longer switch life.

Features & Benefits

FEATURES	BENEFITS
Fuse isolation	Makes it easy to segregate a particular fuse on the circuit for safe repair or maintenance
Double break contact system	Breaks circuit upstream and downstream enabling the switch to handle higher voltages and provide a longer switch life
Small footprint	Saves space and provides design flexibility
Optional handles (direct handle with push-to-detach system or external handle with shaft) with front or side operations	Offer adaptability to system design. In addition, no tools are required for the frontal direct handle providing easy and quick installation
Safe-to-touch transparent fuse covers	Cannot be opened in the "ON" position for extra protection and provides visibility to fuses—without opening module—for added convenience
Lockout-tagout	When the device is in the “OFF” position, a padlock can be added to ensure equipment is properly shut off during maintenance or repair to prevent the release of hazardous energy
Horizontal (standard), vertical and 45-degree mounting orientations	Offer switch installation options to adapt to system design
Test position on handle	Permits control circuit auxiliary testing without switching the main contacts on for added safety

Applications

- Industrial: service switchboards, distribution panels, control panels/motor control centers, compressors, drives, voltage stabilizers, UPS systems
- HVAC/R: air handling units, rooftop systems, compressors, chillers, refrigeration racks
- Mining: conveyor systems, main substations
- Solar: auxiliary services transformers
- Battery Energy Storage Systems: auxiliary services transformers

©2023 Littelfuse, Inc.
Specifications are subject to change without notice.
Revised: 10/24/2023

Specifications

UL 98 Standards

Voltage Rating	600 V Ac
Amperage Rating	60 A
SCCR Rating	200 kA
Ambient Temperature	-20 °C to 50 °C (-4 °F to 122 °F)
Insulation Voltage Rating Ui	1000 V Ac
Impulse Withstand Voltage Rating U_{imp}	8 kV

Other Characteristics

Three Phase Maximum HP Rating/Motor FLA Current	240 V ac: 15 HP/42 A 480 V ac: 30 HP/40 A 600 V ac: 50 HP/52 A
Fuse	Class J*
Fuse Size	27 x 60 mm (1.06 x 2.36”)
Connection	Terminal
Maximum Width Terminal Busbar Connection Range	20 mm
Tightening Torque	53 lb·in
Flange Wire Range	AWG #6-2/0 (terminal lug required)
Base Mounting	Screws
Materials	Plastic housing, silver-plated copper terminals
Flammability Rating	UL 94 V-0
Applicable Standards	UL98 & UL 94 UL Guide WHTY UL Guide WHTY7 UL Listed E513470 CSA C22.2 NO 4 CE
Environmental	RoHS Compliant REACH
Country of Origin	Spain

*Fuses sold separately.

Certification & Compliance

cULus	UL 98, Fourteenth Edition, E513470
CE	Declaration of Conformity (Main Device): EU_DOC-LM3_230731_0 (Accessories): EU_DOC-LM3_Accessories_230731_0
RoHS	RoHS 2 Directive 2011/65/EU; Directive (EU) 2015/863
REACH	REACH declaration: Regulation (EC) No 1907/2006

©2023 Littelfuse, Inc.
Specifications are subject to change without notice.
Revised: 10/24/2023

Accessories

Frontal Direct Handle LDM3SIB1
For open panel door access. Offers front operation. Features an easy push-to-detach system that requires no tools to attach or disassemble the handle.

Frontal External Handle with Shaft ON-OFF-TEST LDM3SAB1
For closed panel door access. Includes the 'TEST' position to enable testing of the control circuit auxiliaries without switching the main contacts on to simplify maintenance and increase safety. Offers front operation only.

Lateral External Handle with Shaft ON-OFF-TEST LDM3SBB1
For closed panel door access. Includes the 'TEST' position to enable testing of the control circuit auxiliaries without switching the main contacts on to simplify maintenance and increase safety. Offers side operation only.

Terminal Shrouds LDM3CU02
Protect against direct contact with the terminal.

Auxiliary Contact LDM3AUB1
Provides a signal to indicate the position of the switch.

Key Lock Device LDSCAB1 (single)
Locks the operation of the switch with a key to prevent accidents and increase safety.

Key Lock Device LDSCEB1 (double)
Locks the operation of the switch with a key to prevent accidents and increase safety.

Terminal Lugs LDM3TLU01 (1 pair)
Fastens the cable to a cage for stability.

Part Numbering System

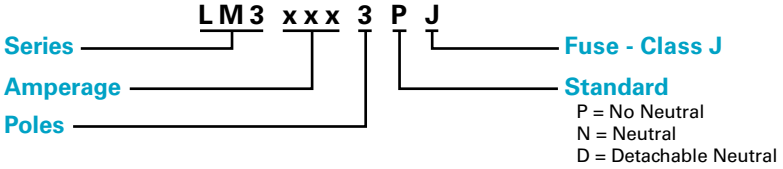

Ordering Information

PART NUMBER	AMPERAGE	VOLTAGE	NUMBER OF POLES	STANDARD	FUSE CLASS J*	FUSE SIZE
LM30603PJ	60 A	600	3	No Neutral	JTD/JLS	27 x 60 mm
LM30603NJ	60 A	600	3	Neutral	JTD/JLS	27 x 60 mm
LM30603DJ	60 A	600	3	Detachable Neutral	JTD/JLS	27 x 60 mm

*Fuses sold separately

©2023 Littelfuse, Inc.
Specifications are subject to change without notice.
Revised: 10/24/2023

Dimensions Millimeters (inches)

LM30603PJ – No Neutral

FRONT VIEW

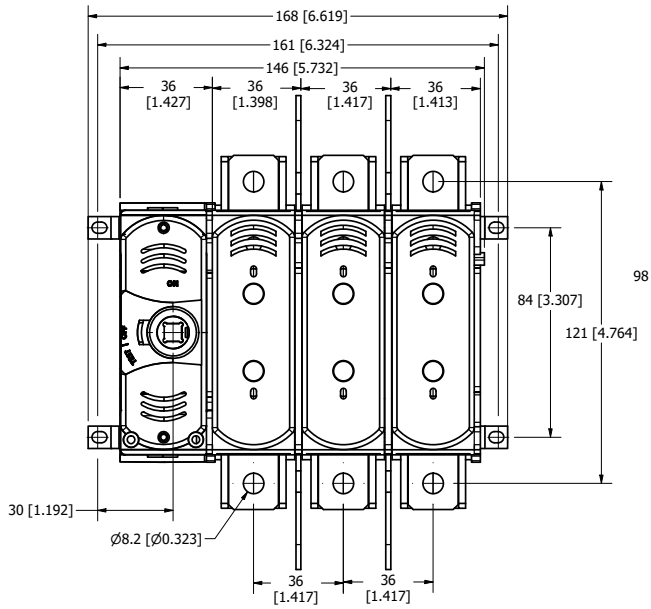

SIDE VIEW

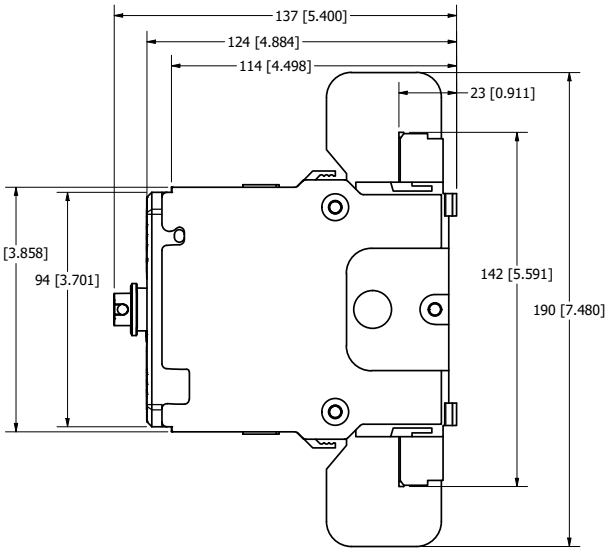

LM30603NJ – Neutral

FRONT VIEW

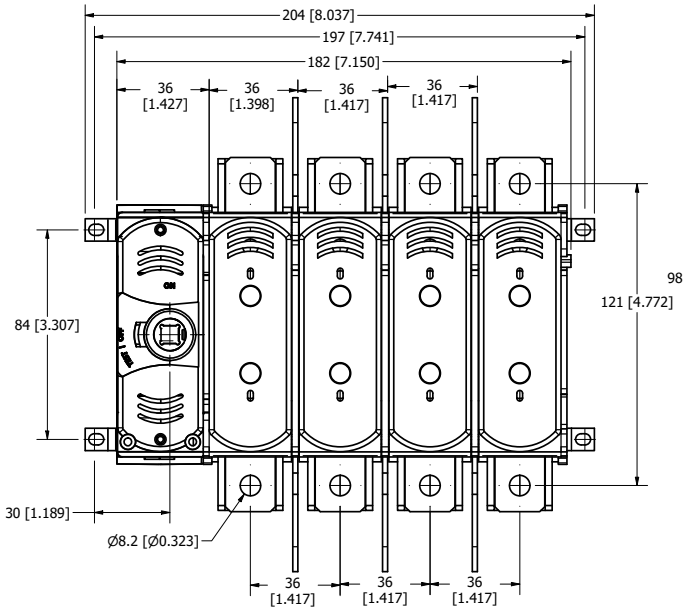

SIDE VIEW

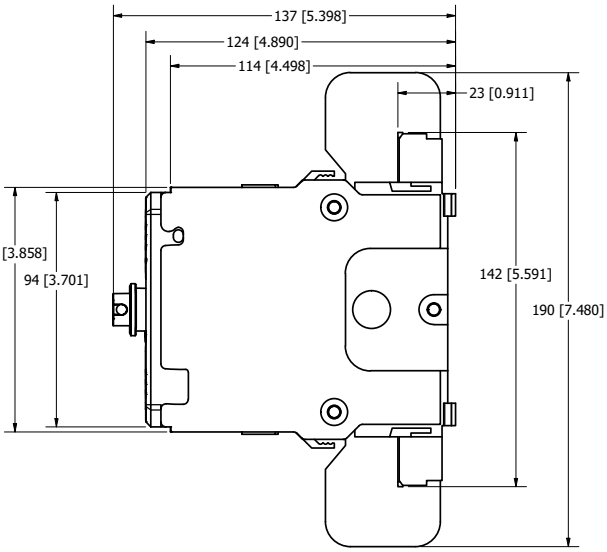

©2023 Littelfuse, Inc.
Specifications are subject to change without notice.

LM30603DJ – Detachable Neutral

FRONT VIEW

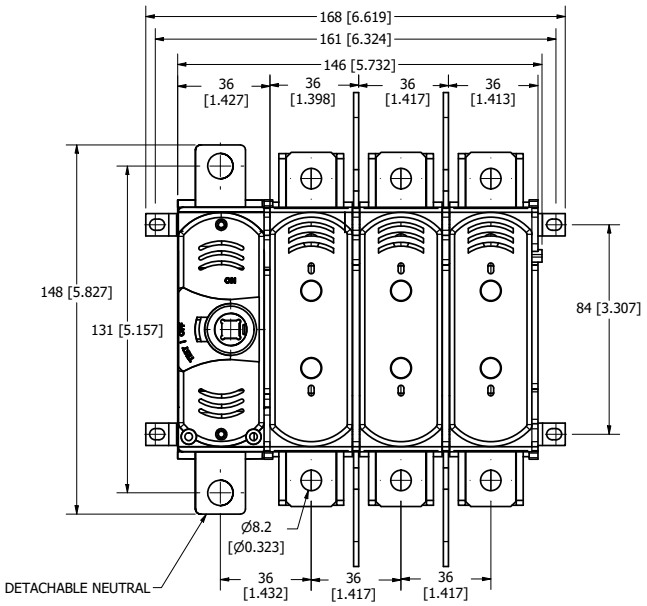

SIDE VIEW

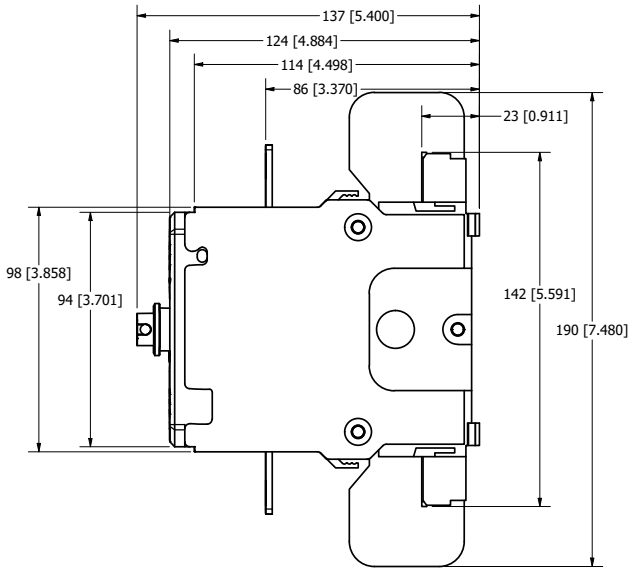

Switch – 3D Installation View

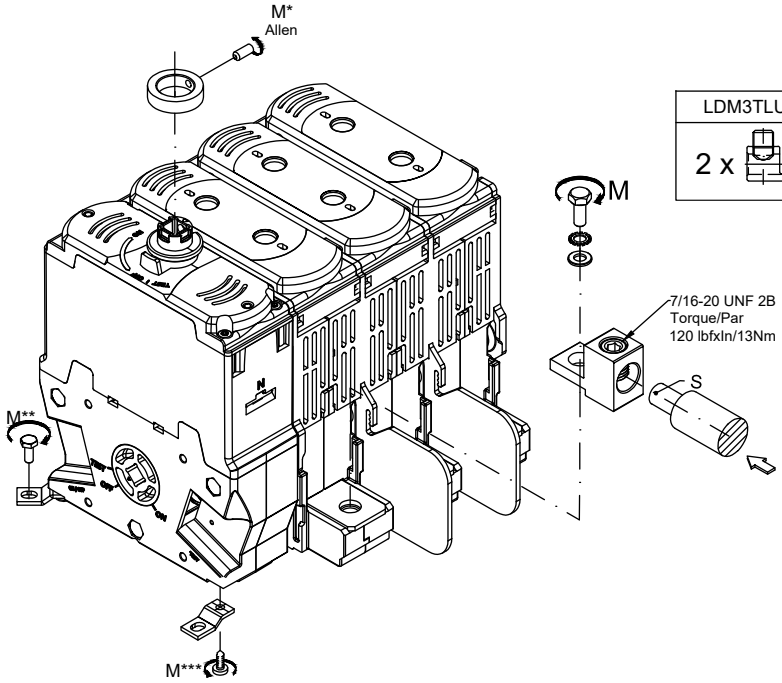

LDM3TLU01
2 x

M		M (+5 % | -10 %)	
		N•M	LBF•INCH
*	M4	1	8.85
**	M4	1.5	13.3
***	CH 3.5	0.8	7.1
**** Optional terminal lugs for attachment	UNF 2B 7/16-20	13	120

COPPER (CU) WIRE - S MAX					
THERMAL CURRENT RATING (Ith)	mm²	AWG		M (+5 % | -10 %)	
				N•M	LBF•INCH
60 A	6-50	10-2/0	M8	6	53

Disclaimer Notice – Information furnished is believed to be accurate and reliable. However, users should independently evaluate the suitability of and test each product selected for their own applications. Littelfuse products are not designed for, and may not be used in, all applications. Read complete Disclaimer Notice at **www.littelfuse.com/product-disclaimer.**

©2023 Littelfuse, Inc.
Specifications are subject to change without notice.

Revised: 10/24/2023