Tel: +1-800-832-3873
E-mail: techline@littelfuse.com
www.littelfuse.com/AF0025

AF0025
ARC-FLASH RELAY
Instruction Manual

REVISION 0-A-081523

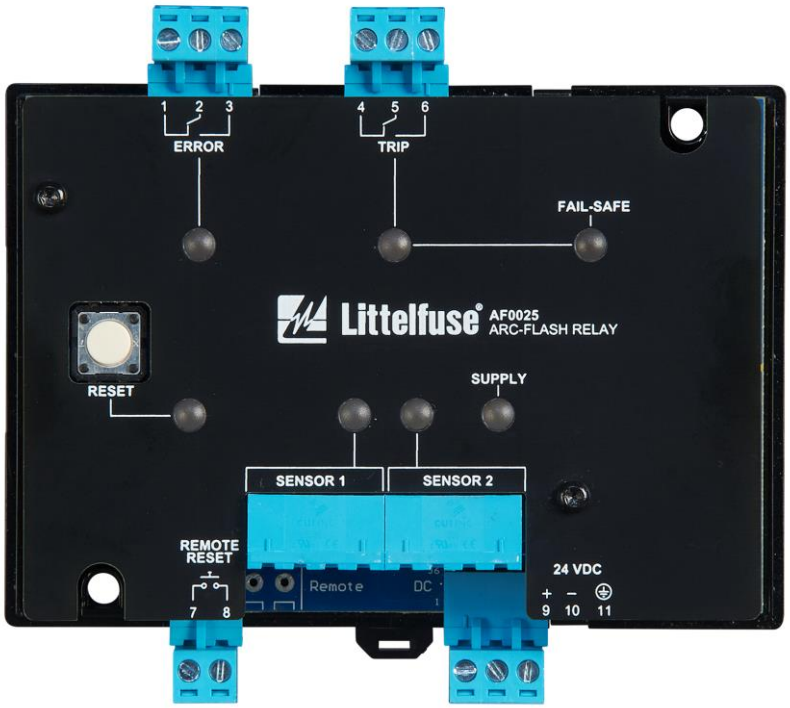

Copyright © 2023 Littelfuse
All rights reserved.

Document Number: PM-1431-EN

This page intentionally left blank.

TABLE OF CONTENTS

1 KEY FEATURES 1
1.1 Easy Installation 1
1.2 Fail-Safe Operation..... 1
1.3 Fast Error and Fault Location.....1
2 SENSOR PLACEMENT 4
2.1 General Guidelines 4
2.2 Switchgear Protection..... 4
2.3 Transformer Protection 4
2.4 Generator Protection.....4
3 OPTICAL SENSORS 5
3.1 PGA-LS10-01B Photoelectric Point Sensor with Sensor Check.....6
3.1.1 PGA-LS10-01B Connection.....7
3.1.2 PGA-LS10-01B Installation 8
4 APPLICATION EXAMPLES 9
4.1 Basic Scenario: One Sensor - One Circuit Breaker.....9
4.2 Total Clearing Time 10
4.2.1 Arc-Detection Delay 10
4.2.2 Circuit Breaker Operating Time.....10
4.2.3 Total Clearing Time Examples 10
5 INSTALLATION AND TERMINALS 10
5.1 Power Supply 12
5.1.1 Auxiliary DC Supply.....12
5.1.2 Supply Surveillance.....12
5.2 Inputs and Outputs 12
5.2.1 ERROR Signal Relay 12
5.3 Sensors.....12
5.3.1 Light Immunity 12
5.3.2 Extending or Shortening Cable Length.....12
6 USER INTERFACE 13
6.1 Reset Button 13
6.2 LED Indication and Relay Operation 13
7 COMMISSIONING.....15
7.1 Configuration of Installed Sensors 15
7.2 Testing the Sensors.....15
7.3 Testing the TRIP Output and Associated Circuit Breaker 15
7.4 Full Operation Test 15
8 SUPPORT RESOURCES 15
8.1 Sending Information for Support 15
9 SPECIFICATIONS 16
9.1 AF0025 16
9.2 EMC Tests 17
9.3 Environmental Tests 17
9.4 Safety.....18
9.5 Certification 18
9.6 Sensors.....18
9.7 Ordering Information 19
9.8 Related Products 19
9.9 Warranty 19

APPENDIX A: INSTALLATION LOG SHEET 21
APPENDIX B: REDUNDANT TRIP CIRCUIT DESCRIPTION.....22
APPENDIX C: AF0025 REVISION HISTORY 23

LIST OF FIGURES

1 AF0025 Top View..... 2
2 AF0025 Typical Wiring Diagram 3
3 PGA-LS10 Detection Range for a 3 kA Fault..... 6
4 PGA-LS10-01B Connection Diagram..... 7
5 PGA-LS10-01B Mounting Detail 8
6 Basic AF0025 Configuration..... 9
7 AF0025 Outline And Mounting Details.....11
8 TRIP and ERROR Relays Maximum Switching Capacity.....20

LIST OF TABLES

1 Circuit Breaker Operating Time 10

This page intentionally left blank.

1 KEY FEATURES

The AF0025 Arc-Flash Relay is a high-speed, arc-detection device for electrical power-distribution systems. The AF0025 has one Form-C Trip relay, one Form-C Error relay, and has inputs for up to two optical point sensors for optimal arc detection.

Using optical sensors rather than relying strictly on current measurement allows a much faster detection time than overcurrent relays or a circuit breaker alone can typically provide, as the light from the arc is unique to arc faults, whereas current pulses above the nominal level are part of normal operation for many systems.

On the occurrence of an arc fault, the AF0025 detects the fault and activates the trip relay, which trips the circuit breaker supplying the fault. In a typical system, a trip occurs within 5ms. The total arcing time is effectively reduced to the mechanical opening time of the circuit breaker, typically between 30 and 75 milliseconds. This reduces the energy of the arc fault significantly, increasing worker safety, reducing fault damage, and improving uptime.

The AF0025 can be used on ac or dc electrical systems and can be powered from a 24 Vdc supply. For all available ordering options, see section 9.7.

1.1 Easy Installation

The AF0025 includes two sensor inputs, one trip relay, one error relay, and a remote-reset input. See Fig. 1.

The relay will automatically learn which sensors are connected, and will indicate an alarm if a previously connected wire breaks or is unplugged. If a configuration change is needed, the redetection process can be triggered by pressing the Reset button for 10 s. See section 6.1.

1.2 Fail-Safe Operation

The AF0025 continuously monitors its internal circuitry as well as the connected optical sensors. Any system faults, including a sensor-cable fault, are indicated by an Error relay and the Error LED on the front panel.

A redundant trip circuit ensures that the AF0025 will trip the circuit breaker on an arc flash even if a primary trip-circuit component fails (shunt trip mode only). The design of the redundant trip circuit also provides a significantly faster response to an arc on power-up (for example, after maintenance during a shutdown) than is possible with microprocessor-only relays, which is an advantage in smaller self-powered systems.

1.3 Fast Error and Fault Location

The optical sensors used with the AF0025 have built-in LEDs for indication of health and for easy location of arc faults. The AF0025 also has one LED per optical sensor on the front panel to indicate which sensor(s) have caused a trip and for indicating problems in the installation.

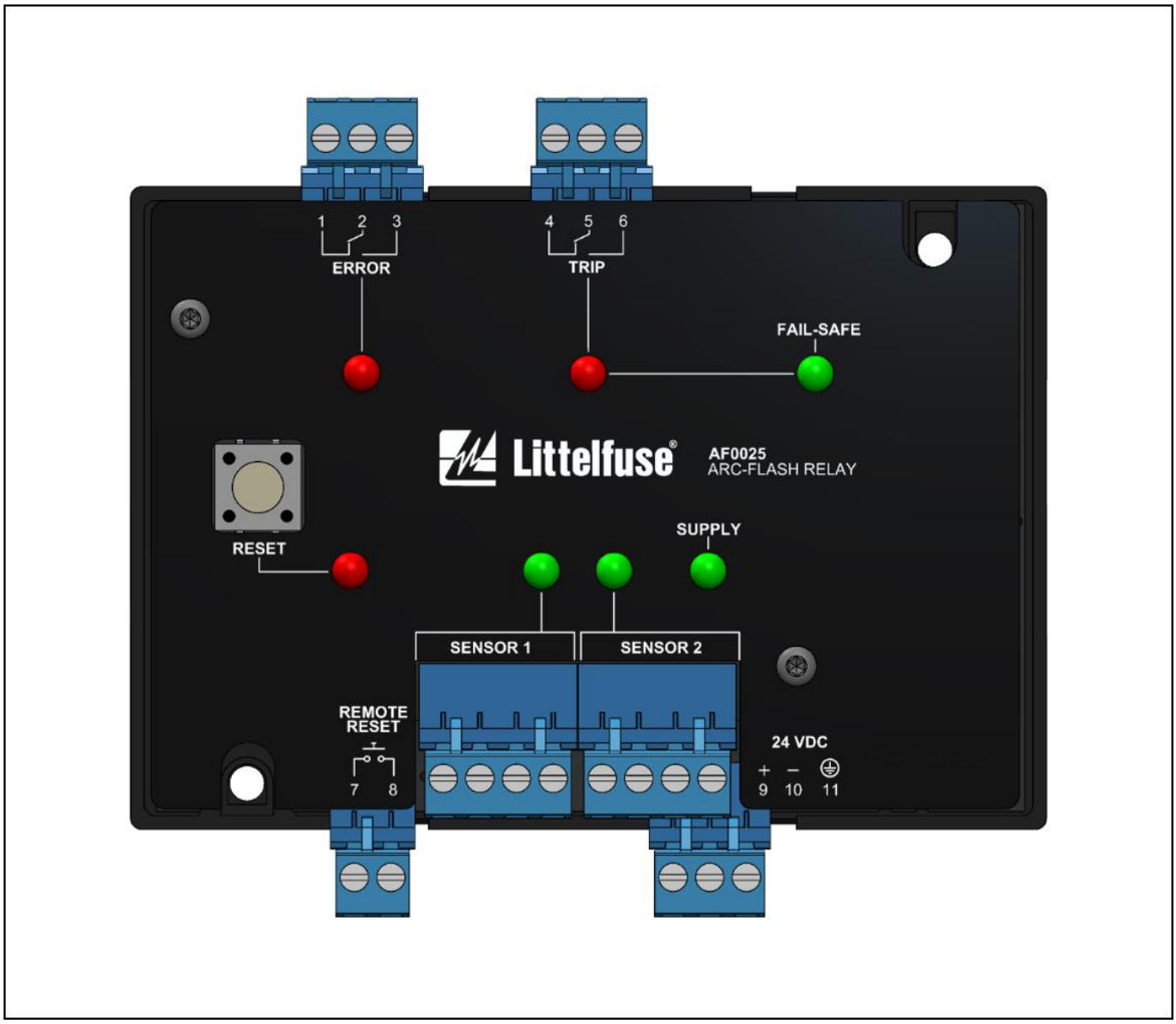

FIGURE 1. AF0025 Top View.

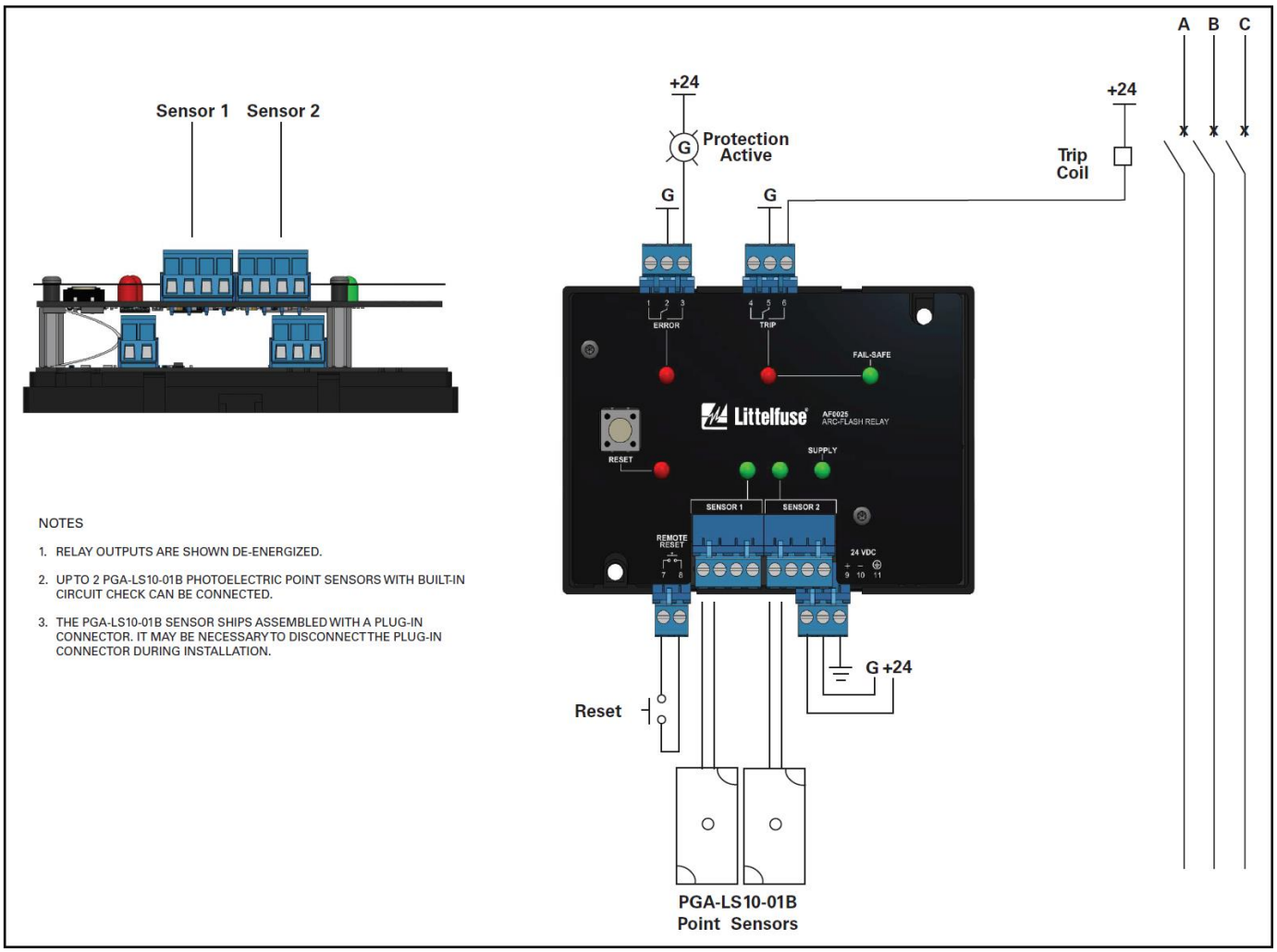

FIGURE 2. AF0025 Typical Wiring Diagram.

2 SENSOR PLACEMENT

2.1 General Guidelines

Optical sensors should have line-of-sight to points being monitored. Ensure that the point sensors are not blocked by fixed or moveable objects. Areas that will be accessed for maintenance or with moveable parts (such as draw-out circuit breakers) should be considered a high priority for installation. Do not place sensors or cables on bare components that will be energized and avoid sharp bends in the cable. The electrical cables and sensors should be considered to be at ground potential when determining electrical clearances.

Sensors should be mounted in a location that will minimize the chance of debris or dust build-up and with easy access for maintenance if needed. A point sensor mounted at the top of an enclosure and facing down is optimal for reducing dust build-up. It should be noted that most enclosures are metallic and the reflectivity combined with the high intensity of an arc mean that even a moderately dusty sensor will collect adequate light.

In dusty environments, sensor cleaning should be part of a regular maintenance schedule and can be performed using compressed air or a dry cloth.

2.2 Switchgear Protection

The sensors used for arc-flash detection are optical sensors. Line-of-sight between the points where an arc could occur and the sensor is optimal, but the reflectivity of metallic compartments will help in distributing the light from an arc fault in the entire cabinet.

Often one point sensor is sufficient to monitor a complete switchgear compartment. However, if there are large components such as circuit breakers that cast shadows over wider areas, more than one point sensor is required.

2.3 Transformer Protection

The AF0025 can also be used for the protection of transformers. Two sensors should be used per transformer to monitor the primary and secondary connection terminals. For the placement of the sensors, the same considerations apply as for switchgear protection.

2.4 Generator Protection

The main area of concern for protecting the generator is the conductors between the generator and the generator breaker. A fault in this area is not protected by the generator breaker from overcurrent or arc flash. Often, one or two sensors are enough to monitor the breaker and bus connection back to the generator. If other electrical equipment is installed on the generator, it should also be considered in an arc-flash risk assessment. When protecting the generator to a breaker connection, it is important to disconnect all sources of energy for the arc flash. Open the generator breaker to disconnect from the utility or other parallel generators, and connect to the automatic voltage regulator (AVR), emergency stop or other control circuit to turn off the generator.

3 OPTICAL SENSORS

The AF0025 has two inputs for optical arc-fault sensors.

One sensor type is currently supported:

- PGA-LS10-01B Photoelectric Point Sensors with sensor check, 1 m (3.3 ft) cable length

Point sensors have LED indication of sensor health and fault location. A sensor-check circuit tests the sensor to verify that the sensor assembly is functioning correctly. A healthy sensor will flash its internal red LED every few seconds. A sensor that has detected an arc will indicate solid red (with a brief flash every few seconds) until the trip is reset.

Any connected optical sensor with circuit check will be automatically detected and cause the AF0025 to report an error if it is subsequently disconnected.

NOTE: Inserting and removing a sensor cable can cause a trip, depending on which terminals make contact first. To guard against nuisance tripping, remove the trip coil terminal blocks before connecting and disconnecting sensors, or perform the maintenance while the system is de-energized.

PGA-LS10-01B

3.1 PGA-LS10-01B Photoelectric Point Sensor with Sensor Check

This sensor has a detection area of a 2-m (7-ft) half-sphere for arcs of 3 kA or more.

A built-in LED enables the AF0025 to verify the function of the light sensor, wiring, and electronics. If the sensor does not detect the sensor-check LED, a sensor-fail alarm will occur – the ERROR relay will change state and the sensor indication LED will begin to flash. See Section 6.

The sensor includes 1 m (3.3 ft) of shielded three-wire electrical cable which can easily be shortened or extended to a maximum of 50 m (164 ft). For more information on sensor cabling, see Section 5.3.2.

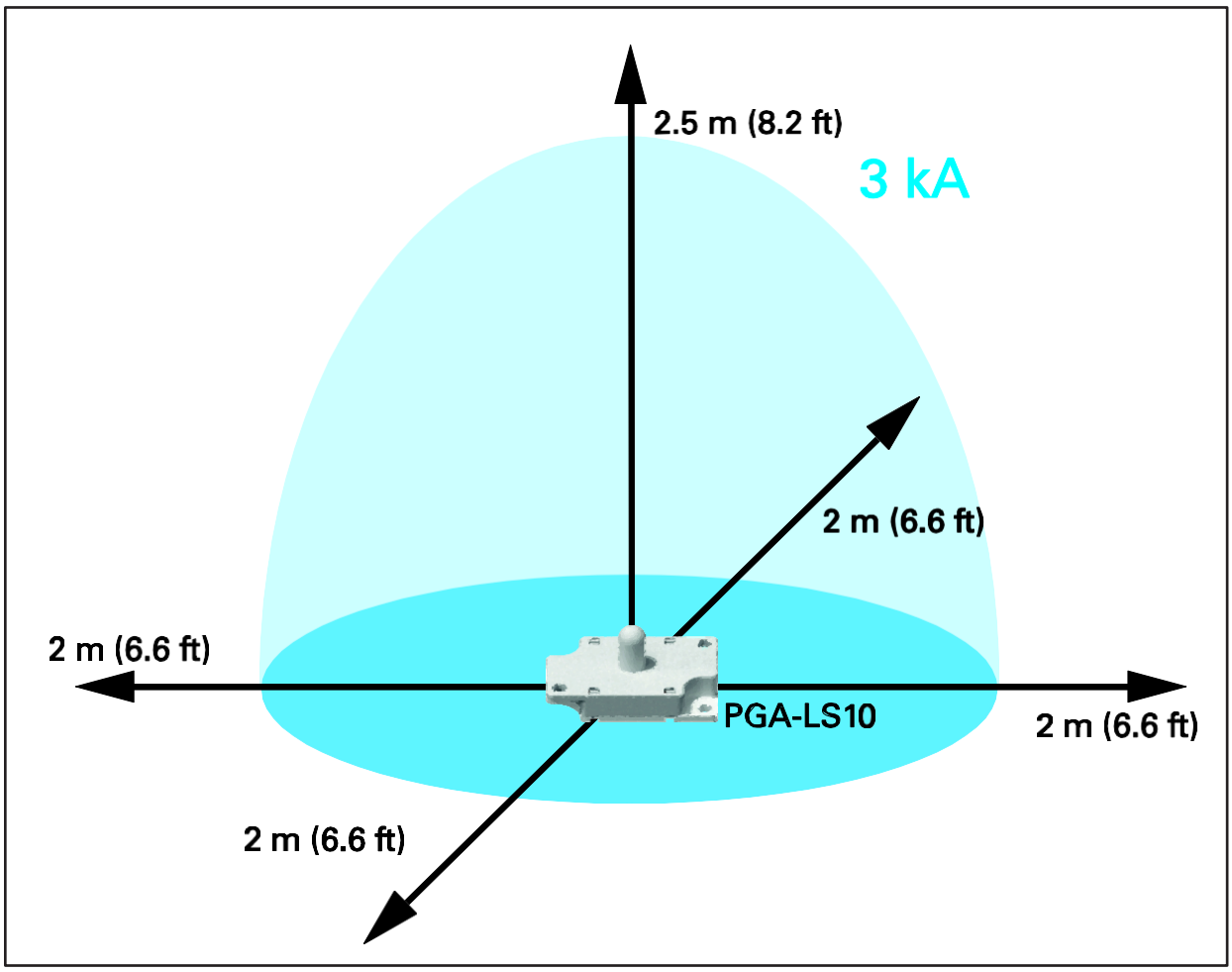

FIGURE 3. PGA-LS10 Detection Range for a 3 kA Fault.

3.1.1 PGA-LS10-01B Connection

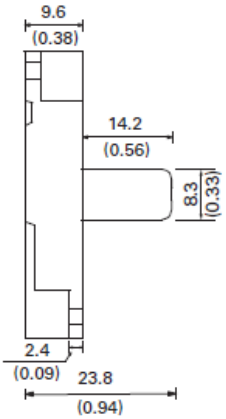

POINT SENSOR SIDE VIEW

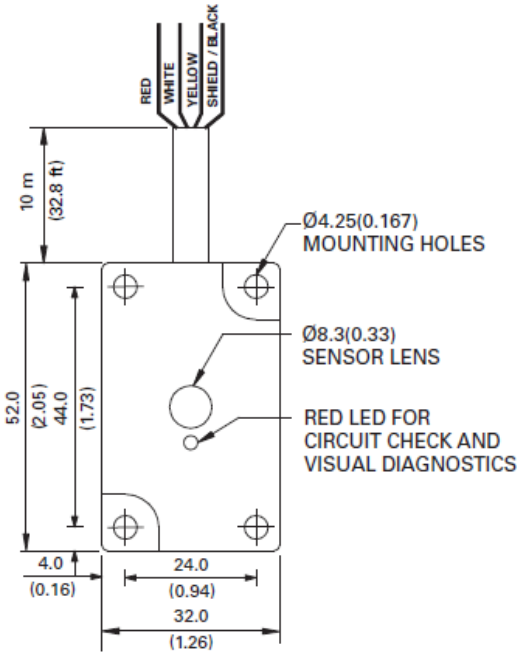

POINT SENSOR TOP VIEW

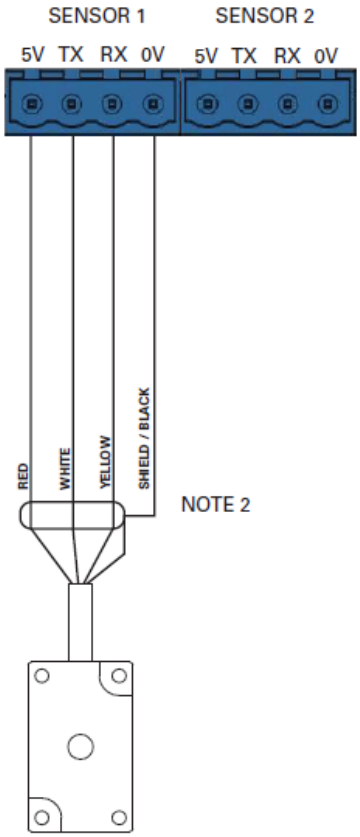

NOTES

1. DIMENSIONS IN MILLIMETERS (INCHES) UNLESS OTHERWISE STATED.
2. UP TO 2 PGA-LS10-01B PHOTOELECTRIC POINT SENSORS WITH BUILT-IN CIRCUIT CHECK CAN BE CONNECTED.
3. THE PGA-LS10-01B SENSOR SHIPS ASSEMBLED WITH A PLUG-IN CONNECTOR. IT MAY BE NECESSARY TO DISCONNECT THE PLUG-IN CONNECTOR DURING INSTALLATION.

TERMINAL	FUNCTION	COLOR
5V	SUPPLY	RED
TX	CIRCUIT CHECK TRANSMIT	WHITE
RX	RECEIVE	YELLOW
0V	SHIELD	BLACK/COPPER

FIGURE 4. PGA-LS10-01B Connection Diagram.

3.1.2 PGA-LS10-01B Installation

The PGA-LS10-01B point sensor includes an adhesive-backed drill template for easy surface or panel-mount installation.

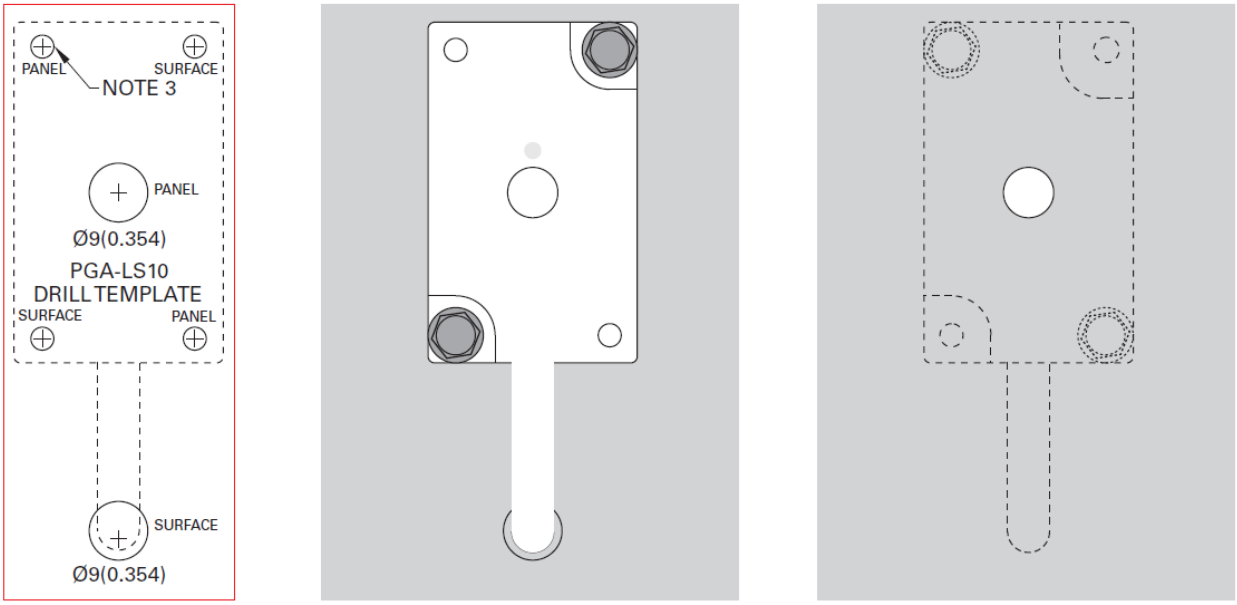

DRILL TEMPLATE

SURFACE-MOUNTED
PGA-LS10-01B

PANEL-MOUNTED
PGA-LS10-01B

NOTES AND INSTALLATION:

1. ALL DIMENSIONS IN MILLIMETERS (INCHES).
2. AFFIX THE DRILL TEMPLATE WHERE THE SENSOR IS TO BE MOUNTED.
3. MOUNTING SCREWS ARE M4 OR 8-32.
4. THE PGA-LS10-01B CAN BE SURFACE OR PANEL MOUNTED. SELECT THE APPROPRIATE HOLES AND DRILL THROUGH THE TEMPLATE.

FIGURE 5. PGA-LS10-01B Mounting Detail.

4 APPLICATION EXAMPLES

4.1 Basic scenario: One Sensor – One Circuit Breaker

No configuration necessary.

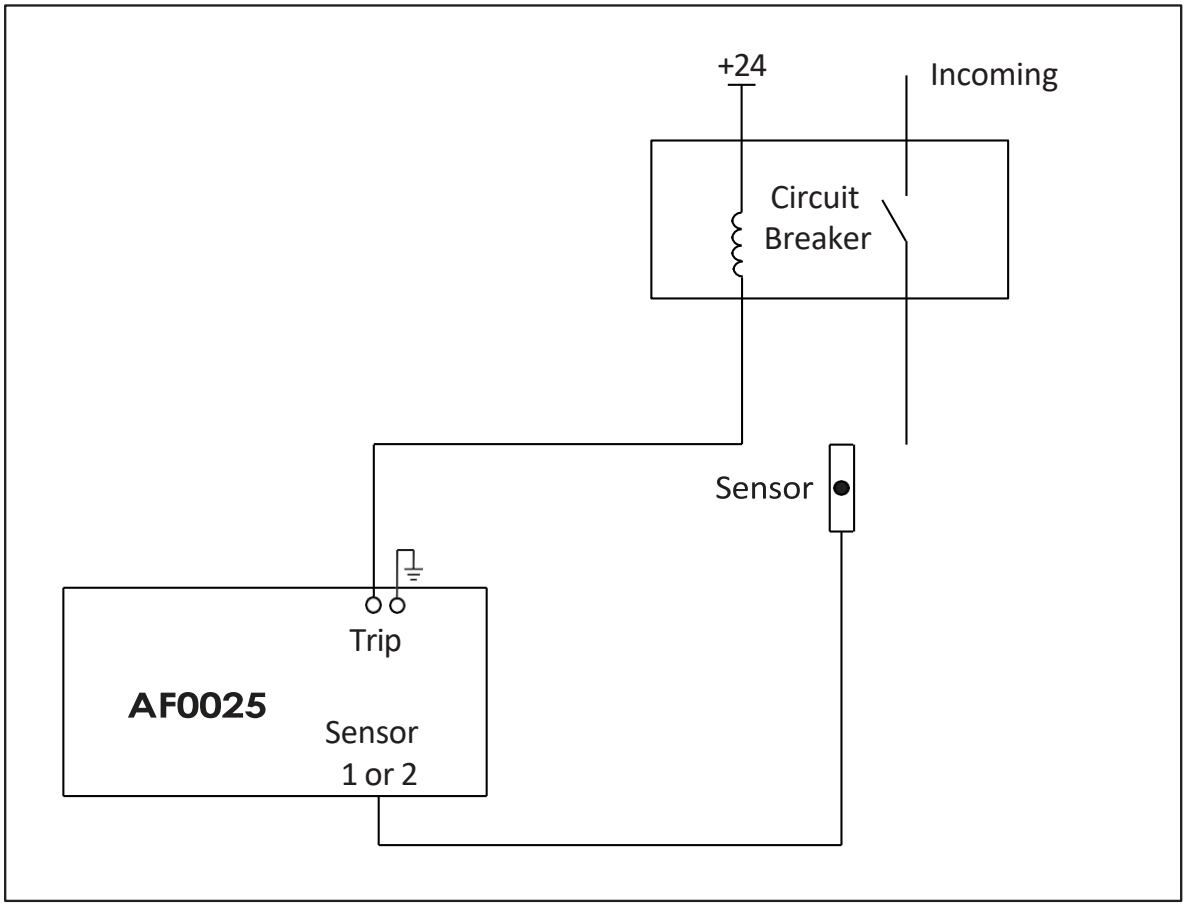

FIGURE 6. Basic AF0025 Configuration.

4.2 Total Clearing Time

The AF0025 is capable of tripping a circuit breaker in less than 5 ms (typical) from when light hits the sensor. This is not the same as the clearing time for the fault. The arc fault will continue until the current to the fault has stopped flowing, which happens when the circuit breaker connected to the unit has reacted.

4.2.1 Arc-Detection Delay

The AF0025 default arc-flash detection intentional delay time is 1 ms.

The total operating time will be the intentional delay plus the relay operating time based on wiring and configuration. The AF0025 operating times with an intentional delay of 1 ms are shown below.

OPERATING MODE	CONTACT CONFIGURATION	TRIP TIME
Shunt (Non-fail-safe)	N.O. (Normally Open)	< 5 ms
	N.C. (Normally Closed)	< 3 ms
Undervoltage (Fail-safe)	N.O. (Normally Open)	< 5 ms
	N.C. (Normally Closed)	< 8 ms

4.2.2 Circuit Breaker Operating Time

Circuit breakers have a predetermined operating time, dependent on the type of circuit breaker. Older circuit breakers have clearing times up to eight cycles, while modern circuit breakers are able to open in one to five cycles. Refer to the specifications of the installed circuit breaker.

The total clearing time is:

Total Clearing Time = Arc-Detection Delay + Local Circuit Breaker Operating Time

With the AF0025, the dominating time by far is the circuit breaker operating time.

4.2.3 Total Clearing Time Examples

Example: Total Clearing Time with a 3-cycle circuit breaker

A 3-cycle circuit breaker at 50 Hz tripping due to light on an AF0025 sensor will have a total clearing time of:

5 + 60 = 65 ms

It is possible to reduce the total clearing time by installing special devices, which shunt the current away from the arc fault. These can be found with clearing times down to 1-2 ms, reducing the total clearing time down to less than 7 ms.

5 INSTALLATION AND TERMINALS

The AF0025 can be surface mounted using two #6 screws (19mm or longer), or it can be DIN-rail mounted.

Ensure there is enough clearance around the module to allow the plug-in terminals to be removed and inserted.

Do not install modules which have been damaged in transport.

TABLE 1. CIRCUIT BREAKER OPERATING TIME.

CIRCUIT BREAKER OPERATING TIME	50HZ	60HZ
8 cycles	160 ms	133 ms
5 cycles	100 ms	83 ms
3 cycles	60 ms	50 ms
2 cycles	40 ms	33 ms
1½ cycles	30 ms	25 ms
1 cycle	20 ms	17 ms

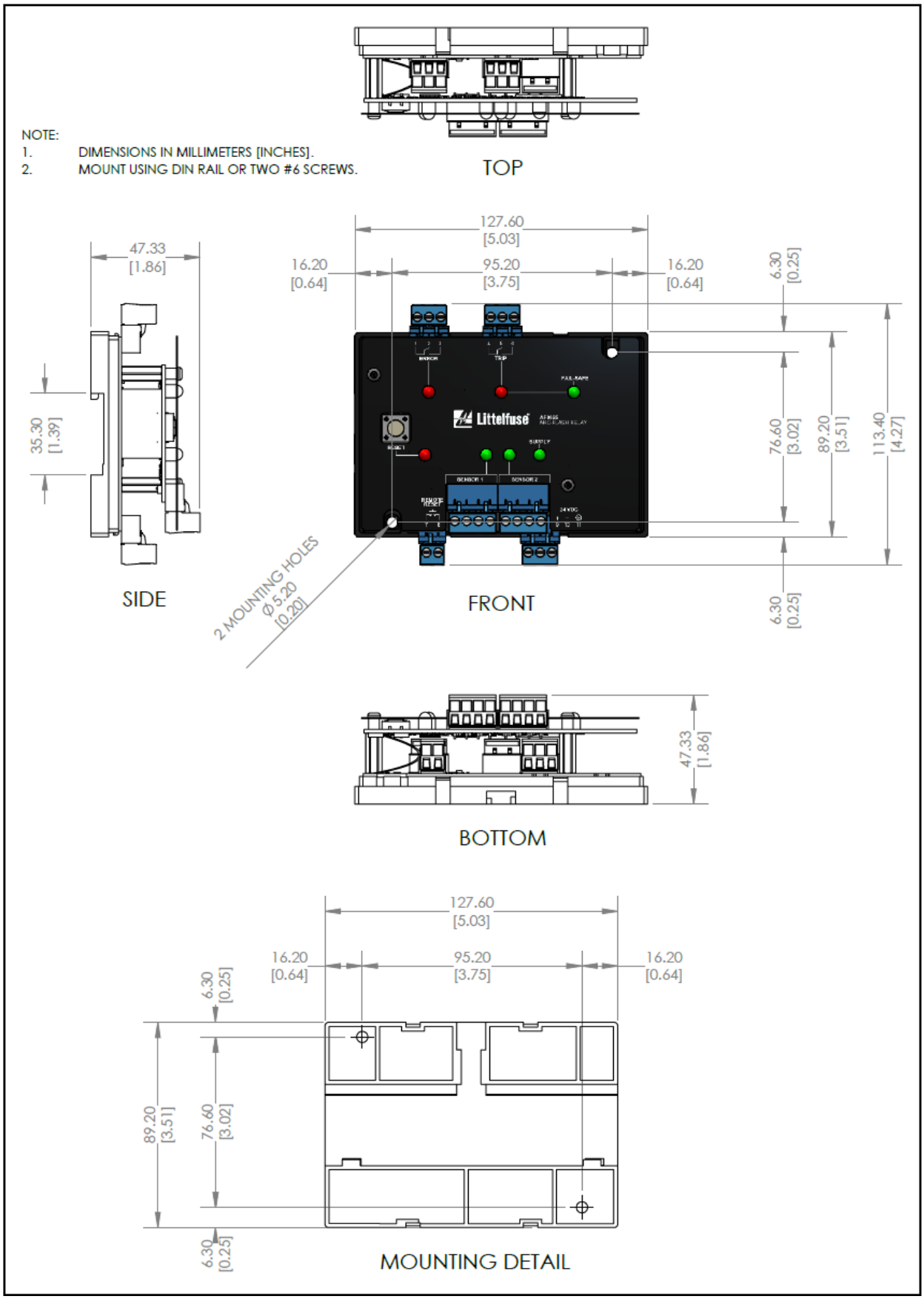

FIGURE 7. AF0025 Outline and Mounting Details.

5.1 Power Supply

The AF0025 Arc-Flash Relay can be supplied by an auxiliary low voltage supply.

5.1.1 Auxiliary DC Supply

Connect a dc supply to terminals 9 and 10, ensuring correct polarity. The supply voltage must be 24 Vdc (range is 18.5 to 30 Vdc).

5.1.2 Supply Surveillance

The AF0025 will indicate an error if the 24 Vdc supply is less than 18.5 Vdc.

The error will auto-reset when the supply increases higher than 19 Vdc but less than 30 Vdc. The error will also auto-reset if the supply is within the range of 18.5 to 30 Vdc and the supply is cycled.

5.2 Inputs and Outputs

An LED provides visual indication of each input and output status. The output contacts are shown on the front panel in the de-energized state.

5.2.1 ERROR Signal Relay

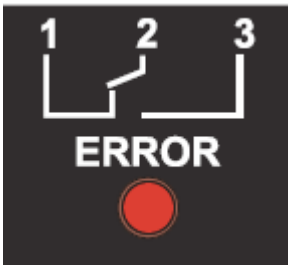

The ERROR output signals the health of the arc-flash relay and its connected sensors and supplies.

The ERROR output consists of an insulated electromechanical change-over contact (Form C / SPDT) on terminals 1, 2, and 3. In the fail-safe mode, the ERROR relay will be energized when there are no alarms.

If an error is currently active and an additional error occurs, the ERROR output will briefly change state. This is to communicate to connected equipment the error state has changed, but there are outstanding errors.

If possible, an LED on the front panel will indicate where the error is by flashing.

5.3 Sensors

Two optical sensors can be used with the AF0025. Sensor locations are identified as SENSOR 1 or SENSOR 2 on the top of the AF0025. See Section 3.

5.3.1 Light Immunity

By default, the sensors will signal an arc-fault event if the light intensity is above approximately 3 klux. The light intensity from an arc fault is very high, typically in the area of 1 Mlux, and the choice of 3 klux is mostly a compromise between being sufficiently above normal light levels (about 1 klux in a very well lit office environment) and the need to be able to test the system with a manageable light source such as a flashlight.

The light sensors are not usable outdoors or in direct sunlight, as the intensity of direct sunlight will saturate the sensors.

5.3.2 Extending or Shortening Cable Length

The PGA-LS10-01B sensors are delivered with 1 m (3.3 ft) of three-wire shielded cable. If the installation requires it, these cables can be shortened or extended up to 50 m (164 ft). See Sections 3.1. Use Belden 85240 or equivalent cable (wire colors may vary).

Do not combine several sensor cables within the same shield.

6 USER INTERFACE

6.1 Reset Button

The RESET button on the front panel of the AF0025 has two functions: A momentary press will reset any trip events or errors, and holding the button will initiate additional reset functions as described below.

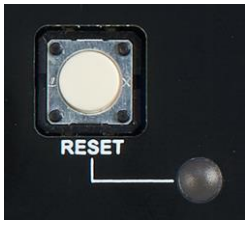

Pressing the reset button will reset trip indications and error indications for any existing error. The error indication will remain if the error is still present and cannot be reset, i.e. if a sensor is missing or a supply voltage is outside the specification. The RESET LED will be on while the button is pressed.

Holding the reset button for at least 10 seconds will redetect any connected sensors and power supply, which will clear the alarms. After 10 seconds, the RESET LED will begin flashing. Do not initiate the redetect process until the reason for the alarm is known and has been rectified.

Holding the reset button for at least 20 seconds will toggle the TRIP relay operating mode. After 10 seconds, the RESET LED will begin flashing. After 20 seconds, the RESET LED will be off. The FAIL-SAFE LED will toggle to show the current mode. The default mode is non-fail-safe.

If the reset button is pressed (or the remote reset terminals are shorted) for more than 40 seconds, the AF0025 will detect this condition as a stuck button error. The RESET LED will begin to flash during this error condition. The ERROR LED will be red, and the ERROR relay will de-energize. Once the issue has been resolved, the error will automatically clear.

6.2 LED Indication and Relay Operation

Blinking LEDs on the front panel indicate errors e.g. an expected sensor is missing, etc. To reset the expected state, use the RESET button.

DC SUPPLY (Terminals 9 to 11)

On, green	Supply voltage is connected.
Flashing green	Supply voltage is outside the specifications.
Off	Supply voltage is not connected.

ERROR Relay (Terminals 1 to 3)

On, red	An error has been detected, and the ERROR relay has been de-energized (fail-safe mode). If another LED is flashing, use this to localize the error and correct the problem.
Off	No errors detected.

The LED will not always follow the internal contacts. The ERROR relay will be in the state shown on the front panel when power is not connected.

In the fail-safe mode, the ERROR relay will energize if no errors are detected, and will de-energize on errors, or if power is removed.

The ERROR relay will also pulse for one second if an additional error is detected while errors are already present.

TRIP (Terminals 4 to 6)

On, red	A TRIP output is or has been active due to an arc-flash event. Press RESET to clear the trip.
Off	No unacknowledged trips.

The LED will not always follow the status of the internal contacts. The trip relay is shown on the front panel in its de-energized state.

In the fail-safe mode, the trip relay will energize when not in a tripped state, and will de-energize when in a tripped state, or if power is removed.

In the non-fail-safe mode, the trip relay will de-energize when not in a tripped state or if power is removed, and will energize when in a tripped state.

RESET Input (Terminals 7 to 8)

On, red	RESET input or another reset source (RESET button) is active.
Off	RESET input is inactive.
Flashing red	See Section 6.1.

FAIL-SAFE LED

On, green	TRIP relay is in fail-safe mode.
Off	TRIP relay is in non-fail-safe mode.
Flashing green	Fail-safe mode will toggle when the RESET button is released. See Section 6.1.

Sensors

On, green	The sensor input is active and has a functional sensor connected.
On, red	The sensor caused a trip event. The LED in the sensor will also be solid red (with brief flash every few seconds). Press the RESET button to clear the trip.
Flashing red	The circuit check of the sensor failed. Check the wiring of the point sensor. If possible, the LED in the sensor will also be flashing red. If a sensor has been removed temporarily or on purpose, press and hold the RESET button for at least 10 seconds to redetect any connected sensors.
Off	The input has not detected a connected sensor. The input will by default still be active.

PGA-LS10-01B

Off (with brief flashing red every 2 s)	
Red	The sensor is operating normally.
On, red (brief flashing red every 2 s)	The sensor caused a trip event.
Off	The sensor is unplugged or faulty, or the AF0025 is without power (check the wiring of the sensor).

7 COMMISSIONING

Littelfuse recommends always doing a full system test on all sensors and outputs to ensure that any errors in the cabling or configuration will be detected and can be corrected before the system is put into normal operation.

CAUTION: Make sure that the area is safe before this test. Ensure that loads and power are disconnected at the transformers, etc.

7.1 Configuration of Installed Sensors

The AF0025 will auto-detect sensors as they are connected. To reset any errors (shown as blinking red LED in a position where no sensor is attached), e.g. after moving a sensor to another position on the unit, press and hold the RESET button for at least 10 seconds. This will redetect any connected sensors.

7.2 Testing the Sensors

To test the tripping of point sensors, the intensity of light at the sensors needs to rise above 3 klux. The LED flash on most phones may not be sufficient, nor are most LED flashlights. Most incandescent flashlights (e.g. Mini Maglite with Xenon bulb or larger) can be used, if the beam can be focused to a very small circle and the flashlight is brought right next to the sensor. A normal AC light bulb can also be used.

7.3 Testing the TRIP Output and Associated Circuit Breaker

To ensure the system is ready to test, the system should only have supply power. The TRIP output will be tripped during this procedure. Also be aware that other devices connected to the trip outputs will also trip unless the connection is removed for the test.

1. Reset the AF0025. Ensure there are no trips or errors present.
2. Use a light source that can provide a light intensity of at least 3 klux for one second.
3. Observe that the connected trip coil operates.
4. Press the RESET button to reset the trip indication. Reset the tripping device if necessary.
5. Replace any connectors removed to re-establish protection.

7.4 Full Operation Test

To ensure the system is ready to test, the system should only have supply power. The TRIP output will change state during this procedure.

1. Confirm that there is a solid green LED for each connected optical sensor. This confirms that sensors are connected and healthy.
2. Confirm that a short red flashing light occurs periodically in each sensor. This indicates that the sensor circuit is being checked.
3. Move a light source greater than 3 klux towards the sensor. Confirm that the TRIP output trips and that the LEDs of the TRIP output and sensor change to red. Confirm that the correct circuit breaker(s) operate.
4. Press RESET on all affected units, and reset the tripping device if necessary.
5. Repeat steps 3 to 5 for the remaining sensors.

8 SUPPORT RESOURCES

The most up-to-date manual, data sheet, instruction videos, etc. can be found on the AF0025 site at www.littelfuse.com/AF0025.

The AF0025 is supported through the Littelfuse network of technical sales and distributors. For installation help and support, please contact your sales representative. Include detailed information about the installation and application.

8.1 Sending Information for Support

A picture or video of the installation makes it much easier to provide assistance. Include the serial number of the unit. Provide a single line diagram of the installation if possible.

9 SPECIFICATIONS

9.1 AF0025

Supply: .....4 W, 18.5 to 30 Vdc

Optical Settings:

External Sensors:..... 2 Light sensors

Sensor Types: ..... PGA-LS10-01B with sensor check

Trip Level:..... Trip above 3 klux

Intentional Trip Delay:..... 1 ms

TRIP Output:

Configuration: ..... Change-over (Form C) isolated contact

UL Rating ..... 6 A resistive 240 Vac, 6 A resistive 30 Vdc

Isolation: ..... 1,600 Vac

Supplemental Ratings:

Make/Carry 0.2 s:..... 30 A

Rating Code:..... B300, R300

Minimum Switching Load.. 100 mA, 5 Vdc

Maximum Switching Capacity.....Fig. 8

Break:

dc:..... 28 W Resistive

ac: ..... 1500 VA (PF=1.0)

360 VA (PF=0.4)

Subject to maximums of 6 A and 250 V (ac or dc)

Operating Mode:..... Shunt trip (non-fail-safe) or undervoltage trip (fail-safe), configurable

Trip Time (with 1 ms intentional delay):

Mode:

Shunt Trip (non-fail-safe):

Normally open contact: ..... < 5 ms

Normally closed contact:..... < 3 ms

Undervoltage Trip (fail-safe):

Normally open contact: ..... < 5 ms

Normally closed contact:..... < 8 ms

Error Output:

Configuration: .....Change-over (Form C) isolated contact

UL Rating:.....6 A resistive 240 Vac, 6 A resistive 30 Vdc

Isolation:.....1,600 Vac

Supplemental Ratings:

Make/Carry 0.2 s.....30 A

Rating Code:.....B300, R300

Minimum Switching Load..100 mA, 5 Vdc

Maximum Switching Capacity ..... Fig. 8

Break:

dc: .....28 W Resistive

ac: .....1500 VA (PF=1.0)

360 VA (PF=0.4)

Subject to maximums of 6 A and 250 V (ac or dc)

Operating Mode:.....Fail-Safe only

Redundant Circuit Trip Time. .....12 ms max, Shunt Trip Operation Only See Appendix B.

Terminals.....Wire Clamping, 28-12 AWG (0.08 to 2.5 mm^2) copper conductors

Tightening Torque:.....4.4 lbf·in (0.5 N·m)

Dimensions:

Height: .....113.4 mm (4.46 in)

Width: .....127.6 mm (5.02 in)

Depth:.....47.3 mm (1.86 in)

Shipping Weight: .....0.9 kg (2 lb)

Mounting: ..... 35 mm DIN rail or surface mount using two #6 screws

Environment:

Operating Temperature:.....-40 to 70°C (-40 to 158°F)

Storage Temperature: .....-40 to 70°C (-40 to 158°F)

Humidity: ..... 93% Non-condensing

Altitude:

Below 2,000 m (6,500 ft):.....24 Vdc supply only

Above 2,000 m (6,500 ft): .....24 Vdc supply only

Above 4,000 m (13,000 ft):.....Contact Littelfuse for further information.

9.2 EMC Tests

Verification tested in accordance with EN 60255-26:2023.

Radiated and Conducted Emissions:..... CISPR11:2019 CISPR32:2019

Current Harmonics and Voltage Fluctuations ..... IEC 61000-3-2 and IEC 61000-3-3 Class A

Electrostatic Discharge ..... IEC 61000-4-2 ± 6 kV contact discharge (direct and indirect) ± 8 kV air discharge

Radiated RF Immunity..... IEC 61000-4-3 10 V/m, 80-1,000 MHz, 80% AM (1 kHz) 10 V/m, 1.0 to 2.7 GHz, 80% AM (1 kHz)

Fast Transient .....IEC 61000-4-4 Zone B ± 2 kV (power supply port), ± 1 kV (all other-ports)

Surge Immunity ..... IEC 61000-4-5 Zone B ± 1 kV differential mode ± 2 kV common mode

Conducted RF Immunity ..... IEC 61000-4-6 10 V, 0.15-80 MHz, 80% AM (1 kHz)

Magnetic Field Immunity..... IEC 61000-4-8 50 Hz and 60 Hz 30 A/m and 300 A/m

Power Frequency[3] .....IEC 61000-4-16 Zone A: differential mode 100 Vrms Zone A: common mode 300 Vrms

1 MHz Burst ..... IEC 61000-4-18 ± 1 kV differential mode (line-to-line) ± 2.5 kV common mode

Voltage Interruption ..... IEC 61000-4-29 0% for 10, 20, 30, 50 ms (dc) IEC 61000-4-17 Level 4, 15% of rated dc value

Surge Withstand: .....IEEE C37.90.1-2012

9.3 Environmental Tests

Cold:..... IEC 60068-2-1:2007

Test Temperature:. .....-40°C

Duration: ..... 16 hours

Dry Heat:. ..... IEC 60068-2-2:2007

Test Temperature:..... 70°C

Duration: ..... 16 hours

Humidity: .....50% RH

Damp Heat Cyclic. ..... IEC 60068-2-30:2005

Lower Temperature:..... 25°C

Humidity Range:. ..... 95 – 100 % RH

Upper Temperature:..... 55°C

Humidity Range:. ..... 90 – 96 % RH

Number of Cycles:..... 2

9.4 Safety

Safety: .....EN 61010-1:2010/AMD1:2016/ COR1:2019
Safety Requirements for Electrical Equipment for Measurement, Control, and Laboratory Use – Part I

9.5 Certification

Certification:

CE, European Union
EMC directive 2014/30/EU: Certified to EN 60255-26:2023

Low voltage directive 2014/35/EU: Certified to EN 61010-1:2010/ AMD1:2016/COR1:2019

FCC Part 15, Subpart B, Class A – Unintentional Radiators

9.6 Sensors

	PGA-LS10-01B
Type:	Point sensor
Detection Zone: Output: Electrical Cable:	180 x 360° (half sphere) 0-35 mA Shielded 3-wire 20 AWG (0.5 mm^2) electrical cable
Factory Cable Length:	1 m (3.3 ft) electrical cable
Max. Elec. Cable Length:	50 m (164 ft)
Sensor Check:	Built-in LED for visual feedback
Dimensions:	32 x 52 x 24 mm (1.3 x 2.0 x 0.9 in)
Enclosure:	IP 30

9.7 Ordering Information

AF0025-00, Single Supply (24 Vdc)

Accessories:

PGA-LS10-01B Point Sensor

PGA-FLSH-01 Photo Flash, CE and RoHS

9.8 Related Products

AF0500 Stand-alone Arc-Flash Relay with 4 sensor inputs, 2 trip coil outputs, 2 zones

PGR-8800 Stand-alone Arc-Flash Relay with 6 sensor inputs, 1 trip coil output, current inputs

9.9 Warranty

The AF0025 Arc-Flash Relay is warranted to be free from defects in material and workmanship for a period of two years from the date of purchase.

Littelfuse will (at Littelfuse's option) repair, replace, or refund the original purchase price of an AF0025 that is determined by Littelfuse to be defective if it is returned to the factory, freight prepaid, within the warranty period. This warranty does not apply to repairs required as a result of misuse, negligence, an accident, improper installation, tampering, or insufficient care. Littelfuse does not warrant products repaired or modified by non-Littelfuse personnel.

NOTES:

1. The AF0025 uses the open source component FreeMODBUS internally. For license, version, and source-code information please contact opensource@littelfuse.com.

2. Remote-reset wiring is limited to 10 m (32 ft).

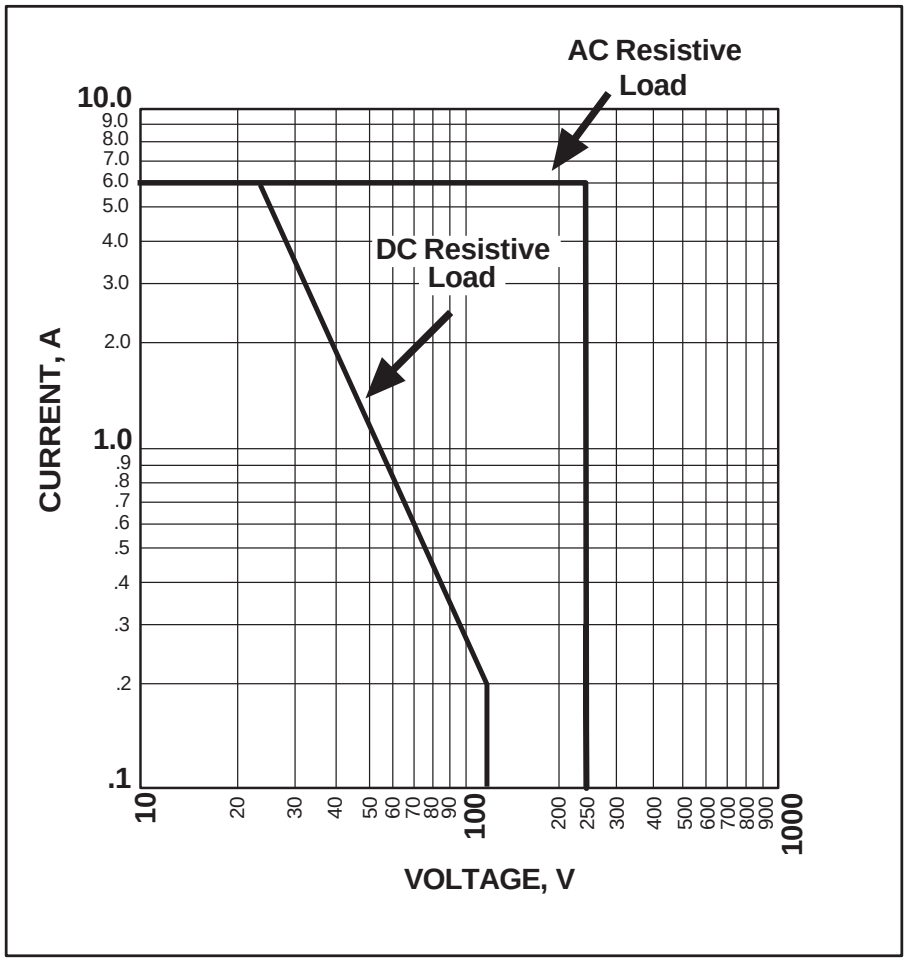

FIGURE 8. TRIP and ERROR Relays Maximum Switching Capacity.

APPENDIX A INSTALLATION LOG SHEET

GENERAL INSTALLATION SETTINGS	MIN	DEFAULT	MAX	UNIT	COMMENTS
Date Installed					
Operator					
Comment 1					
Comment 2					
GENERAL					
System Name					
Description Of This Unit		AF0025 Arc-Flash Relay			
LIGHT SENSORS					
Common Settings					
Light Immunity		3		klux	Not adjustable
Arc Detection Time Before Tripping		1		ms	Not adjustable
Light Sensor 1					
Sensor Status					☐ Sensor Present ☐ No Sensor Detected ☐ Sensor Missing ☐ Sensor Tripped
Sensor Description		Sensor 1			
Change Configuration		No Change			☐ No Change ☐ No Sensor Expected ☐ Sensor Expected
Light Sensor 2					
Sensor Status					☐ Sensor Present ☐ No Sensor Detected ☐ Sensor Missing ☐ Sensor Tripped
Sensor Description		Sensor 2			
Change Configuration		No Change			☐ No Change ☐ No Sensor Expected ☐ Sensor Expected

APPENDIX B REDUNDANT TRIP CIRCUIT DESCRIPTION

The AF0025 includes a redundant trip circuit which is active any time the CPU is not actively monitoring. Two conditions in which the CPU is not actively monitoring are during initialization (approximately 500ms following application of power) and in the extremely rare event that an internal CPU failure is detected.

When the CPU is active, it assumes control over the trip circuitry. When the CPU is inactive or initializing the AF0025 behaves as follows:

- Light Sensor Programmed Delay – the redundant trip circuit is hard wired and includes no delay, the programmed sensor delay is ignored
- Trip Relay Mode – the fail-safe/non-fail-safe setting is ignored, and the trip relay operates in shunt or non-fail-safe mode, so a trip condition causes the trip relay to be energized
- Sensor Detection – sensor detection and failure reporting is inactive, but light intensity is monitored
- RESET Input – the reset input is ignored
- RESET Button – the reset button is ignored
- ERROR Relay – the error relay is de-energized
- LEDs – all LEDs are off

NOTE: When under software control, the outputs operate in their configured operating mode (shunt trip or undervoltage trip). When controlled via redundant hardware, they are held statically as long as the sensor reports light over the threshold, and **will operate only in the shunt trip mode.**

APPENDIX C
AF0025 REVISION HISTORY

MANUAL RELEASE DATE	MANUAL REVISION	HARDWARE REVISION (REVISION NUMBER ON PRODUCT LABEL)	FIRMWARE REVISION
August 15, 2023	0-A-081523	0	1.0.1

MANUAL REVISION HISTORY

Revision 0-A-081523

Initial release.

HARDWARE REVISION HISTORY

Hardware Revision 0

Initial release.

FIRMWARE REVISION HISTORY

Firmware Revision 1.0.1

Initial release.