LEVITON®
Network Solutions

HDX Fiber Distribution Frame

A high-density fiber optic frame that prepares the data center for growth, minimizes patching footprint, reduces installation time, and saves you money.

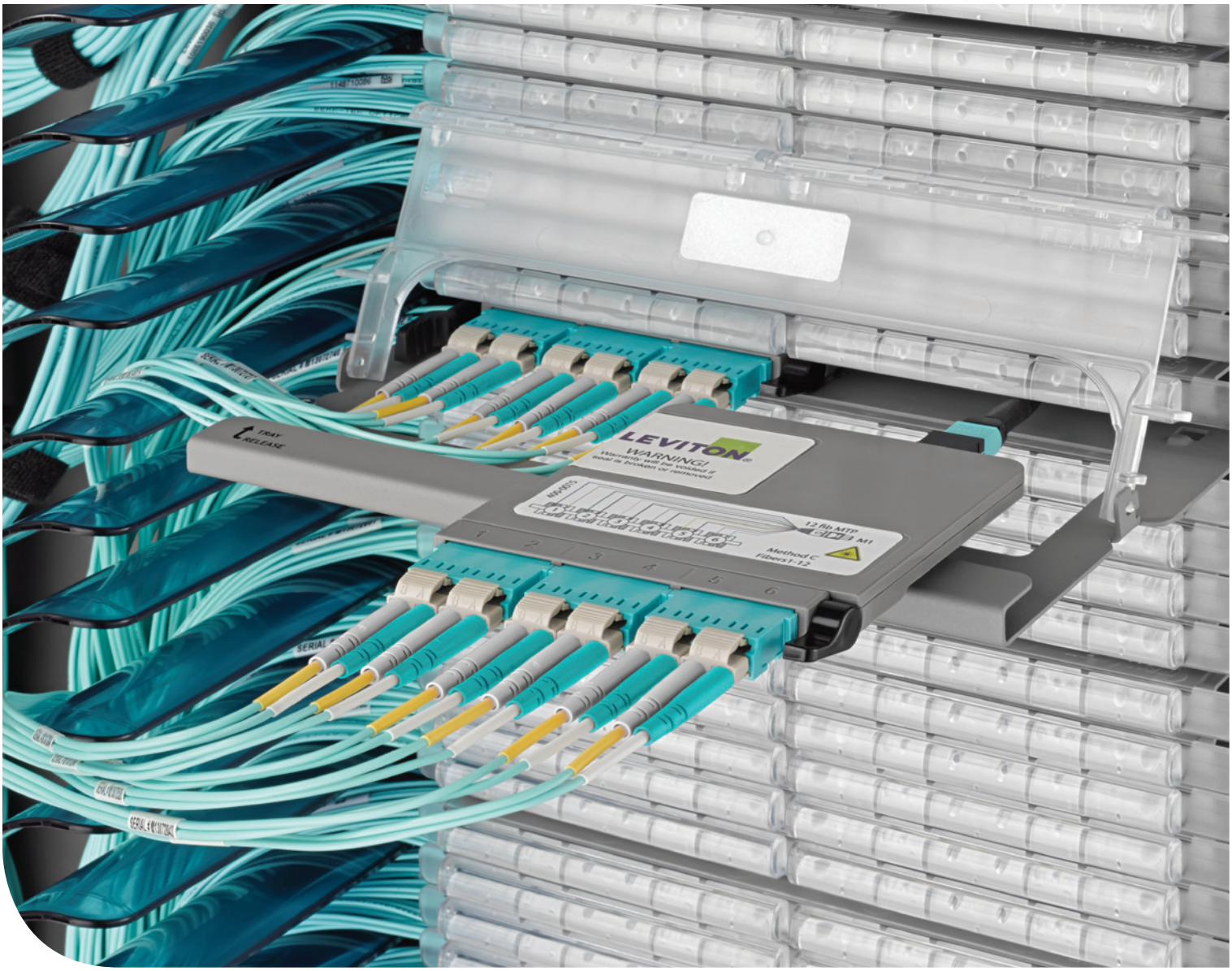

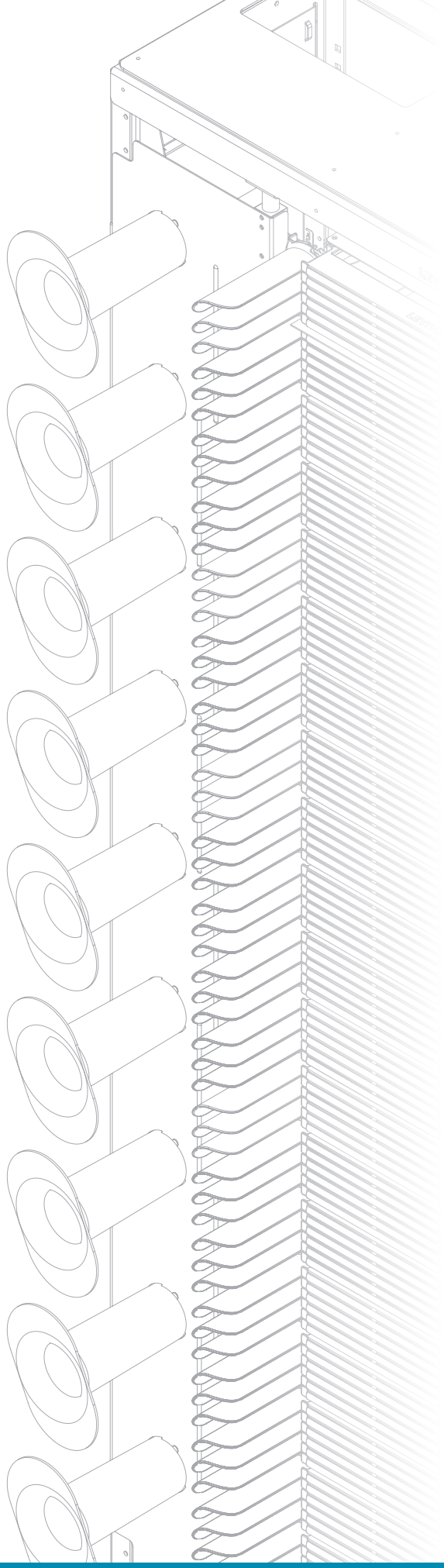

HDX

FIBER DISTRIBUTION FRAME

The Leviton high-density HDX Fiber Distribution Frame is a main cross-connect or inter-connect frame that can handle up to 3168 fibers, using LC connectors, in just one tile of floor space. Ideal for service providers, central office facilities, large enterprise, and cloud data centers, the HDX Fiber Distribution Frame will reduce your patching footprint, free up valuable space, and save you money. Separated trunk cable and patch cord management improves accessibility and enables easy moves, adds, and changes. In addition, the system is fully scalable and modular, supporting consolidation and growth.

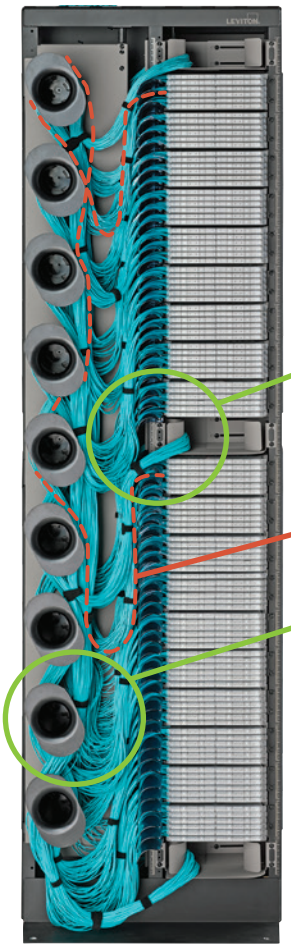

INDUSTRY-LEADING **DENSITY**

The HDX frame accomplishes such high density through its unique patch deck design. One frame holds up to 22 decks, each configured with your choice of HDX cassettes, HDX adapter plates, or injection-molded splice trays.

Maintains proper bend radius

Provides additional slack storage

Only one length of patch cord (3m) necessary for in-frame patching

BUILT-IN **CABLE MANAGEMENT & ROUTING**

The frame keeps pathways clean and organized, using integrated cable management for minimum bend radius, better slack storage, and protection within the frame. Patch decks contain patch cord and MTP® trunk routing for individual trays. And enhanced labeling improves deck and fiber identification to simplify moves, adds, or changes.

SUPERIOR **SCALABILITY**

HDX frames can be ganged together easily to handle future growth with pass-through cross-frame routing kits. And with 24-fiber MTP connectivity, they are ideal for migration from 10G to 40G to 100G and beyond.

ADDITIONAL **SECURITY**

The HDX frame includes locking rear doors to protect and conceal trunk cabling. Locking front doors (sold separately) are transparent to allow visibility.

EASY **ACCESSIBILITY**

The frame's open design greatly reduces time and labor for maintenance, as it allows unobstructed access to patch cord connections on the cassettes and adapter plates. And the one-tile footprint makes it easier to access the space beneath a raised floor.

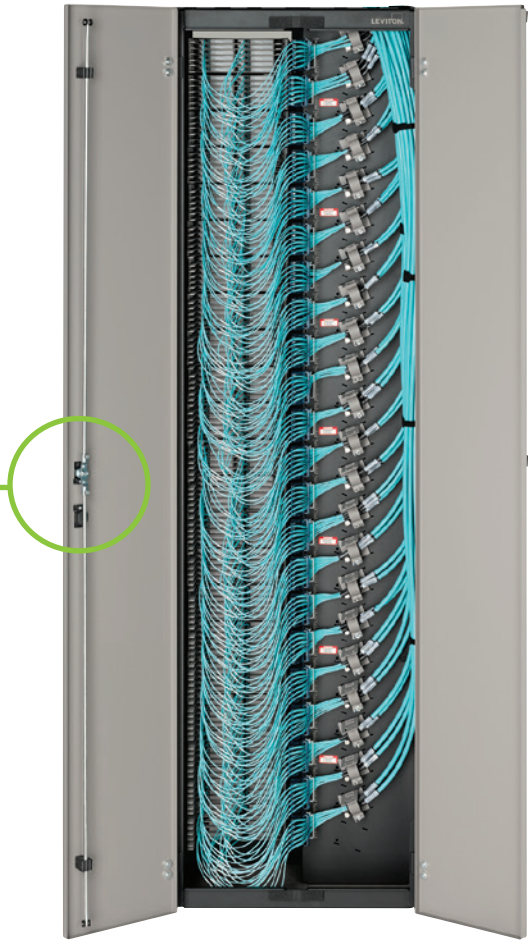

Data center infrastructure standards like TIA-942 recommend driving all network cabling back to patching in the main distribution area, or MDA. Following these standards, the HDX frame is designed to be installed in the MDA, serving as the main cross-connect patching location for all fiber channels in the data center. It can support cabling from network servers, core switches, the SAN, mainframe, and disk or tape storage.

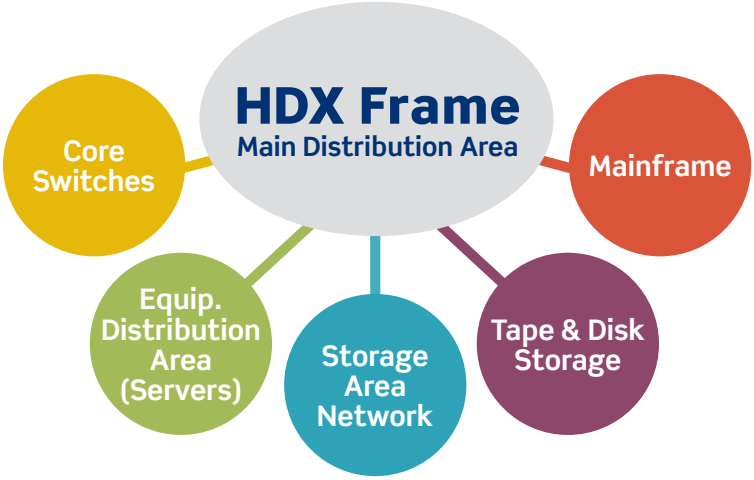

HDX FRAME CAPACITY CHART (Based on use of 48-fiber trunks)	
CONNECTIVITY	MAX. FIBER STRANDS
LC	3,168
SC	1,584
12-Fiber MTP®	7,776
24-Fiber MTP®	15,552

The HDX Frame consolidates patching for all fiber channels in the data center into an incredibly small footprint. Since it doesn't require the use of standard 19-inch cabinets, which often require additional width and depth, it uses less space for patching.

By reducing overall floor-space requirements, the HDX frame creates significant yearly cost savings.

Examples of **Yearly Savings** with the **HDX Frame**

* Assumes typical cabinet is 48" D x 32" W, 42RU (36U usable)
Estimated data center cost per month per square foot is $50

Example 1: Small-to-Medium Data Center

Zones in DC	Total Number of Cabinets	Total Number of Devices	Total Number of Channels
Server Cabinets, SAN, Core Switch, other	80	3	1,328

Traditional vs HDX Frame

Traditional MDA			
RU Required	Number of Cabinets	Sq. Ft.	First Year Cost
176	5	53.4	$32,010

HDX Frame MDA			
Decks Required	Number of HDX Frames	Sq. Ft.	First Year Cost
46	3	10.5	$6,300

SAVINGS with the **HDX Frame**

Percent	Sq. Ft.	First Year Savings
408%	42.9	**$25,710**

Calculate your Yearly Savings at **apps.leviton.com/hdxcalculator**

Example 2: Large Data Center

Zones in DC	Total Number of Cabinets	Total Number of Devices	Total Number of Fiber Channels
Server Cabinets, Network Switches, SAN, Storage, Tape	150	12	16,536

Traditional vs HDX Frame

Traditional MDA			
RU Required	Number of Cabinets	Sq. Ft.	First Year Cost
702	20	213.4	$128,040

HDX Frame MDA			
Decks Required	Number of HDX Frames	Sq. Ft.	First Year Cost
258	12	48.0	$25,200

SAVINGS with the **HDX Frame**

Percent	Sq. Ft.	First Year Savings
408%	171.4	**$102,840**

Calculate your Yearly Savings at **apps.leviton.com/hdxcalculator**

A

B

C

D

E

F

G

1x12 MTP® Fiber to 12-Fiber LC Cassette

2x24 MTP Fiber to 6x8 MTP Fiber Cassette

FIBER DISTRIBUTION FRAME

- Integrated cable management and routing solutions for minimum bend radius, better slack storage, and protection
- Holds up to 22 decks; each can be configured with cassettes, adapter plates, or splice trays
- Lockable rear doors included to protect and conceal trunk cabling
- Optional front doors (sold separately) are transparent on one side and lockable for additional security
- Occupies only one 2-foot square tile
- Seismic certified to GR-63-CORE, Zone 4, and cULus 2416 Listed

PATCH DECK

- Modular 3.5-inch deck accepts up to 144 fibers (using LC) capacity
- Holds 6 independent sliding and removable trays and accepts up to 12 MTP® cassettes or adapter plates
- Magnifying port identification label holders for better visibility
- Integrated minimum bend radius protection

SPLICE DECK

- Modular 3.5-inch-high deck accepts up to three independent splice trays
- Sliding trays are removable for ease of splicing
- Heat-shrink fusion splicing of individual 250 µm or 900 µm tight-buffer fibers for up to 144 fibers per deck
- Mass ribbon fusion splicing available as custom order

HDX ADAPTER PLATES

- Connect to field-terminated backbone cabling or pre-terminated trunks
- Easy one-hand installation and removal
- Offered in OM1/OM2, OM3/OM4, and OS2 fiber types
- LC, SC, and MTP styles in 6, 12, or up to 72/144-fiber configurations are available
- Visible sequential numbering to identify ports (for Tx and Rx)
- HDX plates are also compatible with Opt-X® HDX Rack Enclosures

HDX MTP CASSETTES

Make to order! leviton.com/configurator

- 12- or 24-fiber MTP configurations
- Select from LC or MTP connectors for 10G, 40G, or 100G applications
- Configure up to 48 fibers for 24 channels (10G) and 6 channels (40G)
- Easy to migrate from 10G to 40/100G when used with Opt-X® Unity trunks, harnesses, or patch cords
- Pre-terminated fiber eliminates the need for complicated field terminations and splices
- A variety of fiber types are available including single-mode, multimode, and laser-optimized multimode
- Easy, one-hand installation and removal
- HDX cassettes are also compatible with Opt-X HDX and UHDX Enclosures

HDX FIBER OPTIC DISTRIBUTION FRAME		
DESCRIPTION		PART NO.
[A]	Fiber Distribution Frame, 7' H x 2' W x 2' D	F3168-22F*
[B]	Patch Deck, 2RU, empty (includes horizontal cable management and cable clamp kit)	F3168-DCK
[C]	Splice Deck, 2RU, empty (includes horizontal cable management and cable clamp kit)	F3168-SPD
[D]	Cross-Frame Routing Kit	F3168-CFR
[E]	Front Doors Kit	F3168-FDR*
	Cable Clamp Kit (for additional fiber trunks)	F3168-CCK
	Seismic Zone 4 Kit	F3168-EQK
	2RU Blank Panel (for frame)	F3168-BLK
HDX ADAPTER PLATES		
	Adapter Plate, OM1 & OM2, Quad LC (Beige), 12 fibers, phosphor bronze sleeve	5FUHD-2IL
[F]	Adapter Plate, OM3 & OM4, Quad LC (Aqua), 12 fibers, zirconia ceramic sleeve	5FUHD-2QL
	Adapter Plate, OS2, Quad LC (Blue), 12 fibers, zirconia ceramic sleeve	5FUHD-2LL
	Adapter Plate, OM1 & OM2, Duplex SC (Beige), 6 fibers, phosphor bronze sleeve	5FUHD-6IC
	Adapter Plate, OM3 & OM4, Duplex SC (Aqua), 6 fibers, zirconia ceramic sleeve	5FUHD-6QC
	Adapter Plate, OS2, Duplex SC (Blue), 6 fibers, zirconia ceramic sleeve	5FUHD-6LC
	Adapter Plate, 3 Duplex MTP Adapters (Black), key up/key up	5FUHD-6MB
[G]	Adapter Plate, 3 Duplex MTP Adapters (Black), key up/key down	5FUHD-6MP
	Adapter Plate, blank (Black)	5FUHD-BLK
	24-fiber Heat Shrink Style Molded Splice Tray (includes 60 mm splice sleeves)	T5PLS-24F

* Items do not qualify for prepaid freight program

Make to order! HDX FRAME OPTIONS

# OF PATCH DECKS	# OF CASSETTES OR ADAPTER PLATES PER PATCH DECK	FIBER COUNT	FIBER TYPE	CASSETTE/PLATE CONNECTOR TYPE (FRONT)	CASSETTE/PLATE CONNECTOR TYPE (REAR)	CASSETTE POLARITY	FRONT DOORS KIT
• 1-22	• 1-12	• 12 • 24 • 48	• OM2 • OM3 • OM4 • OS2	• LC • SC • MTP	• LC (Plate) • SC (Plate) • MTP (Plate) • 12-Fiber MTP • 24-Fiber MTP	• Method A • Method B, Core • Method B, Edge • Method C	• Yes • No

Make to order! HDX FRAME PATCH DECK OPTIONS

# OF CASSETTES OR ADAPTER PLATES PER DECK	CASSETTE FIBER COUNT	FIBER TYPE	CASSETTE/PLATE CONNECTOR TYPE (FRONT)	CASSETTE/PLATE CONNECTOR TYPE (REAR)	CASSETTE POLARITY
• 1-12	• 12 • 24 • 48	• OM2 • OM3 • OM4 • OS2	• LC • SC • MTP	• LC (Plate) • SC (Plate) • MTP (Plate) • 12-Fiber MTP • 24-Fiber MTP	• Method A • Method B, Core • Method B, Edge • Method C

Make to order! HDX MTP CASSETTE OPTIONS

FIBER TYPE	FIBER COUNT	CONNECTOR TYPE (FRONT)	MTP TYPE (REAR)	POLARITY
• OM2 • OM3 • OM4 • OS2	• 12 • 24 • 48	• LC • MTP	• 12-Fiber MTP • 24-Fiber MTP	• Method A • Method B, Core • Method B, Edge • Method C

For Method B polarity, you must order one each of the Core and Edge cassettes.

For assistance customizing your cassettes, please visit leviton.com/configurator or call Tech Support at 800.824.3005.

Make to order! leviton.com/configurator

LEVITON®
Network Solutions

THE SMART CHOICE FOR A BETTER NETWORK

High-performance connectivity backed by the industry's best service and support

We invent the industry's best technologies. We build them to last. And we stand behind every product and every installation – delivering industry-leading performance and unbeatable service and support – throughout the life of your structured cabling system. Add in the peace of mind that comes from working with a stable, century-old supplier and you get far and away the highest return on investment in the industry.

Leviton Network Solutions Division Headquarters
leviton.com/networksolutions
2222-222nd Street S.E., Bothell, WA 98021 USA

Inside Sales
T 800.722.2082
E insidesales@leviton.com

Technical Support
T 800.824.3005 / +1.425.486.2222
E appeng@leviton.com

International Inside Sales
T +1.425.486.2222
E intl@leviton.com

Leviton Corporate Headquarters
leviton.com
201 N. Service Road, Melville, NY 11747 USA

Customer Service
T 800.323.8920 / +1.631.812.6000
E customerservice@leviton.com

Leviton International Offices

Asia / Pacific
T +1.631.812.6228
E infoasean@leviton.com

China
T +852.2774.9876
E infochina@leviton.com

India / SAARC
T +971.4.886.4722
E infoindia@leviton.com

Middle East & Africa
T +971.4.886.4722
E lmeinfo@leviton.com

Canada
T +1.514.954.1840
E pcservice@leviton.com

Colombia
T +57.1.743.6045
E infocolombia@leviton.com

Latin America
T +52.55.5082.1040
E lsamarketing@leviton.com

South Korea
T +82.2.3273.9963
E infokorea@leviton.com

Caribbean
T +1.954.593.1896
E infocaribbean@leviton.com

Europe
T +33.6.8869.1380
E infoeurope@leviton.com

Mexico
T +52.55.5082.1040
E lsamarketing@leviton.com

All Other International Inquiries
E international@leviton.com

twitter YouTube

YOU MIGHT ALSO BE INTERESTED IN...

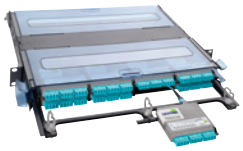

Opt-X® HDX Enclosure System

The HDX System features compact cassettes and adapter plates that fit into high-density enclosures, creating a scalable platform for enterprise and data center applications.

Overhead Infrastructure Platform

A full overhead support for cabling pathways, power, lighting, and other infrastructure. Platforms can carry the load of cables and ladder trays while freeing up rack space by adding patching above cabinets or racks.

Premium Patch Cords & Pigtails

Premium Series Patch Cords and Pigtails feature advanced polishing and assembly techniques, with insertion loss and return loss tested to industry-leading standards.

Pre-terminated Trunk Cables

Leviton MTP® trunks using Berk-Tek Micro Data Center Plenum (MDP) cable provide the highest density backbone connectivity available.