VOLUME V: DURAPLUS™ AIR-LINE SYSTEM

Industrial Technical Manual Series

FOURTH EDITION

DURAPLUS™ AIR-LINE SYSTEM

A lightweight corrosion resistant compressed air distribution system from IPEX

IPEX by aliaxis

IPEX Duraplus™ Air-Line

Industrial Technical Manual Series

Vol. V, 4th Edition

© 2018 by IPEX. All rights reserved. No part of this book may be used or reproduced in any manner whatsoever without prior written permission. For information contact: IPEX, Marketing, 1425 North Service Road East, Unit 3, Oakville, Ontario, Canada, L6H 1A7

The information contained here within is based on current information and product design at the time of publication and is subject to change without notification. IPEX does not guarantee or warranty the accuracy, suitability for particular applications, or results to be obtained therefrom.

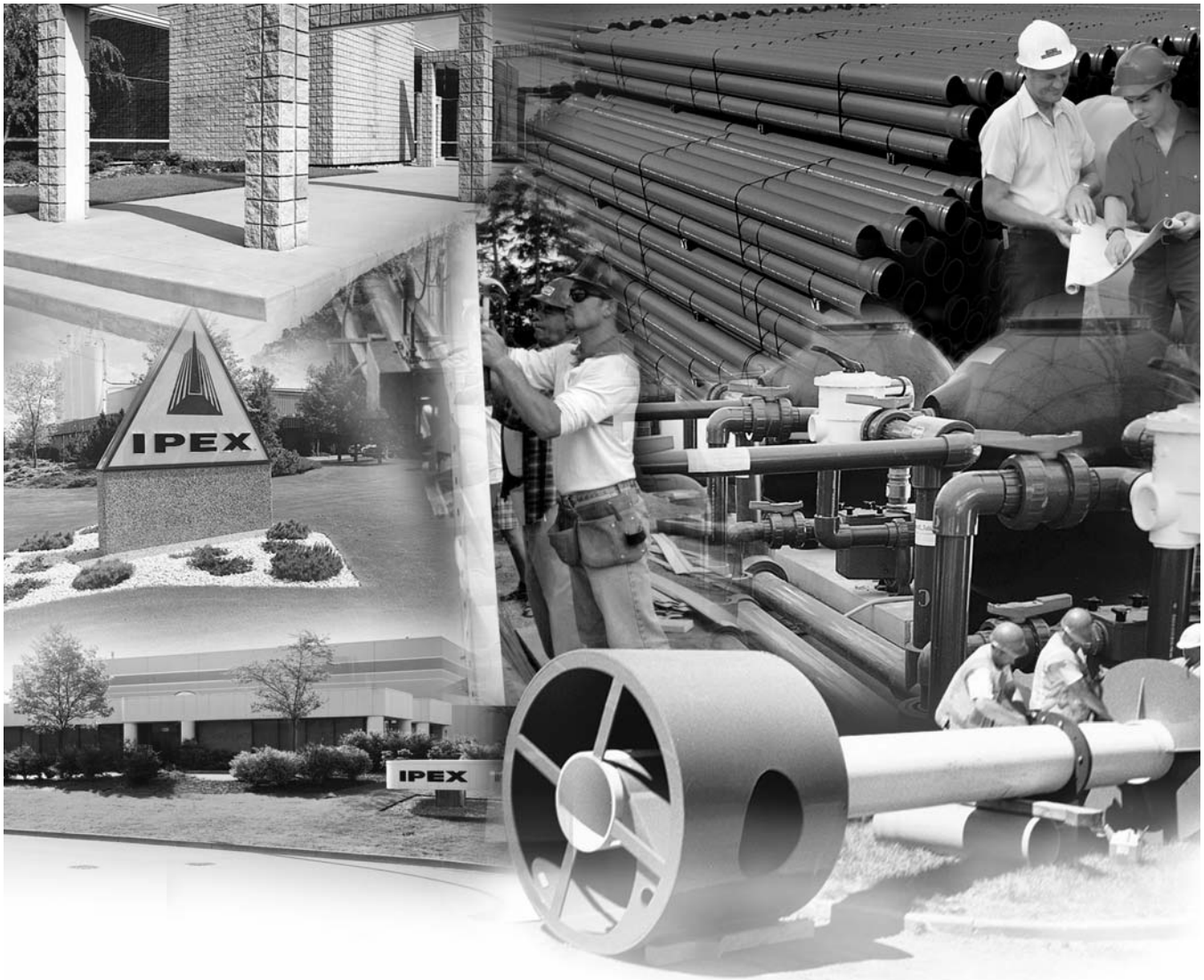

ABOUT IPEX

At IPEX, we have been manufacturing non-metallic pipe and fittings since 1951. We formulate our own compounds and maintain strict quality control during production. Our products are made available for customers thanks to a network of regional stocking locations throughout North America. We offer a wide variety of systems including complete lines of piping, fittings, valves and custom-fabricated items.

More importantly, we are committed to meeting our customers' needs. As a leader in the plastic piping industry, IPEX continually develops new products, modernizes manufacturing facilities and acquires innovative process technology. In addition, our staff take pride in their work, making available to customers their extensive thermoplastic knowledge and field experience. IPEX personnel are committed to improving the safety, reliability and performance of thermoplastic materials. We are involved in several standards committees and are members of and/or comply with the organizations listed on this page.

For specific details about any IPEX product, contact our customer service department (contact information is listed on the back cover).

SAFETY ALERTS

AREAS OF USE

Duraplus® Air-Line must be used downstream from the receiver or aftercooler only.

Care must be taken to avoid overheating Air-Line. Metal pipe must be used between compressor and receiver and at any other part of a system where conditions exceed those permissible for Air-Line.

Air-Line should not be connected directly to vibrating machinery. Flexible couplings should be incorporated to absorb vibrations.

INSPECTION AND TESTING

After installation, the Air-Line system must be inspected for external damage in the form of cuts or deep notches. Any such damaged areas must be cut out and replaced.

The normal precautions for testing a compressed air system before pressurizing must be followed for the Air-Line system.

Anaerobic thread sealants (e.g. Loctite, 542, 572) can chemically attack Air-Line and must not be used.

INSTALLATION PRECAUTIONS

Duraplus Air-Line pipe must not be threaded.

Lubricators must only be installed at the downstream extremities of the system.

Air-Line must not be bent. Standard elbows and molded bends are available throughout the size range.

Certain types of flexible hoses contain plasticizers which are harmful to Air-Line piping. Therefore the suitability of hoses which are to be installed upstream of the Air-Line system must be checked with IPEX prior to installation.

Purge new compressors and ancillary equipment, including new steel piping, prior to connecting to the Air-Line system.

WARNING

IPEX cannot accept responsibility for accidents arising from the misuse of their products because of incorrect design, installation or application.

Unless the procedures and recommendations set out in this manual have been strictly adhered to, all warranties are null and void.

COMPRESSOR OILS

Air-Line is ideally suited to clean air applications. **Where air is not free from oil, IPEX must be consulted prior to installation concerning the suitability of the compressor oils to be used.**

Note that synthetic oils are generally not compatible with Air-Line and must not be used with the system. Certain additive rich mineral oils are also incompatible with the system.

As a safeguard, IPEX has produced oil warning labels for attachment to the compressor. These are available upon request. A reduced copy of the label is shown below.

U.V. LIGHT

Care should be taken to avoid prolonged exposure to sunlight, which will cause discolouration of the Duraplus Air-Line material. If stored outdoors, products must be underneath an opaque covering, e.g. a tarpaulin.

If installed in a location exposed to sunlight, the pipework should be painted.

WARNING

Certain compressor and lubricating oils will damage your Duraplus Air-Line installation

Before using any oils in the system, contact IPEX to obtain a list of recommended oils or to confirm individual oil suitability.

CDN (866) 473-9462 U.S. (800) 463-9572

NOTES

Contents

Duraplus™ Air-Line Manual
About IPEX
Safety Alerts . . . . . *i*

Section One: General Information
Overview 1
Features & Benefits 1
Applications 2

Section Two: Material Description
The Material 3
The System 3
Joining 3
Operational Range 4
Mode of Failure 4
Compressor Oil Selection 4

Section Three: Design Data
Design Considerations 5
Pressure Ratings 6
General Considerations for Piping System Design 7
Contaminants 7
Pipe Sizing
Pipe Sizing – Main Lines 8
Pipe Sizing – Branch Lines 9
Pressure Drops in Fittings 9

Section Four: Handling and Installation
Storage On-Site 11
Z-Length Installation Method 11
Installation Techniques 12
Installation Methods 12
Pipe Supports 12
Support Design 12
Joining Methods 13
BSPT & NPT Pipe Thread 13

Quick-Release Coupling Connections 15
Thermal Expansion 16
Pipe Flexibility 18
Joining Methods 23
Handling and Installation 24

Section Five: Dimensions Data 25

Section Six: Specifications
Sample Specifications 35

Appendix A: Conversion Charts 37

SECTION ONE: GENERAL INFORMATION

OVERVIEW

Compressed air, a major source of industrial energy, is being used increasingly in both the manufacturing and processing industries. There, its distinct advantages of cleanliness, flexibility, safety and economy of use (compared with other energy sources) are fully exploited.

Modern process equipment, pneumatic controls and instrumentation demand a supply of clean, uncontaminated air and this has prompted the development in recent years of more advanced designs of compressors and ancillary equipment.

Duraplus Air-Line is manufactured from a specially formulated Acrylonitrile Butadiene Styrene (ABS) blend that has a high performance co-extruded liner which greatly enhances its mechanical and chemical properties. Duraplus fittings are manufactured using an alloy blend of ABS and the liner material, ensuring high performance of the whole system.

FEATURES AND BENEFITS

Safety

The Butadiene component of Duraplus Air-Line contributes resistance to accidental damage and prevents material fracture should the pipe be subjected to severe impact. Duraplus has been designed and tested to withstand impact for a large range of temperatures and has a design life of 30 years with a factor of safety of 2:1.

Wide Range of Applications

The advanced liner and ABS material combination protects against stray chemicals which may sometimes cause problems for ordinary systems. Duraplus Air-Line is compatible with many compressor lubricants.

Low Installation Costs

Duraplus Air-Line pipe reduces costs on a typical installation not only for materials but also for labor and transportation costs when compared to traditional materials. The reason? Its lightweight construction and simple assembly procedures. Like all thermoplastics, Duraplus is easly handled, stored,cut, joined and installed. As a result, project costs for installed Duraplus systems are significantly lower. Requirements for heavy installation equipment are also eliminated.

Clean

Duraplus products are packaged to protect the surface finish of the pipe and fittings and to prevent contamination before use. The smooth liner of Duraplus Air-Line cannot rust, corrode or form loose scale, ensuring air remains clean throughout the life of the system.

Smooth Interior

Less friction means lower pressure drops and higher flow rates allowing for smaller pipe diameters to be used in some cases.

Ease of Use

Duraplus Air-Line is one sixth the weight of steel and can be joined by solvent welding for easy on-site modifications and repairs without requiring special training or equipment.

Leak Free System

Correctly made solvent welded joints are leak free and can greatly reduce running costs.

Metric Sized & Colour Coded

Duraplus Air-Line is metric sized to prevent mixing with I.P.S. sized PVC and CPVC piping. Also the Duraplus Airline is colour coded blue to comply with the ISO standards for compressed air products.

Proven

From manufacturing to the marketplace, Durplus Air-Line is supported by the technical experience gained through over 30 years of thermoplastic pressure piping production. Both raw material and finished Duraplus Air-Line products are subjected to rigorous tests, including aging, weathering and stressed environmental tests, to ensure complete system integrity over the designed operating life.

This manual serves to outline the design and installation techniques required to achieve a safe, high-integrity system. Further detailed advice can be obtained from our Customer Service Department.

APPLICATIONS

- Plant Air
- Food and beverage – CO_2 delivery
- Ventilation
- Valve actuation

SECTION TWO: MATERIAL DESCRIPTION

The Material

Acrylonitrile-Butadiene-Styrene (ABS) is a broad family of engineered thermoplastics with a range of performance characteristics.

The copolymeric system can be blended to yield the optimum balance of properties suited to compressed air applications. Acrylonitrile imparts chemical resistance and rigidity. Butadiene endows the product with impact strength and toughness, while Styrene contributes to ease of processing.

The formulation used by IPEX for Air-Line has been selected to optimize performance in respect of tensile strength, toughness, ductility, heat stability and processability – from raw material to finished product. These properties make it particularly suitable for conveying compressed air.

In addition, the material has good chemical resistance and is easily joined by solvent welding, which allows fast system assembly and modification.

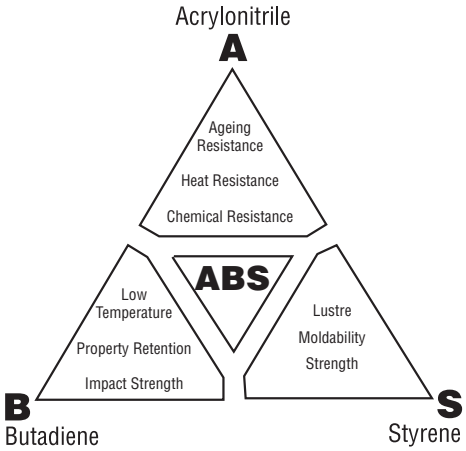

The System

Advanced manufacturing techniques allow the formation of a liner layer to be permanently fused with the ABS layer during the extrusion process. The liner is a high performance copolymeric material which offers extra strength and an unrivalled level of chemical resistance.

Fittings are produced in an alloy blend of ABS and the liner material, which has been carefully balanced to achieve a performance improvement equivalent to the new pipe.

Duraplus Air-Line offers resistance to stray aggressive substances which may contaminate compressed air pipelines and cause problems for other thermoplastic materials. Though Duraplus Air-Line is resistant to a large variety of stray aggressive substances it may suffer stress attack if exposed to some compressor oils.

Always consult IPEX for chemical compatibility recommendations.

Joining

All socket fittings are joined by solvent welding using Duraplus Air-Line cement. This cement has been specifically formulated for maximum joint efficiency, therefore no other cement should be used.

In addition to socket fittings, threaded adapter fittings are available in the smaller sizes for connecting to filters, regulators, lubricators, quick release couplings and other terminal connections or equipment. IPEX recommends the use of Teflon tape for making threaded connections. Pastes may cause stress cracking of the threaded joint.

Air-Line pipe must never be threaded.

Both pipe and fittings are manufactured from a copolymeric pressure piping material – acrylonitrile butadiene styrene (ABS). They are capable of withstanding a continuous working pressure of 185psi at 73ºF (1275KPa at 23ºC) in accordance with ASTM D2282.

The outside diameters of the pipe comply with the dimensional requirements of DIN 8062, and ISO 161/1. The socket sizes of the fittings conform with the dimensional requirements of DIN 8063 and ISO 727.

The sockets of the fittings have a 0.50º taper, the diameter decreasing from the opening to the stop.

The table below shows the socket dimensions in inches for the whole range of fittings.

O_D	=	Nominal Pipe outside diameter
A	=	Minimum socket depth
B	=	Socket diameter at mid-point of socket depth

O_D		A		B Min		B Max	
(mm)	(in)	(mm)	(in)	(mm)	(in)	(mm)	(in)
20	1/2	16.002	0.630	20.091	0.791	20.295	0.799
25	3/4	18.491	0.728	25.095	0.988	25.298	0.996
32	1	21.996	0.866	32.016	1.264	32.309	1.272
50	1-1/2	31.013	1.221	50.089	1.972	50.292	1.98
63	2	37.490	1.476	63.094	2.484	63.297	2.492
90	3	51.003	2.008	90.094	3.547	90.297	3.555
110	4	61.011	2.402	110.109	4.335	110.312	4.343

Operational Range

The Air-Line system is designed for a maximum continuous service pressure of 185psi at 73ºF (1275kPa at 23ºC).

Any increase in working temperature above 73ºF (23ºC) will require a corresponding reduction in pressure rating as detailed on page 6. For example, at 120ºF (49ºC), the system is derated to 115psi (793kPa).

Mode of Failure

Duraplus Air-Line is made from a ductile material whose mode of failure resembles that of soft copper. Failure is by ductile distortion and tearing.

In contrast, the failure of rigid materials, (PVC, CPVC, etc.) is accompanied by rapid crack propagation and hazardous material fragmentation. The resulting explosion when conveying compressed air can be catastrophic and could cause injury. Unplasticised, rigid plastic piping must never be used for compressed gas conveyance.

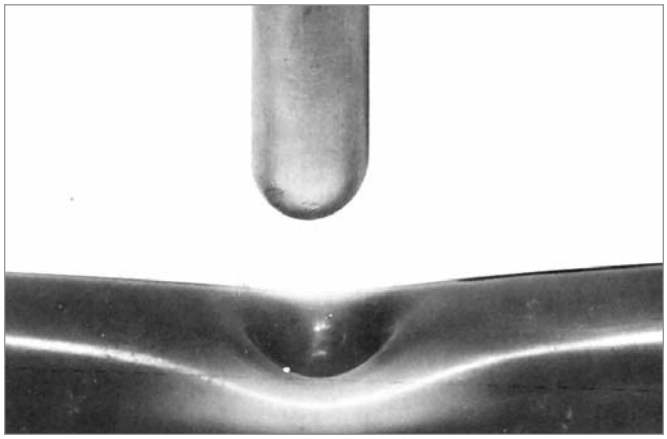

Standard pipe impact test showing Air-Line ductility.

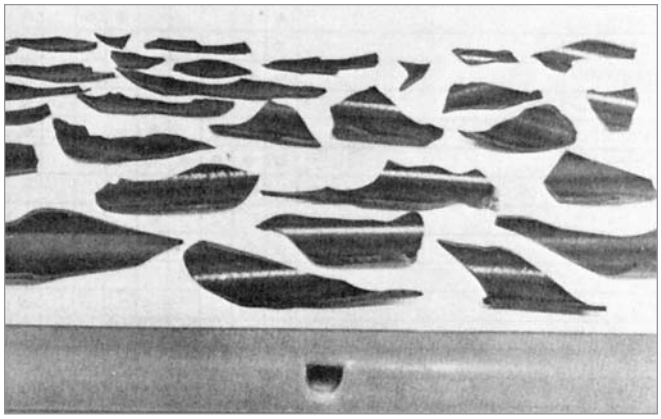

Localized ductile failure of Duraplus Air-Line pipe sample in foreground, compared with explosive, failure of PVC pipe. (Both samples charged to 80psi (552kPa) with compressed air.)

Compressor Oil Selection

Air-Line is ideally suited to clean air applications and in systems, required to be free of oil.

Where compressors are selected that are not of the 'oil free' design, varying amounts of compressor lubricant will be discharged from the compressor into the downstream piping and equipment. The amount of oil discharged in the system will depend on the type, manufacture and age of the compressor selected.

Compressors can normally operate with either synthetic or mineral oil lubrication. Synthetic oils can damage seals, polycarbonate lubricator bowls and other elastomeric components and care should be taken in their selection. Air-Line can be similarly affected.

It should be carefully noted that synthetic oils, except for a select few, are incompatible with Air-Line and must not be used with the system – otherwise permanent damage will result. Certain additive rich mineral oils are also incompatible with the system.

Compressor oils should therefore always be checked with IPEX for compatibility with Air-Line before beginning installation.

Make certain that proper cleaning procedures are followed if the compressor lubricant needs to be changed. It is essential that the Duraplus cleaning guidelines are followed. Please contact IPEX for details.

SECTION THREE: DESIGN DATA

DESIGN CONSIDERATIONS

Size Range

IPEX offers a comprehensive range of pressure piping and matched precision molded fittings in the following metric sizes:

mm	20	25	32	50	63	90	110
inch	1/2	3/4	1	1-1/2	2	3	4

This equates to an equivalent range of 1/2" to 4" nominal diameter (see below size comparison table). For pipe sizes above 4" NPS (110mm), contact IPEX technical services.

Product Range Dimensions

The table below shows the nearest equivalent IPS sizes of galvanized mild steel piping, plus weight comparisons.

Note: Metric/Imperial conversion charts are located in Appendix A.

Nominal Size		Air-Line 185psi (1275kPa)						Galvanized Mild Steel, Sch 40					
		OD		ID		Weight		OD		ID		Weight	
in	(mm)	in	(mm)	in	(mm)	lbs/ft	(kg/m)	in	(mm)	in	(mm)	lbs/ft	(kg/m)
1/2	20	0.790	20.0	0.622	15.8	0.090	0.130	0.840	21.3	0.622	15.8	0.980	1.450
3/4	25	0.990	25.0	0.800	20.2	0.120	0.180	1.050	26.7	0.824	20.9	1.280	1.900
1	32	1.260	32.0	1.030	26.2	0.190	0.280	1.315	33.4	1.049	26.6	2.000	2.970
1-1/2	50	1.970	50.0	1.610	41.0	0.460	0.690	1.900	48.3	1.610	40.9	2.960	4.430
2	63	2.480	63.0	2.030	51.6	0.730	1.090	2.375	60.3	2.067	52.5	4.150	6.170
3	90	3.550	90.0	2.910	74.0	1.500	2.230	3.500	88.9	3.068	77.9	6.790	10.100
4	110	4.340	110.0	3.550	90.2	2.210	3.310	4.500	114.3	4.026	102.3	9.680	14.400

PRESSURE RATINGS

Duraplus Air-Line is designed for a maximum continuous working pressure of 185psi at 73ºF (1275kPa @ 23ºC) for 30 years.

This pressure must not be continuously exceeded or a reduced service life will result.

Transient increases in pressure can be tolerated up to a maximum of 10% over the maximum continuous pressure at a given temperature.

For increased compressed air temperatures, the pressure rating of Air-Line should be correspondingly reduced, as indicated on the graph. For example, at 120ºF (49º) the system can be operated continuously up to 115psi (793kPa) internal pressure.

NOTES:

1. Graph is based on an ambient temperature of 73ºF (23ºC).
2. For higher ambient temperatures, decrease the working pressure by 5% for every 20ºF (11ºC) above 73ºF (23ºC) ambient.
3. Generally compressed air systems must not be used at temperatures below 40ºF (4ºC) or in excess of 120ºF (49ºC). For applications outside these parameters consult IPEX's Customer Service Department.

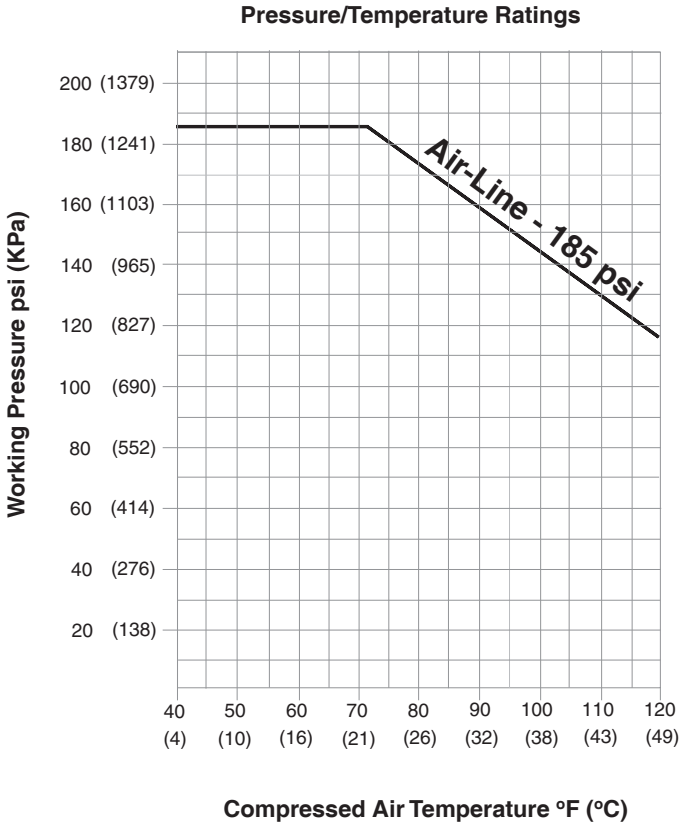

GENERAL CONSIDERATIONS FOR PIPING SYSTEM DESIGN

A compressed air system must be controlled, regulated, and sized to ensure that an adequate volume of air, at a specific pressure and purity, will satisfy user requirements during the period of heaviest use.

Overview of Design

1. Locate each process, work station, or piece of equipment that uses compressed air. They should be located on a plan, and a complete list should be made to simplify record keeping. This initial process will act as a beginning for your piping layout.
2. Determine the volume of air and pressure range used at each location. Information regarding pressure and flow rates for equipment such as tools can be obtained from the manufacturer. If the pressure and flow rates are not known, assign some preliminary rates until the specific values can be obtained.
3. Determine the system conditioning requirements for each piece of equipment. This includes the allowable moisture content, particulate size, and oil content. The system may require conditioning equipment including dryers, filters, lubricators and pressure regulators.
4. Establish how much time the individual tool or process will be in actual use for a one-minute period of time. This is referred to as the "duty cycle." In most industrial applications, tools or operations of a similar nature are usually grouped together.
5. Establish the maximum number of locations that may be used simultaneously on each branch, on each main, and for the project as a whole. This is known as the "use factor."
6. Establish the extent of allowable leakage. Leakage is a result of the number and type of connections, the use of disconnects, the age of the system and the quality of the initial assembly process. Many small tools and operations will result in more leakage than fewer larger applications. A well maintained compressed air system will have an allowable leakage rate of 2% to 5%.

   Note: This allowable leakage rate applies only to compressed air made on site. All other inert gas systems must be designed with the strictest health and safety considerations in mind including preventing leakage of any pipe contents.
7. Establish any allowance for future expansion. Thought should be given to oversizing some components (i.e., main supply lines) to avoid the cost of replacement at a later date.
8. Make a preliminary piping layout and assign a preliminary pressure drop for the system.
9. Select the air compressor type, conditioning equipment, equipment location, and air inlet, making sure that scfm (L/min) is used consistently for both the system and compressor capacity rating.

To start, the following information must be available:

- Total connected flow rate cfm (L/min) of all air-using devices, including flow to the air dryer system if applicable.
- Maximum pressure (psi) all air-using devices require.
- Duty cycle and use factors for these devices giving maximum expected use of air.
- Leakage and future expansion allowance, cfm (L/min).
- Allowable pressure drops for the entire system, including piping and conditioning equipment.
- Altitude, temperature, and contaminant removal corrections.
- Location where adequate space is available for air compressor and all ancillary equipment.
- Produce a final piping layout and size the piping network.

Contaminants

An understanding of the various pollutants in the air is helpful when an engineer has to decide what equipment is required to effectively reduce or remove them. The required level of protection from the various contaminants depends upon the purpose for the air. Prior to the selection of equipment, the performance criteria for each system, along with the identity and quantity of pollutants, must be determined.

There are four general classes of contamination:

1. Liquids (oil and water)
2. Vapor (oil, water, and hydrocarbons)
3. Gas
4. Particulates

PIPE SIZING

Pipe Sizing – Main Lines

The compressed air mains are the all-important link between the compressor and the point of use. Correct sizing of the piping system for both current and future demand is essential to maximize the cost-effectiveness of the system. Piping pressure drops are totally unrecoverable, a complete waste of energy and should be kept to an absolute minimum.

Mains that are too small will also cause high air velocity, making it difficult to separate the water from the air (since much of the condensed vapor running as water along the bottom of the pipe will be whipped up by, and carried along with, the fast moving airstream).

For the main distribution line from the compressor, excessive pressure drops and energy loss can be avoided by restricting air velocity to a maximum of 1,200 scfm. Higher velocities, can be permitted in the shorter service lines. Oversizing will result in increased initial capital expenditure but is not adverse in any other respect. The larger pipe is in fact advantageous, acting as a reservoir or receiver for the air thus reducing the load on the compressor and providing capacity for increased future demand.

In order to determine the correct pipe size for a particular length of main, the following information is required:

a. Total length of pipe, L (ft.)
b. Volumetric flow rate of air, Q (cfm)
c. Pressure output of compressor, P (psi)
d. Allowable pressure drop in the system, ΔP (psi)

The total system pressure drop should not exceed 4psi and ideally 1.5psi. However, a drop slightly in excess of this can usually be tolerated.

Air-Line Graph

A graph has been designed for pipe sizing and pressure drop calculation. It is based on the Standard Isothermal Compressible flow formula. (Isothermal process taken place under constant temperature.)

The graph is not intended to give absolutely precise information. However, it does provide an acceptable means of determining pipe sizes which are sufficiently accurate for the majority of industrial systems.

A worked example is shown with the values plotted on the graph to illustrate its correct use.

How to use the Nomogram
Example:

What size of pipe will be required for a system 920 ft. long, comprising fittings with a pressure drop, equivalent to a 64 ft. length of pipe. Charts for pressure drops due to fittings can be found on page 9.

The compressed air is required to drive air tools and equipment with a total air consumption of 424 scfm. The minimum pressure required to drive the tools and equipment is 102psi. A compressor rated at 116psi and 530 scfm has been chosen to allow for increased future demand.

The piping should be sized for the anticipated future demand.

Solution: L = 920 + 64 = 984ft.
Q = 530scfm
P = 116psi
Pressure drop is chosen to be = 1.5psi

The length of the pipe run is plotted on scale 'A' and flow rate on 'B'. A straight line is drawn to connect 'A' to 'B' and extended to 'C'.

The compressor output pressure (116psi) is now plotted on scale 'E' and the acceptable pressure drop (1.5psi) is plotted on 'G'. Again, a straight line is drawn to connect 'E' to 'G' which cuts through 'F'.

The intersection points on 'C' and 'F' are now connected with a straight line. The intersection of this line through scale 'D' gives a minimum pipe size. In the example, the line 'C' to 'F' cuts 'D' at just under 90mm. 'D' is scaled in standard pipe sizes and therefore the minimum suitable pipe size will be that shown immediately above the intersection i.e. 90mm (3").

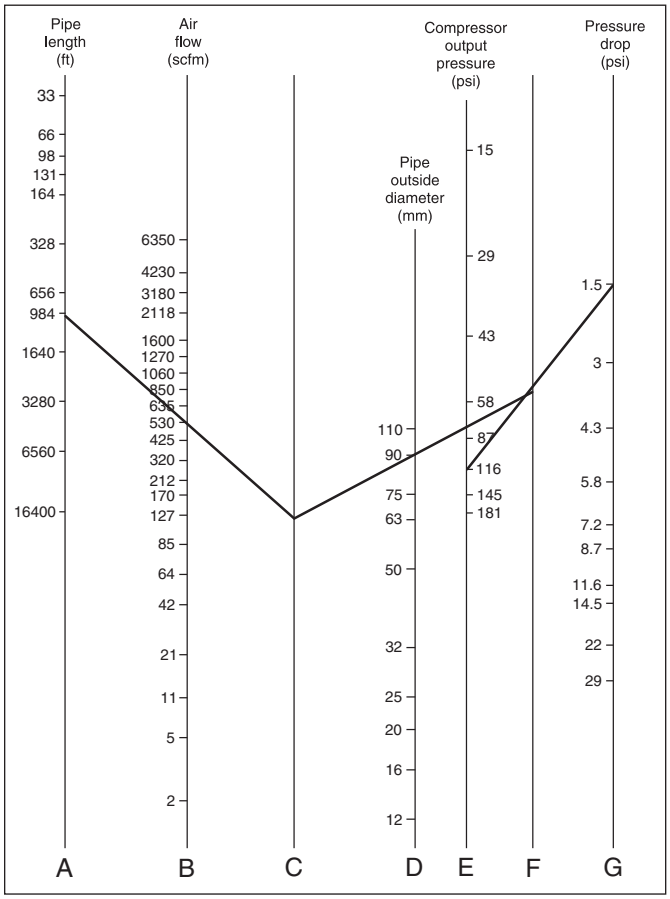

SCFM = standard cubic feet/minute

PIPE SIZING

Pipe Sizing – Branch Lines

Higher velocities can be permitted in branch lines than in main lines.

The flow data chart gives maximum recommended flow in scfm through Air-Line pipe at various applied pressures.

This should be used as a guide only.

The chart is based on a maximum flow velocity of 25 ft/s. E.g. a compressor delivering 115psi and 60 scfm at 73ºF would require a 1" (32mm) pipe (actual maximum capacity would be 61.7 scfm).

Applied Pressure		7psi	15psi	22psi	30psi	58psi	87psi	115psi	145psi	180psi
Pipe Size (in)	Pipe Size (mm)	Maximum recommended air flow (scfm) (standard cubic feet/minute)								
1/2	20	3.73	4.98	6.23	7.48	12.46	17.46	22.44	27.41	33.65
3/4	25	6.10	8.16	10.19	12.23	20.39	28.52	36.68	44.84	55.01
1	32	10.28	13.71	17.14	20.57	34.28	47.99	61.70	75.41	92.55
1-1/2	50	25.07	33.45	41.76	50.11	83.53	116.94	150.36	183.77	225.54
2	63	39.88	53.18	66.47	79.78	132.96	186.14	239.31	292.49	358.98
3	90	81.37	108.49	135.61	162.73	271.24	379.73	488.21	596.70	732.81
4	110	121.88	162.50	203.14	243.76	406.27	568.77	731.29	893.79	1096.92

Pressure Drops in Fittings

Pressure drops occur in pipe, and also across fittings, valves, filters, etc. Therefore, total pressure drop is the summation of all the individual pressure drops for valves, filters and other ancillary equipment.

For pressure drops across filters and other equipment, refer to the particular manufacturer's literature.

Pressure Drop in Fittings – Equivalent Pipe Length in Feet

Fitting Type	Nominal Pipe outside diameter – in						
	1/2 (20mm)	3/4 (25mm)	1 (32mm)	1-1/2 (50mm)	2 (63mm)	3 (90mm)	4 (110mm)
90º elbow	4.13	4.00	3.77	3.51	3.54	3.61	3.64
45º elbow	2.95	2.23	1.51	1.41	1.31	1.87	2.26
90º bend	2.00	1.94	1.61	1.44	1.38	1.67	1.94
Tee-in line flow	1.25	0.85	0.95	0.95	0.76	0.33	0.49
Tee-in line to branch flow	6.40	4.99	4.72	3.87	3.48	3.90	4.33
Reducer	4.66	4.43	4.23	4.10	4.20	4.56	4.78
Composite unions	1.54	1.35	1.18	1.12	0.92	-	-
180O dropper bend	1.28	1.21	1.18	-	-	-	-

NOTE: The table shows the length of pipe with equivalent pressure loss in a given size for a given fitting. For example, a 1.5in 90º elbow has a pressure loss equal to 3.51 ft of 1.5in pipe. All equivalent pipe lengths should be added to the total pipe length when calculating pressure drops in main and branch piping.

NOTES

SECTION FOUR: HANDLING & INSTALLATION

Storage On-Site

The high-impact strength of the Air-Line system provides some protection against the damage which occurs during handling and storage on site.

However, it is recommended that the following precautions are taken:

1. The storage site should be flat, level and free from sharp stones, etc.
2. Pipe should not be stacked to heights exceeding the following:

Pipe Size	Max. Stacking Height
Up to 3" (90mm)	20 x pipe size
4" (110mm) & 6" (180mm)	12 x pipe size
8" (220mm)	7 x pipe size
10"	4 x pipe size
12"	4 x pipe size

3. Smaller pipe may be 'nested' inside larger pipe.
4. Side bracing should be provided to prevent stack collapse.
5. Pipe should not be subjected to excessive temperature variation within the stack.
6. Pipe should be protected from the direct sunlight using a tarp or opaque sheet. If temperatures reach above 100ºF, proper air flow should be allowed under the tarp.

Z-Length Installation Method

As an aid to installation, Z-lengths have been added to the dimensional details of fittings shown in this catalog.
The basic idea is to assist in prefabricating pipe sections and to avoid time-consuming and costly onsite work. By using Z-lengths, as many measurements as possible are taken at one time and pipe sections can be preassembled away from the job site.

To fabricate pipe assemblies from sketches giving center-line dimensions, it is necessary to know the distance from the perpendicular center line of the fitting to the beginning of the pipe and in the case of sockets and similar fittings, the pipe stop length. These are the 'Z-lengths' (or fitting "laying length" dimensions) and are the key to easy fabrication.

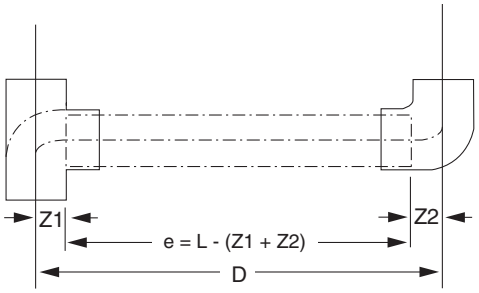

By subtracting the sum of the Z dimensions of the two fittings from the center-to-center measurement, the length of pipe required can be quickly determined. Thus the cutting length required (e) is obtained by subtracting the sum of the two lengths (Z1 + Z2) from the center-line measurement (L).

INSTALLATION TECHNIQUES

Installation Methods

Air-Line is more flexible and has a higher rate of thermal expansion than metal pipe. It is important to follow the guidelines detailed in the following pages to accommodate expansion and contraction and provide adequate support.

Flange Bolt Torque Values

Pipe Diameter	Torque Value
1" (32mm)	13 ft.lb (18 Nm)
1-1/2 - 2" (50 - 63mm)	22 ft.lb (30 Nm)
3" (90mm)	30 ft.lb (40 Nm)
4" (110mm)	33 ft.lb (45 Nm)

Pipe Supports

Support Spacing

The following support spacing is recommended for Air-Line. For vertical pipes, the support spacing shown can be doubled.

Support Spacings for Air-Line Pipe

For each 20ºF rise in temperature, decrease these support spacings by 10%.

Outside Diameter		Support Spacing at 73ºF (23ºC)	
(in)	(mm)	(ft)	(m)
1/2	20	3.94	1.2
3/4	25	4.60	1.4
1	32	4.92	1.5
1-1/2	50	6.23	1.9
2	63	6.89	2.1
3	90	8.20	2.5
4	110	9.19	2.8
6	*	11.00	3.4
8	*	12.50	3.8
10	*	13.50	4.1
12	*	14.50	4.4

***Note:** For sizes above 4", contact IPEX technical support.

Support Design

Air-Line is light in weight (approximately 1/8 the weight of equivalent diameter steel). This means supports can be of light construction.

When subjected to temperature changes, Air-Line will expand more than metals. This expansion should be controlled by laterally constraining the pipe while allowing free axial movement.

Pipe supports should:

1. Be rigid in construction – to adequately support the pipe (fabricated mild steel angle is ideal).
2. Have a wide bearing area – to allow free transmission of pipe movement and to avoid localized stressing.
3. Be free from sharp burrs or edges – to avoid cutting into the pipe wall.
4. Allow free axial pipe movement – to avoid pipe snaking.
5. Provide lateral restraint – to avoid pipe snaking.

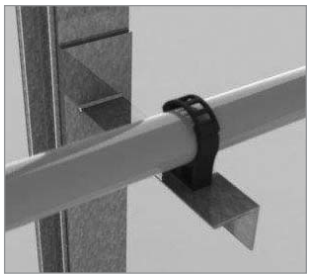

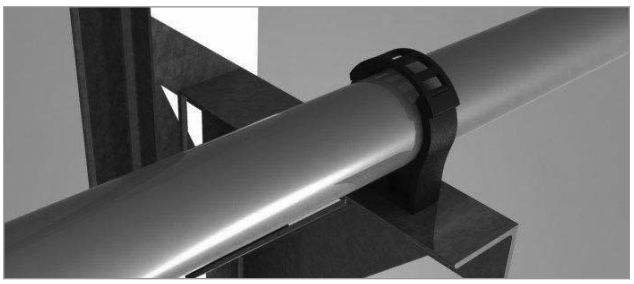

Any pipe clips used in conjunction with Air-Line should also allow free axial pipe movement and afford lateral restraint. IPEX Cobra snap-in pipe clips meet these requirements. A suitable alternative would be fabricated mild steel saddle clips, designed with a clearance between pipe and clip.

Long hanger rod type supports are not designed to provide lateral restraint to piping and are not recommended for use with Air-Line where expansion is expected, since pipe snaking may result.

INSTALLATION TECHNIQUES CON'T

Hanger rods may occasionally be used in conjunction with rigid supports where pipe spans are large and it is not practical to support by any other method. In this case, hanger rods should be kept as short and rigid as possible and must also allow free axial pipe movement.

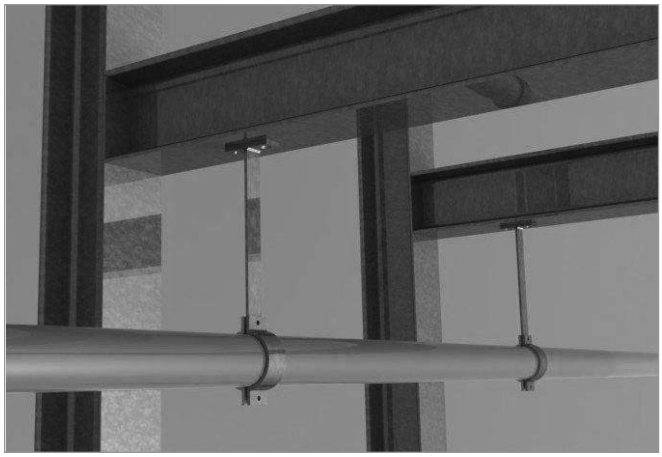

The illustration shows 4" (110mm) pipe being supported with a hanger rod.

Supporting Heavy Equipment

Large valves, filters and other equipment should always be independently supported and anchored to prevent undue loading and stress being transmitted onto the Air-Line system.

For smaller valves and equipment, two pipe clips situated immediately adjacent to either side of the equipment will prevent transmission of excess torque and other loadings to the Air-Line pipe.

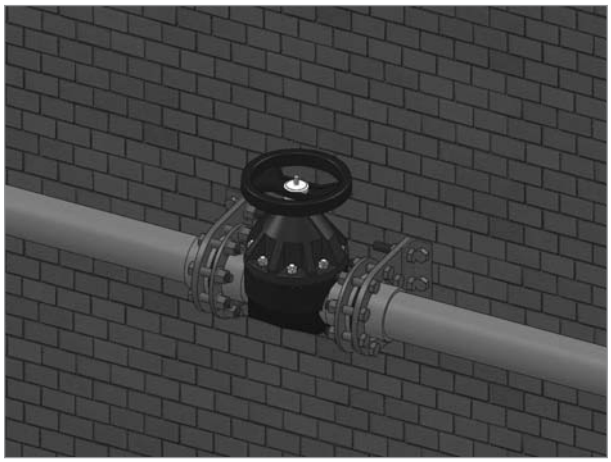

Joining Methods

Solvent Welding

Joining Air-Line pipe and fittings is achieved by solvent welding. A detailed procedure is shown on pages 20 to 23.

Miscellaneous Joining

Threaded Connections – Air-Line to Metal

Air-Line pipe must not be threaded. Connections to metal threads can be made using female threaded adapters or composite unions.

Thread lubricant such as Teflon® tape around the entire length of threads, beginning with the number two thread from the end.

Anaerobic thread sealants, (e.g. Loctite, 542,572, Rectorseal #5) can chemically attack Air-Line and must not be used.

Connections should be tightened by hand, with a final quarter turn with a strap wrench where necessary. Pipe wrenches may induce overtightening with consequential damage to the fitting and therefore should not be used.

Air-Line should not be connected directly to vibrating machinery. Flexible couplings should be incorporated to absorb any movement.

BSPT and NPT Pipe Thread

Two main threads are used in the piping industry with both creating a hydraulic seal when tightened. This seal occurs due to the tapered design of the threads that causes the material to mesh when tightened. BSPT (British Standard Pipe Thread Tapered) originates from Britain and is the standard pipe thread used throughout most of the world. NPT (National Pipe Thread) originated in the US and has become the standard pipe thread for North America.

BSPT thread uses the Whitworth thread form and has the following characteristics:

- British standard 21 symmetrical V-thread in which the angle between the flanks is 55° (measured in an axial plane)
- One-sixth of this sharp V is truncated at the top and the bottom
- The threads are rounded equally at crests and roots by circular arcs that blend tangentially with the flanks

Connections to Instrumentation

BSPT

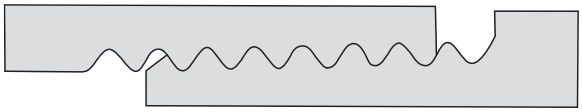

Teflon® is a trademark of E.I. DuPont™ company

INSTALLATION TECHNIQUES CON'T

NPT also known as ANSI/ASME B1.20.1 Pipe Threads has the following characteristics:

- ANSI/ASME standard B1.20.1 covers threads of 60° form with flat crests and roots
- Applicable sizes from 1/16-inch to 24-inch Nominal Pipe Size
- The taper angle for all NPT threads is 3/4 inches per foot.

NPT

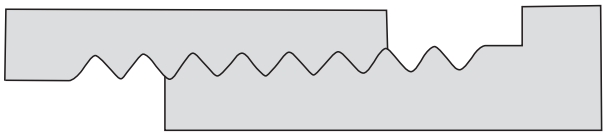

The chart below shows the difference in threads per inch between NPT and BSPT. It can be seen that some sizes will have the same amount of thread per inch for both types of thread. This means that the parts will thread together. However, the difference in thread angle of 5° will cause interference in the joint. This interference may cause the joint to buckle before proper engagement occurs.

BSPT Tapered External Thread (inches)

Nominal Size	OD	Threads per Inch
1/2	0.840	14
3/4	1.060	14
1	1.330	11
1-1/2	1.900	11
2	2.370	11
3	3.500	11
4	4.500	11

NPT Standard External Thread (inches)

Nominal Size	OD	Threads per Inch
1/2	0.840	14
3/4	1.050	14
1	1.315	11-1/2
1-1/2	1.900	11-1/2
2	2.375	11-1/2
3	3.500	8
4	4.500	8

Threading a male NPT into a female BSPT is possible for certain sizes because the threads per inch are the same or very close. These similarities will allow the fitting to thread on partially before buckling or jamming together. This buckling occurs before the joint is fully engaged and is caused by the difference in thread angle between the two types of threads (see below). Though the joint will often work there is an increased chance of a spiral leak occurring.

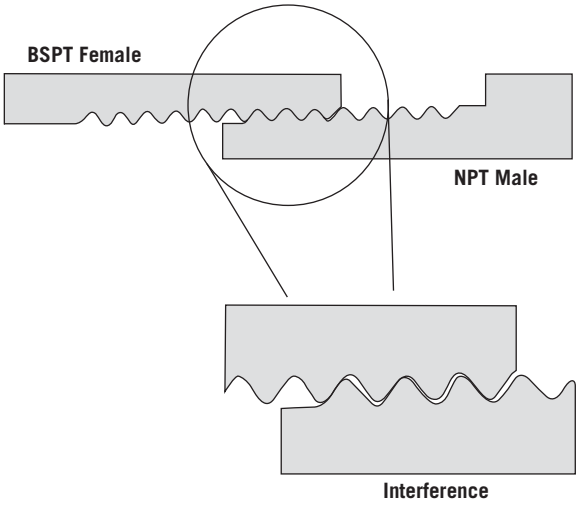

Note: When threading thermoplastic materials it is always recommended to use Teflon tape as a lubricant to achieve a leak free seal.

Pressure gauges, temperature gauges and flow measurement probes can be connected to the Air-Line system with female threaded adapters or composite unions solvent welded into plain Air-Line tees. Alternatively, threaded saddle clamps can be used.

INSTALLATION TECHNIQUES CON'T

Quick-Release Coupling Connections

High Level

Quick release couplings or hoses may be connected to the Air-Line system by using a female threaded adapter or composite union, solvent welded to a dropper bend. This method should be used in areas not normally accessible from the floor level and not subject to frequent disconnection.

The connection should be reinforced using two IPEX pipe clips as illustrated below.

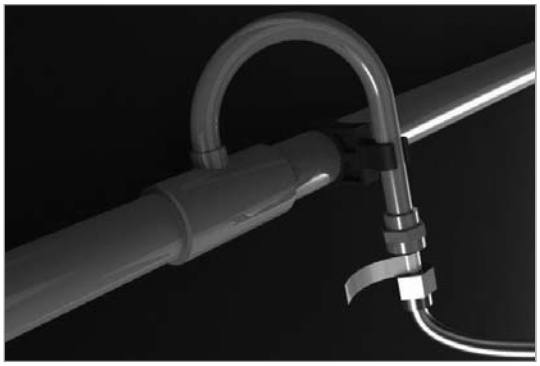

Termination of Drop Legs

It is important that the lower end of all pipe droppers and any take-off points, particularly those employing flexible hoses, are rigidly attached to walls, pillars, etc. Two methods are available for such terminations:

1. If drains are required, and the dropper is attached to a tee, then the branch line will be held in place with a wall bracket.
2. When drains are not required, Air-Line wall brackets must be used at the lower end of the vertical droppers to prevent strain from flexible hoses.

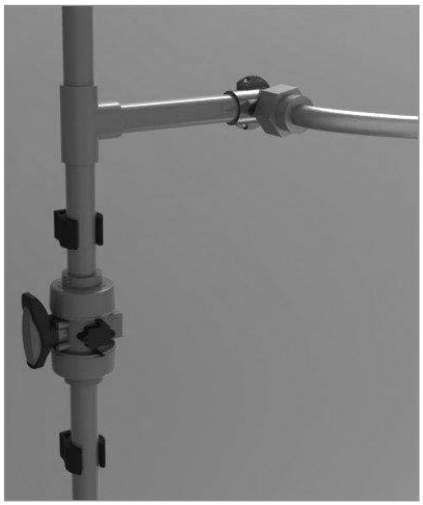

Mechanical Joints

Systems which require frequent disassembly can use Air-Line unions or stub flanges. (These can also be used at fixed terminal connections such as air receivers or dryers.)

INSTALLATION TECHNIQUES CON'T

Thermal Expansion

Expansion Rates

While thermoplastics expand more than metals, they have a much lower thermal conductivity. This means the entire wall of a plastic pipe does not reach the same temperature as the contents, unless the pipe is wholly immersed at the same temperature inside and out.

The expansion and contraction of a plastic pipe is a function of the change in average temperature of the pipe wall.

This means the expansion in a thermoplastic pipe is frequently less than expected because the average pipe wall temperature is lower than the contents.

Approximate expansion rates for Air-Line pipe are shown on the graph.

More precise information can be obtained from the formula given on page 18.

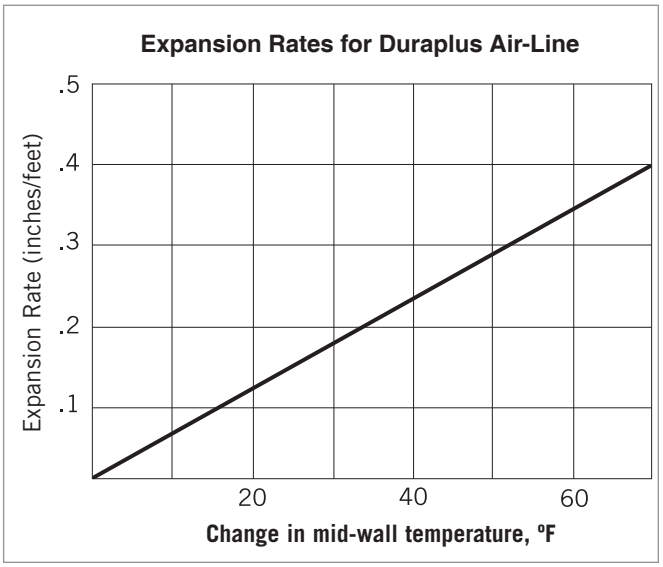

Controlling Pipe Expansion (Fig. 1)

Because of the small differences between ambient and service air temperatures plus the low thermal conductivity of the Air-Line material, most pipe expansion can be accommodated by using the inherent flexibility of the product and proper pipe supports and guides.

The basic principle of design is to allow pipe runs to expand along their length from a fixed point and then to guide this expansion into a change of pipe direction which will flex as the pipe expands and contracts.

The following examples explain this principle in further detail.

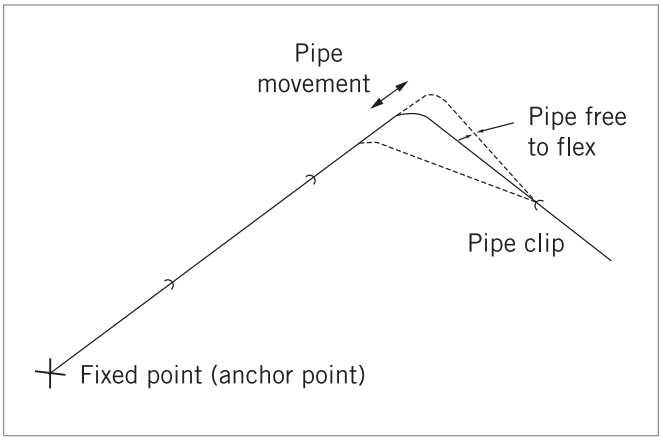

Figure 1

Pipe Constrained at Both Ends (Fig. 2)

In the diagram, the pipe run is fixed at one end to the flanged outlet of the air receiver, (Point A) and constrained at the other end by virtue of its close proximity to the wall (Point B).

Problem (Fig. 2)

As the temperature increases, the pipe will try to expand outward but will have nowhere to go because of its fixed ends. The expansion will be directed inward from both the wall and the air receiver resulting in the pipe twisting between supports, as indicated.

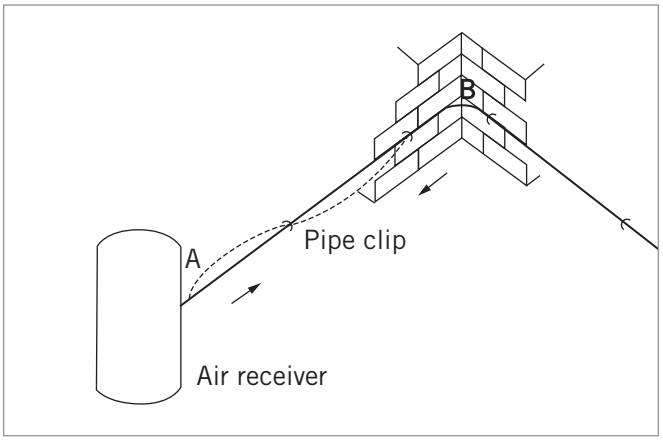

Figure 2

INSTALLATION TECHNIQUES CON'T

Solution (Fig. 3)

By using fabricated angle iron brackets and IPEX Cobra pipe clips along pipe length B, C, & D, the pipe can be installed away from the wall with sufficient room for it to expand and contract.

Now the pipe will expand away from its fixed point, (the air receiver – (A)), and the movement will be guided into the change of direction, i.e. pipe leg length B, C, D.

Note: The support at C remains, but the clip is removed to give it sufficient leg length for flexibility.

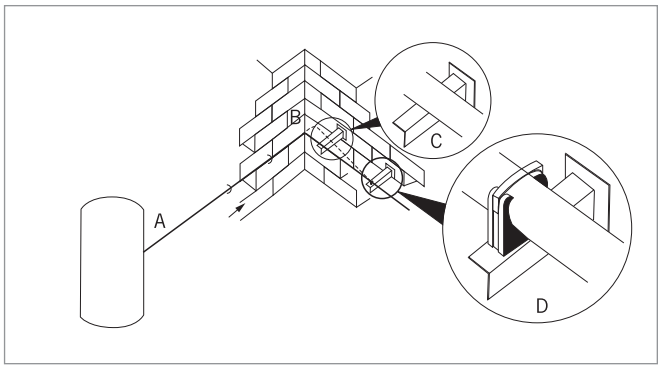

Figure 3

Pipe Anchors (Fig. 4)

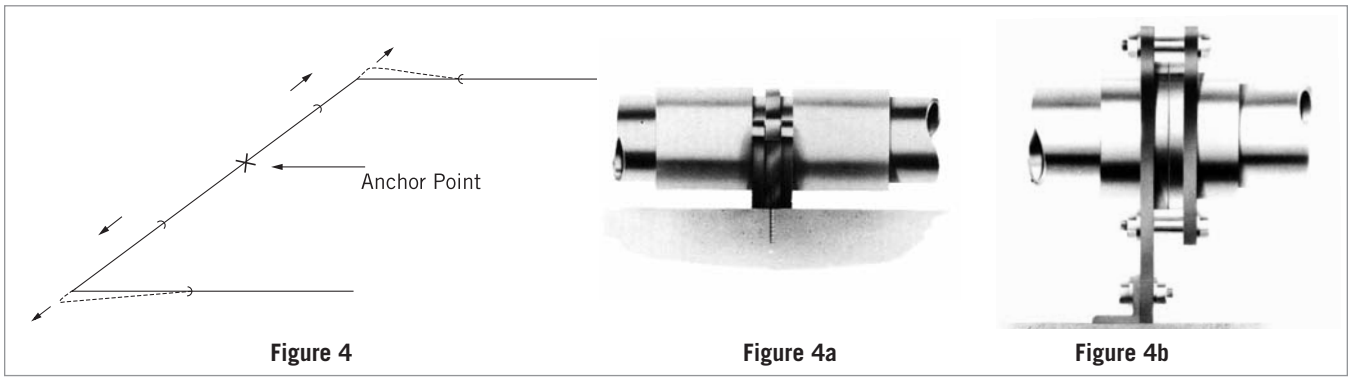

Figure 4 **Figure 4a** **Figure 4b**

In the previous example, the air receiver acted as an anchor point to the pipe system and this served to direct the thermal expansion of the pipe – i.e. the pipe was forced to move in one direction from Point A.

Alternatively, an anchor can be placed at an appropriate point in the run to control the direction of expansion.

Typical methods of producing anchors are shown in Figures 4a and 4b. The pipe should not be clamped, but simply restrained from moving.

Equipment such as valves, filters and lubricators need independent support as previously indicated (page 13). These supports will automatically serve as anchors to the system.

All the anchors previously described, provide complete axial and lateral pipe restraint. During installation, pipe clips may be strategically positioned to serve as partial anchors. For instance, in Figure 5, a pipe clip has been positioned close to Point B, forcing the expansion along pipe length BC and into leg length CD, which is able to flex.

NOTE: A saddle clip is used for this application.

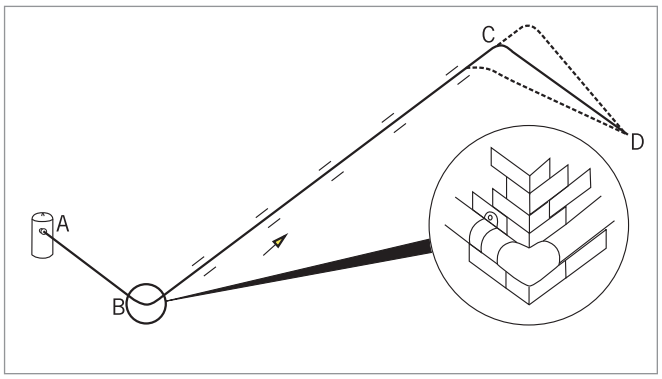

Figure 5

INSTALLATION TECHNIQUES CON'T

Pipe Flexibility

It is essential that the pipe leg into which expansion is being directed is flexible enough to accommodate the expected movement. In certain cases, pipe lengths may need to be increased or expansion loops may be required.

The methods shown in Figures 6-9 use flexibility introduced to accommodate expansion which occurs in the direction of the arrows.

The pipe shown in Figure 9 has the required flexibility but expansion is constrained by clips fitted too close to the bends. Movement can be controlled by anchoring and flexing the bends allowed for by moving the clips.

The degree of flexibility required in pipe legs depends upon the amount of pipe expansion to be accommodated. Typical calculations are detailed below.

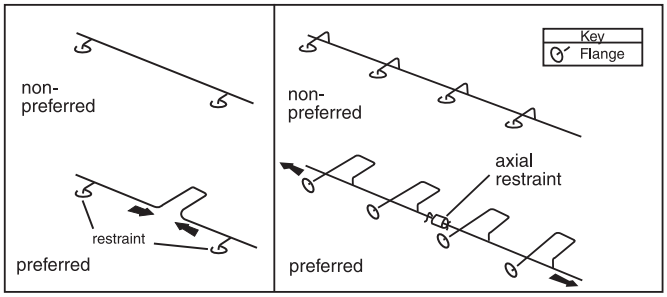

Figure 6 Figure 7

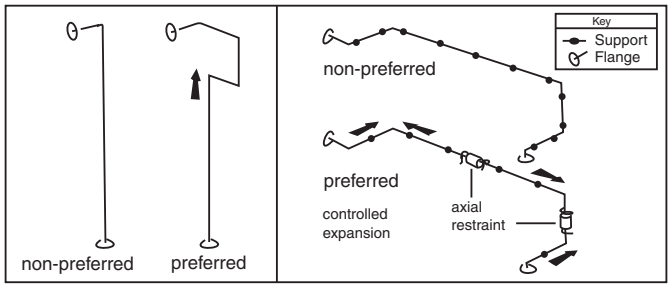

Figure 8 Figure 9

Flexibility – Sizing of Leg Lengths and Loops

The actual expansion, or contraction, of Air-Line pipe is dependent on the change in temperature of the mid-wall of the pipe. The mid-wall temperature is dependent on the internal and external temperatures with the temperature of the compressed air having the greater influence - unless the piping is subject to radiated heat.

The following simple equations may be used to calculate expansion or contraction:

ΔT_L = Maximum temperature change of compressed air (ºF)

ΔT_A = Maximum temperature change of external air (ºF)

ΔT = Change in average temperature of pipe wall (ºF)

ΔL = Change in length of pipe (inches)

α = Coefficient of linear expansion of Duraplus Air-Line (in/inºF)

For Air-Line $\alpha = 5.6 \times 10^{-5}$ (in/inºF).

L = Original length of pipe (feet)

To calculate pipe wall temperature change, use the equation

$$\Delta T = 0.65\ \Delta T_L + 0.10\ \Delta T_A$$

Using value of ΔT, calculate expansion.

$$\Delta L = \Delta T \times L \times \alpha$$

Air-Line - Expansion Loops

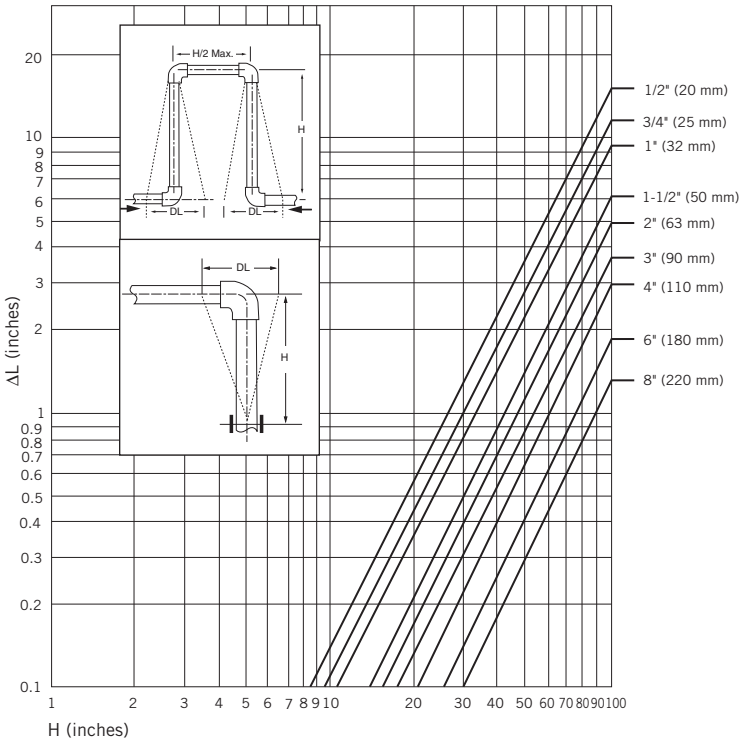

INSTALLATION TECHNIQUES CON'T

Example 1: Leg Lengths

The 3" (90mm) Air-Line pipe shown in Figure 10 is conveying compressed air at a temperature varying between 100ºF and 120ºF. The ambient temperature varies from 60ºF to 90ºF. Determine the free leg length required at the change of direction to accommodate thermal expansion.

Solution

$\Delta T = .65\ (\Delta T_L) + .1\ (\Delta T_A)$
$= .65\ (120 - 100) + .1\ (90 - 60)$
$= .65\ (20) + .1\ (30)$
$= 13 + 3$
$\therefore\ \Delta T = 16ºF$

$\Delta L = L\ \alpha\ \Delta T$
$= (100 \times 12)\ (5.6 \times 10^{-5})\ (16)$
$\therefore\ \Delta L = 1.08$ inches

Calculate leg length A-B

Using the value of 1.08", draw a horizontal line on the graph (page 18) from the vertical scale to meet the 3" (90mm) pipe gradient line. Drop a perpendicular from the intersection point to the horizontal scale. The figure obtained is the leg length required, i.e. length A to B.

In this case therefore, the leg length will be 56", i.e. the first support guide should be positioned at B, 56" (1.42m) from the elbow at A.

Note: A support without a guide may be required at point A.

Example 2 Expansion Loops

Determine the loop size required in a 2" (63mm) Air-Line pipe which is constrained at both ends as shown in Figure 11. the compressed air temperature varies between 100ºF and 120ºF. The ambient temperature varies from 40ºF to 100ºF.

Solution:

The solution follows exactly the same principles used in the previous example.

$\Delta T = .65\ (\Delta T_L) + .1\ (\Delta T_A)$
$= .65\ (120 - 100) + .1\ (100 - 40)$
$= .65\ (20) + .1\ (60)$
$= 13 + 6$
$\therefore\ \Delta T = 19ºF$

$\Delta L = L\ \alpha\ \Delta T$
$= (100 \times 12)\ (5.6 \times 10^{-5})\ (19)$
$\therefore\ \Delta L = 1.28$ inches

Calculate Loop Size

In this case, the expansion is equally split and directed inward from points A and B. Therefore, using a value of $\Delta L/2$ (i.e. 1.28/2 = 0.64"), draw a horizontal line on the graph from the vertical scale to meet the 2" (63mm) pipe gradient line. Drop a perpendicular from the intersection point to the horizontal scale. The figure obtained is the leg length of loop offset required, i.e. 36" (.91m)

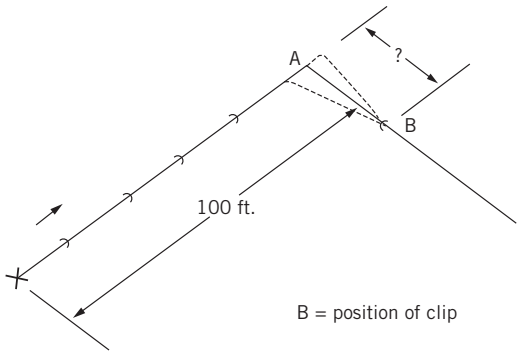

Figure 10

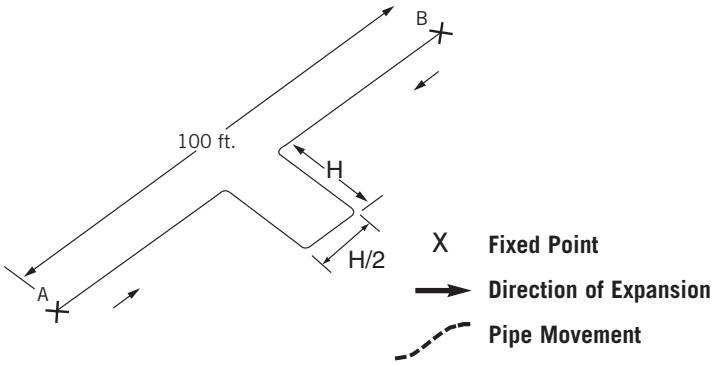

Figure 11

JOINING METHODS

Solvent Welding

Joining of Air-Line pipe and fittings is achieved by solvent welding. Correctly made, the resulting joints are stronger than either pipe or fitting.

Air-Line solvent cement is designed and formulated to match the temperature and design performance of the Air-Line system. When applied, it will chemically soften the prepared surfaces of the pipe and fitting, allowing fusion between the mating surfaces when brought together.

The extent of softening by the solvent cement is dependent upon the removal of all traces of foreign matter from the mating surfaces, i.e. oil, dirt, grease, etc. The cleaner the mating surfaces, the stronger the resulting joint will be.

Joint Curing Times

The strength of the solvent cemented joint increases with curing time. The initial cure is very rapid but full joint strength is not reached for a number of hours. The actual curing time depends upon a number of factors, including the amount of solvent applied, the fit of the component and the ambient temperature. A guide to the amount of solvent to be used is shown below.

At a temperature of 73ºF (23º), an approximate curing time is to allow one hour per 15psi (103kPa) of applied pressure. However, a minimum of six hours must elapse before any system is pressurized.

Joints made in environments with higher ambient temperatures will require longer curing times. For example, at 90ºF (32ºC), a full 24 hours should elapse before full working pressure is applied; at 100ºF (38ºC), 48 hours will be required prior to pressurization.

Precautions

- Always use clean, lint free cloth or industrial wipes.
- Always use genuine Durapipe Air-Line Xtra solvent cement and eco cleaner.
- Always replace lids on containers after use.
- Always keep joint surfaces dry.
- Never use cement or cleaners in confined spaces without adequate ventilation.
- Never joint near naked flames.
- Do not smoke in the working area.
- Never dilute cement with eco cleaner.
- Solvent cement and cleaners are hazardous, flammable materials and should be stored and handled with care and kept out of the reach of children.
- Material Safety Data Sheets (MSDS's) for these products are available.

Number of Joints per Quart

Under normal conditions, the following approximate number of joints can be made per quart of solvent cement. Actual usage will depend upon ambient conditions and the fit between the pipe and fitting.

Size (in)	Number of Approxmiate Joints
1/2 – 1	290
1-1/2 – 2	144
3	48
4	32

Joining Times

The following indicates expected times to produce solvent joints across the size range. These times may be extended slightly under adverse installation conditions.

Size (in)	Joining Time
1/2 – 1	5 mins/joint
1-1/2 – 2	7 mins/joint
3 – 4	10 mins/joint

Solvent Cement Type

The integrity of the Air-Line system will be affected if the correct Duraplus Airline solvent cement is not used. IPEX disclaims responsibility for any Air-Line system constructed with any other cements or compounds or not fabricated in accordance to the instructions contained herein.

JOINING METHODS CON'T

Procedure

Joining is simple and quick, but the following procedures must be adhered to if maximum joint efficiency is to be achieved.

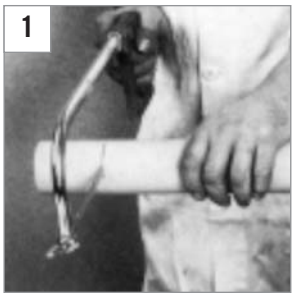

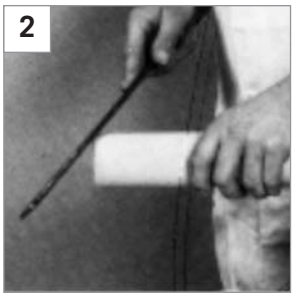

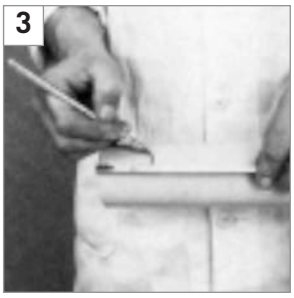

1. Cut pipe clean and square. A hacksaw is convenient for smaller pipes but a fine-tooth carpenter's saw has proved to be more suitable on the larger sizes.

   Proprietary rotary cutting tools specially designed for plastics can also be used, provided the cutting edges are maintained in a sharp condition.

2. Cut a lead chamfer on the pipe with a file or chamfering tool.

   This assists entry of pipe into fitting during joining and also prevents the solvent cement layer from being sheared by the surface of the fitting when pushing the pipe fully home.

   The size of chamfer will depend upon the pipe's diameter but on average it will be 1/8" x 45º.

3. Remove internal and external burrs and clean out fittings.

   Mark the pipe a convenient distance from the end to be joined – say 1" (25mm) plus socket depth.

   This enables checking the penetration of the pipe into the fitting after joining – the mark should be visible 1" (25mm) from the socket after joining. (This step will not be necessary as experience is gained since the fitter will be able to feel the pipe butt against the pipe stop.)

4. Lightly sand the end of the pipe over a length equal to the depth of the fitting socket, using only clean medium glass paper or emery cloth.

   No attempt should be made to increase the clearance between pipes and fittings by heavy abrasion.

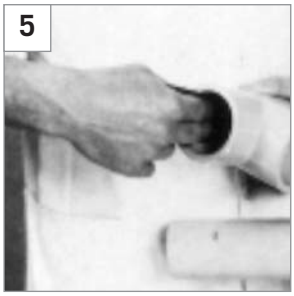

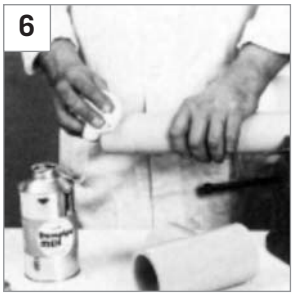

5. Lightly sand the socket of the fitting.

6. Thoroughly clean the sanded surfaces of pipe and fittings using a clean rag moistened with Duraplus MEK cleaner.

7. Open the can of Air-Line solvent cement and stir thoroughly. This ensures even distribution of the Air-Line resin within the solvent base and will aid the joining process.

JOINING METHODS CON'T

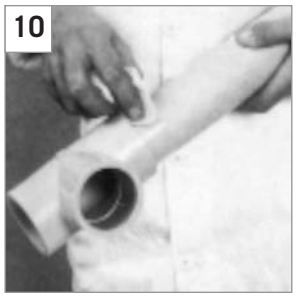

8. Using a clean brush or a roller, apply the solvent cement to the pipe and fitting.

   One coat should be sufficient for all pipe sizes.

   The cement should be applied quickly to both the pipe and fitting.

   Care should be taken to avoid any excess deposit of solvent cement inside the fitting which could weaken the wall, particularly in the smaller sizes.

9. Immediately after applying the cement, push pipe fully home into the fitting.

   Continue to exert the pressure necessary to hold the pipe into the fitting for times varying from five seconds on 1/2" (20mm) pipe to 20 seconds on 4" (110mm) sizes. Otherwise, the slight taper of the Air-Line fittings may push the pipe out of the socket with loss of joint shear strength.

   Check for full penetration of pipe to socket by measuring against the mark previously made on the pipe.

10. Wipe off excess solvent cement to avoid weakening the pipe wall due to continued solvent attack.

11. Replace lid on the solvent cement can to minimize solvent evaporation. This is particularly important in hot weather.

12. Clean brush with MEK cleaner and replace screw cap.

Seeting Times

	Up to 63mm		75mm – 110mm	
Surrounding Temperature	Up to 87 psi	Up to 185 psi	Up to 87 psi	Up to 185 psi
50 F – 120 F	2 hours	4 hours	4 hours	12 hours
40 F – 50 F	4 hours	6 hours	6 hours	24 hours

JOINING METHODS CON'T

Air-line Fittings Range

The use of reducer couplings, female threaded adapters and reducer bushings

All fittings have socket hubs, dimensionally controlled for solvent welding. In addition, the illustrated fittings are provided with inside and outside controlled diameters and can therefore be used as spigot or socket components as shown.

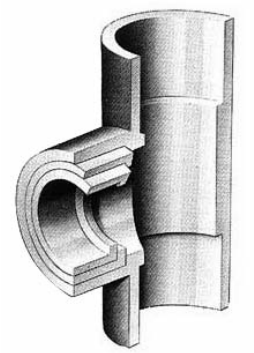

Reducer Bushing

Reducer Coupling

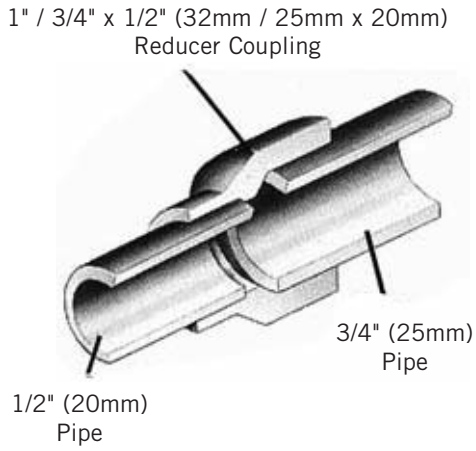

PIPE TO PIPE

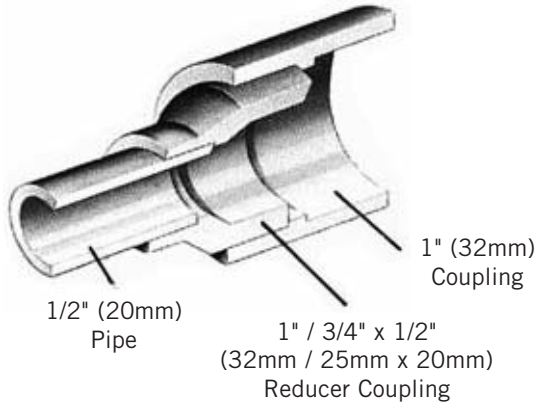

PIPE TO FITTING

Female Adapter

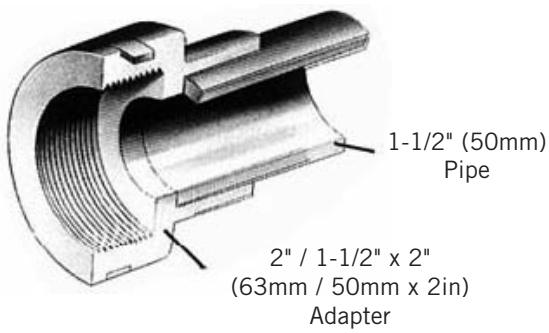

FITTING TO PIPE

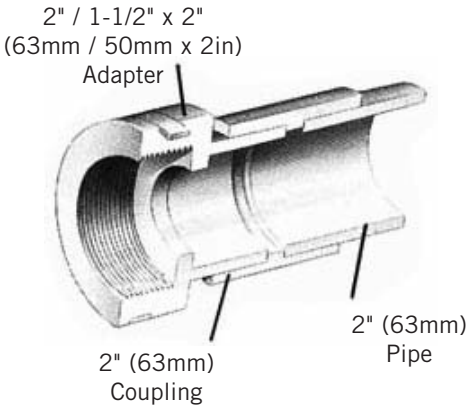

FITTING TO FITTING

Airline is metric sized. Equivalent inch sizes are: 20 (1/2"), 25 (3/4"), 32 (1"), 50 (1-1/2"), 63 (2"), 90 (3"), 110 (4")

HANDLING AND INSTALLATION

Buried Pipe

Air-Line is equally suited to above ground and buried use. Recommendations covering essential requirements for large runs below ground may be summarized as follows:

In general, trenches should not be less than 3' (.91m) deep. However, site conditions may permit pipe being laid nearer the surface – IPEX's Customer Service Department should be contacted for detailed advice.

Trenches should be straight-sided and as narrow as possible to allow proper consolidation of packing materials.

Trench bottoms should be as level as possible.

Large pieces of rock, debris and sharp objects should be removed.

Unless the excavation is in ground of natural materials of fine grains, a bed of finely graded pea gravel should be laid (3/8" (10mm), or similar) approximately 3" (76mm) deep on the floor of trench. (Sand may be used but a high water table may wash sand away and leave the pipe unsupported.)

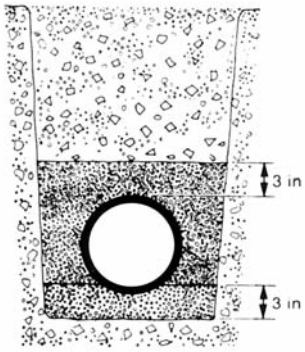

If piping is joined above ground, it should remain undisturbed for 2 hours before being 'snaked' into the trench. Alternatively, the pipe may be joined in the trench.

Particular care should be taken to ensure piping and joining materials are thoroughly dry and that the joining procedure shown in this manual was strictly followed.

Care should be taken to ensure that sharp objects, stones, etc., are prevented from falling into the trench. Backfilling should be carried out between joints using pea gravel, or similar material, to a depth of 3" (76mm) above the pipe and extended sideways to both trench walls. Joints should be left exposed for pressure testing.

After pressure testing, joints should be covered with pea gravel and backfilling completed.

Because of the condensation which can build up in any compressed air system, drain pits should be constructed at the lowest points of the line so a drain facility can be incorporated.

Air Testing Procedure

1. Fully inspect the installed piping for evidence of mechanical abuse and dry or suspect joints.
2. Split the system into convenient test sections not exceeding 1,000ft (305m).
3. Slowly pressurize each section to 15psi (103kPa) and allow the system to equalize for 30 minutes.
4. Check joints for leaks with a Duraplus-approved foaming agent. Never use leak detection sprays such as Snoop. If leaks are detected or the system loses pressure, stop the test immediately and relieve pressure.
5. Any threaded joints found to be leaking should be re-made using Teflon® (PTFE) tape wrapped around the thread. Any defective solvent weld joint should be cut out and replaced. Further tests should be suspended until the joint has fully cured for 24 hours.
6. After successfully pressurizing the system to 15psi (103kPa) for 30 minutes, gradually increase the pressure to 50psi (345kPa) and apply for 30 minutes. If any loss in pressure occurs, immediately suspend the test, release the pressure and correct the leaks as indicated above. Re-pressurize to a maximum of 15psi ((103kPa) and test each joint with a soap solution. Continue the test procedure as indicated above.
7. After successfully pressurizing to 50psi (103kPa) for 30 minutes gradually increase the pressure to full working pressure and apply for 1 hour.

If the system loses pressure, immediately suspend the test and release the pressure. Re-pressurize to a maximum 15psi (103kPa) and test each joint with soap solution. Continue the testing procedure as indicated above.

Installed Exposure to Sunlight

All Air-Line piping installed outside and subject to exposure to sunlight must be painted for protection to retain the full toughness and ductility of the material. This can be achieved as follows:

1. Lightly abrade the pipe and fittings, using medium grade glass paper, to provide a 'key' for the paint to adhere to.
2. Clean the system down with soap and water to remove any residual grease or oil. Do not use solvents or detergents.
3. Select a white, water-based latex paint, preferably one containing titanium dioxide. Do not use cellulose or solvent-based paints.
4. Apply an undercoat followed by a final gloss coat.

Teflon® trademark of the E.I. Dupont Company

SECTION: FIVE: DIMENSIONAL DATA

Duraplus Airline metric pipe and fittings are listed to the equivalent nominal Imperial size.

Pipe 185psi (1275kPa)

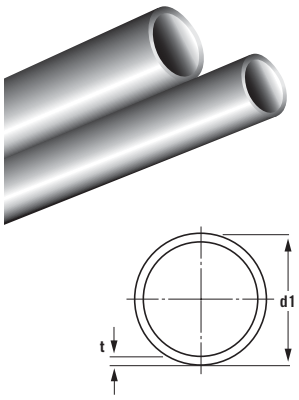

Pipe Size		Significant Number	Product Code	d1		t		Min. Sch 40 Wall Thickness
(in)	(mm)			(mm)	(in)	(mm)	(in)	
1/2	20	553306	446000	20.0	0.79	2.1	0.083	0.109
3/4	25	553307	446001	25.0	0.99	2.4	0.0945	0.113
1	32	553308	446002	32.0	1.26	2.9	0.114	0.133
1-1/2	50	553310	446003	50.0	1.97	4.5	0.177	0.145
2	63	553311	446004	63.0	2.48	5.7	0.224	0.154
3	90	553313	446005	90.0	3.55	8.0	0.315	0.216
4	110	553314	446006	110.0	4.34	9.9	0.39	0.237

Pipe Clip

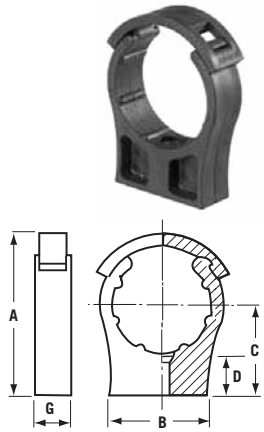

Size (in)	Significant Number	Product Code	Critical Dimensions (in)					
			B	C	G	A	D	Wt. (oz)
*1/2	434306	437341	1.38	1.18	0.63	–	0.55	0.35
*3/4	434407	437342	1.38	1.38	0.67	–	0.63	0.39
*1	434308	437343	1.58	1.58	0.67	–	0.67	0.46
1-1/2	434310	437345	1.97	1.97	0.83	3.35	0.87	1.20
2	434311	437346	2.36	2.36	0.83	4.02	0.75	1.59
3	434313	437348	3.15	3.15	1.22	5.83	1.54	3.88
4	434314	437349	3.54	3.78	1.38	6.73	1.42	5.30

* Without Retaining Clip

Coupling Socket

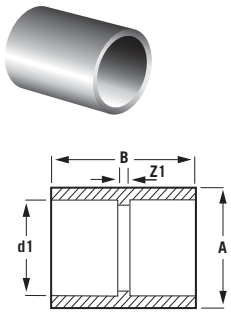

Size d1 (in)	Significant Number	Product Code	Critical Dimensions			
			Z1	A	B	Wt. (oz)
1/2	100306	437026	0.11	0.98	1.42	0.25
3/4	100307	437027	0.11	1.22	1.62	0.42
1	100308	437028	0.11	1.58	1.89	0.88
1-1/2	100310	437029	0.11	2.44	2.68	2.72
2	100311	437030	0.11	3.07	3.19	5.44
3	100313	437032	0.16	4.38	4.33	13.41
4	100314	437033	0.24	5.35	5.19	24.36

DIMENSIONAL DATA

90º Elbow – Socket

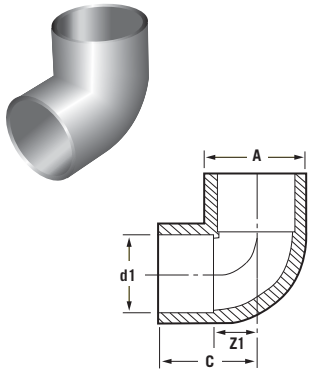

Size d1 (in)	Significant Number	Product Code	Critical Dimensions (in)			
			Z1	A	C	Wt. (oz)
1/2	115306	437111	0.47	0.98	1.11	0.35
3/4	115307	437112	0.55	1.22	1.31	0.60
1	115308	437113	0.71	1.58	1.58	1.24
1-1/2	115310	437114	1.07	2.44	2.36	4.38
2	115311	437115	1.34	3.07	2.87	8.12
3	115313	437117	1.93	4.38	4.01	24.36
4	115314	437118	2.37	5.35	4.89	43.07

45º Elbow – Socket

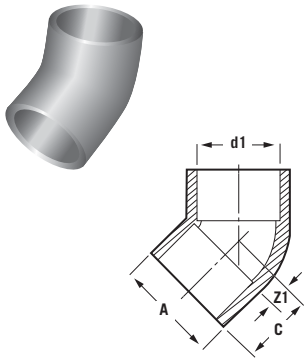

Size d1 (in)	Significant Number	Product Code	Critical Dimensions (in)			
			Z1	A	C	Wt. (oz)
1/2	115306	437128	0.24	0.98	0.87	0.25
3/4	115307	437129	0.28	1.22	1.02	0.49
1	115308	437130	0.32	1.57	1.22	0.95
1-1/2	115310	437131	0.51	2.44	1.77	3.53
2	115311	437132	0.59	3.07	2.13	6.35
3	115313	437134	0.91	4.41	3.00	19.42
4	115314	437135	1.02	5.35	3.54	33.54

90º Bend – Socket

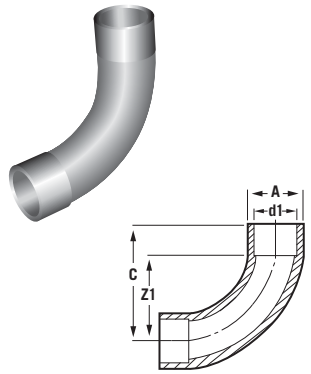

Size d1 (in)	Significant Number	Product Code	Critical Dimensions (in)			
			Z1	A	C	Wt. (oz)
3/4	118307	437120	1.57	1.30	2.72	1.34
1	118308	437121	2.51	1.61	3.43	2.65
1-1/2	118310	437122	3.93	2.43	5.20	8.65
2	118310	437123	4.96	3.07	6.50	16.59
3	118313	437125	7.08	4.38	9.21	47.66
4	118314	437126	8.66	5.51	11.18	90.72

DIMENSIONAL DATA

Tee – Socket

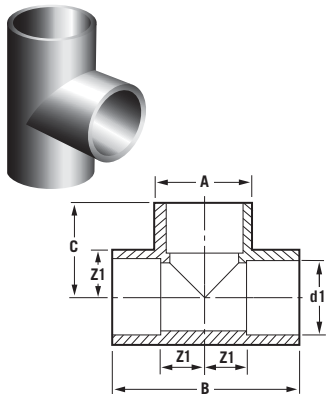

Size d1 (in)	Significant Number	Product Code	Critical Dimensions (in)				
			Z1	A	B	C	Wt. (oz)
1/2	122306	437151	0.47	0.98	2.20	1.10	0.42
3/4	122307	437152	0.55	1.22	2.64	1.31	0.85
1	122308	437153	0.70	1.56	3.19	1.61	1.69
1-1/2	122310	437154	1.07	2.43	4.69	2.36	5.65
2	122311	437155	1.34	3.07	5.75	2.87	10.59
3	122313	437157	1.93	4.38	8.03	4.02	31.77
4	122314	437158	2.37	5.35	9.77	4.87	58.25

Tee – Reducer – Socket

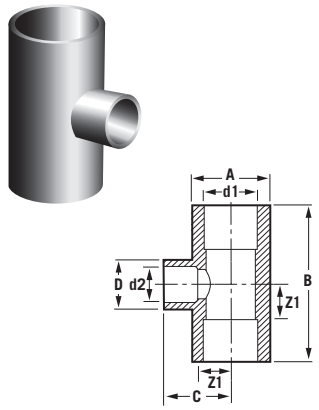

Size (in)		Significant Number	Product Code	Critical Dimensions (in)					
d1	d2			Z1	A	B	C	D	Wt. (oz)
3/4	1/2	124415	437161	0.55	1.22	2.64	1.22	0.98	0.80
1	1/2	124418	437163	0.70	1.56	3.18	1.38	0.98	1.40
1	3/4	124419	437164	0.70	1.56	3.18	1.45	1.22	1.45
1-1/2	1/2	124424	437166	1.07	2.43	4.68	1.72	1.14	4.94
1-1/2	3/4	124425	437167	1.07	2.43	4.68	1.81	1.22	4.94
1-1/2	1	124426	437168	1.07	2.43	4.68	1.96	1.56	4.94
2	3/4	124429	437169	1.34	3.07	5.75	2.08	1.22	9.20
2	1	124430	437170	1.34	3.07	5.75	2.24	1.57	9.20
2	1-1/2	124432	437171	1.34	3.07	5.75	2.64	2.43	9.53

Dropper Bend – Spigot

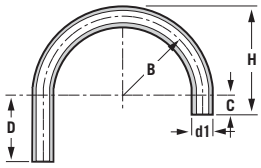

Size d1 (in)	Significant Number	Product Code	Critical Dimensions (in)					
			B	C	D	H	Dev Length	Wt. (oz)
1/2	437259	312306	2.75	0.78	3.54	3.14	13.00	0.99
3/4	437260	312307	2.95	0.90	3.54	3.36	13.70	1.27
1	437261	312308	3.77	1.02	6.30	5.66	19.20	4.80

DIMENSIONAL DATA

Reducer Bushing – Socket

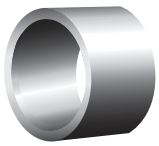

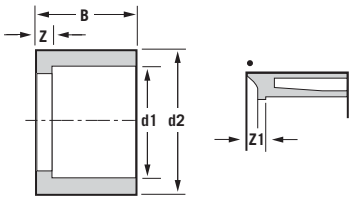

Size (in)		Significant Number	Product Code	Critical Dimensions (in)		
d1	d2			Z1	B	Wt. (oz)
1/2	3/4	109415	437051	0.12	0.75	0.14
3/4	1	109419	437053	0.20	0.91	0.21
*1/2	1-1/2	109424	437055	0.62	1.27	1.13
*3/4	1-1/2	109425	437056	0.51	1.27	1.02
1	1-1/2	109426	437057	0.39	1.27	1.67
*3/4	2	109429	437059	0.74	1.50	2.12
*1	2	109430	437060	0.63	1.52	1.27
1-1/2	2	109432	437061	0.28	1.52	1.66
*1-1/2	3	109432	437062	0.28	2.10	7.05
*2	3	109433	437063	0.59	2.13	7.91
*2	4	109449	437065	0.97	2.50	8.90
3	4	109451	437066	0.39	2.50	7.06

* Denotes bushing configuration shown in inset. For an example on the use of reducer bushings see page 23.

Reducer Coupling – Socket/Spigot x Socket

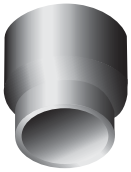

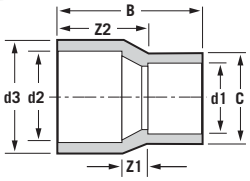

Size (in)			Significant Number	Product Code	Critical Dimensions (in)				
d1	d2	d3			Z1	Z2	B	C	Wt. (oz)
1/2	3/4	1	114415	437103	0.24	1.00	1.65	0.98	0.42
1	1-1/4	1-1/2	114423	437105	0.39	1.47	2.36	1.56	1.39
2	2-1/4	3	114438	437108	0.50	2.29	3.81	3.07	6.71

NOTE: For an example on the use of reducer couplings see page 23.

Cap – Socket

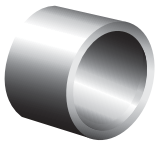

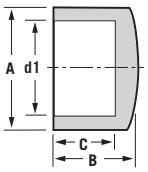

Size d1 (in)	Significant Number	Product Code	Critical Dimensions (in)			
			A	B	C	Wt. (oz)
1/2	149306	437192	0.99	0.83	0.65	0.18
3/4	149307	437193	1.26	0.95	0.77	0.28
1	149308	437194	1.61	1.14	0.88	0.67
1-1/2	149310	437195	2.43	1.62	1.27	1.87
2	149311	437196	3.07	1.97	1.52	3.74
*3	149313	437198	4.38	2.10	2.75	10.59
*4	149314	337001	5.37	2.50	3.29	20.12

* Only available in grey

DIMENSIONAL DATA

Stub Flange – Socket

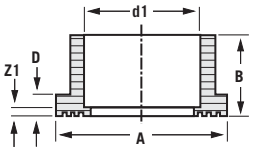

Size d1 (in)	Significant Number	Product Code	Critical Dimensions (in)				
			Z1	A	B	D	Wt. (oz)
1	135308	437181	0.23	1.97	1.14	0.40	0.67
1-1/2	135310	437182	0.12	2.87	1.57	0.32	2.12
2	135311	437183	0.31	3.54	1.84	0.55	3.53
3	135313	437185	0.39	4.92	2.50	0.62	8.47
4	135314	437186	0.43	5.90	2.95	0.70	13.06

Gasket – Stub Flange (Flat Neoprene)

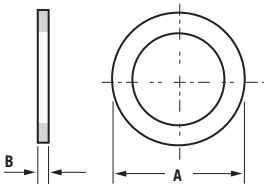

Size (in)	Significant Number	Product Code	Critical Dimensions (in)		
			A	B	Wt. (oz)
1	411308	437325	1.97	0.11	0.14
1-1/2	411310	437326	2.87	0.11	0.25
2	411311	437327	3.54	0.11	0.35
3	411313	437329	4.92	0.11	1.06
4	411314	437330	5.90	0.15	1.41

Backing Ring – Galvanized Mild Steel (ASA 150)

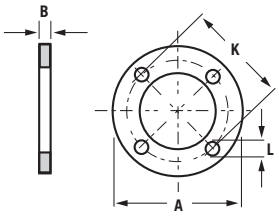

Size (in)	Significant Number	Product Code	Critical Dimensions (in)					
			A	B	K	L	No Holes	Wt. (oz)
1	416308	437331	4.52	0.24	3.35	0.55	4	10.55
1-1/2	425106	437430	5.90	0.24	4.33	0.71	4	13.12
2	425107	337431	6.02	0.32	4.75	0.75	4	20.88
3	425109	337433	7.52	0.32	6.00	0.75	4	37.46
4	425110	337434	9.06	0.35	7.50	0.75	4	42.05

DIMENSIONAL DATA

Blind Flange – ASA 150

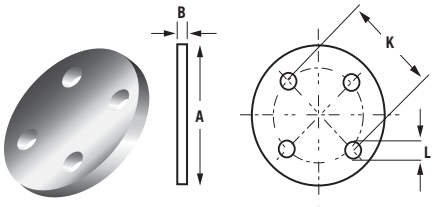

Size (in)	Significant Number	Product Code	Critical Dimensions (in)					
			A	B	K	L	No Holes	Wt. (oz)
*3	325109	337364	7.24	0.75	6.00	0.75	4	18.34
*4	325110	337365	8.50	0.75	7.50	0.75	8	25.40

* Blind flanges are gray in color.

Socket Union – Socket

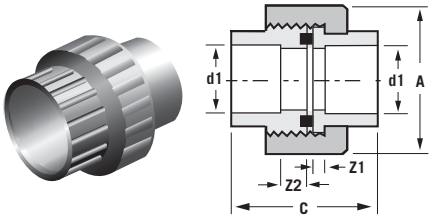

Size d1 (in)	Significant Number	Product Code	Critical Dimensions (in)				
			Z1	Z2	A	C	Wt. (oz)
1/2	205306	437234	0.11	0.39	1.61	1.85	0.79
3/4	205307	437235	0.11	0.39	1.96	2.09	1.09
1	205308	437236	0.35	0.39	2.24	2.52	1.58
1-1/2	205310	437237	0.47	0.55	3.15	3.62	3.80
2	205311	437238	0.55	0.70	4.01	4.41	4.08

NOTE: O-ring gasket – chloroprene rubber. (Viton O-rings are available for conversion.)

Composite Union – Air-Line to Brass – Socket x Male MPT

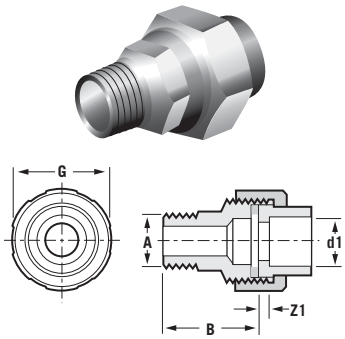

Size d1 (in)	Significant Number	Product Code	Critical Dimensions (in)				
			Z1	A	B	G	Wt. (oz)
1/2	217306	437247	0.11	0.50	2.13	1.57	4.90
3/4	217307	437248	0.11	0.75	2.91	1.88	7.00
1	217308	437249	0.31	1.00	3.39	2.16	10.50
1-1/2	217310	437250	0.47	1.25	4.29	3.07	22.80
2	217311	437251	0.55	2.00	4.92	3.44	33.30

NOTE: Seal – Chloroprene rubber. Retaining nut – Brass.
NOTE: Obsolete when stock is depleted.

New Composite Union – Air-Line to Brass – Socket x Male MPT

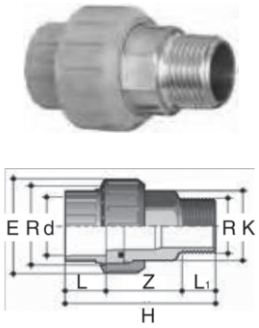

Size (in)	Significant Number	Product Code	Critical Dimensions (in)						
			L1	Z	L	H	K	E	Wt. (oz)
1/2	223306	437002	0.53	1.40	0.63	2.56	0.98	1.61	4.37
3/4	223307	437003	0.59	1.52	0.75	2.85	1.26	1.97	7.69
1	223308	437004	0.69	1.59	0.87	3.15	1.50	2.28	9.67
1-1/2	223310	437005	0.77	1.99	1.22	3.98	2.17	3.11	22.82
2	223311	437006	0.94	2.38	1.50	4.82	2.72	3.86	39.65

DIMENSIONAL DATA

Female Threaded Adapter – Socket/Spigot x Female BSPT, Reinforced

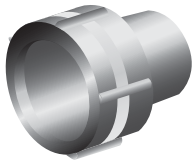

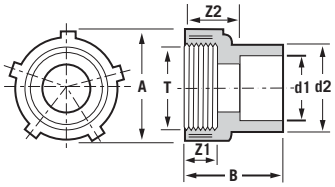

Size (in)		Significant Number	Product Code	Critical Dimensions (in)					
d1	d2			T	Z1	Z2	A	B	Wt. (oz)
1	1-1/2	153341	437231	1.50	0.84	1.26	2.48	2.34	3.81
1-1/2	2	153343	437232	2.00	1.01	1.54	3.05	2.81	5.97

NOTE: This adapter is designed for spigot or socket joining. For an example of the use of the adapter, see page 21

Female Socket Adapter – Socket x Female BSPT, Reinforced (metric x IPS)

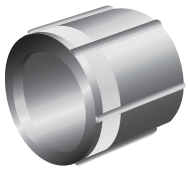

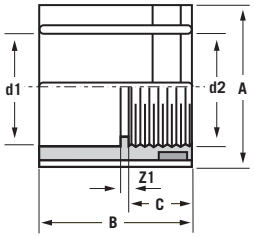

Size (in)		Significant Number	Product Code	Critical Dimensions (in)				
d1	d2			A	B	C	Z1	Wt. (oz)
1/2 x 1/2		101306	437034	1.10	1.41	0.62	0.15	0.42
3/4 x 3/4		101307	437035	1.41	1.57	0.70	0.15	0.67
1 x 1		101308	437036	1.69	1.85	0.82	0.15	1.40

Plug – Male BSPT

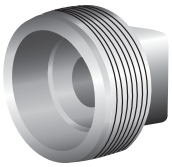

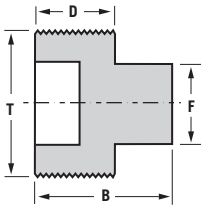

Size (in)	Significant Number	Product Code	Critical Dimensions (in)			
			B	D	F	Wt. (oz)
1/2	155102	337264	0.92	0.55	0.50	0.20
3/4	155103	337265	1.09	0.57	0.55	0.30
1	155104	337266	1.81	0.67	0.68	0.40
1-1/4	155105	337267	13.8	0.85	0.87	1.10
1-1/2	155106	337268	1.50	0.94	1.06	1.30
2	155107	337269	1.77	1.03	1.44	1.80

DIMENSIONAL DATA

Wall Bracket – Brass Body – ABS Socket x Brass BSPT

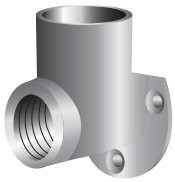

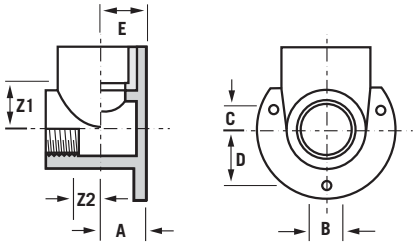

Size (in)	Significant Number	Product Code	Critical Dimensions (in)								
			T	Z1	Z2	A	B	C	D	E	Wt. (oz)
1/2	422327	437335	0.50	0.70	0.33	0.61	0.17	0.23	0.74	0.76	6.50
3/4	422329	437337	0.75	0.74	0.43	0.66	0.17	0.19	0.94	0.27	7.10

Wall Bracket – Multiport – Aluminum MPT (Inlet) x FPT (Outlet)

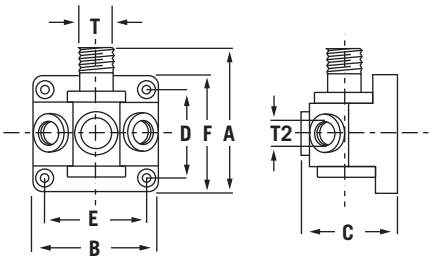

Size (in)	Significant Number	Product Code	Critical Dimensions (in)								
			A	B	C	D	E	F	T1	T2	Wt. (oz)
3/4 x 1/2	429122	437338	2.99	3.30	3.70	2.20	2.55	2.20	3/4 npt	1/2 npt	11.60

NOTE: Obsolete when stock is depleted

Wall Bracket – Multiport – Reinforced Polymide Body, Brass Threads

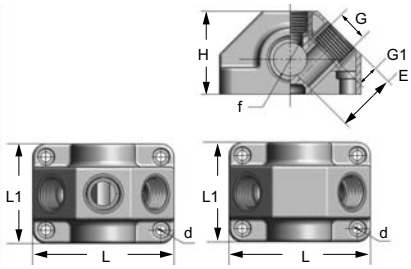

Inlet Size (in)	Outlet Size (in)	Significant Number	Product Code	Critical Dimensions (in)					
				d	E	G1	H	L	L1
1/2	2 x 1/2 Female BSP	430102	437000	0.24	1.42	0.55	1.97	3.35	2.36
3/4	3 x 1/2 Female BSP	430103	437001	0.24	1.42	0.55	1.97	3.35	2.36

DIMENSIONAL DATA

Gray VKD Ball Valve

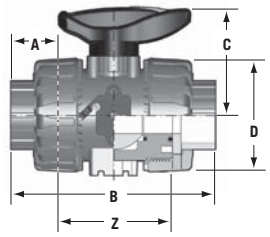

Size (in)	Significant Number	Product Code	Critical Dimensions (in)					
			A	B	C	D	Z	Wt. (oz)
1/2	882306	437451	0.63	4.06	1.93	2.17	2.80	0.45
3/4	882307	437452	0.75	4.53	2.32	2.60	3.03	0.69
1	882308	437453	0.87	5.04	2.60	2.95	3.30	1.00
1-1/2	882310	437454	1.22	6.46	3.43	3.94	4.02	1.96
2	882311	437455	1.50	7.83	3.98	4.80	4.84	3.37

FK Butterfly Valve

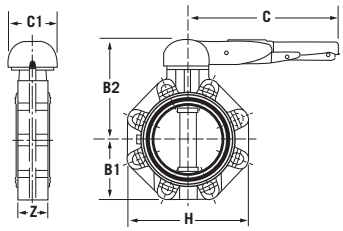

Size (in)	Significant Number	Product Code	Critical Dimensions (in)						
			B1	B2	C	C1	H	Z	Wt. (lbs)
2	681107	337656	2.76	5.63	6.89	3.94	5.79	1.69	2.38
3	683109	337657	3.66	7.00	10.70	4.33	7.28	1.93	4.11
4	681110	337658	4.21	7.56	10.70	4.33	8.31	2.20	4.88
6	681112	337659	5.30	8.86	12.99	4.33	10.60	2.80	8.47
8	681113	337660	6.34	10.71	16.54	4.80	12.72	2.80	14.35

Air-Line Solvent Cement

Size	Product Code	Significant Number
1 pin	437037	461390
1 quart	437038	461391

MEK Cleaner

Size	Product Code	Significant Number
1 pin	337468	461397
1 quart	337469	461398

NOTES

SECTION SIX: SPECIFICATIONS

Sample Specifications

General

Duraplus ABS Air-Line is designed for industrial compressed air pipe applications where the extremely high-impact resistance and ductility of the material offers some insurance against internal and external shock loadings and site abuse conditions. Its unique combination of ABS properties – non-toxicity, purity, corrosion- and chemical-resistance, toughness, low-hydraulic resistance, and the ability to perform over a wide temperature range 40°F – 120°F (4°C – 49°C), ensures excellent in-service performance and system life.

Material Specifications

Pipe shall be manufactured from an Acrylonitrile Butadiene Styrene (ABS) blend, with a co-extruded liner. Fitting shall be manufactured from an ABS blend.

Material for both pipe and fittings shall be designed with a 2 to 1 safety factor for a 30 year lifespan when operated under continuous pressure. Pipe and fittings are capable of withstanding a continuous working pressure of 185psi at 73°F (1275kPa at 23°C) in accordance with ASTM D2282 and carry a DIN 4102-B2 fire rating.

The material shall have an izod impact resistance value of no less than 8.5 ft.lb/in at 73°F when tested in accordance with ASTM D256, method 'A'. Pipe bore contains a co-extruded liner and fittings are manufactured using an alloy blend of ABS and the liner material.

Pipe

Pipes shall be manufactured by IPEX and designed in metric sizes that comply with the dimensional requirements of DIN 8062, and ISO 161/1.

Fittings

Fittings shall be of the socket type, designed for solvent welding as supplied by IPEX.

Fittings shall be designed and manufactured to withstand the continuous pressures applicable to the maximum pressure rating of the pipe. The sockets and fittings shall have a 0.50º taper, the diameter decreasing from the mouth to the root.

Ball Valves – VKD

The valve body, stem, ball and unions shall be made of Duraplus® ABS compound which shall meet or exceed the requirements of cell classification 43234 according to ASTM D3965.

Ball valves shall be double-blocking type with o-ring cushions under the PTFE seats, in-line micro adjustment capability and incorporate a spanner wrench in the handle

Butterfly Valves – FK

The valve body shall also be made of glass reinforced polypropylene (GRPP) obtained from homopolymer polypropylene (PPH).

The valve disc shall also be made of ABS compound.

All butterfly valves shall have non wetted stainless steel shafts and a wafer or lug design with ANSI 150 flange connections. The liner shall completely isolate the valve body from the process flow and act as a flange gasket on both sides of the valve.

Solvent Cement

All joints shall be made with Blue Duraplus Air-Line ABS solvent cement as supplied by IPEX. The solvent cement shall be designed to withstand continuous applied pressures up to 185psi at 73°F.

Design and Installation

The design and installation of ABS pressure systems shall be performed in accordance with the recommendations detailed in the Handling and Installation section of this manual and in local and national regulations where applicable. To ensure the full integrity of the completed system, all components shall be supplied by IPEX.

NOTES

APPENDIX A: CONVERSION CHARTS

Contents of Pipe

Capacities in Cubic Feet and United States Gallons (231 Cubic Inches) per foot of Length											
Dia. in.	Dia. ft.	For 1 Foot Length		Dia. in.	Dia. ft.	For 1 Foot Length		Dia. in.	Dia. ft.	For 1 Foot Length	
		ft.^{3} Also Area in. ft.^{2}	U.S. Gal. (231 in.^{3})			ft.^{3} Also Area in. ft.^{2}	U.S. Gal. (231 in.^{3})			ft.^{3} Also Area in. ft.^{2}	U.S. Gal. (231 in.^{3})
1/4	0.0208	0.0003	0.0026	4-1/4	0.3542	0.0985	0.7370	10-1/2	0.8750	0.6013	4.4980
5/16	0.0260	0.0005	0.0040	4-1/2	0.3750	0.1105	0.8263	10-3/4	0.8958	0.6303	4.7140
3/8	0.0313	0.0008	0.0057	4-3/4	0.3958	0.1231	0.9205	11	0.9167	0.6600	4.9370
7/16	0.0365	0.0010	0.0078	5	0.4167	0.1364	1.0200	11-1/4	0.9375	0.6903	5.1630
1/2	0.0417	0.0014	0.0102	5-1/4	0.4375	0.1503	1.1240	11-1/2	0.9583	0.7213	5.3950
9/16	0.0469	0.0017	0.0129	5-1/2	0.4583	0.1650	1.2340	11-3/4	0.9792	0.7530	5.6330
5/8	0.0521	0.0021	0.0159	5-3/4	0.4792	0.1803	1.3490	12	1.0000	0.7854	5.8760
11/16	0.0573	0.0026	0.0193	6	0.500	0.1963	1.4690	12-1/2	1.0420	0.8523	6.3750
3/4	0.0625	0.0031	0.0230	6-1/4	0.5208	0.2130	1.5940	13	1.0830	0.9218	6.8950
13/16	0.0677	0.0036	0.0270	6-1/2	0.5417	0.2305	1.7240	13-1/2	1.1250	0.9940	7.4350
7/8	0.0729	0.0042	0.0312	6-3/4	0.5625	0.2485	1.8590	14	1.1670	1.0690	7.9970
15/16	0.0781	0.0048	0.0359	7	0.5833	0.2673	1.9990	14-1/2	1.2080	1.1470	8.5780
1	0.0833	0.0055	0.0408	7-1/4	0.6042	0.2868	2.1440	15	1.2500	1.2270	9.1800
1-1/4	0.1042	0.0085	0.0638	7-1/2	0.6250	0.3068	2.2950	15-1/2	1.2920	1.3100	9.8010
1-1/2	0.1250	0.0123	0.0918	7-3/4	0.6458	0.3275	2.4500	16	1.3330	1.3960	10.4400
1-3/4	0.1458	0.0168	0.1250	8	0.6667	0.3490	2.6110	16-1/2	1.3750	1.4850	11.1100
2	0.1667	0.0218	0.1632	8-1/4	0.6875	0.3713	2.7770				
2-1/4	0.1875	0.0276	0.2066	8-1/2	0.7083	0.3940	2.9480				
2-1/2	0.2083	0.0341	0.2550	8-3/4	0.7292	0.4175	3.1250				
2-3/4	0.2292	0.0413	0.3085	9	0.7500	0.4418	3.3050				
3	0.2500	0.0491	0.3673	9-1/4	0.7708	0.4668	3.4920				
3-1/4	0.2708	0.0576	0.4310	9-1/2	0.7917	0.4923	3.6820				
3-1/2	0.2917	0.0668	0.4998	9-3/4	0.8125	0.5185	3.8790				
3-3/4	0.3125	0.0767	0.5738	10	0.8333	0.5455	4.0810				
4	0.3333	0.0873	0.6528	10-1/4	0.8542	0.5730	4.2860				

Volume

Volume of a pipe is computed by: $V = \frac{1}{4} ID^2 \times \pi \times L \times 12$

Where: V = volume (in cubic inches)

ID = inside diameter (in inches)

π = 3.14159

L = length of pipe (in feet)

Weight

1 U.S. gallon @ 50°F..... 8.33 lbs. x sg

1 cubic foot ..... 62.35 lbs. x sg

..... 7.48 U.S. gal.

1 cu. ft. of water @ 50°F . 62.41 lbs.

1 cu. ft. of water @ 39.2°F 62.43 lbs.

(39.2°F is water temp. at its greatest density)

1 kilogram ..... 2.2 lbs.

1 imperial gallon of water. 10.0 lbs.

1 pound..... 12 U.S. gal ÷ sg

..... .016 cu. ft. ÷ sg

Capacity or Flow

1 U.S. gallon per minute (gpm) 0.134 cfm

.....500 lb. per hr. x sp. gr.

.....500 lb. per hr. 1 gpm ÷ sp. gr.

1 cu. ft. per minute (cfm) .....449 gph

1 cu. ft. per second (cfs) .....449 gpm

1 acre foot per day .....227 gpm

1 acre inch per hour .....454 gpm

1 cubic meter per minute .....264.2 gpm

1,000,000 gal. per day .....595 gpm

$$\text{Brake H.P.} = \frac{\text{(gpm) (total head in ft.) (specific gravity)}}{\text{(3960) (pump eff.)}}$$

APPENDICES

CONVERSION CHARTS

Pressure Conversion BY FACTOR TO OBTAIN

Multiply Given Number of →

Given	lb./in.^{2}	in.H_2O (at +39.2°F)	cmH_2O (at +4°C)	in. Hg (at +32°F)	mm Hg (Torr) (at 0°C)	dyne/cm^2 (1m bar)	newton/m^2 (PASCAL)	kgm/cm^2	bar	atm. (A_n)	lb./ft.^{2}	ft.H_2O (at +39.2°F)
lb./in.2	1.000	2.7680×10^{1}	7.0308×10^{1}	2.0360	5.1715×10^{1}	6.8948×10^{4}	6.8948×10^{3}	7.0306×10^{-2}	6.8947×10^{-2}	6.8045×10^{-2}	1.4400×10^{2}	2.3067
in.H20 (at +39.2°F)	3.6127×10^{-2}	1.0000	2.5400	7.3554×10^{-2}	1.8683	2.49808×10^{3}	2.4908×10^{2}	2.5399×10^{-3}	2.4908×10^{-3}	2.4582×10^{-3}	5.2022	8.3333×10^{-2}
cm H_20 (at +4°C)	1.4223×10^{-2}	0.3937	1.0000	2.8958×10^{-2}	0.7355	9.8064×10^{2}	9.8064×10^{1}	9.9997×10^{-4}	9.8064×10^{-4}	9.6781×10^{-4}	2.0481	3.2808×10^{-2}
in. Hg (at +32°F)	4.9116×10^{-1}	1.3596×10^{1}	3.4532×10^{1}	1.0000	2.5400×10^{1}	3.3864×10^{4}	3.3864×10^{3}	3.4532×10^{-2}	3.3864×10^{-2}	3.3421×10^{-2}	7.0727×10^{1}	1.1330
mm Hg (Torr) (at 0°C)	1.9337×10^{-2}	5.3525×10^{-1}	1.3595	3.9370×10^{-2}	1.0000	1.3332×10^{3}	1.3332×10^{2}	1.3595×10^{-3}	1.3332×10^{-3}	1.3158×10^{-3}	2.7845	4.4605×10^{-2}
dyne/cm^2 (1m bar)	1.4504×10^{5}	4.0147×10^{-4}	1.0197×10^{-3}	2.9530×10^{-5}	7.5006×10^{-4}	1.0000	1.0000×10^{-1}	1.0197×10^{-6}	1.0000×10^{-6}	9.8692×10^{-7}	2.0886×10^{-3}	3.3456×10^{-5}
newton/m^2 (PASCAL)	1.4504×10^{-4}	4.0147×10^{-3}	1.0197×10^{-2}	2.9530×10^{-4}	7.5006×10^{-3}	1.0000×10^{1}	1.0000	1.0197×10^{-5}	1.0000×10^{-5}	9.8692×10^{-6}	2.0885×10^{-2}	3.3456×10^{-4}
kgm/cm^2	1.4224×10^{1}	3.9371×10^{2}	1.00003×10^{3}	2.8959×10^{1}	7.3556×10^{2}	9.8060×10^{5}	9.8060×10^{4}	1.0000	9.8060×10^{-1}	9.678×10^{-1}	2.0482×10^{3}	3.2809×10^{1}
bar	1.4504×10^{1}	4.0147×10^{2}	1.0197×10^{3}	2.9530×10^{1}	7.5006×10^{2}	1.0000×10^{6}	1.0000×10^{5}	1.0197	1.0000	9.8692×10^{-1}	2.0885×10^{3}	3.3456×10^{1}
atm. (An)	1.4696×10^{1}	4.0679×10^{2}	1.0333×10^{3}	2.9921×10^{1}	7.6000×10^{2}	1.0133×10^{6}	1.0133×10^{5}	1.0332	1.0113	1.0000	2.1162×10^{3}	3.3900×10^{1}
lb./ft.^{2}	6.9445×10^{-3}	1.9223×10^{-1}	4.882×10^{-1}	1.4139×10^{-2}	3.591×10^{-1}	4.7880×10^{2}	4.7880×10^{1}	4.8824×10^{-4}	4.7880×10^{-4}	4.7254×10^{-4}	1.0000	1.6019×10^{-2}
ft. H_20 (at +39.2°F)	4.3352×10^{-1}	1.2000×10^{1}	3.0480×10^{1}	8.826×10^{-1}	2.2419×10^{1}	2.9890×10^{4}	2.9890×10^{3}	3.0479×10^{-2}	2.9890×10^{-2}	2.9499×10^{-2}	6.2427×10^{1}	1.0000

Decimal and Millimeter Equivalents of Fractions

Inches Fractions	Inches Decimals	mm	Inches Fractions	Inches Decimals	mm	Inches Fractions	Inches Decimals	mm	Inches Fractions	Inches Decimals	mm
1/64	.015625	.397	17/64	65625	6.747	33/64	.515625	13.097	49/64	.765625	19.447
1/32	03125	.794	9/32	.28125	7.144	17/32	.53125	13.494	25/32	.78125	19.844
3/64	.046875	1.191	19/64	.296875	7.541	35/64	.546875	13.891	51/64	.796875	20.241
1/16	.0625	1.588	5/16	.3125	7.938	9/16	.5625	14.288	13/16	.8125	20.638
5/64	.078125	1.984	21/64	.328125	8.334	37/64	.578125	14.684	53/64	.828125	21.034
3/32	.09375	2.381	11/32	.34375	8.731	19/32	.59375	15.081	27/32	.83475	21.431
7/64	.109375	2.778	23/64	.359375	9.128	39/64	.609375	15.478	55/64	.859375	21.828
1/8	.125	3.175	3/8	.375	9.525	5/8	.625	15.875	7/8	.875	22.225
9/64	.140625	3.572	25/64	.390625	9.922	41/64	.640625	16.272	57/64	.890625	22.622
5/32	.15625	3.969	13/32	.40625	10.319	21/32	.65625	16.669	29/32	.90625	23.019
11/64	.171875	4.366	27/64	.421875	10.716	43/64	.671875	17.066	59/64	.921875	23.416
3/16	.1875	4.763	7/16	.4375	11.113	11/16	.6875	17.463	15/16	.9375	23.813
13/64	.203125	5.159	29/64	.453125	11.509	45/64	.703125	17.859	61/64	.953125	24.209
7/32	21875	5.556	15/32	.46875	11.906	23/32	.71875	18.256	31/32	.96875	24.606
15/64	.23475	5.953	31/64	.484375	12.303	47/64	.734375	18.653	63/64	.984375	25.003
1/4	.250	6.350	1/2	.500	12.700	3/4	.750	19.050	1	1.000	25.400

CONVERSION CHARTS

Units of Length	Multiply units in left column by proper factor below							
	in.	ft.	yd.	mile	mm	cm	m	km
1 inch	1	0.0833	0.0278	–	25.4	2.540	0.0254	–
1 foot	12	1	0.3333	–	304.8	30.48	0.3048	–
1 yard	36	3	1	–	914.4	91.44	0.9144	–
1 mile	–	5280	1760	1	–	–	1609.3	1.609
1 millimeter	0.0394	0.0033	–	–	1	0.100	0.001	–
1 centimeter	0.3937	0.0328	0.0109	–	10	1	0.01	–
1 meter	39.37	3.281	1.094	–	1000	100	1	0.001
1 kilometer	–	3281	1094	0.6214	–	–	1000	1

(1 micron = 0.001 millimeter)

Units of Weight	Multiply units in left column by proper factor below						
	grain	oz.	lb.	ton	gram	kg	metric ton
1 grain	1	–	–	–	0.0648	–	–
1 ounce	437.5	1	0.0625	–	28.35	0.0283	–
1 pound	7000	16	1	0.0005	453.6	0.4536	–
1 ton	–	32,000	2000	1	–	907.2	0.9072
1 gram	15.43	0.0353	–	–	1	0.001	–
1 kilogram	–	35.27	2.205	–	1000	1	0.001
1 metric ton	–	35,274	2205	1.1023	–	1000	1

Units of Density	Multiply units in left column by proper factor below				
	lb./in.^{3}	lb./ft.^{3}	lb./gal.	g/cm^3	g/liter
1 pound/in.^{3}	1	1728	231.0	27.68	27,680
1 pound/ft.^{3}	–	1	0.1337	0.0160	16.019
1 pound/gal.	0.00433	7.481	1	0.1198	119.83
1 gram/cm^3	0.0361	62.43	8.345	1	1000.0
1 gram/liter	–	0.0624	0.00835	0.001	1

Units of Area	Multiply units in left column by proper factor below						
	in.^{2}	in.^{2}	acre	mile^2	cm^2	m2	hectare
1 inch^2	1	1	–	–	6.452	–	–
1 foot^2	144	144	–	–	929.0	0.0929	–
1 acre	–	–	1	0.0016	–	4047	0.4047
1 mile^2	–	–	640	1	–	–	259.0
1 centimeter^2	0.1550	0.1550	–	–	1	0.0001	–
1 meter^2	1550	1550	–	–	10,000	1	–
1 hectare	–	–	2.471	–	–	10,000	1

Units of Volume	Multiply units in left column by proper factor below							
	in.^{3}	ft.^{3}	yd.^{3}	cm.^{3}	meter^3	liter	U.S. gal.	Imp. gal.
1 inch^3	1	–	–	16.387	–	0.0164	–	–
1 foot^3	1728	1	0.0370	28,317	0.0283	28.32	7.481	6.229
1 yard^3	46,656	27	1	–	0.7646	764.5	202.0	168.2
1 centimeter^3	0.0610	–	–	1	–	0.0010	–	–
1 meter^3	61,023	35.31	1.308	1,000,000	1	999.97	264.2	220.0
1 liter	61.025	0.0353	–	1000.028	0.0010	1	0.2642	0.2200
1 U.S. gallon	231	0.1337	–	3785.4	–	3.785	1	0.8327
1 Imp. gallon	277.4	0.1605	–	4546.1	–	4.546	1.201	1

CONVERSION CHARTS

Units of Pressure	Multiply units in left column by proper factor below							
	lbs./in.^{2}	lb./ft.^{2}	Int. etc.	kg/cm^2	mm Hg at 32°F	in. Hg at 32°F	ft. water at 39.2°F	kPa
lb./in.^{2}	1	144	–	0.0703	51.713	2.0359	2.307	6.894
lb./ft.^{2}	0.00694	1	–	–	0.3591	0.01414	0.01602	0.04788
Int. etc.	14.696	2116.2	–	1.0333	760	29.921	33.90	–
kg/cm^2	14.223	2048.1	0.9678	1	735.56	28.958	32.81	98.066
mm Hg	0.0193	2.785	–	–	1	0.0394	0.0446	0.1333
in Hg	0.4912	70.73	0.0334	0.0345	25.400	1	1.133	3.386
ft H20	0.4335	62.42	–	0.0305	22.418	0.8826	1	2.988
kPa	0.00145	20.89	–	0.010169	7.5006	0.2953	0.3346	1

Units of Energy	Multiply units in left column by proper factor below					
	ft.-lb.	BTU	g. cal.	Joule	kw-hr.	hp-hr.
1 foot-pound	1	0.001285	0.3240	1.3556	–	–
1 BTU	778.2	1	252.16	1054.9	–	–
1 gram calorie	3.0860	0.003966	1	4.1833	–	–
1 Int. Joule	0.7377	0.000948	0.2390	1	–	–
1 Int. kilowatt-hour	2,655,656	3412.8	860,563	–	1	1.3412
1 horsepower-hour	1,980,000	2544.5	641,617	–	0.7456	1

Units of Specific Pressure	Multiply units in left column by proper factor below				
	Absolute Joule/g	Int. Joule/g	cal/g	Int. cal/g	BTU/lb.
1 absolute Joule/gram	1	0.99984	0.23901	0.23885	0.42993
1 Int. Joule/gram	1.000165	1	0.23904	0.23892	0.43000
1 calorie/gram	4.1840	4.1833	1	0.99935	1.7988
1 int. calorie/gram	4.1867	4.1860	1.00065	1	1.8000
1 BTU/lb.	2.3260	2.3256	0.55592	0.55556	1

Units of Power (rates of energy use)	Multiply units in left column by proper factor below							
	hp	watt	kw	BTU/min.	ft.-lb./sec.	ft.-lb./min.	g. cal/sec.	metric hp
1 horsepower	1	75.7	0.7475	42.41	550	33.000	178.2	1.014
1 watt	–	1	0.001	0.0569	0.7376	44.25	0.2390	0.00136
1 kilowatt	1.3410	1000	1	56.88	737.6	44,254	239.0	1.360
1 BTU per minute	–	–	–	1	12.97	778.2	4.203	0.0239
1 metric hp	0.9863	735.5	0.7355	41.83	542.5	32.550	175.7	1

Units of Refrigeration	Multiply units in left column by proper factor below				
	BTU (IT) /min.	BTU (IT) /hr.	kg cal/hr.	ton (U.S.) comm	ton (Brit.) comm
1 ton (U.S.) comm	200	12,000	3025.9	1	0.8965
1 ton (Brit.) comm	223.08	13,385	3375.2	1.1154	1

NOTE: BTU is International Steam Table BTU (IT).

CONVERSION CHARTS

Temperature Conversion									
°F	°C	°F	°C	°F	°C	°F	°C	°F	°C
-459.4	-273	1	-17.2	61	16.1	300	149	900	482
-450	-268	2	-16.7	62	16.7	310	154	910	488
-440	-262	3	-16.1	63	17.2	320	160	920	493
-430	-257	4	-15.6	64	17.8	330	166	930	499
-420	-251	5	-15.0	65	18.3	340	171	940	504
-410	-246	6	-14.4	66	18.9	350	177	950	510
-400	-240	7	-13.9	67	19.4	360	182	960	516
-390	-234	8	-13.3	68	20.0	370	188	970	521
-380	-229	9	-12.8	69	20.6	380	193	980	527
-370	-223	10	-12.2	70	21.1	390	199	990	532
-360	-218	11	-11.7	71	21.7	400	204	1000	538
-350	-212	12	-11.1	72	22.2	410	210	1020	549
-340	-207	13	-10.6	73	22.8	420	215	1040	560
-330	-201	14	-10.0	74	23.3	430	221	1060	571
-320	-196	15	-9.4	75	23.9	440	227	1080	582
-310	-190	16	-8.9	76	24.4	450	232	1100	593
-300	-184	17	-8.3	77	25.0	460	238	1120	604
-290	-179	18	-7.8	78	25.6	470	243	1140	616
-280	-173	19	-7.2	79	26.1	480	249	1160	627
-273	-169	20	-6.7	80	26.7	490	254	1180	638
-270	-168	21	-6.1	81	27.2	500	260	1200	649
-260	-162	22	-5.6	82	27.8	510	266	1220	660
-250	-157	23	-5.0	83	28.3	520	271	1240	671
-240	-151	24	-4.4	84	28.9	530	277	1260	682
-230	-146	25	-3.9	85	29.4	540	282	1280	693
-220	-140	26	-3.3	86	30.0	550	288	1300	704
-210	-134	27	-2.8	87	30.6	560	293	1350	732
-200	-129	28	-2.2	88	31.1	570	299	1400	760
-190	-123	29	-1.7	89	31.7	580	304	1450	788
-180	-118	30	-1.1	90	32.2	590	310	1500	816
-170	-112	31	-0.6	91	32.8	600	316	1550	843
-160	-107	32	0.0	92	33.3	610	321	1600	871
-150	-101	33	0.6	93	33.9	620	327	1650	899
-140	-96	34	1.1	94	34.4	630	332	1700	927
-130	-90	35	1.7	95	35.0	640	338	1750	954
-120	-84	36	2.2	96	35.6	650	343	1800	982
-110	-79	37	2.8	97	36.1	660	349	1850	1010
-100	-73	38	3.3	98	36.7	670	354	1900	1038
-90	-68	39	3.9	99	37.2	680	360	1950	1066
-80	-62	40	4.4	100	37.8	690	366	2000	1093
-70	-57	41	5.0	110	43	700	371	2050	1121
-60	-51	42	5.6	120	49	710	377	2100	1149
-50	-46	43	6.1	130	54	720	382	2150	1177
-40	-40	44	6.7	140	60	730	388	2200	1204
-30	-34	45	7.2	150	66	740	393	2250	1232
-20	-29	46	7.8	160	71	750	399	2300	1260
-10	-23	47	8.3	170	77	760	404	2350	1288
0	-17.8	48	8.9	180	82	770	410	2400	1316
		49	9.4	190	88	780	416	2450	1343
		50	10.0	200	92	790	421	2500	1371
		51	10.6	210	99	800	427	2550	1399
		52	11.1	212	100	810	432	2600	1427
		53	11.7	220	104	820	438	2650	1454
		54	12.2	230	110	830	443	2700	1482
		55	12.8	240	116	840	449	2750	1510
		56	13.3	250	121	850	454	2800	1538
		57	13.9	260	127	860	460	2850	1566
		58	14.4	270	132	870	466	2900	1593
		59	15.0	280	138	880	471	2950	1621
		60	15.6	290	143	890	477	3000	1649

The following formulas may also be used for converting Celsius or Fahrenheit degrees into the other scales.

Degrees Celsius $°C = \frac{5}{9}(°F - 32)$

Degrees Fahr. $°F = \frac{9}{5}°C + 32$

Degrees Kelvin $°T = °C + 273.2$

Degrees Rankine $°R = °F + 459.7$

NOTES

SALES AND CUSTOMER SERVICE

IPEX U.S.A LLC
Toll free: (800) 463-9572
ipexna.com

About the IPEX Group of Companies

As leading suppliers of thermoplastic piping systems, the IPEX Group of Companies provides our customers with some of the largest and most comprehensive product lines. All IPEX products are backed by more than 50 years of experience. With state-of-the-art manufacturing facilities and distribution centers across North America, we have established a reputation for product innovation, quality, end-user focus and performance.

Markets served by IPEX group products are:

- Electrical systems
- Telecommunications and utility piping systems
- PVC, CPVC, PP, ABS, PEX, FR-PVDF and PE pipe and fittings (1/4" to 48")
- Industrial process piping systems
- Municipal pressure and gravity piping systems
- Plumbing and mechanical piping systems
- PE Electrofusion systems for gas and water
- Industrial, plumbing and electrical cements
- Irrigation systems

Products manufactured by IPEX Inc. and distributed in the United States by IPEX USA LLC.
Duraplus™ is a trademark of IPEX Branding Inc.

This literature is published in good faith and is believed to be reliable. However it does not represent and/or warrant in any manner the information and suggestions contained in this brochure. Data presented is the result of laboratory tests and field experience.

A policy of ongoing product improvement is maintained. This may result in modifications of features and/or specifications without notice.

IPEX
by aliaxis

MNINDPIP180504R
© 2018 IPEX IND0036U