Encase™

Find us in MasterSpec® a product of The American Institute of Architects

Our products are specified in BSD SpecLink www.bsdspeclink.com

Submittal Data Sheet

Job or Customer: .....

Engineer: .....

Contractor: .....

Submitted by: ..... Date

Approved by: ..... Date

Order No: ..... Date

Specification: .....

< STANDARDS >

ASTM D 4101

IPEX's Encase® electrofusion-joint system is the preferred solution for virtually all underground and critical area chemical waste applications. Pipe and fittings are made from non/ flame retardant Polypropylene. Encase® Material used in the manufacturing of Encase® pipe and fittings complies with the material requirements of ASTM D4101 Standard Specification for polypropylene for Injection and Extrusion materials.

pipe and fitting availability

1-1/2" – 8" Primary, 4" – 12" Secondary Pipe (20' FRPP Sch. 40 & 20' NFRPP Sch. 80)	1-1/2" – 8" DOUBLE WYE SOC x SPIGOT FRPP
1-/2" – 8" PRIMARY COUPLINGS	1-1/2" – 6" CLEANOUT ASSEMBLY FRPP
1-1/2" – 6" CLEANOUT, FRPP	1-1/2" – 8" REDUCER COUPLINGS
4" – 12" SECONDARY COUPLINGS	1-1/2" – 6" FLOOR DRAINS, SPIGOT
4" – 12" SECONDARY REPAIR COUPLINGS	1-1/2" – 6" ACCESS TEE, SOC x SPIGOT x SOC
1-1/2" – 8" 1/4 BEND SOC. X SPIGOT FRPP	1-1/2" – 8" P" TRAP FRPP
1-1/2" – 8" 1/8 BEND SOC. X SPIGOT FRPP	1-1/2" – 8" END SEALS, SOC x SPIGOT
1-1/2" – 12" ANSI 150 BOLT PATTERN BLIND FLANGES FRPP	1-1/2" – 8" COMBINATION WYE and 1/8 BEND FRPP

Note: Primary pipe sizes – 1-1/2" up to 8"
Secondary pipe sizes – 4" up to 12"

ADDITIONAL CORROSIVE WASTE PRODUCTS

FLOWAY™ ACID RESISTANT FLOOR DRAINS

NEUTRATANK® NEUTRALIZATION TANKS

PLENUMLINE™ FR-PVDF MECHANICAL JOINT ACID WASTE SYSTEM

LABLINE™ MECHANICAL JOINT ACID WASTE SYSTEM

ENFIELD® ELECTROFUSION ACID WASTE SYSTEM

ipexna.com
Toll Free: 866 473-9462

IPEX by aliaxis

DAINENCASE2023C

Installation Procedures

Points to Remember

For installation in cold weather, refer to the 'Cold Weather Fusion' procedure described later in this section. Before making the Enfield joint, it is important to check with an RMS meter, that the power source is providing between 96 and 162 volts @ 40 to 70 cycles with 11-amp capacity. The Enfusion machine provides for normal power variations, however generators should be checked to assure the correct output is being provided.

Ensure Enfusion control unit, pipe and fittings are allowed to thermalise before beginning installation.

Job Site Precautions

1. Do not use unit in a gaseous environment as there is a RISK OF EXPLOSION.
2. The unit is a Class 1 device, and must be used with a grounded power supply.
3. Only use a hydrostatic test on the system. **TESTING WITH AIR IS DANGEROUS FOR A POLYPROPYLENE (PP) ACID WASTE SYSTEM.**
4. Store pipe and fittings out of direct sunlight. If material is stored outside, it should be covered with a light colored opaque tarp. If the ambient temperature exceeds 100°F (37°C), make provisions to allow air to circulate beneath the tarp.
5. Handle the Enfusion Hand Held machine carefully. **DO NOT TAMPER!** Call your IPEX representative for machine service.
6. **DO NOT MIX BRANDS**. Good joints can only be made using Enfield pipe, fittings and clamps. Mixing brands voids all warranties.
7. Software version V1.19 on the handheld Enfusion control unit will automatically adjust the fusion cycle time to the ambient temperature. The pipe, fittings and Enfusion control unit processor must all be allowed to acclimatise to the same temperature.

Installation Procedures

Procedure

1. Completely unwind all cables from the Enfusion hand held machine's case before use.
2. Using a tube cutter with a wheel designed for plastic (saw and miter box can also be used as an alternative), cut the pipe square making sure to remove all burrs and loose material. Do not chamfer.
3. Using 60-grit emery cloth, prepare the end of the pipe by removing dirt and oil (important to obtain a good bonding surface) and roughing up an area equal to 1.5 times the fitting's socket depth. Clean the roughed up area with ethyl or isopropyl alcohol to ensure complete removal of grease and residue. Once treated do not handle this area of the pipe or allow it to get dirty.
4. Insert the pipe all the way to the stop at the bottom of the socket of the fitting.
5. Decide whether single or multiple joints are being made. In case of multiple joints consult the "Multiple Joints Fusion" section that follows for cable connections and maximum allowable number of simultaneous joints.
6. Loosely fit IPEX-supplied clamp(s) only over the hub(s) of the socket(s) to be fused (Figure 1).

FIGURE 1

Note: The clamp should be positioned flush with the edge of the fitting. The clamp must be tightened sufficiently to prevent the pipe from rotating inside the fitting. Wheel handle clamps should not be used.

7. Tighten the clamp(s). A tight clamp is essential to the quality of the joint. It should not be possible to rotate the pipe inside the fitting socket when the clamp is fully tightened.
8. Turn the Enfusion hand held control unit on and observe the copyright message and the software version being displayed as the machine runs a self-diagnostic test.
9. Following the "CONNECT LEADS AND FITTINGS" instruction on the display, connect the output leads (Figure 2). If required, connect link cable for multiple fusions.

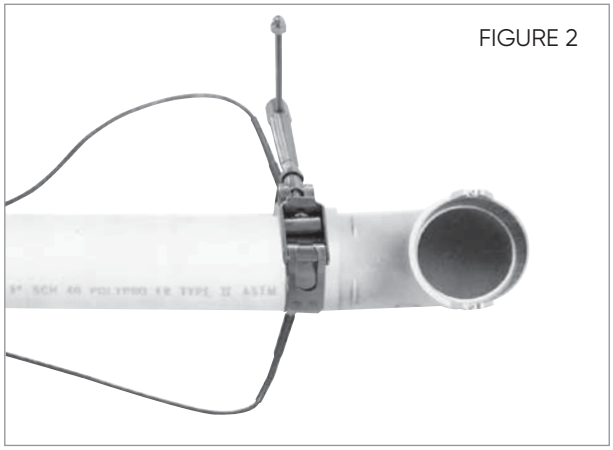

FIGURE 2

IPEX has developed a revision to its fusion machine software. Your machine will display the software version upon start up, the most recent version being V1.19 (2014). This revision removes the need to select a size range, and automatically adjusts the fusion time based on ambient temperature. Allow time for the machine pipe and couplings to acclimatise.

10. With software UPDATE V1.19 (2014)

    Once the leads are connected and you are ready to begin the fusion process. The machine will automatically check to ensure a connection is present and measure the ambient air temperature to set the fusion time.

    Without software UPDATE

    Machines that have NOT been updated will require you to "SELECT SIZE". IPEX recommends the use of the 3" to 12" size range for <u>all</u> fittings regardless of size. (example: 1.5" fittings should use the 3" to 12" selection)

11. To begin the fusion cycle press START. Time will begin to count down to zero.
12. Upon completion of the fusion cycle an audible alarm will sound and the message "WELD COMPLETE DISCONNECT LEADS" will be displayed. <u>A 30 second rest</u> period must be observed to allow the joint(s) to cool efore disconnecting the leads. The Enfusion machine will automatically reset, ready for the next operation.

13. Allow five additional minutes before removing the clamps so that the joint can sufficiently cool and properly cure.

Note: If leads are accidentally disconnected during the fusion process "Reconnect Lead & Press Start" will appear and a 120 second countdown will begin on the Enfusion hand held control unit. Reconnect leads and press START to continue the fusion cycle fusion.

If leads are reconnected during the countdown, the fusion machine will automatically assess how long the fusion cycle must be depending on how long the leads have been disconnected. If the leads are not reconnected during the countdown the machine will sound an audible alarm and restart the fusion cycle time. Prior to re-fusing, 1-1/2" – 3" fittings should cool for 5 minutes and 4" – 12" fittings should cool for 7 minutes. The Enfusion Control Unit should be reset by shutting it off and following instructions from step 8 onwards.

V1.19 Enfusion Hand Held Control Unit

To obtain V1.19 on your hand held, please contact an IPEX representative.

L2600 (Old Style Machine) Software UPDATE

This machine cannot be reprogrammed with the software update mentioned above. Due to the age of the machine and its components IPEX can no longer support updates to the machine's components or software.

Note: It is recommended that you replace these (L2600) machines with newer models. Until such time that a machine can be purchased, all joints regardless of size must be fused using the 4" size selection. Contact your local IPEX representative.

Cold Weather Fusion

Whenever possible pipe and fittings should be stored indoors. It is always preferable to perform pipe preparation and welding in a protected environment. However, should that not be possible, during cold weather (particularly at freezing or below) it is recommended that both pipe and fittings be stored in similar ambient temperature and conditions.

In cold weather applications, the lower operating temperature limit (0°F) of the Enfusion Hand-Held Control Unit must be strictly followed.

If ambient conditions during the installaiton fall below 0°F, postpone installation until ambient installation temperatures have increased to fall within the Operating Temperature Range of the Enfusion Hand-Held Control Unit.

Daily, weekly or seasonal temperature fluctuations may result in thermal expansion and/or contraction of the piping system. Refer to the System Design Considerations section of this manual for suitable techniques for accommodating thermal expansion and contraction and consult the Engineer of Record.

In addition, when the actual welding takes place in freezing or sub freezing environments, this cold weather pre fusion procedure must be followed.

NOTE: Enfusion Hand-Held Control Unit software update V1.19 will automatically adjust the fusion time as the ambient temperature changes. The following procedure is required for Enfusion Hand-Held Control Unit running software older than V1.19.

1. Follow steps 1 through 9 of Standard Enfield Electrofusion Installation.
2. When the "SELECT SIZE" prompt appears on the screen keep pushing the select button until all pipe sizes have been displayed.
3. Next will appear the first flash cycle: 1-1/2" to 2".
4. If the fitting(s) being welded is within this flash range, press START.
5. If the fitting(s) being welded is not included in this flash range, press the SELECT button one more time to display the second flash cycle: 3" through 12".
6. Press START.
7. Upon completion of the flash cycle, the display will show the "WELD COMPLETE DISCONNECT LEAD" message. Do not disconnect the leads.
8. Tighten clamps if necessary (see notes below).
9. Allow 1-1/2" to 3" joints to cool for 5 minutes, 4" to 8" joints to cool for 7 minutes and 10" to 12" joints to cool for 10 minutes before beginning the fusion cycle.
10. After cooling, continue with steps 10 through 14 of the Standard Enfield Electrofusion Installation procedure.

NOTES: Screen the joints being fused from the wind in very cold conditions to prevent heat loss.

Particular care must be taken to adequately tighten the clamps during extremely cold weather because of increased stiffness of the materials. One or two additional turns of the tightening screw might be required, above and beyond what is commonly sufficient in fair weather conditions. This is particularly true when welding large diameters.

For Enfusion Hand-Held Control units running software older than V1.19, the additional tightening of the clamps, designed to eliminate any gap between the pipe and the fitting, should be performed towards the end of the flash cycle.

However, care must be taken not to over-tighten to avoid distorting or crushing the fitting joint.

Marking of the pipe (indicating socket depth) is also recommended to assure that the pipe remains fully seated in the socket during the fusion cycle.

Multiple Joint Fusion – Enfield Software V1.19

Enfield Fusion Times

With the update to the fusion machine software (V1.19, 2014), fusion times are now standard across all sizes. Fusion times will however vary based on the ambient air temperature. As the temperature goes up the fusion time will go down, conversely, as the temperature goes down the time will go up. As a reference: at 73°F (23°C) the fusion time is 125 seconds.

The chart indicates the number of joints for each side that can be fused at one time.

Maximum Allowable Joints Per Size

Pipe Size (inches)	1-1/2	2	3	4	6	8	10	12
Max # of joints	8	6	4	3	2	1	1	1

Attach the connector leads and link cable leads to fitting terminals as shown in Figure 4. The link cables should be connected in series. Follow the fusion procedure, as outlined in steps 1-13, to complete the multiple fusion.

FIGURE 4

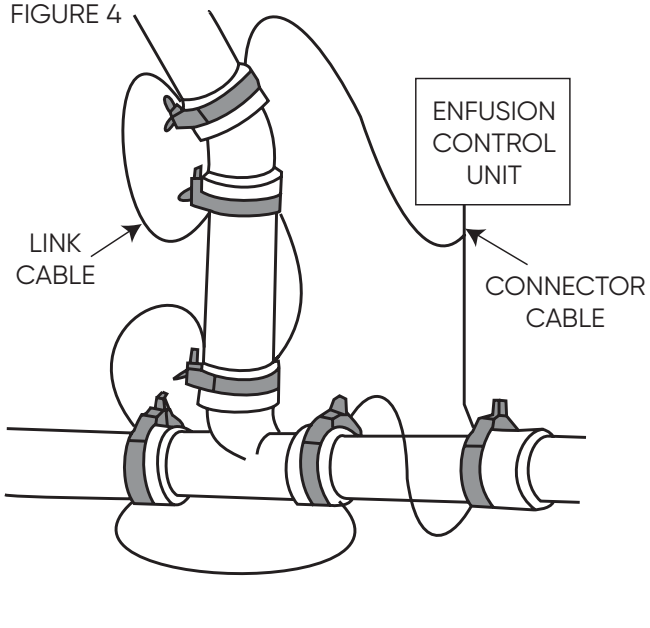

Note: Each joint being fused must have an IPEX T-Bar clamp flush with the other edge of the socket as shown previously in Figure 1.

Multiple Joints Across Different Sizes

With the update to the fusion machine software (V1.19, 2014), fusion times are now standard across all sizes, as such the combination of different size fittings that can be fused at the same time is much less restricted.

Any number of fittings or combination of sizes is now possible, provided that when you add the joint diameter sizes up – the total does not exceed 12.

Example A

1 x 8" and 1 x 4" = 12. ☑

Therefore one 8" fusion joint and one 4" fusion joint could be done at the same time.

Example B

1 x 8" and 2 x 3" = 14. ☒

Therefore one 8" fusion joint and two 3" fusion joints could not be done at the same time.

Example C

2 x 1.5" and 2 x 4" = 11. ☑

Therefore two 1.5" fusion joints and two 4" fusion joints could be done at the same time.

Example D

1 x 2" and 2 x 6" = 14. ☒

Therefore one 2" fusion joint and two 6" fusion joints could not be done at the same time.

Multiple Joint Fusion – Enfield Software V1.17 and older

The chart indicates the maximum number of joints (of one size) that can be fused at a time.

Maximum Allowable Joints Per Size

Pipe Size (inches)	1-1/2	2	3	4	6	8	10	12
Max # of joints	10	8	4	3	2	1	1	1

Attach the connector leads and link cable leads to fitting terminals as shown in Figure 6. The link cables should be connected in series. Follow the fusion procedure, as outlined in steps 1-14, to complete the multiple fusion.

NOTE: Each joint being fused must have an IPEX clamp flush with the outer edge of the socket.

Multiple Size Joint Fusion

The new hand held control unit utilizes fusion size ranges. These ranges adjust fusion time and output for two groups of fittings; Group A: 1-1/2" to 2" and Group B: 3" to 12". When fusing multiple joints it is possible to fuse different sizes as long as they are in the same Group and their diameter sizes, when added together, do not exceed an equivalent total of 12.

Example A

1 x 8" and 1 x 4" = 12"

Therefore one 8" fusion and one 4" fusion could be done at the same time.

Example B

1 x 8" and 2 x 3" = 14"

Therefore one 8" fusion and two 3" fusions could not be done at the same time.

The Tables below show all multiple size fusions possible for each fusion range.

Group A: 1-1/2" – 2" Fusion Range

Pipe Size (in)	Multiple Size Joint Fusion Combinations					
	Option A	Option B	Option C	Option D	Option E	Option F
1-1/2"	6	5	4	3	2	1
2	1	2	3	3	4	5
Equivalent Total:	11	11.5	12	10.5	11	11.5

Group B: 3" – 12" Fusion Range

Pipe Size (in)	Multiple Size Joint Fusion Combinations						
	Option A	Option B	Option C	Option D	Option E	Option F	Option G
3	2	2	1	1	1		
4		1	2			1	1
6	1			1		1	
8					1		1
10							
12							
Equivalent Total:	12	10	11	9	11	10	12

In-Field Joining

The Encase system is manufactured in modular form from factory-assembled components. Minimal site fabrication is required and therefore site installation time is cut to a minimum. The only joining necessary is to fuse the primary and secondary pipe with Encase couplings. Both primary and secondary joints can be assembled in the trench, or above-ground local to the trench, depending on the site conditions. The general principles for fusing the primary and secondary Encase couplings to the Encase pipe is essentially the same as that described above – with some slight modifications in procedure. These are detailed in the following section.

Figure 6

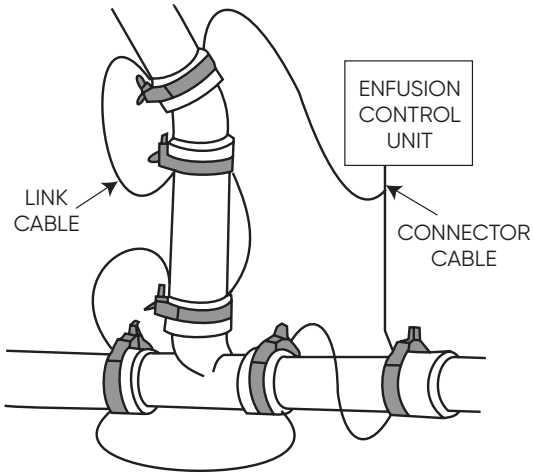

Primary Pipe Joining

Prior to commencing joining, ensure the trench has been correctly prepared to accept the Encase system. Suggested trench and bedding preparation details are shown in Section Eight of this manual under "Buried Pipe".

1. After preparing the trench, the Encase components should be placed in position with the pipe ends aligned for joining. Each pipe is labelled to facilitate correct alignment. Make sure there is at least 6" of clearance all around the pipe local to the joints to allow easy access.
2. It is essential that the anchor plate in the fittings is positioned so that the drainage and leak detection cable port is at the bottom of the pipe.

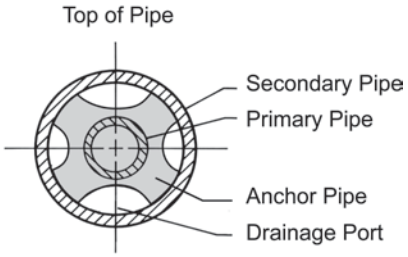

3. All fittings have four access ports to allow the fittings to be installed at the desired angle. Both pipe and fittings are supplied with twine to simplify installation of leak detection cable after primary joining. Make sure the twine is placed out of the way prior to commencing work.

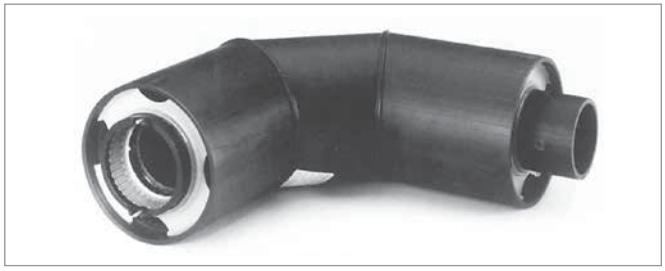

4. Lay the pipe on sandbags in the trench to facilitate setting the necessary fall on the pipe run to allow free drainage as dictated by the local codes. This also allows easy access for pipe joining.

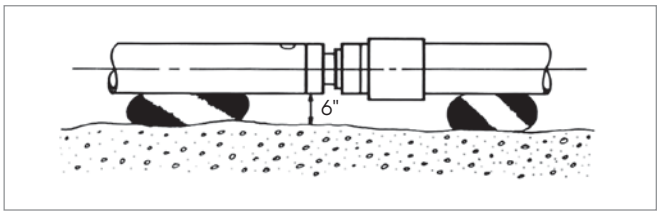

5. Alternatively, the trench bed may be completely covered with sand or pea gravel. In this case, the bedding material must be removed from underneath the secondary pipe to a depth of 6" and along a length of three feet either side of the joint centerline, to allow insertion and fusion of the secondary coupling.

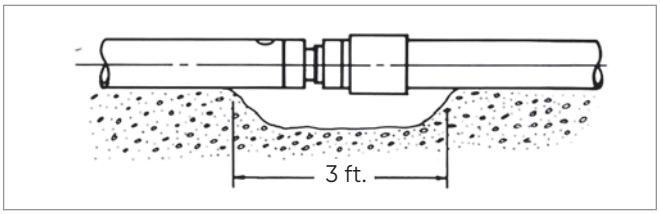

6. Clean off the outside surfaces of both the primary and secondary pipe sections, making sure that all moisture, mud and grit is removed and that the primary coupling is also clean.
7. Slide the secondary coupling over the one section of the pipe to be joined so that it is out of the way and does not interfere with the primary joining process.

8. Make sure the primary joint is properly aligned before fusion. We suggest a straight edge be placed across the gap (as shown) to ensure the joint is square before joining.

9.

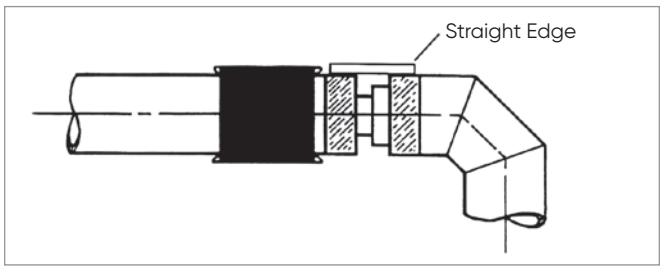

Prepare and fuse the primary pipe in the manner outlined on pages 11 and 12.

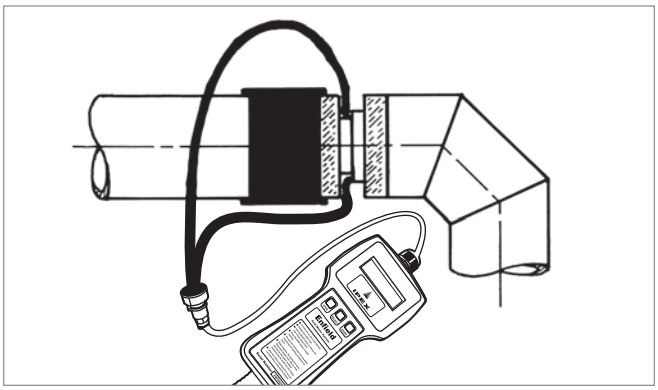

Secondary Pipe Joining

10. The ends of all fittings and pipe sections are marked with a white line to show where the secondary coupling should be positioned for joining. Make sure that all dirt, oil, water and grease is removed from the area between the pipe/fitting end and the white line, and then lightly abrade the pipe surfaces with a 60-grip emery cloth.

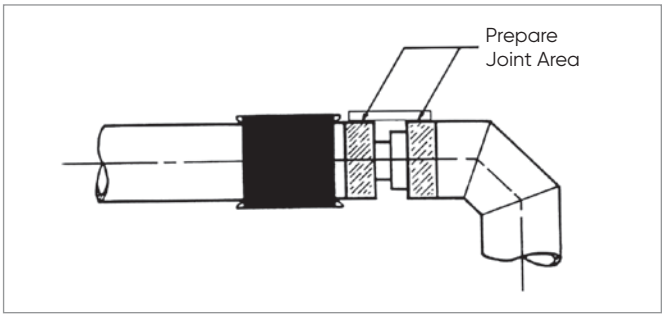

CAUTION: It is essential that the white lines are visible on either side of the coupling prior to commencing the joining operation.

Failure to position the secondary coupling centrally between the white lines may result in the fusion wires being out of contact with the secondary pipe. If this happens, the wire will overheat and a poor joint will result.

11. Slide the secondary coupling back over the joining area and onto the mating pipe/fitting. The coupling MUST be centrally located between the white lines of the mating components before fusing.

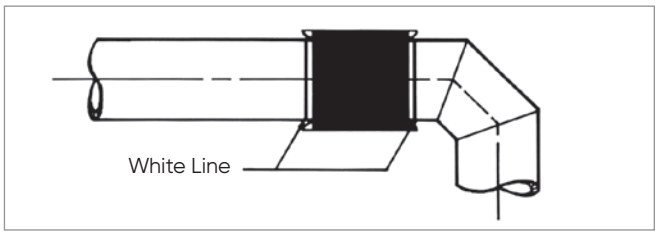

12. Place one secondary clamp on the outside edge of each end of the coupling and tighten. It is usually necessary to tighten by hand followed by three or four turns of a hand wrench to fully lock the secondary coupling into position. It is essential that, after tightening the clamp, the fit of the secondary coupling onto the pipe/fitting is checked. The coupling MUST NOT move. If it does, the clamp should be tightened further until the coupling is FIRMLY LOCKED onto the pipe/fitting.

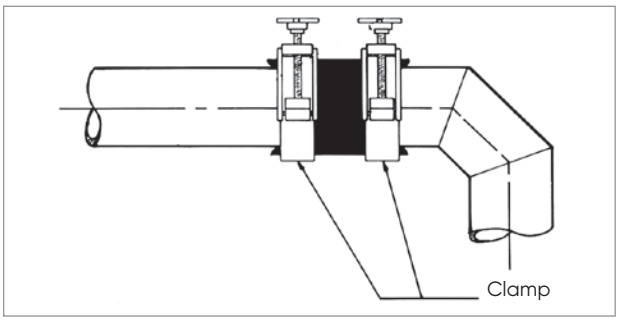

13. Connect the Enfusion lead to the secondary coupling and complete the Enfusion cycle as described previously in the 'Joining Procedure'.

14. Leave the joint undisturbed for 10 minutes, after which time the secondary clamps can be removed and the system pressure tested according to the procedures detailed under 'Testing' at the end of this section.

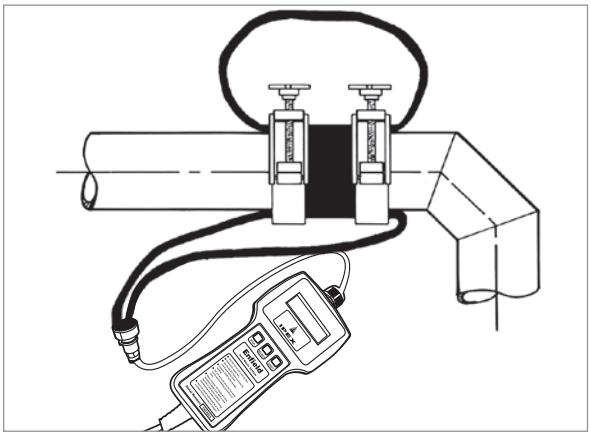

Testing Procedures

The purpose of a site pressure test is to establish that all joints have been correctly made. Encase allows for the individual testing of the primary and secondary piping.

Primary Pipe

Hydrostatic testing of the primary joint can be performed ten minutes after the final primary joint has been completed. The pressure testing procedure detailed below should be strictly followed.

1. Fully inspect the installed piping for evidence of mechanical abuse and suspect joints.
2. Split the system into convenient test sections, not exceeding 1,000 ft. The piping should be capped off with an expandable plug at the end of the pipe section to be tested.
3. Prior to starting the test, straight lengths of pipe should be backfilled between fittings that are tested.
4. Slowly fill the pipe section with cold water, taking care to evaluate all trapped air in the process. Use air release valves in any high spots in the system. Do not pressurize at this stage.
5. Leave the pipe for at least one hour to allow an equilibrium temperature to be achieved.
6. Visually check the system for leaks. If clear, check for, and remove any, remaining air from the system.
7. Pressurize the system to a suggested maximum of 10 feet head by means of a standard 10 foot standing water test using a 10 foot vertical riser, or a low-pressure hand pump.
8. Leave the line at 10 feet head for a period of up to eight hours, during which time the water level should not change (standing water test), nor should the pressure gauge reading change (hand pump test).
9. If there is a significant drop in pressure, or extended times are required to achieve the desired pressure, either joint leakage has occurred or air is still entrapped in the line. In this event, inspect for joint leaks. If none are found, check for entrapped air – this must be removed prior to continuing the test.
10. If joints are found to be leaking, the system must be fully drained and the joints repaired. Dry, or marginally fused Enfield joints can be re-fused by following steps 5 through 13 in the Standard Enfield Electrofusion Installation procedure. To remove moisture from the joint, use the drying cycle.
    - To dry the Enfield joint jusing the handheld Enfusion machine with software V1.17 or earlier, the drying cycle can be accessed by starting and stopping a regular fusion cycle within 2 seconds.
    - To dry the Enfield joint using the handheld Enfusion machine with software V1.19, users need to connect the leads and fittings. The machine will prompt the user to “PRESS START”. The user needs to press the “SELECT” button and then “START” button immediately after. The drying cycle will appear with a 45 second count down.
    - Allow the joint to cool.
    - Now re-fuse using the correct Enfusion machine settings for the size of pipe being joined following steps 5-13 of the Standard Enfield Electrofusion Installation procedure.
    - Should any of the re-welded fitting(s) fail the second hydro-test, the leaking joint(s) can be back-welded with a hot-air gun and welding rod. Should the back-welded joint(s) fail a third hydro-test, they will need to be cut out of the system and substituted with new fittings.
    - If a joint has be to cut out and replaced, the procedure for pipe modification detailed in this manual should be strictly followed.
11. Repeat the 10 feet head test after repairing any leaking joints, following the procedure described above.

Secondary Pipe – Hydrostatic Testing

1. After successfully completing the primary pipe 10 foot head test, the secondary pipe can be joined and tested. Do not drain the primary pipe. Simply leave the primary pipe at a 10 foot-head hydrostatic pressure to avoid any possibility of the primary pipe collapsing due to the external load from the secondary pipe test.
2. Fill the secondary pipe with cold water and repeat steps 5 to 11 in ‘Primary Pipe’ procedure..
3. After successfully completing the secondary pipe test, leave the primary pipe full of water and under pressure. Drain the secondary pipe and purge through with low pressure, dry (-100F dewpoint), air or nitrogen to purge out all moisture from the system.

Secondary Pipe – Air Testing

After successfully completing the primary pipe 10 foot head, hydrostatic pressure joint integrity test, the secondary pipe can be joined and tested.

Do not drain the primary pipe. Simply leave the primary pipe at a 10 foot-head hydrostatic pressure to avoid any possibility of the primary pipe collapsing due to the external load from the secondary pipe test.

For systems containing: cable leak detection, low points not easily drained, p- traps, or where it is not possible to dry out the interstitial space, it may be necessary to conduct a pneumatic joint integrity test; subject to the engineer and/or authority having jurisdiction. This alternative joint integrity test uses dry, low pressure air.

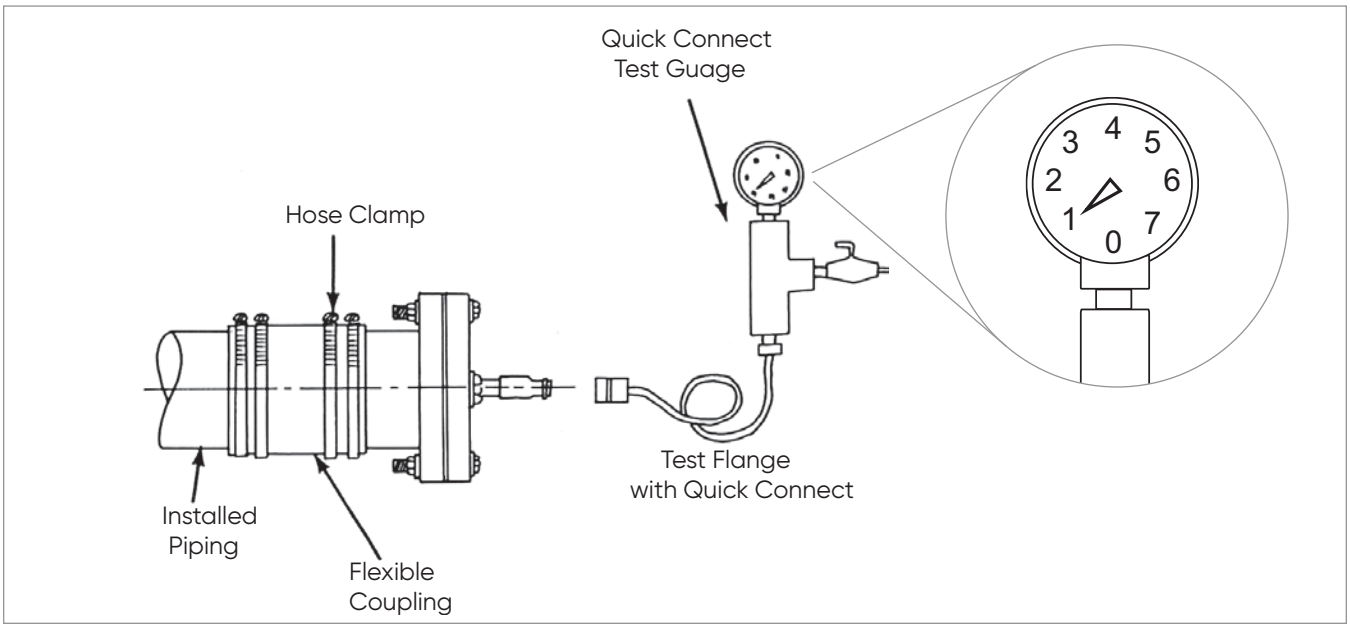

1. Leave the primary pipe at a 10-foot head hydrostatic pressure to avoid any possibility of the primary pipe collapsing due to external load from the secondary pipe test.
2. Slowly pressurize the secondary pipe with air to a MAXIMUM of 5 psi for 1 hour, using a similar test assembly as shown. To ensure that the pressure does not exceed 5 psi, the testing equipment should also include a pressure regulator or pressure relief valve (set at no higher than 5 psi) and pressure guage.
3. While taking great care not to impact or damage the secondary pipe, the exposed secondary joints should be wiped with an IPEX approved leak detector. In addition, check the pressure gauge to make sure that there is no pressure decay.
4 It is essential that the system is closely monitored and that the pipe suffers no impact or other damage during the test.

NOTE: For more information on lower pressure air testing of thermoplastic piping systems, reference Unibell B-6.

WARNING

Take special care to avoid causing impact to the piping when testing the interstitial space of rigid thermoplastic systems using compressed gases. Impact to the system during air testing can cause failure which may result in injury or death.

Conduct this test only when the ambient temperature is 50°F or above.

The secondary pipe should never be pressurized to any more than 5 psi when using air.

Encase™

Material Properties

Properties	Materials	
	Valve	Standards
Specific Gravity	0.94	D1505
Tensile Yield Strength @ 2"/Min.	4400 psi	D638
Flexural Modulus	215,000 psi	D790
Hardness, Rockwell R	100	D1706
Izod Impact, Notched	1.0 ft. lbs/in.	D256
Coefficient of Linear Expansion	6×10^{-5} in/in/F	D696
Heat Deflection Temperature @ 66 psi load	220 – 240°F	D648
Heat Deflection Temperature @ 264 psi load	195°F	D648
Water Absorption. 24 hrs.	0.01%	D570
Time of Burning (sec.)	< 5	D635
Extent of Burning (mm)	< 5	
Burning Class	V2	UL94
Maximum Smoke Density	62.0	D2843
Smoke Density Rating	40.1	
Oxygen Index %	28	D2863

About IPEX

About IPEX by Aliaxis

As leading suppliers of thermoplastic piping systems, IPEX by Aliaxis provides our customers with some of the world's largest and most comprehensive product lines. All IPEX by Aliaxis products are backed by more than 50 years of experience. With state-of-the-art manufacturing facilities and distribution centers across North America, we have established a reputation for product innovation, quality, end-user focus and performance.

Markets served by IPEX by Aliaxis products are:

- Electrical systems
- Telecommunications and utility piping systems
- PVC, CPVC, PP, ABS, PEX, FR-PVDF and PE pipe and fittings (1/4" to 48")
- Industrial process piping systems
- Municipal pressure and gravity piping systems
- Plumbing and mechanical piping systems
- PE Electrofusion systems for gas and water
- Industrial, plumbing and electrical cements
- Irrigation systems

Products manufactured by IPEX Inc.

Encase™, Enfield®, Floway™, Labline® and Neutratank® and Plenumline™ are trademarks of IPEX Branding Inc.

This literature is published in good faith and is believed to be reliable. However, it does not represent and/or warrant in any manner the information and suggestions contained in this brochure. Data presented is the result of laboratory tests and field experience.

A policy of ongoing product improvement is maintained. This may result in modifications of features and/or specifications without notice.

ipexna.com
Toll Free: 866 473-9462

IPEX by aliaxis