IPEX
BIM Brochure

IPEX
by aliaxis

IPEX BIM OFFERING & SUPPORT

In response to the evolution in the construction industry and customers' needs, IPEX developed its BIM/CAD site as a centralized location for our customers to access the information they need for designing and modeling plumbing systems with our products.

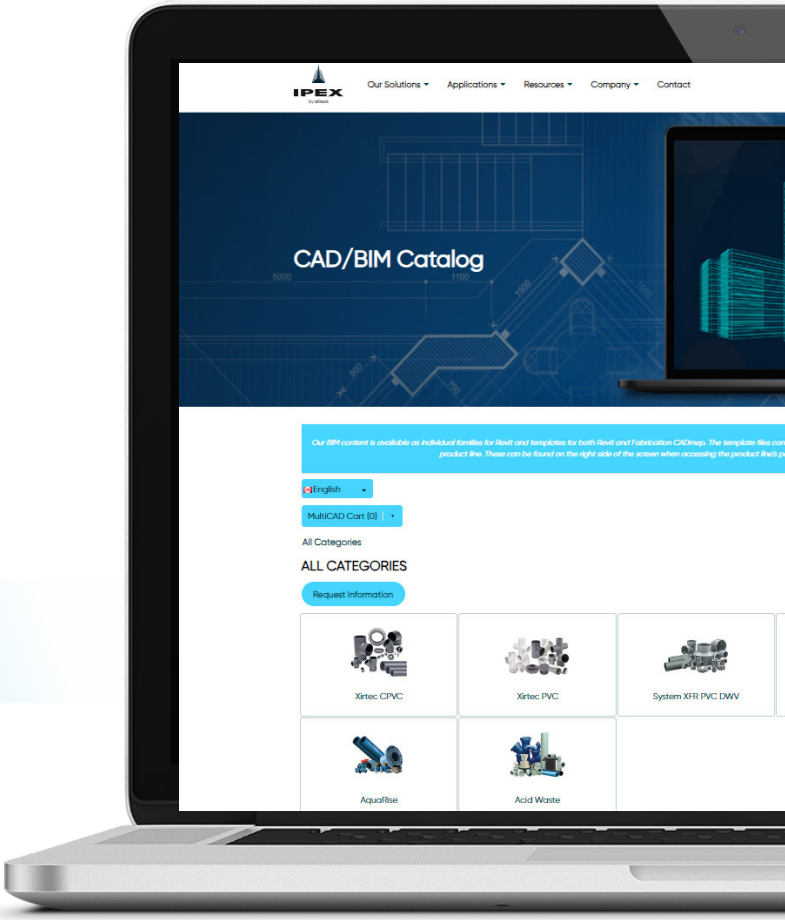

bim.ipexna.com

BIM PRODUCT PORTFOLIO

Xirtec® CPVC made with Corzan® CPVC *

Xirtec® PVC *

Xirtec PVC® Sch 80

Xirtec PVC® Sch 40

AquaRise®

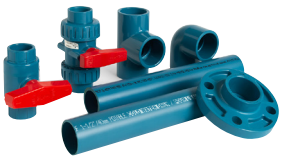

Acid Waste

Labline®

Plenumline™

Enfield™

System XFR®

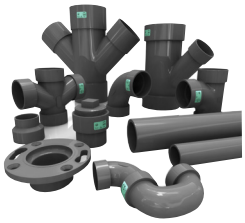

*Only molded fittings available at the moment
More new products are continuously added to our portfolio

CONTENT AVAILABLE

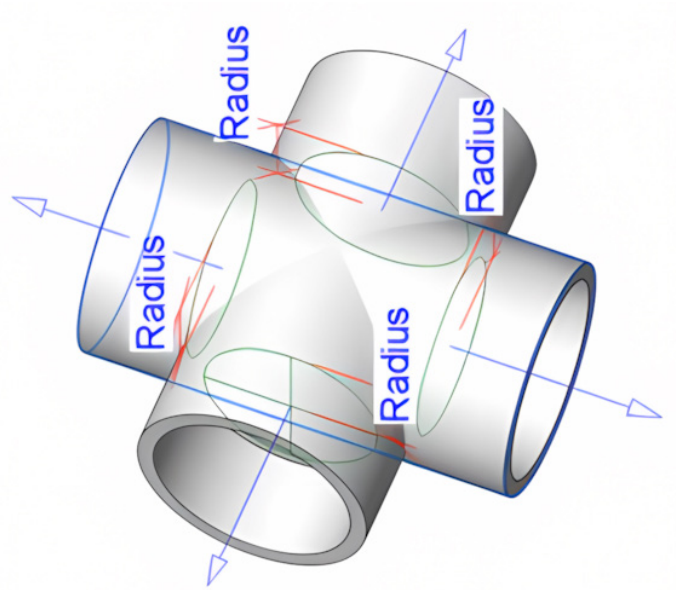

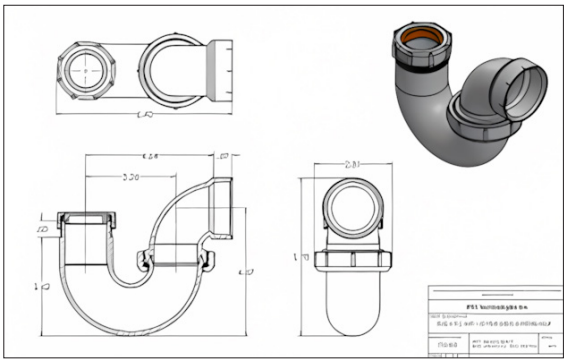

Dimensional Drawings

BIM Templates & Individual Objects Available For:

Revit®

Fabrication CADmep

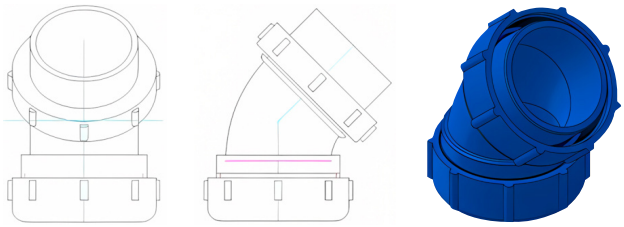

2D/3D CAD*

*Not available for DWV

IPEX BIM
BENEFITS

Precise physical representation with up-to-date dimensions

Valuable data embedded in each item such as: product codes, descriptions, standards, etc

Functional content and error free use

Wide spectrum of users served by having Dimesional Drawings, CAD and BIM content readily available

Personalized technical support and services from our Dedicated VDC team

SUPPORT & SERVICES

Specialized technical support from a dedicated VDC/BIM engineer

SUPPORT	• Assistance in the integration process of IPEX BIM content • Continuously revised and updated content to ensure it remains both current and reliable. • Consultation & Assistance with BIM Modelling for Plumbing applications
SERVICES	• Enhanced design assistance through our VDC expertise • On-demand creation of custom BIM content of our products • Assistance in converting from generic or other manufacturers' content to IPEX products.

If you have any question, please email us at BIMSupport@ipexna.com.

BUILD DIGITALLY FIRST

IPEX by aliaxis

ipexna.com

BRINNAIP250104UR