PE ELECTROFUSION SYSTEMS FOR GAS AND WATER CATALOG

ELECTROFUSION SYSTEMS

PE ELECTROFUSION SYSTEMS

For Gas and Water Applications

IPEX by aliaxis

Engineered Smarter™

IPEX PE ELECTROFUSION SYSTEMS FOR GAS AND WATER

The smarter, more reliable way of fusing HDPE pipe

The strongest, most reliable leak-proof seal in the industry

IPEX electrofusion products are engineered smarter than traditional fusion systems. Our couplings feature a unique, exposed coil design that provides a seal stronger than any other electrofusion system on the market. This is achieved for two reasons:

- The heat, created by the electrical current passing through the exposed coil of the IPEX coupling, is transferred directly to the PE pipe, and
- The coil protrudes from the interior surface of the coupling. When the pipe is heated, the coil sinks into it creating a much stronger bond.

As a result of this process, every joint will be sealed precisely to specification, automatically, every time, minimizing the risk of human error. This unparalleled sealing technology has earned our couplings the highest pressure rating in the industry. What's more, because every joint is as strong as the pipe itself, the IPEX Electrofusion system is ideal for horizontal direct drilling and other trenchless applications.

Industry-leading traceability

With the industry's most advanced barcode monitoring, recording and traceability technology, IPEX makes managing your infrastructure easier than ever before.

Imagine, no more hidden costs or surprises on future dig ups. Instead, you'll know when, where and how every coupling in your system was installed, and by whom.

All these benefits add up to deliver substantial time and cost savings on every project.

IPEX Electrofusion Systems. Smarter engineering for your water HDPE infrastructure.

TABLE OF CONTENTS

Genesis F3 Electrofusion Processor	05
Couplings	08
Clamps	14
Scraper Tools	17
Tapping Tees	20
Repair Clamps & Patches	26
Reducers	28
Saddles	29

As one of the world's leading manufacturer's of thermoplastic pipe, valves, fittings and related products for plumbing and mechanical applications, IPEX Inc. offers a comprehensive range of integrated solutions to meet the needs of engineers and contractors in commercial, institutional, industrial and residential construction.

How has Friatec earned the gas industry's seal of approval?

With a smarter engineered electrofusion system

As the leading North American specialist in the installation, repair and relining of polyethylene pipe for the gas industry, at Friatec we know PE joining better than anyone. So it's no surprise we've come up with a smarter engineered electrofusion system that produces the industry's strongest, most reliable joint seal.

"Exposed Coil" Design. Unlike competing embedded-coil technology, which has to heat the entire coupling, Friatec's unique "exposed coil" melts the coupling and pipe surfaces directly, sinking into the pipe to form a leakproof bond.

Extra Wide Fusion Zones. Friatec electrofusion couplings are designed with extra wide fusion zones that provide greater contact area, further increasing the integrity of the bond between coupling and pipe.
The result is the industry's highest pressure rated joint seal.

No Alignment Clamps. Friatec is also easier to use. In our state-of-the-art facilities, Friatec couplings are manufactured smarter to closer tolerances. Their high dimensional uniformity ensures a precise fit around the pipe, eliminating joint deflection during fusion and the need for expensive alignment clamps, commonly required with competing systems.

Exceeds Industry Standards. Friatec couplings are tested at 1.5 times the gas industry's maximum allowable operating pressure (MAOP) of 125 psi, meeting and even exceeding ASTM requirements.

The Friatec Electrofusion System™ – available through IPEX Friatec locations coast-to-coast.

Electrofusion Processor

- 120 Volt and 240 Volt
- Processor permanently mounted in a hard shell Pelican™ case
- USB download port
- Standard machine supplied with a barcode pen scanner.
- Options include SmartScan™ and SmartScan™ with GPS
- Can be operated in Manual, Barcode ID or Resistor ID modes
- Scanning capability for fitting traceability barcodes per ASTM F2897-11

Description	120 Volt Product Code	240 Volt Product Code
Processor w/ pen scanner	328221	328251
Processor w/ SmartScan	328222	328250
Processor w/ SmartScan + GPS	328223	328249
Processor w/ pen scanner w/ Bluetooth	328276	328280
Processor w/ SmartScan w/ Bluetooth	328277	328281
Processor w/ SmartScan w/ Bluetooth + GPS	328278	328282

Included Accessories:
Accessory bag | Genesis F3 Manual and Instructional Video | White Fittings Adapter 90° 4.0mm (x2) | Black Fittings Adapter 90° 4.7mm (x2) | Black Fittings Adapter 90° 4.7mm (w/Red ID pin) | Genesis F3 Information Card | 5/16" Adapter Wrench

ADVANTAGES

- Stores information on up to 1000 fusions
- Windows® 7 or later compatible
- Calibration Window 3 years
- Operator ID readable
- Barcode readable without leads attached
- Traceability barcode scanning capable
- AutoCal™ system allows processor to be recalibrated at Distributor's facility
- 3 handles so the processor can be carried easily by 1 or 2 people
- Cable storage in lid
- Lid opens 180 degrees
- Weight: 120 volt – 48 pounds, 240 volt – 57 pounds

Specifications

Parameter	120 Volt Version	240 Volt Version
Supply Voltage	97 VAC to 150 VAC	180 VAC to 264 VAC
Supply Frequency	47 Hz to 70 Hz	
Supply Waveform	Sine Wave or Square Wave	
Maximum Supply Current	30 Amps at 60 Amps Output (120 VAC)	25 Amps at 80 Amps Output (240 VAC)
Output Voltage	8 VAC to 48 VAC +/- 1.5%	
Output Current	4 AAC to 60 AAC +/- 1.5% (80 AAC @ 42 VAC output)	4 AAC to 80 AAC +/- 1.5%
Duty Cycle	60% (based on four 15 min. cycles, 9 min. ON and 6 min. OFF for 1 hour)	
Operating Temperature Range	0°F to 140°F	
Operating Modes	Barcode, Manual, Manual Barcode, Resistor ID	
Barcode Readability without Leads Attached	YES	
Output Cable Length	12 feet	
Input Cable Length	12 feet	
Fusion Information Storage	1000 Fusions	
Type A USB Port	USB A type connector for attaching a USB flash drive to download fusion data	
Type B USB Port	USB B type connector for attaching the AutoCal® field calibration system	
Bluetooth	Bluetooth replaces both USB A and USB B and uploads fusion data to the Cloud for easy access	
Languages	English/Spanish	
Fitting Adapters	90 degree non-rotating	
Environmental Protection	IP54 Splash-Proof	
Calibration Interval	3 Years	
Warranty	1 Year	
Scanning	Interchangeable Smart Scan/Smart Scan with GPS	
GPS	Optional	
Fitting Traceability	Code 128 A, B or C barcodes	
IEC Protection Class	Class 1 Grounded	
Calibration/Service	Field calibration capable	
Weight	48 pounds	56 pounds

This device is fully compatible with the AutoCal® field calibration system.

Genesis Accessories

Replacement Parts

Item	Part Number
Pen Scanner, Threaded Connector	328224
SMART Scanner, Genesis F3	328225
SMART Scanner with GPS, Genesis F3	328226
Display Shield	328230
Fitting Adapter, 4.0mm 90° (White)	328231
Fitting Adapter, 4.7mm 90° (Black)	328232
Fitting Adapter, 4.7mm 90° with ID pin	328233
Smart Scanner Holster	328227
Barcode Pen Holster	328228
Accessory bag	328229
Genesis F3 Information Card	328234
Fuse, 2 Amp 250 Volt Slow-Blow, 5 x 20mm	328235
Replacement Case	328247
Adapter Wrench 5/16"	328248
Universal Adapter, 4.0mm and 4.7mm adapter for Genesis F3 (1 Adapter)	328269

#328224

#328225 and # 328226

#328231

#328233 Fitting Adapter 90° with NO Pin, attaches to WHITE Cable Lead End

#328233 Fitting Adapter 90° with ID Pin, attaches to RED Cable Lead End

#328228

#328229

#328269

Friamat I & II Accessories

Item	Part Number
Marinco Adapter - Plug 30A. To 15A.	328000
Frialen Silver Pipe Markers	328002
* UPONOR/ New Style Central Connectors - (Pair) 4.7mm	328015
* Central Connectors - (Pair) 3.2mm	328016
Pen Scanner - Replacement	328063
* Aluminum Fusion Processor Carrying Case	328143
* Plastic Fusion Processor Carrying Case	291158
* Fusion Lead End 4.0mm (Pair)	328119

* For Friamat I & II Processors Only

#328015
for Friamat Processors

#328119
for Friamat Processors

Friatec 1/2" CTS through 30" IPS

Our Couplings and Fittings deliver flexibility and reliability, and meet various standards.

Short Designation	MBI/UBI ... OD
Field of Application	Connections of PE Pipes 2406/2708 and 3408/4710
Range of Application	Gas up to 125 psi Water up to 200 psi according to SDR of the Coupling

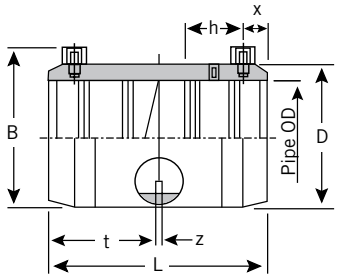

1/2" – 6"

see pg 5 for specific size applications

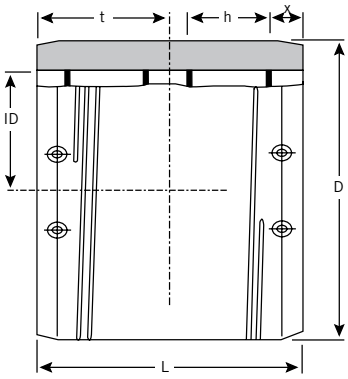

8" – 30"

Friatec CTS Couplings / Frialen

Nominal Pipe OD CTS	SDR	Product Code	ID min	ID max	D	B	L	t	z	h	x	Fusion Time/Sec @ 73°F	Cooling Time/Min */**/***
1/2"	11	128031	0.622	0.634	1.102	1.732	2.283	1.142	0.079	0.591	0.23	27	05/08/10
1"	11	128027	1.122	1.134	1.654	2.244	3.071	1.535	0.079	0.787	0.31	28	05/08/10

Friatec Couplings IPS

Nominal Pipe OD IPS	SDR	Product Code	ID min	ID max	D	B	L	t	z	h	x	Fusion Time/Sec @ 73°F	Cooling Time/Min */**/***
◗ 3/4"	11	128026	1.047	1.059	1.575	2.165	2.598	1.260	0.079	0.728	0.27	28	05/08/10
◗ 1"	11	128024	1.311	1.323	1.850	2.460	3.071	1.496	0.079	0.787	0.31	28	05/08/10
◗ 1-1/4"	11	128025	1.654	1.679	2.244	2.835	3.346	1.634	0.079	0.945	0.39	34	10/15/25
◗ 1-1/2"	11	128033	1.902	1.917	2.480	3.130	3.858	1.870	0.079	1.060	0.46	34	10/15/25
◗ 2"	11	128028	2.374	2.390	3.142	3.657	4.449	2.205	0.079	1.205	0.51	54	10/15/25
◗ 3"	11	128029	3.496	3.516	4.606	4.980	5.472	2.717	0.079	1.417	0.59	100	10/30/40
† 4"	11	128030	4.492	4.516	5.827	6.173	6.260	3.110	0.079	1.689	0.67	151	10/30/40
† 5"	11	128195	5.539	5.563	6.850	7.283	7.244	3.582	0.118	2.047	-	-	-
† 6"	11	128032	6.610	6.634	8.543	8.740	7.992	3.976	0.079	2.295	0.79	440	20/60/75
◗† 8" monofilar	11	128060	8.626	8.665	11.029	–	9.448	4.724	–	2.953	1.063	540	20/60/75
◗† 8" bifilar	11	128023	8.626	8.665	11.022	–	9.448	4.724	–	2.953	1.063	554 ea side	20/60/75
◗† 10"	11	128061	10.748	10.787	13.975	–	11.811	5.275	–	3.149	1.063	500 ea side	30/75/100
◗† 12"	11	128062	12.748	12.787	15.746	–	11.219	5.610	–	2.679	1.142	550 ea side	30/75/100
◗† 14"	11	128064	13.976	14.016	17.716	–	11.811	5.905	–	3.500	1.260	580 ea side	30/75/100
◗† 16"	11	128063	15.969	16.008	19.685	–	12.598	6.299	–	3.748	1.260	870/730 ea side	45/95/120
◗† 18"	11	128065	17.969	18.008	22.047	–	13.386	6.693	–	3.346	1.260	870/870 ea side	45/95/120
◗† 20"	11	128176	19.961	20.016	24.803	–	14.173	7.086	–	3.622	1.260	870/720 ea side	45/95/120
◗ 22"	17	128066	21.961	22.016	24.803	–	14.566	7.283	–	3.291	1.260	870/720 ea side	45/95/120
◗ 24"	13.5	128067	24.000	24.039	27.952	–	15.748	7.874	–	4.095	1.420	870/850 ea side	45/95/120
◗ 28"	17	128068	27.992	28.031	31.496	–	15.748	7.874	–	6.062	1.614	850/850 ea side	60/80/120
◗ 30"	11	228451	29.980	30.020	37.008	–	19.684	9.842	–	5.376	1.614	1680/1740 ea side	60/90/120
		Note: 240 Volt Genesis Unit or Equivalent required for fusion.											

FRIATEC Safety Fittings can be fused to all PE pipes SDR range 11 through 17.6.
*Pipe can be moved after indicated cooling time (handling)
**Pipe can be pressurized after indicated cooling time (pressure <90 psi)
***Pipe can be pressurized after indicated cooling time (pressure >90 psi)
†FM 200 psi, Short Designation: MBI...OD
◗ NSF approved

Friatec Couplings 6" through 24" DIPS

Short Designation	UBI ... OD
Field of Application	Connections of PE Pipes 2406/2708 and 3408/4710
Range of Application	Water up to 200 psi according to SDR of the Coupling

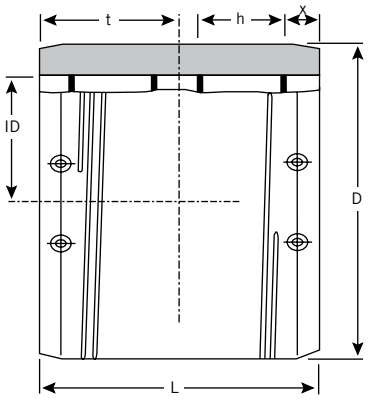

Nominal Pipe OD DIPS	SDR	Product Code	ID min	ID max	D	L	t	h	x	Fusion Time/Sec @ 73°F	Cooling Time/Min */**/***
6"	11	128134	6.889	6.929	8.825	8.268	4.134	2.535	0.827	486	20/60/75
8"	11	128131	9.039	9.078	11.022	9.448	4.724	2.953	0.827	540	30/75/100
10"	11	128136	11.082	11.122	13.976	11.023	5.511	3.291	0.827	550 ea side	30/75/100
12"	11	128132	13.182	13.224	15.746	11.023	5.511	2.582	0.827	550 ea side	30/75/100
14"	11	128158	15.272	15.311	18.000	11.417	5.708	3.500	0.827	730 ea side	40/95/120
16"	11	128135	17.385	17.444	22.047	11.417	5.708	3.392	0.827	870/720 ea side	40/95/120
18"	13.5	128138	19.472	19.531	22.047	11.417	5.708	3.392	0.827	870/720 ea side	40/95/120
20"	13.5	128133	21.582	21.641	24.803	11.417	5.708	2.460	0.827	870/720 ea side	40/95/120
24"	11	128207	25.732	25.791	32.000	16.535	8.268	4.764	0.827	870/1080 ea side	45/95/120

PLEASE NOTE 18" or 20" DIP are rated SDR 13.5

FRIATEC Safety Fittings can be fused to all PE pipes SDR range 11 through 17.6.

* Pipe can be moved after indicated cooling time (handling)
** Pipe can be pressurized after indicated cooling time (pressure <90 psi)
*** Pipe can be pressurized after indicated cooling time (pressure >90 psi)

Friastop EFV Couplings (Excess Flow Valve)

Friastop EF Couplings incorporate high quality Sentry GS EFV's made by Mertik-Maxitrol, one of the leading suppliers of EFV's in Europe. Gas Sentry EFV's are precisely adjusted at the factory, and can be applied universally for pressures as low as 2 psi and up to 125 psi.

The Sentry GS EFV design is largely resistant to most potential system contaminants and has been applied in many thousands of different installations over the last 20 years. This innovative design is equipped with a bypass flow feature that allows the valve to reset once the line pressure on the downstream side of the valve equalizes, eliminating the need for manual resets.

Gas Sentry EFV Components

1. Housing, inlet and outlet guide (brass)
2. Closing disc (aluminum)
3. Adjusting screw (brass)
4. Pressure spring (stainless steel)
5. O-Ring (NBR)
6. Guide pin (stainless steel)

Nominal and Trip Flows (at 10 psi)

The innovative Sentry GS· EFV design has one of the lowestpressure drops of any currently installed EFV- allowing the maximum protected length based on flow and pressure.

Each Friastop coupling has a particular Sentry GS EFV type factory installed. The table below shows the coupling nominal size as well as its associated EFV type.

Nominal Size	Part Number	Integrated EFV Type	Nominal Flow @ 10 psi (ft^3/hr)	Min Trip Flow @ 10 psi (ft^3/hr)
3/4" IPS	128237	GS20	677	779
1" CTS	128238	GS20	677	779
1" IPS	128239	GS25	1,100	1,299
1-1/4" IPS	128241	GS32	1,662	2,003
1" CTS x 1/2" CTS	128240	GS15	474	571
2" IPS	128257	GS50	4,794	5,554

FRIATEC Safety Fittings can be fused to all PE pipes SDR Range 11 through 17.6. Allow electrofusion joints to cool prior to handling, pressurizing or tapping.

3/4" IPS and 1" CTS Friatec Couplings incorporating GS20 EFVs

Line Pressure (psi)	Nominal Flow Rate (ft^3/h)	Minimum Trip Flow Rate (ft^3/h)	Maximum Protected Length 3/4" IPS SDR 11	Maximum Protected Length 1" CTS SDR 11.5 (ft)
2	556	641	350	497
5	604	696	927	1316
10	677	779	1806	2565
20	802	924	3432	4873
40	1007	1160	6555	9307
60	1177	1355	9694	13764
80	1325	1526	12892	18306
100	1458	1680	16155	22938
125	1610	1854	20318	28849

1" IPS Friatec Couplings Incorporating GS25 EFVs

Line Pressure (psi)	Nominal Flow Rate (ft^3/h)	Minimum Trip Flow Rate (ft^3/h)	Maximum Protected Length 1" CTS SDR 11 (ft)
2	927	1068	433
5	1007	1161	1115
10	1128	1299	2155
20	1337	1540	4076
40	1679	1933	7768
60	1962	2260	11478
80	2209	2544	15259
100	2430	2800	19115
125	2683	3090	24035

1-1/4" IPS Friatec Couplings Incorporating GS32 EFVs

Line Pressure (psi)	Nominal Flow Rate (ft^3/h)	Minimum Trip Flow Rate (ft^3/h)	Maximum Protected Length 1-1/4" IPS SDR 11 (ft)
2	1367	1647	634
5	1484	1789	1612
10	1662	2003	3101
20	1970	2374	5854
40	2441	2981	11142
60	2890	3483	16457
80	3255	3922	21872
100	3582	4316	27395
125	3954	4764	34442

1" CTS x 1/2" CTS Friatec Reducing Couplings Incorporating GS15 EFVs

Line Pressure (psi)	Nominal Flow Rate (ft^3/h)	Minimum Trip Flow Rate (ft^3/h)	Maximum Protected Length 1/2" CTS SDR 7 (ft)
2	408	470	23
5	443	510	61
10	496	571	119
20	588	677	225
50	831	924	533
100	1069	1231	1060
125	1080	1358	1333

2" IPS Friatec Couplings Incorporating GS50 EFVs

Line Pressure (psi)	Nominal Flow Rate (ft^3/h)	Minimum Trip Flow Rate (ft^3/h)	Maximum Protected Length (ft)
2	3941	4567	576
5	4281	4960	1502
10	4794	5554	2913
20	5862	6583	5520
40	7135	8266	10529
60	8338	9660	15564
80	9389	10876	20814
100	10326	11970	25927
125	11401	13210	32604

Alignment Clamps – IPS / DIP

Each alignment clamp listed in the table aligns only one size pipe. Select tool according to pipe size to be aligned.

Description – Single	Product Code
1-1/4" IPS	228244
2" IPS	228137
3" IPS	228248
4" IPS	228138
4" DIP	228263
6" IPS	228139
6" DIP	228264
8" IPS	228246

Description – Double	Product Code
1-1/4" IPS	228245
2" IPS	228140
3" IPS	228249
4" IPS	228141
6" IPS	228142
8" IPS	228247

Large Diameter Alignment Clamps

Description	Product Code
Single 8" - 18"	TBD
Double 8" - 18"	TBD

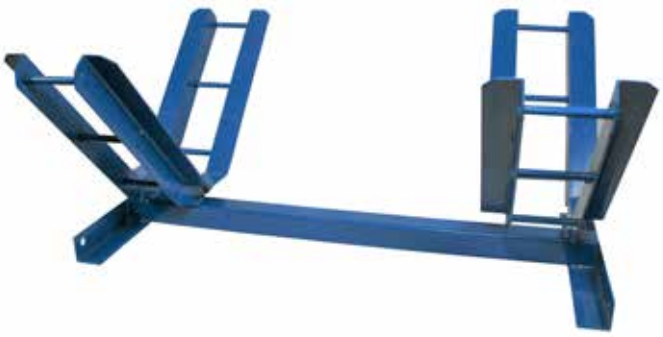

Hydraulic Re-Round Clamps – IPS / DIP (Special Order)

If the end of a PE pipe is not perfectly round, the coupling will not fit over the end of the pipe. Our Re-Round Clamps solve this problem.

The clamping unit is comprised of:

1 – Hydraulic clamping unit
2 – Component inserts

Description	IPS Product Code	DIP Product Code
8" DIP Re-Round Insert		228162
8" DIP Master Re-Round Insert		228151
12" DIP Master Re-Round Clamp		228153
12" DIP Re-Round Insert		228163
12" IPS Re-Round Insert	228157	
14" IPS Master Re-Round Clamp	228152	
16" DIP Master Re-Round Clamp		228155
16" DIP Re-Round Insert		228164
16" IPS Re-Round Insert	228158	
18" DIP Master Re-Round Clamp		228161
18" IPS Master Re-Round Clamp	228154	
20" IPS Master Re-Round Clamp	228161	
22" - 24" IPS d 630mm Large Master Re-Round Clamp,	228156	
22" IPS Re-Round Insert	228159	
24" IPS Re-Round Insert	228160	
28" IPS Master Re-Round Clamp	228217	

IPEX Re-Round Tools

Our three new, re-designed tools now cover from 10" IPS/DIP right up to 36" IPS/ DIP diameters. The tools are shipped in a durable crate and are lightweight and are easy to install.

- Made of tough coated steel and designed to withstand the rigors of jobsite installation.
- Light and easy to install
- Three tools cover a wide range of available diameters.
- Shipped in a durable crate for easy storage

Description	Product Code
10" IPS/DIP – 16" IPS/DIP	128258
18" IPS/DIP – 26" IPS/DIP	228359
28" IPS/DIP – 36" IPS/DIP	228338

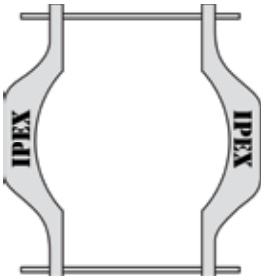

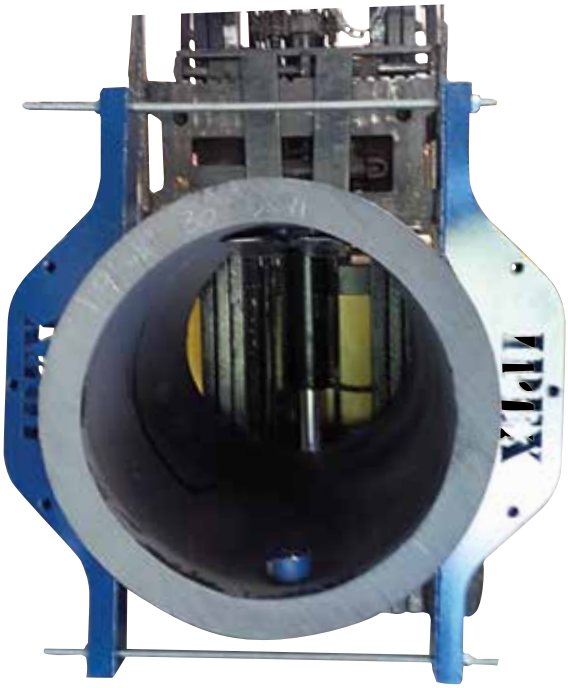

Scraper Tools

FRIALEN scraper tools are designed to assist the installer in producing a quality electrofusion joint every time.

The FWSG-SE Series of scraping tools are designed to mount on any part of the pipe, so it can be used to prepare the pipe surface for almost any type of electrofusion fitting: tapping tees, branch saddles or even couplings and elbows. With many utilities moving away from hand scraping, there has never been a better time to acquire a truly exceptional scraping tool.

FWSG-63
NEW Style

- Available from 2" – 12" sizes
- Easily mounts on any position on pipe using its 3/4 circumference open jaw with clamping lever.
- The 3/4 circumference reduces the excavation preparation required by other tools.
- Ultra-low drag compared to other tools, and a consistent swarf, minimum 0.008" thick is produced.
- Double sided blade allows easy field blade changes while extending life of scraper blade and lowering maintenance costs.

FWSG-400 / Range 3" IPS - 14" IPS

FWSG-710 / Range 6" IPS - 30" IPS

Scraper Tools	Product Code	Pipe Size Compatibility (inches)
FWZ Hand Scraper	328018	all
FWSG-63 NEW Style Scraper Tool w/ Case	128255	1/2" IPS – 2" IPS
FWSG-400 Scraper Tool	128259	3" IPS - 14" IPS
FWSG-710 Scraper Tool w/ Case	128190	6" IPS – 30" IPS, " DIP – 20" DIP

FWSG-SE Scraper Tools

Pipe Size (inches)	Product Code
2″	128223
3″	128222
4″	128217
6″	128218
8″	128219
12″	128220
*FWSG-SE Replacement Blade	128221

* This double-sided blade fits all SE tools

Scraper Tool Accessories

Accessories	Product Code
Spare Blades for FWZ Hand Scraper (set of 5 blades)	328017
Spare Blade Kit for FWSG 63 w/ 3 blades, 2 screws, 1 driver	128041
Spare Blade Kit for FWSG 315 w/ 3 blades, 2 screws, 1 driver	128040
Spare Blade Kit for FWSG 630/710 w/ 3 blades, 2 screws, 1 driver	128042
Aluminum Carrying Case for FWSG 630-710 Scraper Tool	128198

Accessories	Product Code
Aluminum Carrying Case for FWSG 63-315 Scraper Tool	128035
Spare Blade Kit for FWSG-SE	128221
Spare Blade Kit (FWSGE-15 for New Style FWSG 63 - double sided blade)	128256
Spare Blade Kit for FWSG-400	128260

DAA High Pressure Tapping Tees

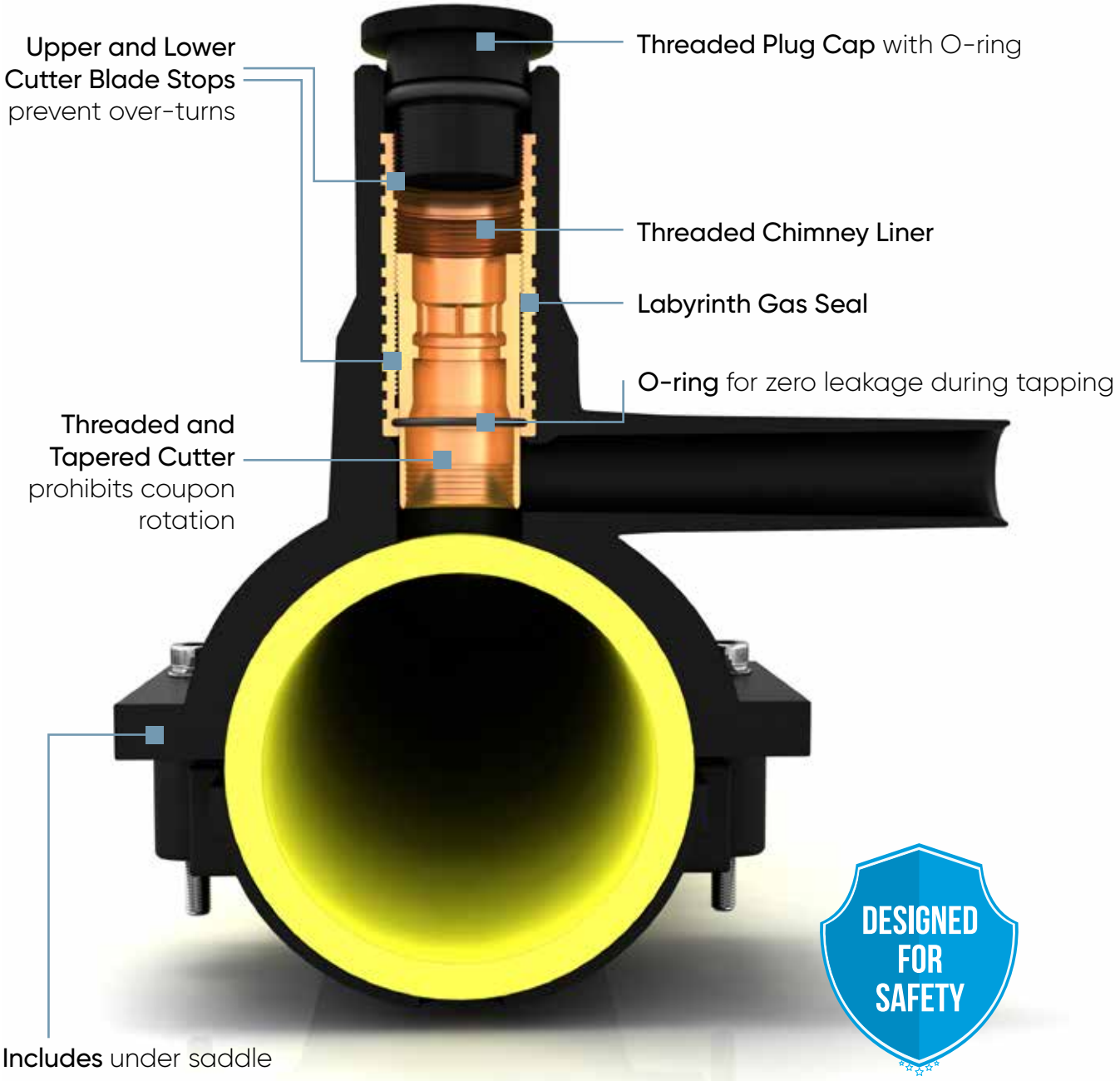

DAA High Pressure Tapping Tees – IPS

The industry-leading design of FRIALEN Tapping Tees makes for fast and safe installation of service and branch pipe.

Short Designation	DAA d1./ d2...
Field of Application	Installation of service and branch pipes to PE pipes 2406/2708 and 3408/4710
Range of Application	Gas up to 125 psi Water up to 200 psi

- Hot tapping tee designed for leakproof installation under pressure up to 200 psi for water
- Ease of assembly–no rounding clamps or special tools
- Cutter and sleeve made of brass
- Brass guide allows easy cutting of thick wall pipe
- Lower and upper "cutter stops" prevent overcutting as well as accidental removal of cutter
- Threaded plug with o-ring seal
- Corrosion-proof construction
- ASTM D2513
- NSF-61

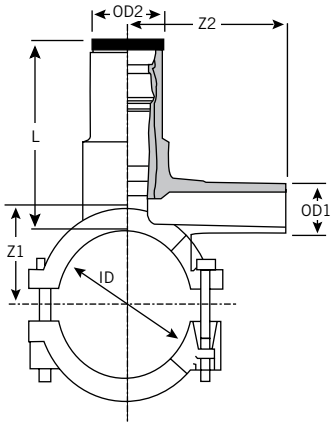

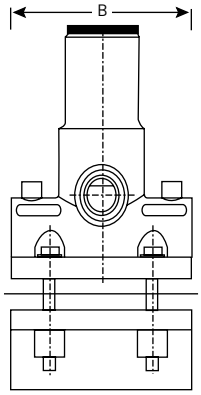

Total Elapsed Cooling Times

Nominal Size	Before Pressurizing via Outlet (minutes)	Before Tapping (minutes
1/2" CTS - 1" CTS		
3/4" IPS - 1" IPS		
1-1/4" IPS	15	20
1-1/2" IPS		
2" IPS	15	20
3" - 4" IPS & DIPS	20	30
6" IPS & DIPS	30	45
8" IPS & DIPS	50	60
10" - 14" IPS & DIPS	50	60
16" - 20" IPS & DIPS	50	60
22" - 28" IPS & DIPS		

DAA High Pressure Tapping Tees – IPS

Nominal Pipe OD IPS	Nominal Outlet	Product Code	ID	OD 1	OD 2	Cutter	L	Z1	Z2	B
2″	1/2″ CTS	228042	2.378	0.626	1.575	0.846	3.878	1.780	3.937	4.094
2″	3/4″ IPS	228029	2.378	1.051	1.575	0.846	3.878	1.780	3.701	4.094
2″	1″ CTS	228033	2.378	1.126	1.575	0.846	3.860	1.780	3.701	4.094
2″	1″ IPS	228032	2.378	1.315	1.575	0.846	3.860	1.780	3.701	4.094
2″	2″ IPS	228274	2.378	2.378	1.575	1.180	5.000	2.170	5.952	6.060
3″	1/2″ CTS	228043	3.504	0.626	1.969	1.180	4.764	2.343	4.410	4.803
3″	3/4″ IPS	228030	3.504	1.051	1.969	1.180	4.764	2.343	3.937	4.803
3″	1″ CTS	228031	3.504	1.126	1.969	1.180	4.764	2.343	4.255	4.803
3″	1″ IPS	228044	3.504	1.315	1.969	1.180	4.764	2.343	4.255	4.803
3″	2″ IPS	228028	3.504	2.378	1.969	1.180	4.780	2.350	6.890	5.905
4″	1/2″ CTS	228045	4.512	0.626	1.969	1.180	4.764	2.905	4.016	4.785
4″	3/4″ IPS	228034	4.512	1.051	1.969	1.180	4.764	2.846	4.409	4.764
4″	1″ CTS	228035	4.512	1.126	1.969	1.180	4.764	2.846	4.527	4.785
4″	1″ IPS	228046	4.512	1.315	1.969	1.180	4.764	2.913	4.527	4.785
4″	2″ IPS	228025	4.512	2.378	1.969	1.180	4.780	2.913	7.086	4.905
6″	1/2″ CTS	228047	6.638	0.626	1.969	1.180	6.575	4.500	4.586	7.677
6″	3/4″ IPS	228036	6.638	1.051	1.969	1.180	6.575	4.528	4.331	7.677
6″	1″ CTS	228038	6.638	1.126	1.969	1.180	6.575	4.528	4.331	7.677
6″	1″ IPS	228049	6.638	1.315	1.969	1.180	6.575	4.528	4.331	7.677
6″	2″ IPS	228027	6.638	2.378	1.969	1.180	6.575	4.803	6.811	7.677
8″	1/2″ CTS	228048	8.605	0.626	1.969	1.180	6.575	5.483	4.586	7.677
8″	3/4″ IPS	228037	8.605	1.051	1.969	1.180	6.575	5.315	4.331	7.677
8″	1″ CTS	228041	8.605	1.126	1.969	1.180	6.575	5.315	4.331	7.677
8″	1″ IPS	228040	8.605	1.315	1.969	1.180	6.575	5.315	4.331	7.677
8″	2″ IPS	228039	8.605	2.378	1.969	1.180	6.575	5.827	6.811	7.677
* 10″ – 16″	2″ IPS	228056	10.75 – 16.00	–	1.969	1.180	6.575	–	7.087	7.677
❖ 10″ – 16″	2″ IPS	128246	10.75 – 16.00	–	1.969	1.180	6.575	–	7.087	7.677

* Friatop pneumatic top-loading tool #228053 required

❖ Extended cutter 10″ x 16″ x 2″ DAA can make a full coupon cut on 16″ IPS SDR 11 Pipe

FRIATEC Safety Fittings can be fused to all PE pipes SDR Range 11 through 17.6.

Allow electrofusion joints to cool prior to handling, pressurizing or tapping.
For 12″ and 14″ IPS applications, maximum SDR for full coupon cut is SDR 11.
For 16″ IPS applications, maximum SDR for full coupon cut is SDR 13.5.
For 12″ DIP applications, maximum SDR for full coupon cut is SDR 11.
For 14″ and 16″ DIP applications, maximum SDR for full coupon cut is SDR 17.

DAA High Pressure Tapping Tees – DIP

The DAA is easy to assemble and delivers a high quality design for the water industry.

Short Designation	DAA d1./ d2...
Field of Application	Installation of service and branch pipes to PE 2406/2708 and 3408/4710
Range of Application	Water up to 200 psi

- Hot tapping tee designed for leak-proof installation under pressure up to 200 psi for water
- Ease of assembly–no rounding clamps or special tools
- Cutter and sleeve made of brass
- Brass guide allows easy cutting of thick wall pipe
- Lower and upper "cutter stops" prevent over-cutting as well as accidental removal of cutter
- Threaded plug with o-ring seal
- Corrosion-proof construction
- NSF-61

Nominal Pipe OD DIP	Nominal Outlet (in)	Product Code	ID	OD 1	OD 2	Cutter	L	Z1	Z2	B
4"	1/2" CTS	228251	4.512	0.626	1.969	1.201	4.764	2.905	4.016	4.785
4"	3/4" IPS	228252	4.512	1.051	1.969	1.201	4.764	2.846	4.409	4.764
4"	1" CTS	228250	4.512	1.126	1.969	1.201	4.764	2.846	4.527	4.785
4"	2" IPS	228253	4.512	2.378	1.969	1.201	4.780	2.913	7.086	4.905
6"	1/2" CTS	228254	6.638	0.626	1.969	1.201	6.575	4.500	4.586	7.677
6"	3/4" IPS	228255	6.638	1.051	1.969	1.201	6.575	4.528	4.331	7.677
6"	1" CTS	228256	6.638	1.126	1.969	1.201	6.575	4.528	4.331	7.677
6"	2" IPS	228257	6.638	2.378	1.969	1.201	6.575	4.803	6.811	7.677
8"	1/2" CTS	228258	8.605	0.626	1.969	1.201	6.575	5.483	4.586	7.677
8"	3/4" IPS	228259	8.605	1.051	1.969	1.201	6.575	5.315	4.331	7.677
8"	1" CTS	228260	8.605	1.126	1.969	1.201	6.575	5.315	4.331	7.677
8"	2" IPS	228261	8.605	2.378	1.969	1.201	6.575	5.827	6.811	7.677
10" – 16" *	2" IPS	228056	10.75 – 16.00	–	1.969	1.180	6.575	–	7.087	7.677

FRIATEC Safety Fittings can be fused to all PE pipes SDR Range 11 through 17.6.
Allow electrofusion joints to cool prior to handling, pressurizing or tapping.

Allow electrofusion joints to cool prior to handling, pressurizing or tapping.
For 12" and 14" IPS applications, maximum SDR for full coupon cut is SDR 11.
For 16" IPS applications, maximum SDR for full coupon cut is SDR 13.5.
For 12" DIP applications, maximum SDR for full coupon cut is SDR 11.
For 14" and 16" DIP applications, maximum SDR for full coupon cut is SDR 17.

DAA Tapping Tee Accessories

Description	Product Code
10mm Hex Wrench for 1-1/4" Main DAA Tees	228050
17 mm Hex Wrench for 2" x 1/2" - 1" IPS & CTS outlet sizes	228051
19mm Hex Wrench for 2" x 2" and 3" – 16" Main DAA Tees	228052
Friatop Pneumatic Top Loading Tool for 10" – 16" DAA-TL and all TL fittings	228053
Pressure Test Cap Adapter (optional) for DAA style 1-1/4" Tees	228024
Pressure Test Cap Adapter (optional) for DAA style 2" – 16" Tees	228055
1 -1/4" Replacement Plug Cap with O-ring	228332
2" Replacement Plug Cap with O-ring DAA TT with the following outlet sizes: 1/2" CTS, 3/4" IPS, 1" CTS and 1" IPS	228333
2" x 2" - 16" Replacement Plug Cap with O-ring	228334

When Time is Critical and Training is a Must, IPEX Stands Ready with Live Interactive On-Line Training Classes

Interactive Training

EFS Tapping Tees for Gas and Non Potable Applications

IPEX EFS Tapping Tees make for fast and safe installation of service and branch pipe.

Material Class	PE4710
Field of Application	Installation of service and branch pipes to PE pipes 2406/2708 and 3408/4710
Range of Application	Gas up to 125 psi

- Corrosion-proof construction for long service life
- Leak-proof seals based on hot tapping tee construction
- Easy installation using conventional tooling (no special saddling tools required)
- Best after-market service in the industry with an established North American manufacturer
- Compatible with all Universal Electrofusion Processors

1-1/4" and 2" main sizes plastic under saddle
3"-8" main sizes nylon strap undersaddle.

F1055

Host Pipe	Branch	Part No.
1-1/4" IPS	1/2" CTS	528000
1-1/4" IPS	3/4" IPS	528001
1-1/4" IPS	1" CTS	528002
1-1/4" IPS	1" IPS	528003
2" IPS	1/2" CTS	528004
2" IPS	3/4" IPS	528005
2" IPS	1" CTS	528006
2" IPS	1" IPS	528007
2" IPS	1-1/4" IPS	528009
3" IPS	1/2" CTS	528011
3" IPS	3/4" IPS	528012
3" IPS	1" CTS	528013
3" IPS	1-1/4" CTS	528015
3" IPS	1-1/4" IPS	528016
4" IPS	1/2" CTS	528018
4" IPS	3/4" IPS	528019

Host Pipe	Branch	Part No.
4" IPS	1" CTS	528020
4" IPS	1" IPS	528021
4" IPS	1-1/4" CTS	528022
4" IPS	1-1/4" IPS	528023
6" IPS	1/2" CTS	528025
6" IPS	3/4" IPS	528026
6" IPS	1" CTS	528027
6" IPS	1" IPS	528028
6" IPS	1-1/4" CTS	528029
6" IPS	1-1/4" IPS	528030
8" IPS	1/2" CTS	528032
8" IPS	3/4" IPS	528033
8" IPS	1" CTS	528034
8" IPS	1" IPS	528041
8" IPS	1-1/4" CTS	528035
8" IPS	1-1/4" IPS	528036

Requires EFS Tapping Tool
Allow electrofusion joints to cool prior to handling, pressurizing or tapping.
FRIATEC Safety Fittings can be fused to all PE pipes SDR Range 11 through 17.6.

EFS Accessories

Description	Part No.
Low Volume Pressure Test Cap (Outlet sizes 1/2" to 1")	528039
Medium Volume Pressure Test Cap (Outlet sizes 1- 1/4")	528040
Tapping Tool	528038

images?
Aluminum

IPEX Mobile Factory Training

Let US Go The Distance

The Friatec Electrofusion System™ is a smarter way to fuse HDPE pipe. It gives you the industry's strongest, most reliable seal, plus, it lets you automatically create and archive all the electronic documentation you need to track, trace and manage every coupling you or your contractors put in the ground.

For Pipe Repairs up to 22"

Field of Application	Repair of small damage leakage. Repair of areas with surface damage that are compatible with PE 2406/2708 pipes as well as PE 3408/4710 pipes.
Range of Application	Gas up to 125 psi, Water up to 200 psi

If a pipe is damaged, FRIATEC Repair Patches and Clamps are the quick reliable way to make the repair.

FRIATEC pipe repair systems are both simple to use and effective for pipe repair up to 22". Our repair systems make use of existing FRIATEC technology to seal a pipe puncture.

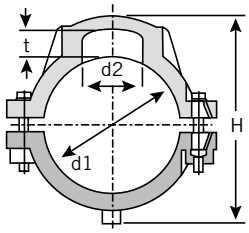

Repair Clamps – Under Saddle

Nominal Pipe	Main Size	Product Code	d1	d2	H	t	Cold Zone Width (Center)*
3"	IPS	228175	3.500	1.969	5.827	0.827	2.953"/75mm
4"	IPS	228176	4.500	1.969	6.614	0.827	3.071"/78mm
4"	DIP	228295	4.500	1.969	6.614	0.827	3.071"/78mm
6"	IPS	228177	6.625	1.969	8.583	0.827	3.346"/85mm

* Largest area of pipe damage this fitting is capable of sealing

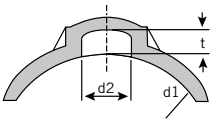

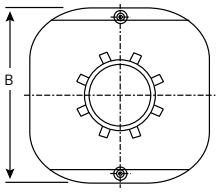

Repair Patches – Top Loading

Nominal Pipe	Main Size	Product Code	d1	d2	t	B	Cold Zone Width (Center)
8"	IPS *	228178	8.625	1.969	0.827	10.157	3.268"/85mm
10" – 22" 10" – 20"	IPS * DIP *	228179	10.750 – 28.000 11.100 – 21.600	1.969	0.787	7.874	3.307"/83mm

* FRIATEC Pneumatic Top-loading tool required (restriction on 28")

Accessories

Description	Product Code
Friatop Pneumatic Top Loading Tool	228053
12mm PE Repair Plug	228133
18mm PE Repair Plug	228134
24mm PE Repair Plug	228135
44mm PE Repair Plug	228136
Replacement bladder for Friatop	228148
VSC Adapter for Friatop Pneumatic Top Loading Tool	228223

Friatop Pneumatic Top Loading Tool

Note: For 10" -16" DAA-TL Tees & all TL Fittings

FRIATEC Safety Fittings can be fused to all PE pipes SDR Range 11 through 17.6.

Reducer CTS x CTS & IPS x CTS

Field of Application	Connections of PE Pipes 2406/2708 and 3408/4710
Range of Application	Gas up to 125 psi Water up to 200 psi

- Increased coupler depth (no holding clamps required)
- Extra wide fusion zones
- Increased wall thickness providing maximum stability
- Front and middle cold zones
- Exposed heating coil with direct contact to pipe
- Contacts are safe to touch
- Visual fusion indicator
- Batch marking
- Individually wrapped
- NSF – 61

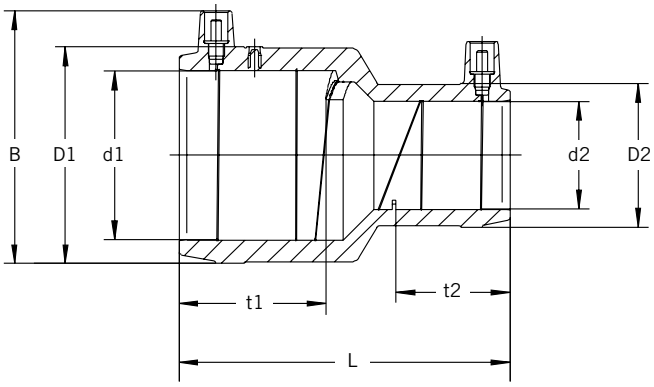

Nominal Pipe d1 (in)	Main Size d2 (in)	SDR	Product Code	D1 (in)	D2 (in)	B (in)	L (in)	t1 (in)	t2 (in)	Weight lbs/ea
1 CTS	1/2 CTS	11	128203	1.661	1.110	2.289	3.465	1.516	1.181	0.112
1 IPS	1/2 CTS	11	128204	1.858	1.110	2.482	3.465	1.516	1.181	0.122
2 IPS	1 CTS	11	128205	3.118	1.661	3.652	4.921	2.165	1.535	0.382

FRIATEC Safety Fittings can be fused to all PE pipes SDR Range 11 through 17.6.

SA Branch Saddles

Field of Application	Installation of service and branch pipes to PE pipes 2406/2708 and 3408/4710
Range of Application	Gas up to 125 psi (based on SDR of outlet) Water up to 200 psi

SA Branch Saddles are available with either a 2", 3" or 4" outlet

Benefits include:

- NSF-61

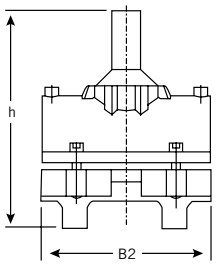

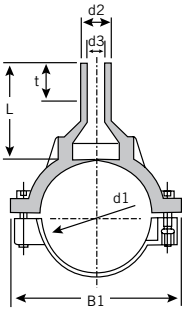

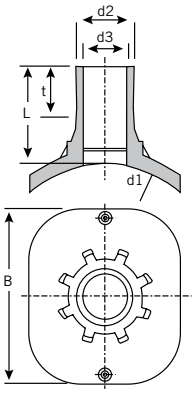

Nominal Pipe d1 (in)	Main Size d2	Nominal Outlet	Product Code	d3	L	h	t	B1	B2
* 3"	IPS	2 IPS	228184	1.969	4.055	8.150	2.756	6.102	5.906
* 4"	IPS	2 IPS	228185	1.929	4.291	9.173	2.205	6.890	7.087
* 4"	DIP	2 IPS	228296	1.929	4.291	9.173	2.205	6.890	7.087
* 6"	IPS	3 IPS	228180	2.717	5.079	11.496	3.937	8.543	9.646
* 6"	IPS	4 IPS	228277	3.543	5.512	12.256	4.291	9.055	10.433
* 8"	IPS	4 IPS	228276	3.543	5.512	14.256	4.370	11.220	11.024
*† 10" – 20" *† 10" – 22"	DIP IPS	2 IPS	228182	2.402	4.567	–	3.150	–	7.874
*† 10" – 20" *† 10" – 22"	DIP IPS	3 IPS	228187	2.402	4.567	–	3.150	–	7.874

* FRIATEC Pneumatic Top-loading tool required
† Comes with undersaddle

The saddle of the FRIATEC Safety Fittings can be fused to all PE pipes SDR range 11 through 17.6.
The end of the outlet can be electrofused to all PE pipes SDR range 11 through 17.6.
PE pipes of different melt index groups can be joined.

SPA Electrofusion Shut Off Saddles

Field of Application	Specially designed saddle that can be used with commercial shut off equipment on PE 2406/2708 and PE 3408/4710 pipes.
Range of Application	Gas up to 125 psi, Water up to 200 psi These ratings refer to the fitting only. Refer to the manufacturer of the shut-off equipment for the operational parameters allowed when stopping water flow.

FRIALEN SPA Shut Off Saddles are simply the best option for areas where temporary shut off equipment may be used. In addition, they provide a potential access point for inspection equipment. They are very compact with a robust design that incorporates a heavy externally threaded brass cap that ensures a safe connection with shut off equipment. The branch is also threaded internally and comes equipped with a heavy brass threaded plug that can be sealed for protection with a cap if necessary.

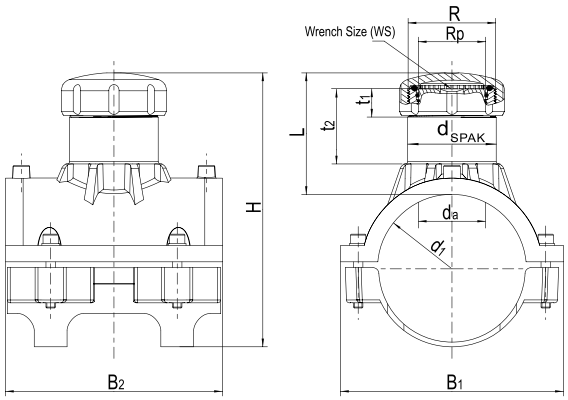

d_1	R	Rp	Part Number	BX	PU	L	t_1	t_2	d_{SPAK} (mm)	H	B_1	B_2	WS (mm)	Drilling ø d_a	Weight kg/each
3 IPS	G 2-1/2"	G 2"	228363	16	128	4.094	0.945	2.520	75	7.712	6.142	5.906	19	2.224	1.380
4 IPS	G 2-1/2"	G 2"	228361	12	96	4.094	0.945	2.520	75	8.752	7.008	7.086	19	2.224	1.540
6 IPS	G 2-1/2"	G 2"	228362	8	64	4.094	0.945	2.520	75	10.846	9.055		19	2.224	1.860
8 IPS	G 2-1/2"	G 2"	228335	5	40	4.094	0.945	2.520	75	12.835	10.157	7.598	19	2.224	1.900
* 10 – 12 IPS	G 2-1/2"	G 2"	228360	18	144	4.094	0.945	2.520	75	–	7.914	7.874	19	2.224	1.200

* Top-Loading version

Accessories for SPA Saddles

Description	Product Code
Electrofusion cap for SPA Saddles - Yellow	228242
Electrofusion cap for SPA Saddles - Black- fusible	228339

FRIATEC Safety Fittings can be fused to all PE pipes SDR Range 11 through 17.6.

VA Electrofusion Service Saddles SSPT*

Field of Application — Installation of service and branch pipes

Range of Application — Gas up to 125 psi, Water up to 200 psi

Friatec Molded Saddle Fittings may be clamped onto pipes up to SDR 11 and sealed using electrofusion.

Benefits include:

- Universal compatibility with various diameters of polyethylene pipe from 3" up to 22" IPS
- Quick, easy and safe assembly
- NSF-61

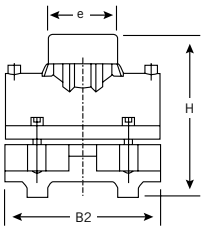

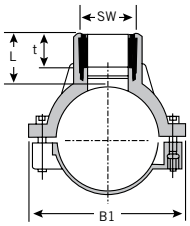

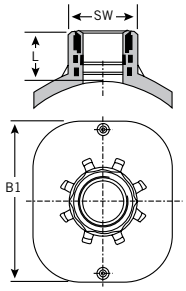

Nominal Pipe d1 (in)	Main Size d2	Nominal SSPT Outlet	Product Code	B1	B2	H	L	t	e
3"	IPS	2"	228262	6.102	5.906	7.835	3.740	1.063	3.189
4"	IPS	2"	228170	6.890	7.087	8.228	3.740	1.063	3.189
4"	DIP	2"	228298	6.890	7.087	8.228	3.740	1.063	3.189
6"	IPS	2"	228171	8.858	7.677	10.197	3.740	1.063	3.189
6"	DIP	2"	228302	8.858	7.677	10.197	3.740	1.063	3.189
8" - TL*	IPS	2"	228218	9.843	7.677	11.693	3.740	1.063	3.189
8" - TL*	DIP	2"	228173	10.039	7.677	12.283	3.740	1.063	3.189
10" – 22" TL* 10" – 20" TL*	IPS DIP	2"	228174	7.874	–	–	3.543	–	–

* FRIATEC Pneumatic Top-loading tool required
* SSPT - Straight Standard Pipe Thread

SSPT* Brass Reducer Bushings for use with VA Saddles

Description	Product Code
2" x 3/4" Male SSPT x Female NPT	228453
2" x 1" Male SSPT x Female NPT	228454
2" x 1 1/2" Male SSPT x Female NPT	228455

Note: Due to disimilar thread patterns, it is recommended to use this bushing with a VA Saddle to avoid weeping at the thread.

FRIATEC Safety fittings can be fused to all PE pipes SDR range 11 through 17.6.
Assemble nipple, bushing or corporation stop into saddle using red LOCTITE #262
* (SSPT) = Straight Standard Pipe Thread. Recommend use of brass bushing to avoid weeping at thread

SALES AND CUSTOMER SERVICE

IPEX USA LLC.
Toll free: (800) 463-9572

ipexna.com

About IPEX by Aliaxis

As leading suppliers of thermoplastic piping systems, IPEX by Aliaxis provides our customers with some of the world's largest and most comprehensive product lines. All IPEX by Aliaxis products are backed by more than 50 years of experience. With state-of-the-art manufacturing facilities and distribution centers across North America, we have earned a reputation for product innovation, quality, end-user focus and performance.

Markets served by IPEX by Aliaxis products are:

- Electrical systems
- Telecommunications and utility piping systems
- Industrial process piping systems
- Municipal pressure and gravity piping systems
- Plumbing and mechanical piping systems
- Electrofusion systems for gas and water
- Industrial, plumbing and electrical cements
- Irrigation systems
- PVC, CPVC, PP, PVDF, PE, ABS, and PEX pipe and fittings

FRIATEC products are distributed in the United States by IPEX USA LLC.
FRIATEC is a registered trademark of Aliaxis.

This literature is published in good faith and is believed to be reliable. However, it does not represent and/or warrant in any manner the information and suggestions contained in this brochure. Data presented is the result of laboratory tests and field experience.

A policy of ongoing product improvement is maintained. This may result in modifications of features and/or specifications without notice.

IPEX by aliaxis

CTMNPFIP210605UR
© 2023 IPEX MN004U