LABLINE®

Find us in MasterSpec® a product of The American Institute of Architects

Our products are specified in BSD SpecLink www.bsdspeclink.com

Submittal Data Sheet

Job or Customer: .....

Engineer: .....

Contractor: .....

Submitted by: ..... Date

Approved by: ..... Date

Order No: ..... Date

Specification: .....

Installed Date: .....

< STANDARDS >

ASTM F1412
ASTM D 4101
ASTM D 635

NSF 14

File No: 1103, 3455

CSA B181.3

IPEX's Labline® mechanical-joint system is the preferred solution for virtually all non return air plenum chemical waste applications. Pipe and fittings are made from a green flame retardant Polypropylene (FRPP). Labline® pipe and fittings comply with ASTM F1412 and CSA B181.3 Standards for Polyolefin pipe and fittings for corrosive waste drainage systems. Material used in the manufacturing of Labline® pipe and fittings complies with the material requirements of ASTM D4101. Standard Specification for polypropylene for Injection and Extrusion materials. All pipe and fittings are listed to NSF 14 standard and IAPMO.

pipe and fitting availability

1 1/2" – 12" Pipe (10' or 20' FRPP or NFRPP, Sch. 40 or Sch. 80)	1 1/2" – 12" 45 Deg Wye and Reducing WYES FRPP
1 1/2" – 4" Couplings And Reducer Couplings FRPP	11/2" – 4" Double Wye, Reducing Double Wye FRPP
1 1/2" – 4" 1/4 Bend, Loose Nut 1/4 Bend FRPP	1 1/2" x 1 1/4" Threaded Adapter 1 1/2" x 1 1/2" FRPP
1 1/2" – 4" Cleanout Plug FRPP	1 1/2" – 4" Caps FRPP
1 1/2" Tailpiece Adaptor, (3" & 12" Lengths) FRPP	1 1/2" – 2" "U" Bend, "S" Trap, Running Trap FRPP
1/2" – 4" 1/8 Bend , Loose Nut 1/8 Bend FRPP	1 1/2" – 4" 'P' Trap, Long Radius 'P' Trap FRPP
Sink Outlet With Plug	1 1/2" – 4" Male Adaptor FRPP
Cup Sink Round / Oval	1 1/2" – 2" Female Adaptor FRPP
1 1/2" – 4" Sanitary Tees, Reducing Sanitary Tees, Clean Out Tees FRPP	1 1/2" – 4" Grooving Tool And Spanner Combinations (Also Sold Seperately)
1 1/2" – 4" Glass Adaptor, No Hub Adapter FRPP	1 1/2" Universal Traps (Various) "S" Type Universal Traps (Various), Dilution Traps FRPP
1 1/2" – 4" Combo Wyes And Reducing Combo Wyes FRPP	11/2" – 4" Double Wye & 1/8 Bend, Reducing Double Wye & 1/8 Bend

ADDITIONAL CORROSIVE WASTE PRODUCTS

FLOWAY™ ACID RESISTANT FLOOR DRAINS

NEUTRATANK® NEUTRALIZATION TANKS

NEUTRASYSTEM2™ MONITORING, RECORDING & ALARM SYSTEMS

PLENUMLINE™ FR-PVDF MECHANICAL JOINT ACID WASTE SYSTEM

ENFIELD™ ELECTROFUSION ACID WASTE SYSTEM

Encase™ PP Double Containment System

ipexna.com
Toll Free: 800 463-9572

IPEX by aliaxis

DALABINE2024U

Installation

To ensure professional installation, make sure all installers have undergone training by IPEX in the correct handling, joining and installation methods of IPEX thermoplastic products.

POINTS TO REMEMBER

a. YELLOW & BLUE ELASTOLIVES DO NOT REQUIRE PRE-HEATING.

   If heated, maximum temperature should not exceed 175°F. (79°C)

b. YELLOW LABLINE AND BLUE PLENUMLINE ELASTOLIVES ARE NOT INTERCHANGEABLE

c. The pipe end should be clean and there should be no deep longitudinal grooves in it.

d. It is desirable to use a chain vise to hold 3" and 4" pipe firmly during cutting and grooving operations. When grooving 1-1/2" and 2" pipe, a strap wrench should be used to hold the pipe to prevent its rotation.

e. After grooving, the pipe should be kept clean so that foreign material is not introduced into the groove.

f. Ensure the grooving tool has a sharp blade to make a clean-shouldered groove.

g. The cutting blade should always be fully retracted whenever the tool is put on or taken off the pipe. If any resistance is felt when putting the tool onto the pipe or taking it off, the blade position should be checked.

h. Each nut must be fully tightened as the installation progresses. Do not assemble the system loosely and tighten nuts last, as layout length errors will go undiscovered until such time as the nuts are finally tightened. Avoid misalignment.

i. When tightening fittings, the dry fitting surfaces tend to bind against each other preventing the nuts from being fully tightened. To overcome this, either IPEX Acid Waste Lubricant or IPEX approved petroleum jelly should be used on fitting threads and elastolives. The lubrication allows the pipe and elastolive to glide smoothly into position against the fitting sealing area and enables the nuts to be tightened to their full thread capacity.

j. Use two spanner wrenches when tightening fittings. This enables the nuts to be tightened to their full thread capacity without damaging the fitting.

Procedure

1. Ensure each fitting is supplied with the correct number of elastolives (sealing rings) and nuts.

2. Verify the grooving tool is sharp. Cut the pipe to the desired length using a tubing cutter fitted with a wheel designed for plastic pipe. A handsaw and miter box may also be used. Ensure pipe ends are square and trimmed free of burrs.

3. Examine the grooving tool to ensure that the cutting blade is fully retracted. Insert the pipe into the grooving tool.

GROOVING TOOL BLADE POSITIONING

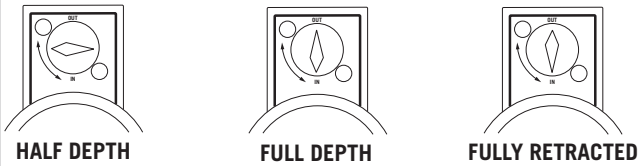

4. Set the grooving blade at the half-depth position and rotate the tool in a counter-clockwise direction. After one complete turn, set the blade at the full-depth position and again rotate the tool one full turn counter-clockwise. Fully retract the blade and remove the tool from the pipe.A shallow groove has now been formed around the pipe. Any material left as a feather edge in the groove should be removed. Care should be taken not to damage the square edge (shoulder) of the groove, particularly at the edge near the spigot end of the pipe as this is the primary sealing surface.

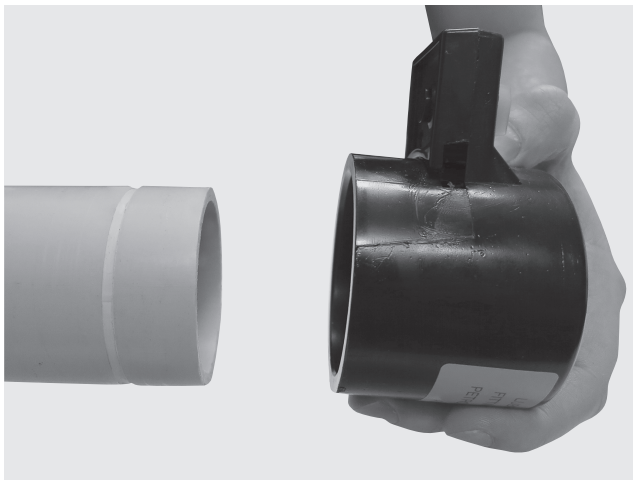

Feathered or rounded edges may indicate a worn tool and possible leakage. Make sure the groove shoulders are sharp.

Installation Procedures

1-1/2" and 2" Joint Details

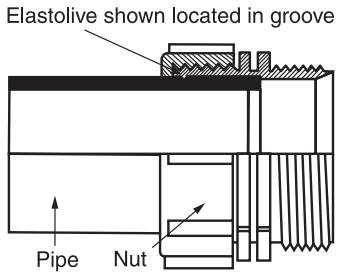

Once engaged in the groove, the elastolive virtually becomes part of the pipe and when the nut is tightened, the pipe is locked into the fitting.

3" and 4" Joint Details

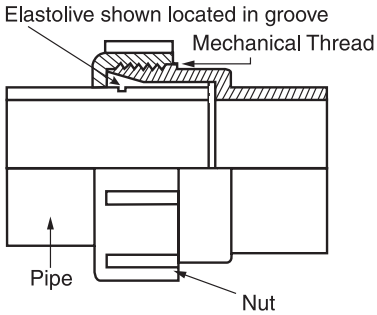

The 3" and 4" joint design differ from smaller versions in that the sealing ridges are located on the fitting and the elastolive extends to the end of the pipe.

5. Place the nut onto the pipe with the threaded side to the spigot end of the pipe. Take the elastolive, stretch it and pull it over the pipe with the thick edge first and the taper pointing to the spigot end of the pipe. Slide it down the pipe and onto the groove. Once on the groove "work it" a bit to make sure that the rib on the underside of the elastolive engages the full circumference of the groove.

   Note: Use IPEX Acid Waste Lubricant on 3" and 4" elastolives to aid installation when sliding elastolives on to pipe.

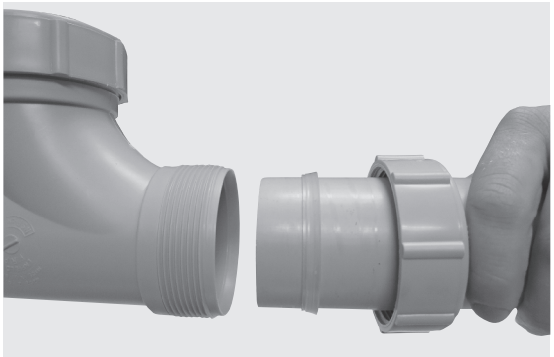

*If you are working on a job that has the old translucent non-elastic olives, consult your "heat olive" Technical Bulletin or call IPEX Customer Services for technical information.

6. Apply IPEX Acid Waste Lubricant or IPEX approved petroleum jelly to both the thread and the elastolive then push the pipe squarely into the fitting.

   Note: All factory shipped fitting nuts must be disassembled for lubrication.

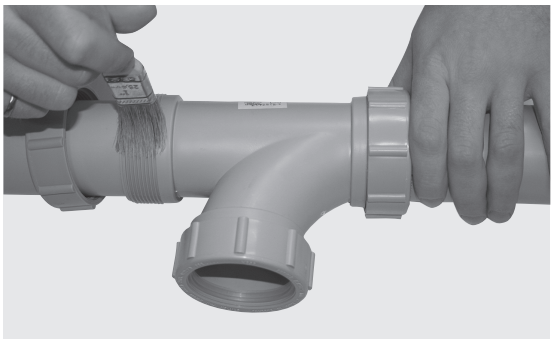

7. Hand-tighten the nut, then tighten using a spanner wrench. For stability and leverage, two spanner wrenches may be used as depicted. The nut must be tightened to achieve full thread engagement.

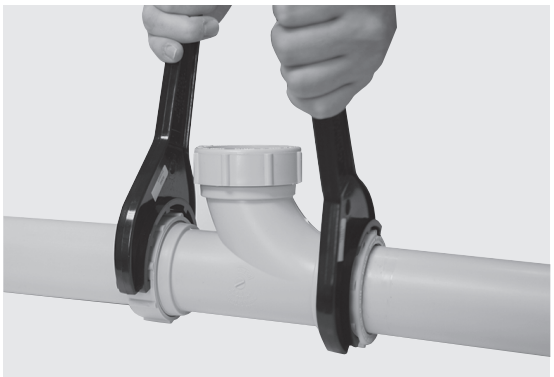

The joint is now ready for testing.

Average Number of Joint per kilogram of IPEX Acid Waste Lubricant*

Pipe size (in)	No. of Joints / kg
1-1/2	250
2	250
3	100
4	67

* The figures in the table are estimates based on laboratory tests

Note: Due to the many variables in the field, these figures should be used as a general guideline only.

LABLINE®

Hydrostatic Testing Procedures

WARNING

Use of compressed air or gas in PP or PVDF pipe and fittings can result in explosive failures and cause severe injury or death.

- NEVER use compressed air or gas in Enfield, Labline, or Plenumline pipes, fittings, or accessories.
- NEVER test Enfield, Labline, or Plenumline systems with compressed air or gas, or air-over-water boosters.
- ONLY use Enfield, Labline, or Plenumline systems for approved chemicals.

The purpose of a site pressure test is to establish that all joints have been correctly made.

Hydro test in accordance with local plumbing code or with authority having jurisdiction or with a maximum of 10 ft of head pressure. After making the first 20 or 30 joints, it is recommended that a test be applied to prove that the joint-making technique is satisfactory. If a leak is discovered, follow the appropriate procedure below.

Hydrostatic testing of the joints can be performed immediately after the final joint has been completed. The low pressure testing procedure detailed below should be strictly followed.

1. Fully inspect the installed piping for evidence of mechanical abuse and suspect joints.
2. Split the system into convenient test sections, not exceeding 1,000 feet. The piping should be capped off with an expandable plug at the end of the pipe section to be tested.
3. Prior to starting the test in below grade applications, straight lengths of pipe should be backfilled between fittings that are tested.
4. Slowly fill the pipe section with water, taking care to evaluate all trapped air in the process. Use air release valves in any high spots in the system. Do not pressurize at this stage.
5. Leave the pipe for at least one hour to allow an equilibrium temperature to be achieved.
6. Visually check the system for leaks.
7. Pressurize the system to a suggested maximum of 10 feet of head by means of a standard 10′ standing water test using a 10′ vertical riser, or a low-pressure hand pump.
8. Leave the line at 10 of feet head for a period of 2 hours, during which time the water level should not change (standing water test), nor should the pressure gauge reading change (hand pump test).
9. If there is a significant drop in pressure, or extended times are required to achieve the desired pressure, either joint leakage has occurred or air is still entrapped in the line. In this event inspect for joint leaks. If none are found, check for entrapped air – these air pockets must be removed prior to continuing the test.
10. If joints are leaking, tighten the nut 1/8 to 1/4 turn and wipe the fitting to remove excess water. This should normally cure the problem. If it does not, then the grooving or setting of the elastolive should be investigated. Drain the system and undo the suspect fitting. Test first that the elastolive feels tight on the pipe by attempting to turn it with reasonable pressure such as you might use to unscrew the cap of a bottle. The elastolive should not easily move around the pipe. If it does, it should be replaced. If the elastolive is tight, examine it, particularly at the front, for signs of bad grooving or shavings between the elastolive and the groove. If the front edge of the groove is damaged, the joint must be re-made and the piece of pipe replaced. When examining a leaking 3″ or 4″ joint, particular attention should be paid to possible misalignment, as this is the most likely cause of such a leak. Make sure any misalignment is corrected before re-testing.
11. Repeat the 10 feet head test after repairing any leaking joints, following the procedure described above.

LABLINE®

Material Properties

	Properties	Materials	
		Valve	Standards
	Specific Gravity	0.94	D1505
	Tensile Yield Strength @ 2"/Min.	4400 psi	D638
	Flexural Modulus	215,000 psi	D790
	Hardness, Rockwell R	100	D1706
	Izod Impact, Notched	1.0 ft. lbs/in.	D256
	Coefficient of Linear Expansion	6×10^{-5} in/in/F	D696
	Heat Deflection Temperature @ 66 psi load	220 – 240°F	D648
	Heat Deflection Temperature @ 264 psi load	195°F	D648
	Water Absorption. 24 hrs.	0.01%	D570
*	Time of Burning (sec.)	< 5	D635
*	Extent of Burning (mm)	< 5	
*	Burning Class	V2	UL94
*	Maximum Smoke Density	62.0	D2843
*	Smoke Density Rating	40.1	
*	Oxygen Index %	28	D2863

* All burning properties apply to FRPP pipe and fittings only.

Labline® Long Form

General

Acid waste drain and vent system, as shown on drawings, shall be NSF listed, Schedule 40, polypropylene as manufactured by IPEX to include pipe supplied in 10 ft. lengths (or 20 ft lengths if NFRPP is specified), and matched fittings, traps and neutralization tanks from the same manufacturer. It shall also include recommended adapters to connect to other piping materials, where applicable.

Material

Pipe shall be made from NSF listed Type 110 or 210, flame retardant polypropylene conforming to ASTM D4101, with a maximum average flame spread of zero seconds and a maximum extent of burning of 13 mm, in accordance with ASTM D635. Matched fittings shall be made from NSF listed flame retardant polypropylene with average maximum burn time of 80 seconds and maximum extent of burning of 20 mm in accordance with ASTM D635.

If NFRPP pipe is specified, it shall be made from NSF 14 listed and CSA certified Schedule 40 PP as manufactured by IPEX.

Pipe shall comply with ASTM F1412 and material used shall comply with the material requirements of ASTM D4101.

Fittings

Fittings shall be NSF listed, be of all plastic construction and be designed to lock into a machined groove on the mating piping. All fittings shall have integrally molded union connections. No metallic grab rings or clamps shall be allowed. Fittings containing EVA (ethylene vinyl acetate) are strictly prohibited. Couplings shall not be added to make mechanical joint fittings. Fittings shall be Labline or approved equivalent.

Joints

Connections between polypropylene pipe and matched fittings shall be made using the Labline Joint.

Installation and Testing

Installation and testing shall be in accordance with the contract drawings, the manufacturer's recommendations and the local plumbing codes. Testing with compressed air is prohibited. The entire system shall be installed free of stress and in proper alignment. Horizontal supports shall provide a wide bearing area and be free of burrs or sharp edges. Support spacings shall be in accordance with the manufacturer's recommendations and local plumbing codes. Vertical piping shall have riser clamps at each floor. Pipe supports shall be installed so that horizontal piping is in uniform alignment and with a uniform slope of at least 1/8" per foot, or in accordance with the local plumbing codes.

Labline Short Form

Acid waste drainage and vent system comprising pipe, matched fittings, neutralization tanks and adapter fittings shall be from a single source. Pipe shall be NSF listed, flame retardant, schedule 40 polypropylene and be joined by Labline fittings. All fittings shall be NSF listed and be of an all plastic construction, but must not contain components made from EVA, (ethylene vinyl acetate). Installation and testing shall be in accordance with the contract drawings, the manufacturer's recommendations and the local plumbing codes.

LABLINE®

About IPEX

About IPEX by Aliaxis

As leading suppliers of thermoplastic piping systems, IPEX by Aliaxis provides our customers with some of the largest and most comprehensive product lines. All IPEX by Aliaxis products are backed by more than 50 years of experience. With state-of-the-art manufacturing facilities and distribution centers across North America, we have established a reputation for product innovation, quality, end-user focus and performance.

Markets served by IPEX by Aliaxis include:

- Electrical systems
- Telecommunications and utility piping systems
- PVC, CPVC, PP, ABS, PEX, FR-PVDF and PE pipe and fittings (1/4" to 48")
- Industrial process piping systems
- Municipal pressure and gravity piping systems
- Plumbing and mechanical piping systems
- PE Electrofusion systems for gas and water
- Industrial, plumbing and electrical cements
- Irrigation systems

Products manufactured by IPEX Inc and distributed by IPEX USA LLC.

Encase™, Enfield™, Floway™, Labline®, Neutrasystem2™, Neutratank®, and Plenumline™ are trademarks of IPEX Branding Inc.

This literature is published in good faith and is believed to be reliable. However, it does not represent and/or warrant in any manner the information and suggestions contained in this brochure. Data presented is the result of laboratory tests and field experience.

A policy of ongoing product improvement is maintained. This may result in modifications of features and/or specifications without notice.

ipexna.com
Toll Free: 800 463-9572

IPEX by aliaxis