Day-Brite CFI by signify

Recessed

ClearAppeal 2x2

2CAX up to 4500 lumens

Project:

Location:

Cat.No:

Type:

Lamps: Qty:

Notes:

Day-Brite / CFI ClearAppeal LED recessed is a fully luminous aperture luminaire providing modern appeal to architectural spaces. Featuring a regressed aesthetic with balanced glare gradient, ClearAppeal delivers high performing even illumination and high visual comfort. Its architectural style, coupled with controls options, makes ClearAppeal an ideal choice for applications such as office, institutional, and healthcare, where energy savings and customized effect are desired.

Ordering guide – standard & wireless controls

Standard configurations available with all choices, unless otherwise noted. Base configurations selections indicated by blue.

example: 2CAXG38L840-2-DS-UNV-DIM-SWZDT

Width	Family	Ceiling Type	Lumens (nominal delivered)	Efficacy	Color	Length	Center Diffuser	Voltage	Driver	Options
2	CAX	G			–	2 –	DS –	–	–	
2 2'	**CAX** ClearAppeal Gen 2	**G** Grid	**Standard configurations** **30L** 3000 **38L** 3800 **45L** 4500 **Base configuration** **38B** 3800	**Blank** Standard **H**[5] High	**830** 80 CRI, 3000K **835** 80 CRI, 3500K **840** 80 CRI, 4000K **850** 80 CRI, 5000K	**2** 2'	**DS** Diffuse (smooth)	**UNV** Universal Voltage, 120-277 volt **347** 347V	**DIM**[1] Dimming **SDIM** Step dimming to 40% input power **LDE** Lutron LDE5, 5% dimming **LDEH** Lutron LDE1, 1% dimming **DALI** DALI dimming	**F1** 3/8" flex, 3 wire 18 gauge 6' **F2** 3/8" flex, 4 wire 18 gauge 6' **F1/D** 3/8" twin flex, 3 wire 18 gauge 6' for dimmable luminaires **F2/5W** 3/8" single flex, 5 wire 18 gauge 6' for dimmable luminaires **F2/6W** 3/8" single flex, 6 wire 18 gauge 6' for dimmable and emergency luminaires **GLR** Fusing, fast blow **GTD/E**[6] UL924 listed Bodine GTD factory installed on driver input **GTD/SNSR**[6,7] UL924 listed Bodine GTD factory installed between driver and sensor **BSL10LST**[4] Bodine 10W selftesting battery pack **BSL6LST**[4] Bodine 6W selftesting battery pack **DSC** Quick driver disconnect **IAP**[2] Integral Interact Pro RF sensor, enables wireless connected lighting control **IAO**[2] Integral Interact Office daylighting and occupancy sensor, enables wireless connected lighting control **SWZDT**[2] Integral sensor, daylighting and occupancy, advanced grouping with dwell time **CHIC**[3] Chicago Plenum rated

Ordering guide – PoE controls

example: 2CAXG38L840-2-DS-LV-POE-IAO

Width	Family	Ceiling Type	Lumens (nominal delivered)	Efficacy	Color	Length	Center Diffuser
2	CAX	G			–	2 –	DS –
2 2'	**CAX** ClearAppeal Gen 2	**G** Grid	**Standard configurations** **30L** 3000 **38L** 3800 **45L** 4500	**Blank** Standard	**830** 80 CRI, 3000K **835** 80 CRI, 3500K **840** 80 CRI, 4000K **850** 80 CRI, 5000K	**2** 2'	**DS** Diffuse (smooth)

Voltage	Driver	Options
LV –	POE –	
LV Low voltage	**POE** Power over ethernet	**IAO** Integral Interact Office daylighting and occupancy sensor, enables wired connected lighting control **EMPOE** 600lm integral emergency driver and battery pack

Footnotes

1 Integral controls options dimmable to 5% via wireless wall switch. Non-controls options are 0-10v dimmable to 1% for Standard configurations,and to 10% for Base configurations.
2 Specify only with -DIM driver option.
3 CHIC option not provided with air return functionality.
4 Emergency options not available with 347V.
5 High efficacy option may only be ordered with Standard lumen configurations.
6 Must be installed in conjunction with a UL1008 device.
7 Must be ordered with an integral sensing option.

Accessories (order separately)

- **FSF422** – 2'x2' surface mount field installation kit (field assembled)
- **FMA22** – 2'x2' "F" mounting frame for NEMA "F" ceiling
- **CGXDS22L** – 2'x2' ClearAppeal Gen2 replacement lens
- **CGXDS22LC** – 2'x2' ClearAppeal Gen2 with controls replacement lens

interact ready.

2CAX ClearAppeal recessed 2x2

up to 4500 lumens

Application

- Ideal for modern offices, institutional, retail, and healthcare applications.
- Modern architectural styling to complementany space.
- Full width luminous lens provides smooth brightness and high visual comfort.
- Directs a controlled amount of light to higher angles to eliminate "cave effect" without creating glare.
- Available in standard efficacy and high efficacy (H) configurations up to 130lm/W.
- 80 CRI minimum source provides a balanced spectral power distribution.
- Suitable for use with NEMA G (15/16") and NFG (9/16") suspended t-grid ceilings. NEMA F flange ceilings require the FMA24 accessory (ordered separately).

Construction/Finish

- Robust and durable dieformed embossed steel housing and end caps.
- Molded one-piece acrylic diffuser may be removed without tools for access to LED boards and driver(s).
- Unique spring retainers ensure the diffuser is centered in the housing opening at all times.
- T-bar grid clips are built into luminaire end caps for quick and easy installation, no extra parts.
- Air return functionality is standard for all configurations. See air flow and noise data on page 4.

Energy data

Configuration	Nominal CCT/ CRI	Flux (lm)	Input Power (W)	Efficacy (LPW)	DLC
2CAXG38B835	3500K/80	3990	34	117	Standard
2CAXG38B840	4000K/80	4007	34	116	Standard
2CAXG30L835	3500K/80	3053	26	116	Standard
2CAXG30L840	4000K/80	3061	27	116	Standard
2CAXG30LH835	3500K/80	3023	24	124	Standard
2CAXG30LH840	4000K/80	3097	24	127	Premium
2CAXG38L835	3500K/80	3884	34	114	Standard
2CAXG38L840	4000K/80	3887	34	114	Standard
2CAXG38LH835	3500K/80	3797	30	126	Premium
2CAXG38LH840	4000K/80	3814	29	130	Premium
2CAXG45L835	3500K/80	4587	42	111	Standard
2CAXG45L840	4000K/80	4614	42	110	Standard
2CAXG45LH835	3500K/80	4612	36	127	Premium
2CAXG45LH840	4000K/80	4716	36	130	Premium

- Suitable for end to end continuous row mounting. 1" gap between luminaires requires chase nipple to accommodate through wiring (by others).
- Sheetmetal componets are multi-stage phosphate treated for maximum corrosion resistance and finish coat is high reflectance basked white enamel.
- Integral louvers on housing ends allow air from the heated space to return to a pressurized plenum.

Electrical

- Driver and LED board are accessible from below by easy removal of lens.
- Non-controls Base configurations 0-10V dimmable to 10%.
- Non-controls Standard configurations 0-10V dimmable to 1%.
- Standard configurations with controls options dimmable via wireless switches (see below).
- Predicted L70 lumen maintenance up to 87,000 hours at 25°C ambient for all configurations.
- Emergency battery packs accessible from above. To estimate lumen output in emergency mode, multiply emergency pack wattage by luminaire efficacy, then by 1.10.
- The GTD/E option is used to bypass wall switches and allow luminaire operation on auxiliary power. Generator transfer requires installation in conjunction with a UL1008 listed device.
- The GTD/SNSR option is used to bypass integrated sensor control in the event of utility power loss. Generator transfer requires installation in conjunction with a UL1008 listed device.
- Compliance to CAN ICES-005-A/ NEB-005-A and FCC Part 15-A.

Validation

- cETLus listed for use in damp locations
- Rated for direct contact with insulation (IC)
- CCEA Chicago Plenum listed
- ClearAppeal luminaires are Designlights Consortium® qualified. Please see the DLC QPL list for exact catalog numbers, www.designlights.org/QPL

Environment

- Rated for dry or damp locations in operating ambient temperatures 0-30°C (32-86°F). Many luminaire components, such as reflectors, refractors, lenses, sockets, lampholders, and LEDs are made from various types of plastics which can be adversely affected by airborne contaminants. If sulfur based chemicals, petroleum based products, cleaning solutions, or other contaminants are expected in the intended area of use, consult factory for compatibility.Not suitable for natatorium environments.

Warranty

- 5 year manufacturer's limited warranty.
  Visit signify.com/warranties for complete warranty information.

Dimensions

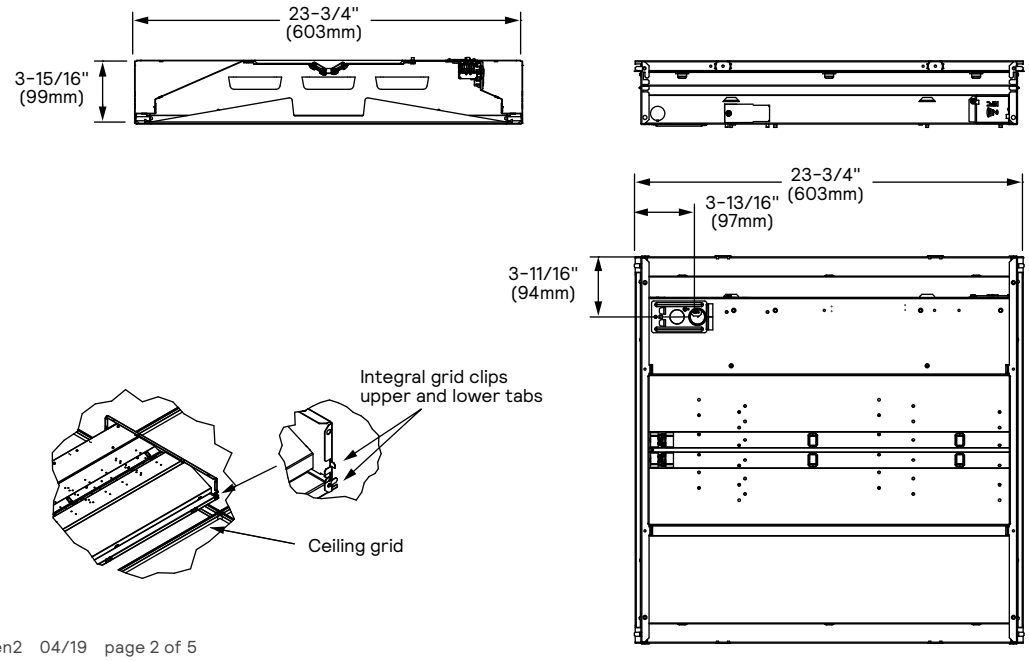

2CAX ClearAppeal recessed 2x2

up to 4500 lumens

Wireless Controls Options

SpaceWise DT (SWZDT)

- Standalone daylight and occupancy sensing with advanced grouping and dwell time
- Commissioning via compatible Android phone and Philips Field App
- Dimming via compatible Zigbee wireless wall switch only (see link below for details)
- Register for the commissioning app at www.componentcloud.philips.com/#/register;first=true
- Integral sensing options may not be combined
- For more information including recommended switches, refer to the following: –

  SWZDT – www.usa.lighting.philips.com/systems/lighting-systems/spacewise

ClearAppeal shown with integral sensor

Interact Pro (IAP)

- Interact Pro brings the power of connected lighting to **small and medium businesses** without the complexity usually associated with connected lighting.
- Interact Pro includes an app, a portal and a broad portfolio of wireless Luminaires, lamps and retrofit kits all working on the same system.
- Commissioning via Interact Pro App (Android or iPhone)
- Prepare commissioning remotely via Interact Pro portal
- Requires compatible Interact Pro Gateway and internet connectivity for commissioning
- Compatible with UID8451/10 ZigBee Greenpower wireless dimmer switch
- Compatible with wireless Occ sensor (OCC SENSOR IA CM IP42 WH 10/1) or wireless Day/Occ sensor (OCC MULTI SENSOR IA CM WH 10/1)
- For more information on Interact Pro visit: www.interact-lighting.com/pro
- For more information on Interact Ready visit: www.philips.com/interact-ready

Interact Office (IAO)

- A wireless IoT connected lighting solution for **large enterprises** that span across multiple floors, buildings and require multiple gateways.
- View all your projects under one dashboard and easily compare insights from multiple projects in one view.
- Compatible Zigbee Green Power wall dimmer and wireless Occupancy or Daylight & Occupancy sensors available.
- Use Interact Office software and insights to increase building efficiency, achieve building wide integration and optimize space through occupancy analytics.
- Supports advanced IoT Apps on wayfinding, room/desk reservation and offers open APIs
- Requires compatible Interact Office Gateway and internet connectivity for commissioning.
- For more information on Interact Office Wireless, visit: www.interact-lighting.com/office or www.usa.lighting.philips.com/systems/system-areas/offices

Wired Controls Options

Interact Office Wired (PoE)

- PoE based IoT connected lighting solution for large enterprises that span across multiple floors, buildings and require multiple gateways.
- Use Interact Office software and insights to increase building efficiency, achieve building wide integration and optimize space through occupancy analytics.
- Supports advanced IoT Apps on Personal Control, Space Management, wayfinding, room/desk reservation and offers open APIs for light control and data exchange.
- PoE lighting controller is accessible from below.
- Integral sensor option for occupancy sensing (PIR) and/or daylight harvesting available for additional energy savings.
- Optional integral emergency controller and battery pack provides 600lm nominal output. Test switch and indicator light mounted on side of chassis on one end.
- Emergency battery has a 3 month pre-installed shelf life, and must be stored and installed in environments of 20C to 30C (-4F to 86F) ambient, and 45-85% relative humidity.
- For more information on Interact Office Wired, visit: www.interact-lighting.com/office or www.usa.lighting.philips.com/systems/system-areas/offices

2CAX ClearAppeal recessed 2x2

up to 4500 lumens

Air return

Integral louvers on housing ends allow air from the heated space to return to a pressurized plenum.

Return Air Data

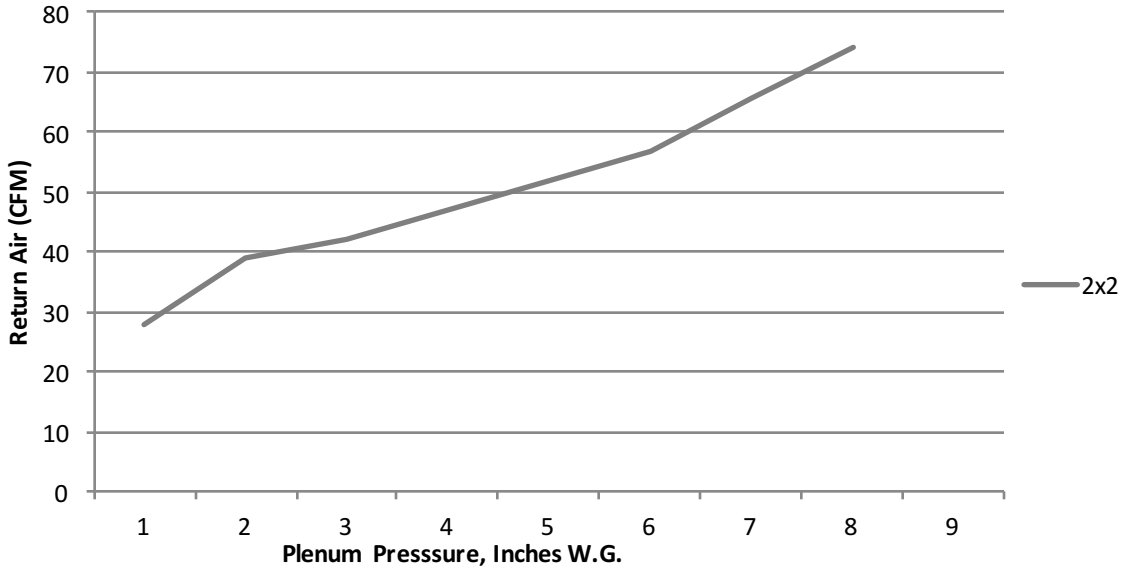

	2x2 Return Air - noise criteria							
CFM	28	39	42	47	52	57	65.5	74
NC (dB)	<15	26	31	33	38	42	44	46

Photometry

2x2 ClearAppeal recessed LED, base configuration, 3800 nominal delivered lumens — **LER - 117**

Catalog No.	2CAXG38B840-2-DS-UNV-DIM
Test No.	40558
S/MH	1.2
Lamp Type	LED
Lumens	4007
Input Watts	34

Comparative yearly lighting energy cost per 1000 lumens – **$2.05** based on 3000 hrs. and $.08 pwr KWH.

The photometric results were obtained in the Day-Brite laboratory which is NVLAP accredited by the National Institute of Standards and Technology.

Photometric values based on test performed in compliance with LM-79.

Candlepower

Angle	End	45	Cross	Back-45
0	1449	1449	1449	1449
5	1432	1442	1448	1442
15	1368	1382	1393	1382
25	1245	1268	1281	1268
35	1077	1108	1124	1108
45	882	918	940	918
55	680	711	740	711
65	424	510	537	510
75	225	286	315	286
85	60	74	64	74

Light Distribution

Degrees	Lumens	% Luminaire
0-30	1109	27.7
0-40	1801	44.9
0-60	3144	78.4
0-90	4008	100.0
0-180	4009	100.0

Average Luminance

Zone	End	45°	Cross
45	4096	4263	4368
55	3895	4074	4237
65	3298	3965	4176
75	2850	3628	4000
85	2273	2801	2401

Coefficients of Utilization

EFFECTIVE FLOOR CAVITY REFLECTANCE 20 PER (pfc=0.20)

pfc =	20							
Ceil	80			70			50	
Wall	70	50	30	70	50	30	50	30
RCR								
0	118	118	118	115	115	115	111	111
1	109	104	98	106	101	97	96	93
2	98	90	82	95	88	81	84	80
3	90	79	70	86	78	69	75	68
4	81	69	60	80	68	60	66	58
5	76	63	54	73	61	53	58	52
6	69	56	47	68	56	46	54	46
7	65	51	41	63	50	41	48	40
8	59	46	38	58	46	38	45	36
9	56	42	34	55	41	34	40	34
10	53	40	32	52	39	32	38	30

2CAX ClearAppeal recessed 2x2

up to 4500 lumens

2x2 ClearAppeal recessed LED, standard configuration, 3800 nominal delivered lumens — LER – 114

Catalog No.	2CAXG38L840-2-DS-UNV-DIM
Test No.	40552
S/MH	1.2
Lamp Type	LED
Lumens	3888
Input Watts	34

Comparative yearly lighting energy cost per 1000 lumens – **$2.11** based on 3000 hrs. and $.08 pwr KWH.

The photometric results were obtained in the Day-Brite laboratory which is NVLAP accredited by the National Institute of Standards and Technology.

Photometric values based on test performed in compliance with LM-79.

Candlepower

Angle	End	45	Cross	Back-45
0	1412	1412	1412	1412
5	1395	1405	1411	1405
15	1334	1347	1357	1347
25	1214	1235	1247	1235
35	1050	1080	1095	1080
45	860	894	916	894
55	664	692	720	692
65	415	463	488	463
75	219	277	307	277
85	59	75	63	75

Light Distribution

Degrees	Lumens	% Luminaire
0-30	1081	27.8
0-40	1754	45.1
0-60	3063	78.8
0-90	3889	100.0
0-180	3889	100.0

Average Luminance

Zone	End	45°	Cross
45	3996	4152	4256
55	3804	3963	4126
65	3225	3596	3792
75	2778	3514	3896
85	2224	2816	2367

Coefficients of Utilization

EFFECTIVE FLOOR CAVITY REFLECTANCE 20 PER (pfc=0.20)								
pfc =	20							
Ceil	80			70			50	
Wall	70	50	30	70	50	30	50	30
RCR								
0	118	118	118	115	115	115	111	111
1	109	104	98	106	101	97	96	93
2	98	90	83	95	88	81	84	80
3	90	79	70	86	78	69	75	68
4	81	69	61	80	68	60	66	58
5	76	63	54	73	61	53	59	52
6	69	56	47	68	56	46	54	46
7	65	51	42	63	51	41	48	40
8	59	46	38	58	46	38	45	36
9	56	42	34	55	41	34	40	34
10	53	40	32	52	39	32	38	30

2x2 ClearAppeal recessed LED, high efficacy configuration, 3800 nominal delivered lumens — LER – 130

Catalog No.	2CAXG38LH840-2-DS-UNV-DIM
Test No.	40570
S/MH	1.2
Lamp Type	LED
Lumens	3815
Input Watts	29

Comparative yearly lighting energy cost per 1000 lumens – **$1.85** based on 3000 hrs. and $.08 pwr KWH.

The photometric results were obtained in the Day-Brite laboratory which is NVLAP accredited by the National Institute of Standards and Technology.

Photometric values based on test performed in compliance with LM-79.

Candlepower

Angle	End	45	Cross	Back-45
0	1393	1393	1393	1393
5	1377	1386	1392	1386
15	1316	1328	1337	1328
25	1197	1217	1228	1217
35	1035	1064	1078	1064
45	847	880	901	880
55	643	681	708	681
65	409	448	479	448
75	211	272	304	272
85	56	70	61	70

Light Distribution

Degrees	Lumens	% Luminaire
0-30	1065	27.9
0-40	1728	45.3
0-60	3012	78.9
0-90	3815	100.0
0-180	3815	100.0

Average Luminance

Zone	End	45°	Cross
45	3937	4090	4187
55	3682	3903	4058
65	3179	3480	3722
75	2672	3455	3855
85	2115	2639	2288

Coefficients of Utilization

EFFECTIVE FLOOR CAVITY REFLECTANCE 20 PER (pfc=0.20)								
pfc =	20							
Ceil	80			70			50	
Wall	70	50	30	70	50	30	50	30
RCR								
0	118	118	118	115	115	115	111	111
1	109	104	98	106	102	97	96	93
2	98	90	83	95	89	81	84	80
3	90	79	70	88	78	69	75	68
4	81	69	61	80	68	60	67	58
5	76	63	54	73	61	53	59	52
6	69	56	47	68	56	46	54	46
7	65	51	42	63	51	41	48	41
8	60	46	38	58	46	38	45	38
9	56	42	34	55	42	34	40	34
10	53	40	32	52	39	32	38	30

The information presented in this document is not intended as any commercial offer and does not form part of any quotation or contract.

signify

© 2019 Signify Holding. All rights reserved. This document contains information relating to the product portfolio of Signify which information may be subject to change. No representation or warranty as to the accuracy or completeness of the information included herein is given and any liability for any action in reliance thereon is disclaimed. All trademarks are owned by Signify Holding or their respective owners.

Signify North America Corporation
200 Franklin Square Drive,
Somerset, NJ 08873
Telephone 855-486-2216

Signify Canada Ltd.
281 Hillmount Road,
Markham, ON, Canada L6C 2S3
Telephone 800-668-9008