BradyPrinter S3700

SIGN & LABEL PRINTER

User Manual

Copyright and Trademarks

Disclaimer

This manual is proprietary to Brady Worldwide, Inc. (hereafter “Brady”), and may be revised from time to time without notice. Brady disclaims any understanding to provide you with such revisions, if any.

This manual is copyrighted with all rights reserved. No portion of this manual may be copied or reproduced by any means without the prior written consent of Brady.

While every precaution has been taken in the preparation of this document, Brady assumes no liability to any party for any loss or damage caused by errors or omissions or by statements resulting from negligence, accident, or any other cause. Brady further assumes no liability arising out of the application or use of any product or system described, herein; nor any liability for incidental or consequential damages arising from the use of this document. Brady disclaims all warranties of merchantability of fitness for a particular purpose.

Brady reserves the right to make changes without further notice to any product or system described herein to improve reliability, function, or design.

Trademarks

BradyPrinter S3700 Sign & Label Printer is a trademark of Brady Worldwide, Inc.

Microsoft, Windows, Excel, Access and SQL Server are registered trademarks of Microsoft Corporation.

All brand or product names referenced in this manual are trademarks (™) or registered trademarks (®) of their respective companies or organizations.

© 2025 Brady Worldwide, Inc. All Rights Reserved.

Y5162416

Revision E

Brady Worldwide, Inc.
6555 West Good Hope Road
Milwaukee, WI 53223
bradyid.com

Brady Warranty

Our products are sold with the understanding that the buyer will test them in actual use and determine for themself the adaptability to their intended uses. Brady warrants to the buyer that its products are free from defects in material and workmanship, but limits its obligation under this warranty to replacement of the product shown to Brady's satisfaction to have been defective at the time Brady sold it. This warranty does not extend to any persons obtaining the product from the buyer.

THIS WARRANTY IS IN LIEU OF ANY OTHER WARRANTY, EXPRESS OR IMPLIED, INCLUDING, BUT NOT LIMITED TO, ANY IMPLIED WARRANTY OF MERCHANTABILITY OR FITNESS FOR A PARTICULAR PURPOSE, AND OF ANY OTHER OBLIGATIONS OR LIABILITY ON BRADY'S PART. UNDER NO CIRCUMSTANCES WILL BRADY BE LIABLE FOR ANY LOSS, DAMAGE, EXPENSE OR CONSEQUENTIAL DAMAGES OF ANY KIND ARISING IN CONNECTION WITH THE USE, OR INABILITY TO USE, BRADY'S PRODUCTS.

Safety and Environment

Please read and understand this manual before using the printer for the first time. This manual describes all of the main functions of the BradyPrinter S3700 Sign & Label printer.

Precautions

Before using the printer, please note the following precautions:

- Read all instructions carefully before operating the printer and prior to performing any procedure.
- Do not place the unit on an unstable surface or stand.
- Do not place anything on top of the unit.
- Keep the top clear of obstructions.
- Always use the printer in a well ventilated area. Do not block the slots and opening on the unit, which are provided for ventilation.
- Only use the power source indicated on the rating label.
- Use only the power cord that comes with the unit.
- Do not place anything on the power cord.
- This equipment is not intended for use by children.

Technical Support and Registration

Contact Information

For repair or technical assistance, locate your regional Brady Technical Support office by going to:

- **United States:** bradyid.com/techsupport
- **Canada:** bradycanada.ca/contact-us
- **Mexico:** bradyid.com.mx/es-mx/contacto
- **Latin America:** bradylatinamerica.com/es-mx/soporte-técnico
- **Europe**: bradyeurope.com/services
- **Australia:** bradyid.com.au/technical-support
- **Asia Pacific**: brady.co.uk/landing-pages/global-landing-page

Visit the Brady Knowledge Base at support.bradyid.com/s/

Registration Information

To register your printer go to:

- bradycorp.com/register

Repair and Return

If for any reason you need to return the product for repair, please contact Brady Technical Support for repair and replacement information.

Document Conventions

When using this document, it is important that you understand the conventions used throughout the manual.

• All user actions are indicated by **Bold** text.

Contents

1 • Introduction 1

System Specifications 1

Compatible Software 1

Physical and Environmental Characteristics 2

Proximity Range for Bluetooth 2

2 • Setup 4

Unpacking the Printer 4

What's in the Box 4

Save the Packaging 4

Registration 4

Printer Components 5

Power 6

Printer Settings 7

Language 7

Date and Time 7

Power Save Mode 8

Units of Measure 8

Font 8

Barcode Defaults 9

Printing Defaults 10

Software for Creating Labels 11

Mobile (Wi-Fi and Bluetooth Models Only) 11

Desktop 11

Installing the Windows Driver (Optional) 11

Connecting the Printer 12

Ethernet Network 12

Wi-Fi 13

Bluetooth 14

USB 14

Loading Supplies 15

Installing the Ribbon 15

Removing the Ribbon 17

Installing Labels 17

Removing the Labels 19

Accessories 19

3 • General Operation 20

Screen Components 20

Home Page 20

Menus 21

Dialog Boxes 21

Creating a Simple Text Label **23**

4 • Formatting Labels 24

Elements **24**
Adding an Element 25
Formatting an Element 25
Moving an Element 26
Zooming an Element 26
Aligning an Element 26
Framing an Element 28
Coloring an Element 29
Scrolling 29
Copying and Pasting 29

Text Elements **30**
Adding Text 30
Selecting or Deselecting Text 30
Inserting Text 32
Deleting Text 32
Replacing Text 32
Clearing Text 32

Font **33**
Changing Fonts 34
Importing Fonts 34
Autosizing Fonts 35
Adding Special Characters 36
Accented Characters 37
Text Justification 39
Reverse Formatting 40
Expanding or Condensing Text 41

Serial Object Elements **42**
How Serialization Works 42

Date/Time Object Elements **43**

Barcode Object Element **44**
Add a Barcode 44
Change Barcode 44
Human Readable Text 45
Check Digit 46
Start/Stop Code 46

Graphic Object Elements **47**
Importing Graphics 47

Set Data Source **49**
Convert from Serial Data 50
Convert from Date/Time to Constant 50

Print/Cut **51**
Weeding 51

Cut-Out Shapes **52**

5 • Printing 53

Printing Labels Created on the Printer **53**

Cancel a Print Job **54**

System Interruption 54

User Interruption 54

Print Preview **54**

Mirror Print **55**

Advanced Settings **55**

Print Energy 55

Print Speed 56

Adjusting Print Offset 56

Printing Labels Created on a Computer or Device **57**

Copies **57**

XY Cutting **57**

XY Cutter Blade Height 58

Using the XY Cutter 58

6 • Label Types 60

Label Fixed Length **60**

Orientation 61

Label Width **62**

Framing a Label **63**

Label Types **63**

General Templates 63

Customizing the Home Page **64**

Application Label Types **65**

Clearing 65

Save, Open, Delete 65

Arc Flash Label Type 67

Circle Gauge Label Type 68

Gradient Scale 70

GHS/CLP 71

Right-To-Know 72

Pipe Markers 75

Rollform Pipe Marker 77

CLP PipeMarkers (Not available in all regions) 79

HSID Pipe Markers (Not available in all regions) 82

PreMade Labels 85

Tags 86

WHMIS 86

7 • File Management 88

File Naming Standards **88**

Save 88

New Label 89

Open a File 89

Delete a File 89
Files Saved from BradyWorkstation on USB 90
8 • Maintenance 91
Upgrading Firmware 91
Upgrading using Brady Workstation 91
Upgrading using a USB Drive 91
Updating Printer Label Library Values 92
Cleaning the Printer 93
Internal Components 93
Touchscreen 94
Cutter Blade 94
Cutter Blade Exit Area 97
Sensors 97
Printhead 99
Media Wiper 100
XY Cutter Blade 101
Upper Guide and Cut Pad 102
Replacing the Printhead 105
9 • Troubleshooting 107
Resetting the Printer 115
A • Reference Images 116
PreMade Labels Reference Images - Europe 116
PreMade Labels Reference Images - North America 116
Admittance, Exit, Confined Spaces 117
Alerts and First Aid 118
Chemical - Hazardous Materials 118
Conduit - Voltage 118
Electrical Hazard - Lockout 119
Fire 120
Funny Signs 120
Graphics - Mandatory 121
Graphics - Packaging 122
Graphics - PPE 122
Graphics - Prohibition 123
Graphics - Signal Words 124
Graphics - Warning 124
Inspection 124
Machine - Operational 125
No Smoking 126
Pipe Marker Arrows 127
Pipe Markers 128
Protective 130
Warning Stakes 130
B • Character Mapping & Keyboard Layouts 131
Character Mapping 131

Americas QWERTY 131
European AZERTY 132
European QWERTZ 133
European QWERTY 134
European Cyrillic 134
Keyboard Layouts 135
QWERTY - North America Keyboard Configuration 135
QWERTY - European Keyboard Configuration 135
AZERTY - European Keyboard Configuration 136
QWERTZ - European Keyboard Configuration 136
CYRILLIC - European Keyboard Configuration 137
C • Regulatory Compliance 138
Agency Compliance and Approvals 138
United States 138
Canada 138
Mexico 138
Europe 139
Turkey 139
China 140
Wireless Regulatory Information 141
United States 141
Canada 142
Mexico 142
European Union 142
Hong Kong 142
South Africa 143
International 143
D • Licensing 144
End User License Agreement for Microsoft Windows CE© 144

1 Introduction

The BradyPrinter S3700 Sign & Label printer is a thermal transfer printer with a 4" (101.6 mm) printable width that can handle label supply from 0.5" to 4" (12.7 mm to 101.6 mm). It includes the following features:

- Color 7" touchscreen LCD display, plus keyboard input for ease of use.
- Pre-designed layouts for many standard-use label applications.
- Hundreds of graphics for inclusion on your labels.
- Single or multi-color print resolution: 300 DPI.
- Print speed up to 5 ips.
- Print signs and banners that are up to 102" (2590 mm) for monochrome and 48" (1219 mm) for multi-color (4 colors).
- Continuous and die-cut label supplies in a variety of high-performance materials and colors.
- Transfer graphics from USB flash drive. Supported graphic formats are Windows Metafile (*.wmf) and Monochrome Bitmap (*.bmp).
- Automatic Cutter, XY Cutter.
- Ethernet capabilities and Wireless or Bluetooth on select models.

System Specifications

The printer has the following specifications:

- Voltage: 100 to 240 VAC, 50/60 Hz 3.5A
- Ribbon Size: Width 4.0" (101.6 mm) and lengths of up to 200 ft (60.8 m) for monochrome ribbon
- Minimum label length (cut): 0.5" (12.7 mm)
- Maximum label length (continuous media):
    - Single color: 102" (2590 mm)
    - Multi-color: 48" (1219 mm) by swapping monochrome ribbons
    - Multi color: 16" (356 mm) by using paneled ribbons

Compatible Software

The BradyPrinter S3700 Sign & Label printer is compatible with Brady Workstation desktop label creation software. When used with Brady Workstation software, no driver installation is required and the software automatically recognizes the installed label supply and ribbon, making label creation easy and fast.

Physical and Environmental Characteristics

The BradyPrinter S3700 printer has the following physical and environmental characteristics:

Physical	U.S. Units	Metric Units
Dimensions	18.5" W x 11" H x 14.2" D	470 x 280 x 360 mm
Weight	35 lb.	20 kg

Note: The table below refers to the BradyPrinter S3700 printer only. Consumable performance may vary.

Environmental	Operation	Storage
Temperature (Printer) Exposing the printer to direct sunlight is not recommended.	59° to 104° F (15° to 40° C)	-4° to 122° F (-20° to 50° C)
Relative Humidity (Printer)	15% to 80% (non-condensing)	15% to 90% (non-condensing)

CAUTION! Avoid using the printer near water, in direct sunlight, or near a heating device.

Proximity Range for Bluetooth

The printer should be within 65 ft (19.8 m) of the device to pick up the Bluetooth signal.

Note: Obstacles between the printer and Bluetooth receiver can shorten the range.

Note: Bluetooth is an optional feature that may not be on your printer.

Keyboard Configurations

Your keyboard configuration depends on the region where you do business. The following are the currently supported keyboard configurations.

Keyboard Type
Americas QWERTY
QWERTY
AZERTY
QWERTZ
Cyrillic

See “Accented Characters” on page 37 for instructions on how to access all of the keyboard characters.

2 Setup

Unpacking the Printer

Carefully unpack and inspect the exterior and interior of the printer.

What's in the Box

Before setting up the printer, verify that you have received the following items in the packaging:

- BradyPrinter S3700 Sign & Label printer
- Power cord
- USB Cable
- Mouse
- Cleaning Kit
- Quick Start Guide
- Brady Workstation Basic Label Design Suite insert
- USB flash drive with the User Manual, Quick Start Guide, and Driver Installation Guide in various languages

Save the Packaging

Save the packaging surrounding your printer in case you have to ship the printer and accessories back to the supplier.

Registration

Register your printer on-line at www.bradycorp.com/register to receive free product support and updates!

Printer Components

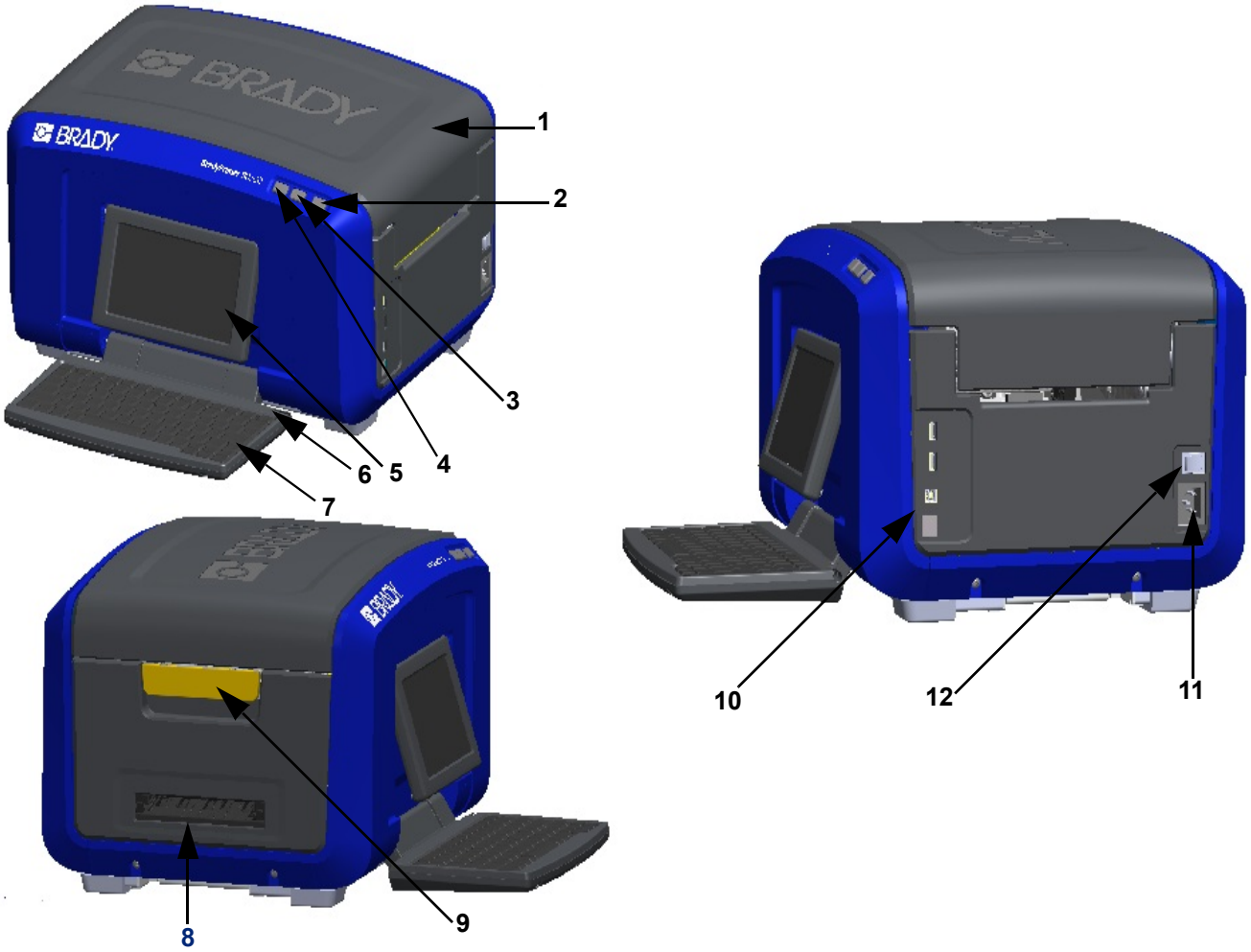

1	Cover	**7**	Keyboard (flips down)
2	Power button (green)	**8**	Label exit chute
3	Cut label button	**9**	Cover release latch
4	Feed label button	**10**	USB type A Port, USB type B Port and Ethernet Port
5	Touchscreen (flips out)	**11**	Power corder connection
6	Stylus	**12**	On/Off switch

Power

CAUTION! Before connecting power, be sure to remove the desiccant from inside the printer.

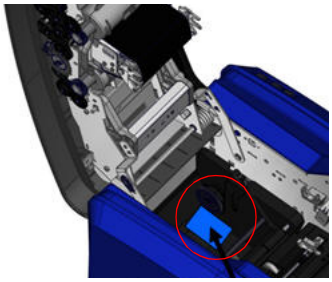

1. Plug the power cord into the power cord connection port on the right side of the printer.

2. Plug the other end of the power cord into an electrical outlet.
3. Turn the On/Off switch to the ON position to power up the printer.

   The printer automatically displays the primary Home Page. The size and color of the currently installed label supply and ribbon and other status indicators are shown.

Note: If there is no ribbon or label installed, the system defaults to black ribbon and 4" (101.6 mm) wide continuous white media.

Printer Settings

The following system default settings can be found under the setup icon .

Note: Instructions denote touching the LCD display's touchscreen. Alternatively, you can use a mouse by plugging it into one of the USB ports on the side of printer.

Language

Choose the language in which you want all printer menus, functions, and data displayed.

1. On the touchscreen, touch **Menu**.
2. Under System, touch **Setup**.
3. Touch **Localization**.
4. Select the desired language.
5. Touch **OK** to save the changes.

Date and Time

The date and time are stored on the printer and automatically increment forward even when the printer is turned off. Time is based on a 12-hour clock (HH:MM:SS), so you must indicate A.M. or P.M.

1. On the touchscreen, touch **Menu**.
2. Under System, touch **Setup**.
3. Touch **Clock Settings**.
   a. To set the date, either select the arrow for the drop-down menu to open the calendar and use the arrows to select the month or touch the month and date data fields and use the keyboard to enter the numbers.
   b. To set the time, either use the up and down arrows to increase or decrease the time or touch the hour or minute section in the data fields and use the keyboard to enter the numbers.
4. Touch **OK** to save the changes.

Power Save Mode

To conserve energy, the printer will go into power save mode after a period of inactivity. Any data on the screen is retained and available when the printer is reawakened.

If a label is defined when the system goes into power save mode and the label supply is changed to a supply where the label no longer fits, you will be prompted to make the data fit or save the existing label before continuing. If you choose the option to make the data fit, the system may move or resize the objects so they fit on the new label size.

The default inactive time is 5 minutes, which you could leave as is or customize up to 1 hour or never.

1. On the touchscreen, touch **Menu**.
2. Under System, touch **Setup**.
3. Touch **Clock Settings**.
4. Set the amount of inactive time before the printer goes into sleep mode.

Units of Measure

Set the unit of measure to inches or millimeters.

Once configured, you do not have to indicate “inches” or “millimeters” (or their globally accepted abbreviations or marks) when entering numbers in data fields. Likewise, in any scale or range of measurement field (as found under Label Type), the range of measurements will automatically configure to the units selected in the Menu function.

1. On the touchscreen, touch **Menu**.
2. Under System, touch **Setup**.
3. Touch **Localization**.
4. Touch the box next to the desired unit of measure.

   A checkmark will appear.
5. Touch **OK** to save the changes.

Font

If you know most of your labels will use a specific font, size or justification (left aligned or centered), set these options as defaults. If your defaults will not work with a particular label supply, the printer will automatically change them to what is compatible with the label supply being used. While you can always change the attributes for a specific label or label type, when the label supply and/or application label type is reloaded, it will return to these settings.

1. On the touchscreen, touch **Menu**.
2. Under System, touch **Setup**.
3. Touch **Text Defaults**.
4. Set your font, text units (font size) and justification.

   Note: Justification refers to the alignment of text between the left and right margin of the label.
5. Touch **OK** to save the changes.

Barcode Defaults

Barcodes are generated following industry standard symbology. A typical barcode is composed of vertical lines (bars) and spaces of varying thickness, depending on the text entered. Barcode elements support vertical resizing (height) only. The width of the barcode is based on data and symbology. However, some barcode widths (depending on symbology used) can be altered by changing the ratio and density of the bar code.

1. On the touchscreen, touch **Menu**.
2. Under System, touch **Setup**.
3. Touch **Barcode Defaults**.
4. Touch the up or down arrows to move through the list of symbology options.
5. Touch the desired symbology.

A check digit is used for error detection in a barcode. It consists of a single digit computed from the other digits in the barcode. If you want to use a check digit:

6. Touch Include check character.
7. When Include check character is selected, the Readable check character button displays. If you want the check digit to display with your barcode, touch Readable check character.

When using symbology Code 39 or Code 128, you are given the option to have the start/stop code readable with the barcode. The start code is a special character that signals the start of the barcode. Likewise, the stop code is a character that signals the end of the barcode.

To display the start/stop code for the chosen symbology:

8. Touch Readable start/stop (*).

A barcode is made up of a series of narrow and wide bars and spaces (called elements). The difference between the width of the narrowest and widest element is the ratio. Not all barcode types allow you to change the ratio. If you are using a Barcode Type that does not support this option, the Ratio field will not display.

To change the ratio (when available):

9. Under Ratio, touch the desired ratio to use.

Density refers to the thickness of the bars and spaces within a barcode. You can change the density (which in turn lengthens the barcode), but the size of the bars and spaces retain the same ratio to each other. For the most effective and reliable scanning, implement with the lowest possible density.

To change the density:

10. Touch the Density button and select the desired density.
11. Touch OK to accept the density change.

Barcodes are made up of bars and spaces, meant to be read by machines. Human readable text is the text that makes up the barcode, but able to be read by humans. You have the option to display the text above or below the barcode or never at all.

12. Under Human readable text, touch the desired option.
13. Touch **OK** to save the changes.

Printing Defaults

Auto Cut Settings

This allows you to cut each label after it is printed or cut at the end of the job.

Note: The auto cut settings are only available if a monochrome ribbon is installed.

In a multi-print job, such as serialized labels, cut mode determines if the printer should pause between each label for cutting the individual labels. If you select Cut at end of job, all labels in a serialized sequence print out as one long string, pausing for cutting only after the last label is printed.

Over Print Setting

Over Print is related to multicolor printing with colors that overlap each other. If ON, Over Print prints a base color, then prints the second color on top of the first. If OFF, the printer prints the base color on everything except the items where the second color overlaps. This is preferred in situations where the second color is lighter than the first and you do not want the base color showing through and distorting the color where they overlap.

IMPORTANT! The Over Print option is OFF by default.

Example of when Over Print should be turned ON. (Black is over printing a yellow background.)	Example of when Over Print should be turned OFF. (Black does not print where the red slash intersects the black image.)

Supply Saver Settings

This feature automatically groups labels that are narrower than the tape. It is only used with paneled ribbon and is disabled if using a monochrome ribbon. When this option is selected, the printer recognizes that more labels will fit within an area that can be covered by one panel of ribbon. It then groups the labels together to maximize how many labels will print with that set of ribbon panels. If the option is turned off, only one label prints per ribbon set. This is inefficient if you are printing a number of 2" x 2" labels and have 8-inch long paneled ribbons installed.

IMPORTANT! The Supply Saver option is ON by default.

Change Defaults

1. From the Main Editor, touch **Menu**.
2. Under Systems, touch **Setup** then **Printing**.
3. Touch **Supply Saver Settings** and make your desired selections.

Software for Creating Labels

In addition to creating labels on the printer, you can use labeling software. Install labeling software on your computer or mobile device, set up the connection to the printer, then use the software to design labels and send them to the printer.

Brady Workstation software provides a variety of apps to simplify label creation for specific purposes. It also provides easy-to-use apps for custom label design. The printer comes with a license for Brady Workstation.

- Use the Brady Express Labels app on a mobile device.
- Use Brady Workstation software on a desktop or laptop computer.

Mobile (Wi-Fi and Bluetooth Models Only)

Download the Brady Express Labels app from the Apple® App Store or the Google Play™ store on to your mobile device.

Desktop

Included with the printer is an insert describing Brady Workstation Basic Design Suite along with a link for download.

Brady Workstation software provides a variety of apps to simplify label creation for specific purposes. It also provides easy-to-use apps for custom label design.

To get Brady Workstation software:

1. Make sure your computer is connected to the Internet.
2. Go to www.workstation.bradyid.com.
3. Follow the instructions on the screen to choose the right software for your purpose and download it.

Installing the Windows Driver (Optional)

If you are using the Brady Express Labels app or Brady Workstation software you do not need to install the windows driver. Skip to “Connecting the Printer” on page 12.

If you are using third-party software, you must install the Windows driver. See the Driver Installation Guide PDF file on the USB flash drive that came with the printer.

Connecting the Printer

Connect to a computer in one or more of the following ways:

- Ethernet® network - This method allows multiple computers to send label files to the printer.
- Wi-Fi® wireless network (depending on your printer model).
- Bluetooth® (depending on your printer model).
- Directly with a USB cable.

Ethernet Network

This section describes how to configure the printer to communicate via an Ethernet (TCP/IP) connection.

If using a Windows driver (see "Installing the Windows Driver (Optional)" on page 11") it is best to configure the Ethernet connection before installing the driver. If the driver is already installed before configuring the Ethernet connection, you may need to edit the port settings for the printer in Windows to update the IP address.

1. On the touchscreen, touch **Menu**.
2. Under System, touch **Setup**.
3. Touch **Connection**.
4. Tap **Ethernet Address**.
5. Touch **IP Settings** and choose either DHCP *or* Static.

- DHCP: DHCP addressing is dynamic and the system uses a DNS server in the printer IP address for you. No additional fields need to be entered.
- Static: For static addressing, you must supply the printer's IP address. On the Ethernet screen fill in the following information. You may need to get assistance from your network administrator.
- IP Address: Enter the printer's IP address.
- Subnet Mask: Enter a subnet mask if you are using one.
- Default Gateway: Enter the IP address of the default gateway.
- DNS Server (Primary): Enter the IP address of the primary DNS server.
- DNS Server (Secondary): Enter the IP address of the secondary DNS server.

IMPORTANT! If no DNS server is being used, enter 0.0.0.0 for both the primary and secondary DNS servers.

6. Touch **OK** to accept the changes.

Wi-Fi

Connect to a Wi-Fi network either by searching for and selecting a network or by manually entering the network settings. Once connected, the printer can communicate with computers on that network.

Note: Wi-Fi capability is on select models only and not available in all countries.

IMPORTANT! Before configuring the Wi-Fi connection on an enterprise network, be sure the printer is set to the current date and time. The printer may not be able to establish the connection if the date and time is not current. See "Date and Time" on page 7.

Search to Connect

1. On the touchscreen, touch **Menu**.
2. Under System, touch **Setup**.
3. Touch **Connection**.
4. Tap **Wi-Fi** to enable it. The printer searches for Wi-Fi networks and displays a list of networks found. Touch and drag to scroll the list. (If you need to identify the network by static IP address or DHCP, see "Manually Enter Settings" on page 13.)
5. Select the network that you want to use.
   - If the network is not locked, simply touch it and the printer connects to it.
   - If the network is locked, as indicated by a lock symbol, touch the network and a key pad opens. Enter the password and select OK.

Note: If your network uses WEP authentication, a menu displays instead so that you can enter both the password and the WEP index (key).

- If the network you need is not in the list, it may not be discoverable. Scroll to the bottom of the list and tap Others. Choose either Personal Network or Enterprise Network. The system displays settings appropriate to your selection. You may need information from your IT department to complete the settings.

Manually Enter Settings

Use this method for networks that are hidden.

1. On the touchscreen, touch **Menu**.
2. Under System, touch **Setup**.
3. Touch **Connection**.
4. Select **Wi-Fi** from the list.
5. Touch **IP Settings** and then tap one of the following.
   - DHCP: DHCP addressing is dynamic and the system uses a DNS server to obtain the printer IP address for you.
   - Static: Select static addressing to manually enter the printer's IP address.
6. Touch the **back button** to return to the Wi-Fi screen.
7. Fill in the remaining available settings with help from your network administrator.
8. Tap **OK** to return to the home screen.

Bluetooth

This capability is only available on select printer models. Look for the Bluetooth symbol on your printer to know if this feature is supported.

To connect the printer to a mobile device via Bluetooth:

1. On the touchscreen, touch **Menu**.
2. Under System, touch **Setup**.
3. Touch **Connection**.
4. Select **Bluetooth**.
5. Touch the **checkbox** to enable Bluetooth.
6. From the Express Label Mobile App, select the **More Menu**.
7. Select **Printers**, wait for 10 seconds and watch for the printer [S3700-PGS37xxxxxxx] to appear.
8. Tap on the printer [S3700-PGS37xxxxxxx]
9. Click **Done** after the connection between the printer and Express Label Mobile App is established.

To disconnect Bluetooth from the printer:

1. Touch **Menu**.
2. Under System, touch **Setup**.
3. Touch **Connection**.
4. Select **Bluetooth**.
5. Touch the **checkbox** to disable Bluetooth.

Wi-Fi and Bluetooth Status

To check what, if any, Wi-Fi and Bluetooth connections are established on the printer, follow these steps:

1. Touch **Menu**.
2. Under System, touch **Setup**.
3. Touch **Connection > Status Summary**.

Up to five devices can be connected to the printer at the same time.

USB

To connect to a computer via USB 2.0, plug the provided USB cable into the printer and the computer. Brady Workstation software automatically detects the printer when connected via USB cable.

Note: If you are not using Brady Workstation software, you need to install the printer driver. See the Driver Installation Guide PDF file on the USB drive that came with the printer.

Loading Supplies

Brady labels and ribbons come equipped with smart-cell technology that enables the printer to recognize the type of label and ribbon installed and automatically set many label formatting details.

Installing the Ribbon

Illustrations on the inside of the cover show how to install the ribbon and label supply.

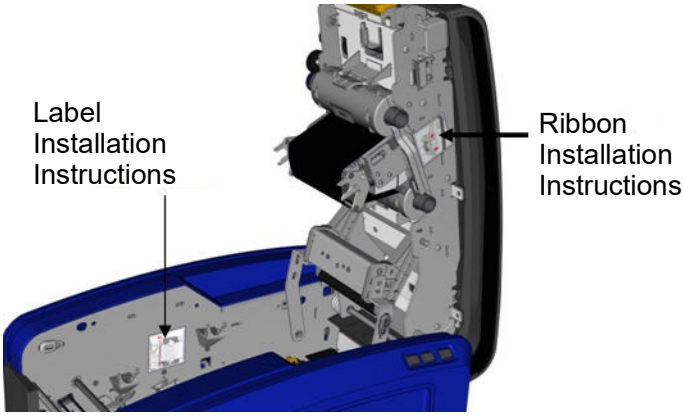

CAUTION! The cover pops open quickly. Place your hand on the cover as you press the latch.

1. Open the cover by pulling up on the bottom of the yellow latch.

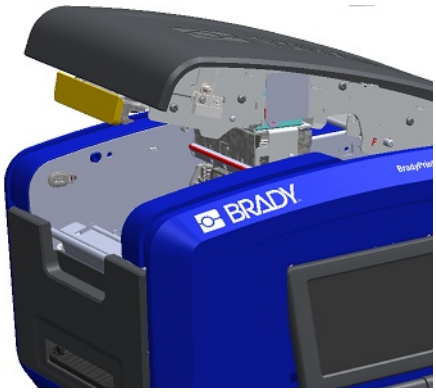

2. With the cartridge tab on top, facing outward, place the exposed ribbon over the printhead, then push the cartridge forward until it snaps into place.

3. Turn the ribbon knob to tighten the ribbon over the printhead.

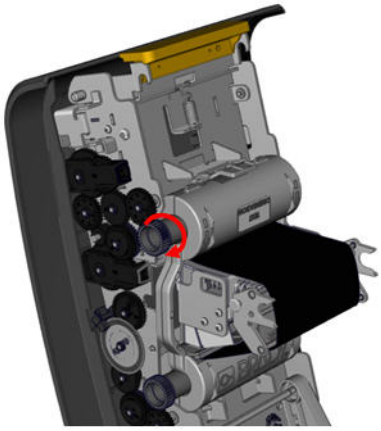

4. Close the cover.

Removing the Ribbon

Open the cover, press down on the ribbon cartridge release tab, grasp the top barrel of the cartridge by the two sides and pull the cartridge straight out from the printhead.

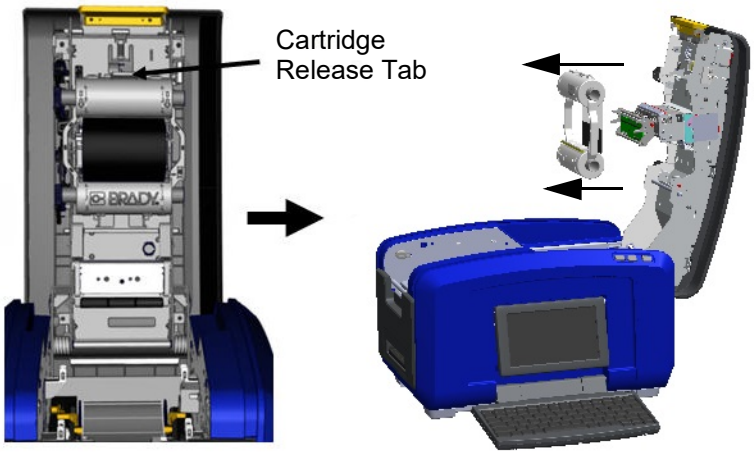

Installing Labels

CAUTION! The cover pops open quickly. Place your hand on the cover as you press the latch.

1. Open the cover by pulling up on the bottom of the yellow latch.

2. Swing the media wiper bar up, out of the tape well.

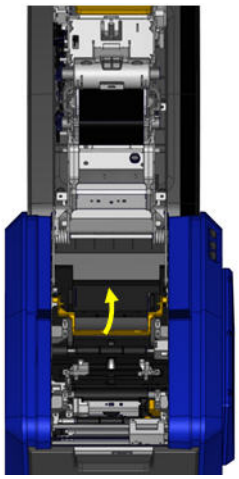

3. Grasp the tape roll with the tape coming off the top of the roll, the smart cell on the left and the tabs on the sides pointing up.

4. Drop the tape roll into the tape well, lining up the touch cell with the touch cell reader.

5. Thread the label tape under and through the media guides, until the tape covers the black roller.

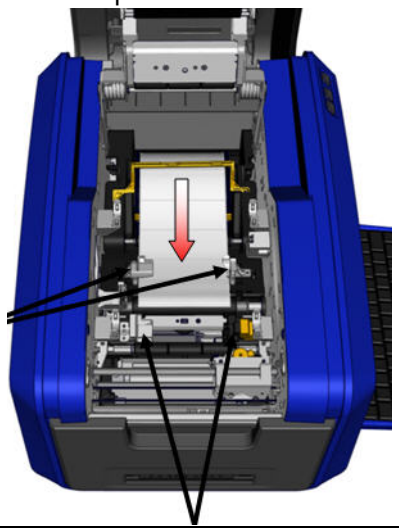

6. Pinch the tape adjustment lever and slide the media guides until they are lined up with the edges of the tape liner.

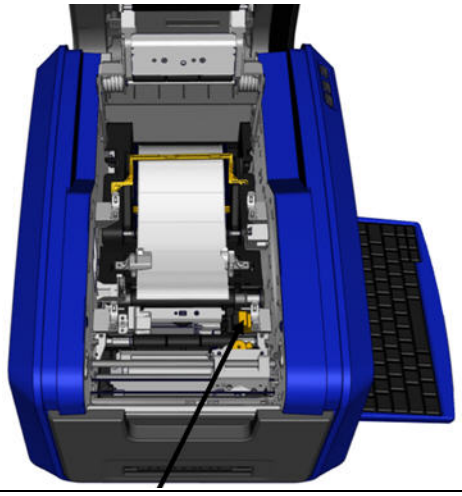

7. If using continuous labels, lower the media bar.

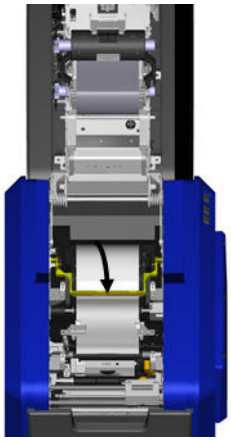

8. Close the cover.

Removing the Labels

1. Open the cover by pulling up on the bottom of the yellow latch.

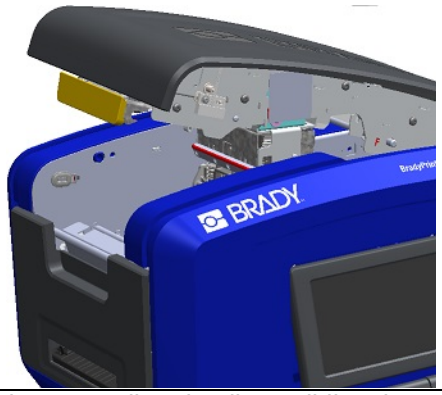

2. If removing continuous media, lift the media wiper bar up off of the tape.

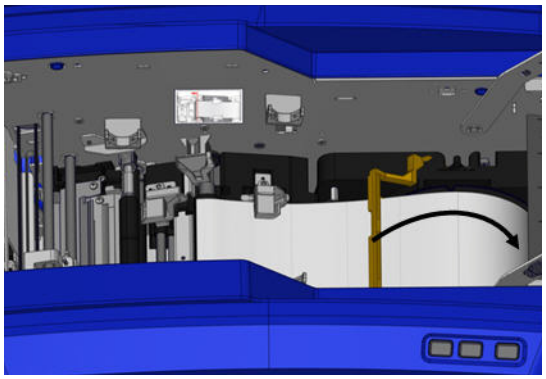

3. Grasp the tape roll and pull up, sliding the media out from under the guides.

Accessories

The following accessories are available for the BradyPrinter S3700 printer and can be purchased separately from your distributor.

- Cleaning Kit
- Soft-sided Carrying Case
- XY Cutter Blades
- Media Wiper Pads
- Stylus
- USB Cable

3 General Operation

Screen Components

The printer uses touchscreen technology. Use your finger to select the desired option on the screen.

Home Page

1. **Home** - Returns you to the Home page from anywhere in the application.
2. **Menu** - Displays File, Label and System options.
3. **Print** - Displays the Print dialog box for printing the current label. If there is nothing in the Editor the print button is grayed out.
4. **Editor** - Text or object entry area. Type, touch or select objects to display and edit in this area. The Editor also shows the color and size of the installed media and ribbon.
5. **Control Panel** - Primary area for selecting options for creating, editing and working with labels and objects. The panel changes depending on what option is selected.
6. **Status Bar** - Shows the current label size and indicators for the amount of label supply and ribbon remaining.
7. **Tools Panel** - Provides additional options for the specific tool selected. The Tools panel changes according to the object selected.

Menus

Menus provide access to controls, such as file, label or system functions. Press the Menu button on the Home screen to display the three main menu categories.

File		Label		System	
New File		**Size & Orientation**		**Setup**	
Open File		**Frame**		**Information**	
Save File		**Templates**		**Import**	
Delete File				**More Tools**	

Dialog Boxes

A dialog box contains various options for the specific sub-menu that you selected. It may contain one or combination of a pull-down menu, spinner box, data field, options box and scroll bar. A dialog box enables you to make a number of changes to the label at one time.

Touch OK (sometimes called Finish depending on the dialog box) to accept the edits and close the dialog box.

Touch Cancel to remove the edits and leave the dialog box.

Pull-Down Menu and Spinner Box

Pull-down menus have a single arrow. Clicking it will show additional options.

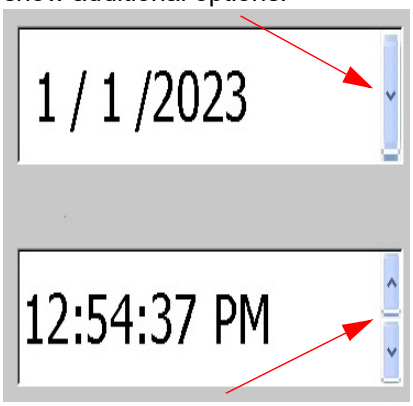

A spinner box has two arrows. The up arrow will increase values and the down arrow decreases values.

Text Fields

Enter data in text fields by touching the white box and entering the information with the keyboard. Some text fields will have a blinking cursor indicating that information is needed. Other text fields are pre-filled and may be highlighted; both can be overwritten with user defined values.

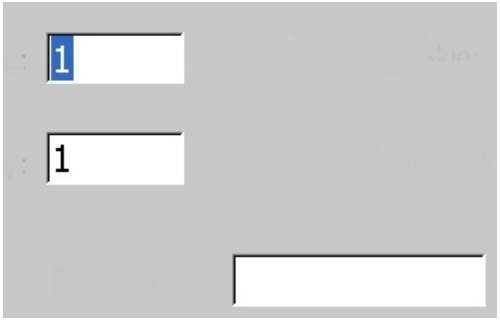

Option Boxes and Scroll Bar

Touch an option box to select or deselect the choice. Selected options will show a checkmark in the box. Some option box choices are connected to higher level choices for which the sub-choices are not available (grayed out) if the higher level choice is not selected.

If more choices are available than what is displayed, a scroll bar to the right of that option area allows you to scroll through the options. Touch the up or down arrow in the scroll bar, to move through the list of choices. A greyed out scroll arrow indicates that the top or bottom of the list has been reached.

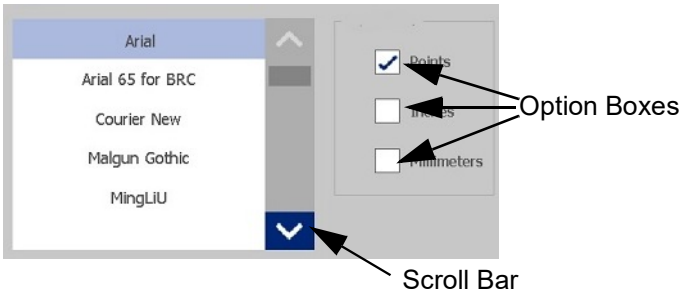

Touch OK (sometimes called Finish depending on the menu or dialog box) to accept the edits and close the window.

Touch Cancel to remove the edits and leave the dialog box. Cancel may need to be touched a number of times to back out of all options.

Creating a Simple Text Label

Creating your first label is as easy as starting to type! You don't need special software and you don't have to be connected to a computer to create or print labels.

This section describes the process of creating a text label with minimal formatting, using basic editing techniques, and printing the label. For more detailed information, see "Formatting Labels" on page 24.

1. Be sure the ribbon and labels are loaded and the power is on.

   When the printer is first turned on, you are presented with the Home page, displaying a blinking vertical bar (the cursor) and the message "Type or touch here..."
2. Type the desired text.

   The text displays on the screen, surrounded by a frame. The frame indicates you are working with a text element. (See "Text Elements" on page 30.)
3. Press the **ENTER** key on the keyboard to start another line of text.
4. If you wish to insert, delete, or format text, do so now.
5. When you are ready to print, touch the **Print** icon on the screen.
6. Enter the number of copies and touch **Start Printing**.

4 Formatting Labels

Formatting refers to the layout, structure, and appearance of a label. Each label contains elements that represent user content, such as text, barcodes, etc. This chapter provides information on editing and formatting tasks.

Elements

Different elements that can be used on a label include the following:

- Text
- Serial Data
- Date and Time
- Barcodes
- Graphics (Pictures, symbols, and shapes)

The options displayed in the Add Object Control Panel depend on which element is selected. These options are common to all.

Icon	Function
	Deletes an element from the label. Touch the element for removal and touch the Delete icon on the screen.
	The Undo function puts the element and/or label back to the state it was in before the last action was taken. Undo can be pressed multiple times to keep undoing previous actions.
	Changes the size (height and width) of the element. Touch the element to select it. Touch the Size icon and use the arrows by dragging your finger on the screen. Alternatively, you can manually increase or decrease the size of your selected element by using the plus (+) and minus (-) icons.

Icon	Function
	The Rotation button displays along with the size arrows on an element. Each time the Rotation button is touched, the element rotates 90° counter-clockwise (to the left). Touch the element to select it. Touch Size, then touch Rotate. **Note:** When rotated, the text font will be reduced so that the entire text box fits on the label. The font size will stay reduced even if the object is rotated back to its original position (a full 360°).
?	Help provides context sensitive instructions on how to use the various options available for the different elements. Touch the element for which more information is needed and touch the Help icon.
	Zoom increases or decreases the view. It does NOT change the size of the element itself. Repeatedly touching the icon will continue to increase or decrease the magnification.

Adding an Element

To place an element on a label:

1. Touch a blank area of the label where you want to insert an object.
   The Add Object portion of the Control Panel displays.
2. Touch the desired element.
   A bounding box will appear around the element letting you know that it is active.

Formatting an Element

In order to format, edit, size, or move an element it must be selected. Selecting an element places the focus on the element, enabling formatting functions to be performed *only* on that element.

To select an element:

Touch the element you want to work with. A border displays around the element, indicating that the element is selected.

To remove the border (deselect the element):

Touch a different element or anywhere else on the screen.

Moving an Element

To move an element to a different location on a label, either drag the element on the touchscreen or use the keyboard arrows. Holding down the Shift key while pressing an arrow will move the element in larger increments.

If you drag an object off the edge of the displayed part of the label (but still within the label boundary), the display automatically scrolls so the object stays visible.

If you move an object so that some or all of the object is outside the printable area, the object repositions within the label boundary.

Note: For text elements, the main text editing control panel cannot be displayed if you want to move the text element using the keyboard. If the main text editing control panel is displayed, using the keyboard moves the cursor within the text line. To use the keyboard to move a text element to another position on the label, touch More Options one time. This moves the text element off of the main text editing control panel. You can now use the keyboard to move the text element.

Zooming an Element

To view label text in larger or smaller increments, use the Zoom controls in Tools.

1. To enlarge the label view, touch Zoom In button as many times as needed to increase to the desired size of the view.
2. To decrease the label view, touch Zoom Out button as many times as need to decrease to the desired size of the view.

Note: Zooming in or out only increases or decreases the size of the view. It does not change the size of the printed text.

Aligning an Element

Elements can be aligned on a label in three different ways.

Icons	Function
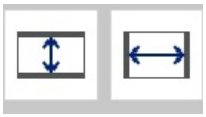	Centered horizontally or vertically.
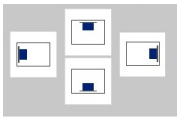	Aligned with the top, bottom, left or right edge.

Center on Label

The Center on Label buttons center the selected element vertically or horizontally to the boundaries (margins) of the label, not to other elements.

To center an element on a label:

1. Touch the **element** to be centered.

   A bounding box will appear around the element letting you know it is selected.
2. Touch the **Right Arrow** button under More Options until the Center on Label buttons are displayed.
3. Touch the desired (vertical or horizontal) **Center on Label** button.

Align to Edge

The Align to Label Edge buttons align the selected element to the left, right, top or bottom edge of the label. Only the alignment options relevant to the element are available. For instance, if an element is already aligned to the top of the label, the top alignment button is grayed out.

To align an element to the label:

1. Touch the **element** to align.
2. Touch the **Right Arrow** button under More Options until the Align to Label Edge buttons are displayed.
3. Touch the desired available **Align to Label Edge** buttons.

Exact Size & Position

The alignment buttons place an element at an approximate location on the label. For precise placement of an element on a label, use the Exact Size & Position button to specify the exact location. The measurements are recorded in inches or millimeters, depending on what you have set as the default unit of measure.

To precisely place an element on the label:

1. Touch the **element** to be aligned.
2. Touch the **Right Arrow** button under More Options until the Exact Size & Position button displays.
3. Touch the **Exact Size & Position** button.
4. Touch the appropriate data fields and enter the desired size or position.
5. When finished, touch **OK**.

Note: If the values entered result in the object being positioned outside the printable area, the system resizes and repositions the object to fit on the label.

Framing an Element

A printable frame (border) can be added to an individual text element or graphic element. You can have a different frame, or no frame, on individual elements in a multi-element label. You can also place a frame around all elements on the entire label. (See "Framing a Label" on page 63.)

Add Frame

To add a frame to a text or graphic element:

1. In the Editor, touch the text element you want to frame.
2. In the Control Panel, in More Options, touch left or right arrow to reach the Object Frame screen.
3. Under Shape, touch the desired frame shape, Rect. or Rounded.

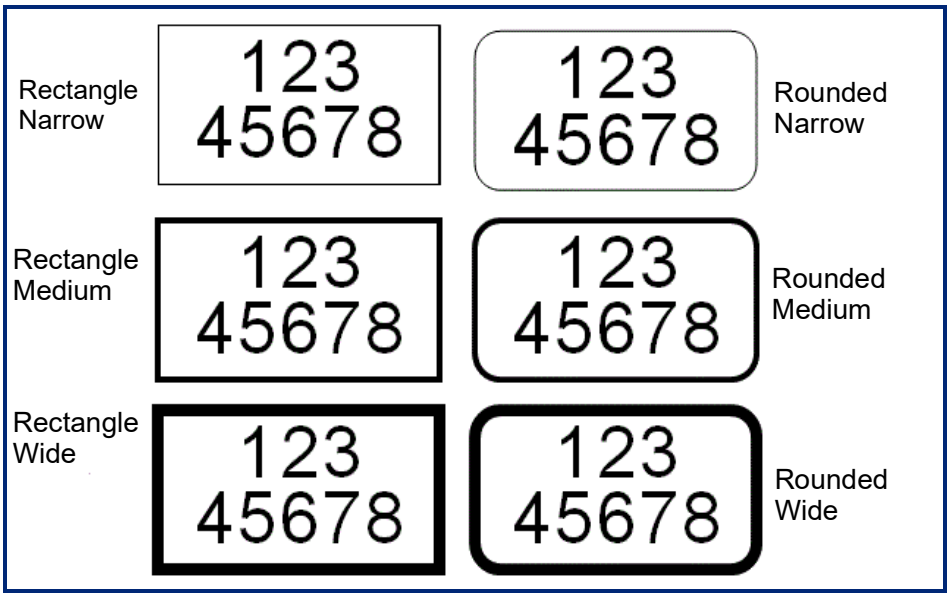

4. Under Line Width, touch the desired width of the frame lines, Narrow, Medium, or Wide.

Remove a Frame

To remove a frame from an element:

1. Touch the element whose frame you want to remove.
2. In the Control Panel, in More Options, touch left or right arrow to reach the Object Frame screen.
3. Under Shape, touch None.

Coloring an Element

The color of the data in each element (text, barcode, graphic, etc.) can be changed, depending on the color of the ribbon installed. A full color ribbon provides a greater palette of colors to use.

Note: The colored square with the embedded ribbon icon indicates the colored ribbon you currently have installed in the printer. If you do not have the selected color ribbon installed, a message prompts you to install the specific color ribbon before printing.

To change the color:

1. Touch the **element** containing the data on which you want to change color.
2. In the element's main control panel screen, touch the **Color icon** (four colored squares).
3. On the Choose the Object Color screen, touch the desired color.
4. Touch **OK**.

Scrolling

The Editor supports horizontal and vertical scrolling when displayed elements do not fit the display area.

To view hidden parts of a label:

1. Touch a scroll arrow to scroll in the direction you want to view.

   The ruler value updates automatically as the label view changes. If the entire label is shown on the display, no scroll arrows display.
2. Continue to touch the scroll arrow as many times as needed to scroll in the direction you want. You can hold the scroll arrow down to continuously scroll.
3. To return to normal viewing mode, touch the scroll arrow(s) in the opposite direction until the label contents are in view.
   OR
   Touch Zoom Out enough times to bring all the label contents back in view.

Copying and Pasting

Cut down on time by copying and pasting repetitive information.

To copy and paste:

1. On the screen, touch the object (Text, Graphic, Barcodes, Symbol, etc) to be copied.

   A bounding box will appear around the object selected.
2. Press the Ctrl and C keys on the keyboard to copy the object.

Note: To select <u>all objects</u> on the screen, press the Ctrl and A keys on the keyboard.

3. Press the Ctrl and V keys on the keyboard to paste all selected objects to the right of the selected objects.

Note: Pressing and holding the Ctrl key will select or deselect objects on the Main Editor.

Text Elements

Text elements contain user-defined text and characters, allowing direct data entry on the label. Only alphanumeric characters can be used in a text element. Text elements can be single or multi-line, however the text element does not “wrap¨ text (i.e., automatically start a new line when the label boundary has been reached).

Adding Text

The Home page contains the Editor which is where the label is created. The Editor automatically starts in text mode, designated by the message “Type or touch here...”. You can immediately start entering data, directly over the displayed message. A bounding box displays around the text as it is being entered. This box represents the text line. For a multi-line text entry, press Enter on the keyboard to start a new line of text in the same text element.

To add an additional text element to a label:

1. Touch the Editor screen outside the current text element.
2. In the Add Object control panel, touch the **Text** icon.

OR

1. From anywhere on the Editor touch the Add Object icon.
2. Touch the **Text** icon.
3. Enter the text.

   A blinking cursor displays inside the text element. The text element’s bounding box extends as text is entered.

To add another line of text in the same text element:

4. Press **Enter**.

When finished entering the text, touch anywhere on the screen to remove the text line borders.

Selecting or Deselecting Text

Function	Option	Description
Select a Word	Touchscreen	In the text box, touch the word to highlight.
Select multiple words	Ctrl + A	To select all text on the screen, press the Ctrl and A keys on the keyboard. NOTE: Any object types on the screen will also be selected using this function.

Function	Option	Description
Select characters	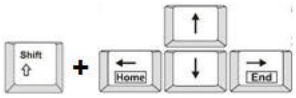	To select characters, hold the Shift key while pressing the arrow key in the direction you want to highlight.
Select characters to beginning of text		To select text from the position of the cursor to the beginning of all lines of text, hold the Shift key while pressing the FN and Home keys.
Select characters to end of text		To select text from the position of the cursor to the end of all lines of text, hold the Shift key while pressing the FN and End keys.
Select all characters		When inside the text box, touch Select All Characters. All text in the text box is highlighted.
Deselect a Word	Touchscreen	If a word is highlighted, touch the word again to deselect. The highlighting is removed.
Deselect all but one word	Touchscreen	To deselect all highlighted words EXCEPT one word, touch the word that you want to keep highlighted. All other highlighted words deselect.
Deselect all highlighted words		Hold the Shift key and touch anywhere in the highlighted words. All words are deselected.

Inserting Text

To insert additional text within a line of text:

1. Touch the screen or use the navigation arrows on the keyboard to position the cursor at the point where text should be inserted.
2. Enter the text.

   Existing data positioned to the right of the cursor moves progressively to the right to make room for the inserted text.

- If a fixed font size is selected, when the end of the line is reached, no more data can be inserted. To add more data, either press ENTER on the keyboard to start another line of text or decrease the font size.
- If the font size is set to Auto, as more data is added to a line of text, the font size automatically decreases a point at a time until the smallest font size is reached. When the maximum character limit is reached an error message displays. To remove the error message, press ENTER or tap the error message screen. (See "Autosizing Fonts" on page 35.)

Deleting Text

There are two methods for deleting text, both of which are found on the keyboard.

1. To remove characters, one at a time, from the position of the cursor TO THE LEFT (backwards), press the Backspace key.
2. To remove characters, one at a time, from the position of the cursor TO THE RIGHT (forward), press the Delete (Del) key.

Note: If multiple words are highlighted, pressing Backspace or Del deletes all the highlighted text. (See "Selecting or Deselecting Text" on page 30 for options on selecting text.)

Replacing Text

Change text without having to delete it first.

To replace text:

1. Select the text that should be changed.

   The text highlights.
2. Enter the new text directly over the highlighted text.

Clearing Text

To clear all text from the text box, with the text box selected (the frame is visible):

1. In the Control Panel, touch **Select All Chars**.
2. On the Keyboard, press the Backspace or Del key to delete highlighted text.

To delete all text and remove the text box,

3. Touch **Delete**.

Font

The printer comes loaded with different fonts or typefaces. If a font is not available on the printer, it can be imported. Font attributes change the appearance of the fonts, such as size, weight (bold), angle (italics), underline, and expanding or condensing the text. Special characters, such as the degree symbol, are also available on the printer.

When you add a text element, the text defaults to the font defined in System Setup.

Icon	Function
Abc	**Font** opens the font menu, to choose a font or apply an attribute.
B	Applies **boldface** to the selected text.
I	**Italicizes** the selected text.
U	**Underlines** the selected text.
	Opens the **Import menu** to import fonts and graphics.
ß,¥	Opens the **Special Characters** menu.
	Left justification. All text lines up on the left margin.
	Center justification. All text is centered within the boundaries of the text element.
	Right justification. All text lines up on the right margin.
A B C	Changes horizontal text to **vertical text**.

Icon	Function
	Applies or removes **reverse formatting**.
	Expands text.
	Condenses text.

Changing Fonts

You can change the font for the entire text element on a specific label or on just a few characters within the text element.

To change the font:

1. In the text element, **select the text** (characters, words, or entire text) on which to change the font.
2. In the Control Panel touch the **Font** icon.
3. In the list of available fonts, touch the desired font.
4. Touch the **Size:** data field and enter the desired point size for the selected font.
5. Choose whether to bold, italicize or underline the text element.
6. When finished, touch **OK**.

Importing Fonts

Import your own fonts using a USB drive.

Note: Only True-Type fonts can be imported.

To import fonts:

1. Copy the fonts to import into the root directory of a USB drive.
2. Plug the USB drive into any available USB port on the printer.
3. On the printer, touch the **Menu** button.
4. Under System, touch the **Import** icon.
5. Touch the **Fonts** icon.
6. Under External USB:, touch the font file name that you want to import.
7. Touch the **Import** icon.
8. When ready, touch **OK**.

If there is not enough space available to store the imported font(s), you will have to clear some space on the printer before you can import any new fonts. You can clear space by deleting saved files. There is approximately 56MB of storage space available.

Autosizing Fonts

Font size can be applied to a single character, a word, or a line of text. If the size is changed before the data is entered, all the data in the current and subsequent lines takes on the new font size until the size is changed again.

The amount of text a label can hold depends on the label supply being used and the label length setting. The printer automatically adjusts the size of the font as data is entered. When text reaches the label boundaries, it scales downward until you press ENTER or the minimum font size is reached. When working with autosize and multiple lines of text, all lines on a label maintain the same text size.

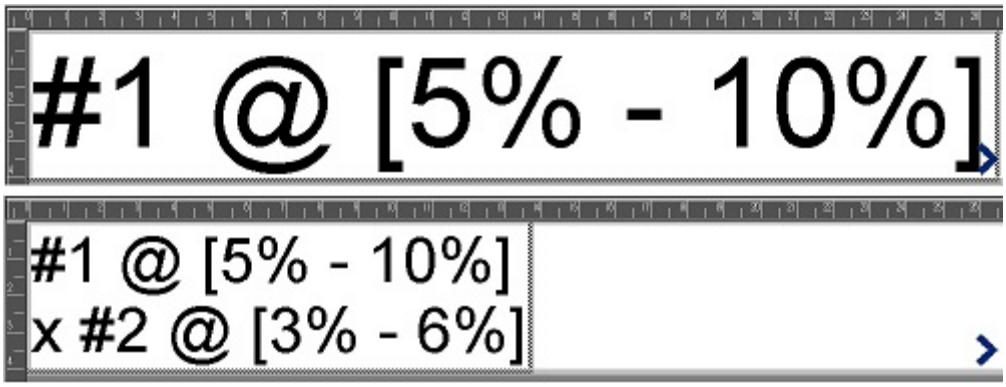

Changing Text Box Size

In addition to autosizing text to fit the label, you can adjust the size of the text box. Vertically changing the size of the text box decreases the font size. Horizontally changing the size of the text box expands or condenses the text. (See "Expanding or Condensing Text" on page 41.)

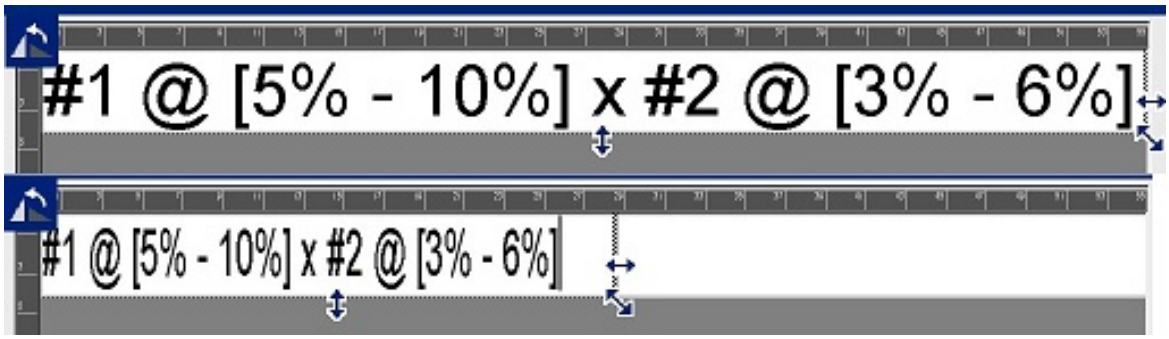

To change the size of the text box:

1. With the cursor in the text box, from Tools, touch Size icon.

   A left/right, up/down, and diagonal arrow display on the text box.
2. To increase or decrease the height of the text box, touch the up/down arrow and drag your finger down or up on the screen.
3. To increase or decrease the length of the text box, touch the left/right arrow and drag your finger right or left on the screen.
4. To increase or decrease the height and length of the text box at one time, touch the diagonal arrow and drag your finger diagonally on the screen.

Adding Special Characters

There are some characters that are not available on a standard keyboard, such as the degree or copyright symbol, accented characters in different languages, fractions, etc. The printer provides many of these symbols for use in text elements.

Note: The available characters depend on the font in use.

To add a special character in the text element:

1. Position the cursor in the text element where the special character is to be placed.
2. Touch the **Special Characters** icon.

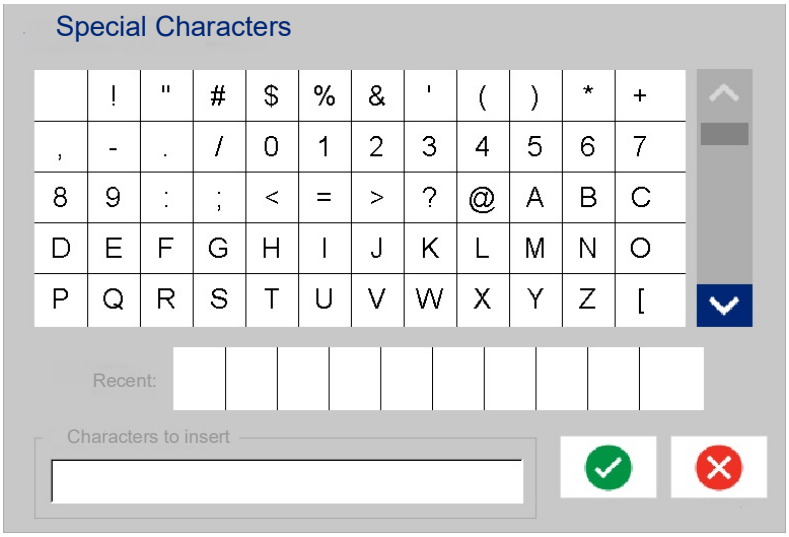

3. On the Special Characters screen, touch the scroll arrows to move through the list of available characters.
4. Touch the character(s) you want to enter. (You can select more than one character at a time.)

   The selected character(s) immediately display in the Characters to insert area at the bottom of the screen. You can also type in the Characters to Insert area.

Previously used special characters are displayed in the Recent: field. These characters remain in the Recent: field as long as the printer remains turned on. To re-use these characters:

5. In the Recent: field, touch the desired character.
6. When finished touch **OK**.

   The special character displays at the indicated position in the text element.

Accented Characters

As with standard PC keyboards, each character key supports multiple characters when used in combination with the **<Shift>** and **<Alt Gr>** keys.

Keycaps show characters in one of four positions (see figure on the following page). The character position on the physical key indicates how to access the characters with the **<Shift>** and **<Alt Gr>** keys.

Characters that require two keystrokes are not differentiated in any way, however, they respond differently when selected. For example, when an accented character is typed, it does not display until the letter to be modified is also typed. The accented character is then displayed with the letter.

Example 1 shows how to access characters in normal operation (caps lock and Alt-GR keys not activated).

Example 2 shows how to access characters when caps lock is on.

Example 3 shows how to access characters using the Alt-GR key.

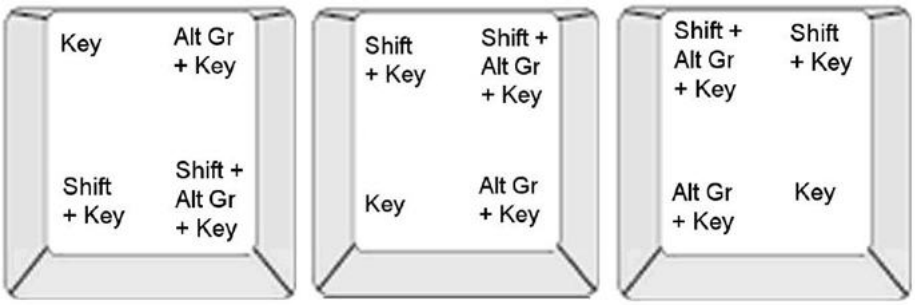

Example 1 Example 2 Example 3

Understanding Keystroke Combinations

- The term “Key” represents the physical key on which the accent character is located.
- The Alt-GR key is also referred to as the “switch” key.
- The “+” sign indicates that two or more keys should be pressed simultaneously.
- A comma separating a keystroke combination indicates that the first set of keys should be released before typing the next keystroke combination.

Typing Accented Characters

Typing the key combinations may vary depending on the keyboard configuration you are using. The following shows an example of using each of the four key combinations.

Note: See “Character Mapping & Keyboard Layouts” on page 131 for a list of accent characters available with specific keyboards and the keyboard configurations.

To type an accented character:

1. On the keyboard, locate the key with the accented character you want applied.
2. Type the appropriate keystroke combination. The tables below show example keystroke combinations.

Note: The following tables show an example of North American QWERTY and European QWERTY keystroke combinations.

North American QWERTY Key Combination Example		
Result	**Accent Key**	**Keystroke Combination**
ç	Cedilla	**Lower Case**: Alt Gr + Key **Upper Case**: Shift + Alt Gr + Key
ô à	Circumflex Grave	**Lower Case**: Shift + Alt GR + Key, Letter **Upper Case**: Shift + Alt GR + Key, Shift + Letter
é ñ	Acute Tilde	**Lower Case**: Alt-GR + Key, Letter **Upper Case**: Alt-GR + Key, Shift + Letter

North American QWERTY Key Combination Example		
Result	**Accent Key**	**Keystroke Combination**
ä	Diaeresis (umlaut)	**Lower Case**: Shift + Key, Letter **Upper Case**: Shift + Key, Shift + Letter
å	Ring	**Lower Case**: Alt + Key, Letter **Upper Case**: Alt + Key, Shift + Letter

European QWERTY Key Combination Example		
Result	**Accent Key**	**Euro QWERTY Keystroke Combination**
ç	Cedilla	**Lower Case**: Alt Gr + Key, Letter **Upper Case**: Alt Gr + Key, Shift + Letter
ô à	Circumflex Grave	**Lower Case**: Alt + Key, Letter **Upper Case**: Shift + Key, Shift + Letter
é	Acute	**Lower Case**: Shift + Key, Letter **Upper Case**: Shift + Key, Shift + Letter
ñ	Tilde	**Lower Case**: Shift + Key, Letter **Upper Case**: Shift + Key + Letter
ä	Diaeresis (umlaut)	**Lower Case**: Shift + Key, Letter **Upper Case**: Shift + Key, Shift + Letter
å	Ring	**Lower Case**: Alt + Key, Letter **Upper Case**: Alt + Key, Shift + Letter

Text Justification

Justification refers to the horizontal alignment of data between the left and right boundaries (margins) in a text element. Justification applies to the entire text element. It cannot be applied line-by-line. To align the text element on the label, see “Aligning an Element” on page 26.

To apply justification:

1. Touch the **text element** where justification is to be applied.
2. In the Text Control Panel, above More Options, touch the **right arrow**.
3. Touch the desired **horizontal justification**.
   Every line of data in the text element is justified according to the option selected.

Vertical Text

In Vertical text, each character drops down a line below the preceding character.

The word “WIRE” as vertical text displays as such:

W
I
R
E

Vertical text can only be applied to an entire text element. It cannot be applied line-by-line.

To format text vertically:

1. Touch the **text element** you want to display vertically.
2. In the Text Control Panel, above More Options, touch the **right arrow**.
3. Touch the **Vertical icon**.

   The word(s) display vertically on the label.

If more than one line of text is present, the second and subsequent lines of text display vertically beneath each other. In order for the text to fit on the label, the font size automatically decreases.

Note: Once text has been sized to fit vertically, selecting Vertical again does not change the text back to the original size. While the text is again displayed horizontally, you have to manually change the text size back to its original setting.

Reverse Formatting

The Reverse function switches the foreground and background colors of data on a label, based on the media installed.

Text before reverse applied	Text after reverse applied

For instance, black lettering on a yellow background, if reversed, would print yellow lettering on a black background.

Reverse formatting is applied to the entire text element. It cannot be applied to an individual line of text.

To apply Reverse formatting to a text element:

1. Touch the **text element** you want to display in reverse coloring.
2. In the Text Control Panel, above More Options, touch the **right arrow**.
3. Touch the **Reverse icon**.

   The system formats the data so that the foreground and background colors are switched.

To remove the reverse function touch Reverse again.

Expanding or Condensing Text

Expanding and condensing text affects character width and the spacing between characters in a word. Text can be expanded or condensed according to predefined percentages, 50% to 200% in 10% increments. If the limits are reached, the Expand/Condense buttons have no further effect.

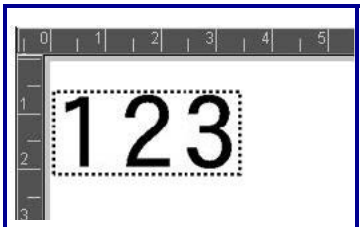	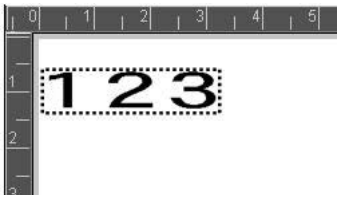	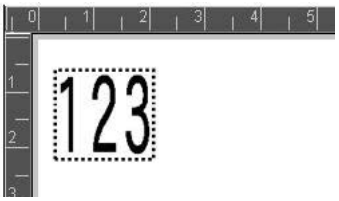
Standard	Expanded	Condensed

To Expand or Condense text:

1. Touch the **text element** you want to expand or condense.
2. In the Text Control Panel, above More Options, touch the **right arrow**.
3. Touch Expand or Condense icon, as desired.

Each time Expand or Condense is touched, the data in the text element is expanded or condensed incrementally. You may have to touch Expand or Condense a number of times to achieve the desired size.

Serial Object Elements

Serialization lets you create labels that contain number or letter sequences that print as multiple labels at print time. Serialized data can even be incorporated into a barcode.

Serialization (or sequencing) automatically adds a series of sequential numbers or letters to the printed labels. The Serial function consecutively places the next number or letter in the defined sequence on individual labels. The number of labels created is defined by the sequence values you enter. You can view the serialized labels before they print through the Print Preview function. (See "Print Preview" on page 54 for more information.)

Serialization can be combined with other data on a label. Any data displayed on a label that includes serialization will be repeated on every label along with the serial data.

How Serialization Works

Serialization consists of a Start Value, End Value, and Increment (Change by). The Start Value is the number, letter, or combination of numbers and letters that begin the serialization sequence. The End Value is the termination point of the sequence.

The increment (Change by) is the value that is added to the previous number in the sequence to produce the next sequence number. (You cannot have an increment value of 0.) For instance, a start value of 1, an end value of 25, and an increment (Change by) of 4 would produce 1, 5, 9, 13, 17, 21, 25.

To add a serial object:

1. Touch anywhere in the Editor, OR if you are already in a label, touch Add Object.
2. In the Add Object control panel, touch **Serial & Date/Time**.
3. In the Serial & Date/Time dialog box, touch either Serial Text *or* Serial Barcode, depending on what you want to serialize.

Note: A serialized barcode places the serialized data in barcode format on the label.

4. In the Serial dialog box, touch the **Starting value: data field** and enter the starting value of the data to be serialized.
5. Touch the **Change by: data field**, and enter the increment by which you want the serialized data to advance. You can use positive or negative values.
6. Touch the **Ending value: option box**, then enter the ending value of the serialized data in the Ending value: data field.

   OR

   Touch the **Total number: option box**, then enter the total number of labels you desire.

Note: You can either enter the ending value or the total number of labels desired. You can not use both. If you choose ending value, the system automatically calculates how many labels to print to accommodate the entire serialization. The total number of labels to be printed is reflected in the grayed out Total number field. If Total number is used, the serialization progresses until the total number of labels is reached.

If you want to add constant, uniform text before or after the serialized data, use Prefix (for text displaying before the serialized characters) or Suffix (for text displaying after the serialized characters). To add a Prefix and/or Suffix (you can use both):

7. Touch **Before serial: data field**, and enter the data that will display before the serialized data.

   OR

   Touch **After serial: data field**, and enter the data that will display after the serialized data.
8. When ready, touch **OK**.

Date/Time Object Elements

The Date/Time object places a time stamp on the label, in text or barcode format. You can add a date, time, or date and time combined.

To add a date/time object:

1. Touch anywhere in the Editor, OR if you are already in a label, touch Add Object.
2. In the Add Objects panel, touch **Serial & Date/Time**.
3. In the Serial & Date/Time dialog box, touch either **Date/Time Text** *or* **Date/Time Barcode**, depending on how you want the date and time to display.

In the Date/Time dialog box, the default is to include the date AND the time (the Include date and Include time option boxes are already selected. If you want ONLY the date or Only the time:

4. Touch the option box of the item you DO NOT want on the label. This removes the checkmark.

To include the date, under Date format:

5. Use the up/down arrows in the scroll bar to the right of the date formats to view different date formats.
6. Touch the **date format** to include on the label.

To include the Time, under Time format:

7. Touch the **time format** to include on the label.
8. Under Hour format, touch the **clock format** to use 12 hour or 24 hour.

So far you have just been able to select the date and time format. The system will stamp the current date and/or time on the label in the formats you choose. However, to change the date and/or time to something other than the current date and time, change the Clock Settings.

9. In the Date/Time dialog box, touch **Clock Settings**.
10. Follow the procedures for “Date and Time” on page 7 to change the settings.
11. When finished changing the date and time settings, touch **OK** to exit the Clock Settings dialog box.
12. Touch **OK** again to exit the Date/Time dialog box and place the date and/or time on the label.

Note: When printed, the date/time value of each label will reflect the current date and time when printing.

Barcode Object Element

A Barcode element represents a barcode graphic generated from user input. Barcodes are generated following industry standard symbology. A typical barcode is composed of vertical lines (bars) and spaces of varying thickness, depending on the text entered. It can also include “human readable text.” Human readable text is the data entered that makes up the barcode. Because you cannot read bars and spaces, you can have the actual text that makes up the barcode display.

Barcode elements support vertical resizing (height) only. The width of the barcode is based on data and symbology and cannot be changed. However, some barcode widths (depending on symbology used) can be altered by changing the ratio and density of the bar code. (See *page 45* for information on ratio and density.)

Barcode data can be displayed in the same line as other data (text or symbols). It is not necessary to have a separate area for the barcode. Barcode data on the same line as text will not overwrite the text already on the line but will be placed next to it.

Like other object elements on the printer, barcode elements can be positioned, aligned, and rotated.

Note: To get better quality barcode print outs, reduce the printer speed. (See “Print Speed” on page 56.)

Add a Barcode

To add a barcode to a label:

1. Touch anywhere in the Editor, OR, if you are already on a label Touch **Add Object**.
2. In the Add Object control panel, touch **Barcode**.
3. In the Barcode dialog box, under Symbology, use the up/down arrows in the scroll bar to the right of the barcode symbology to access more barcode types.
4. Touch the desired **barcode type**.
5. Touch the **Data value:** field and enter the data the barcode represents.

Note: If a typed character is invalid for the active symbology, the typed character does not display. The cursor remains in the position (does not move forward) until a valid character is entered.

6. Select **OK**.

Change Barcode

To change the type of barcode after the barcode is established:

1. In the Editor, touch the **barcode element**.
2. In the Barcode control panel, touch **Change Barcode**.
3. In the Barcode dialog box, touch the desired **barcode type** and change any of the barcode data as necessary.
4. When ready, touch **OK**.

Size

Sizing the barcode affects only the height (vertical length) of the barcode, from top to bottom. To increase or decrease the height of the barcode:

1. In the Editor, touch the barcode element.
2. In the Barcode control panel, touch Plus to increase the height or touch Minus to decrease the height.

Note: The font type and size affects the height of the barcode. The barcode and the human readable text must fit in the frame of the barcode element. As the size of the human readable text increases, it decreases the height of the barcode.

Ratio

Ratio indicates the ratio of bar height to symbol length. Not all barcode symbology allows you to change the ratio. If you are using a symbology that does not support this option (i.e., QR Code (2D) or PDF417 (2D), the Ratio buttons do not display. For those that do support it, to change the ratio:

1. In the Editor, touch the barcode element.
2. In the Barcode control panel, touch the ratio button desired.

Density

Density refers to the thickness of the bars and spaces within a barcode. To change the density:

1. In the Editor, touch the **barcode element**.
2. In the Barcode control panel, touch the **Density button**.
3. In the Density dialog box, touch the desired density button.
4. Touch **OK**.

Human Readable Text

Human readable text is the data entered that makes up the barcode. Because you cannot read bars and spaces, you can display the actual text that makes up the barcode.

To display Human Readable Text:

1. In the Editor, touch the barcode element.
2. In More Options, touch the right arrow.
3. Next to Human Readable Text, touch the button that displays where you want the human readable text to display (above the barcode or below).
4. If you do not want human readable text to display, touch None button.

Font

To change the font of the human readable text:

1. In the Editor, touch the **barcode element**.
2. In More Options, touch the **right arrow**.
3. Under Human Readable Text, touch **Font**.

4. Under Available fonts, touch the up or down arrow in the scroll bar to display more fonts.
5. Touch the **desired font**.
6. Touch the **Size:** data field and enter the desired size of the font.
7. Touch the desired attribute to use (Bold, Italic, or Underline).
8. When finished, touch **OK**.

Check Digit

A check digit is used for error detection in a barcode. It consists of a single digit computed from the other digits in the barcode.

To include a check digit character in your barcode:

1. In the Editor, touch the **barcode element**.
2. In More Options, touch the **right arrow**.
3. Touch the **Include check character option box** to place a checkmark in the box.
4. To have the check character display with the barcode, check Readable check character option box.

Note: The Readable check character option box is only available when the Include check character option box is checked.

Start/Stop Code

Most barcodes contain a Start and Stop code signifying, in a line of text, where the barcode starts and ends. The most common Start and Stop code is an asterisk (*), although some barcodes required an opening and closing parenthesis ( ).

To view the start and stop code currently assigned to your barcode symbology:

1. In the Editor, touch the **barcode element**.
2. In More Options, touch the **right arrow**.
3. Touch the **Readable Start/Stop (*) option box** to place a checkmark in the box.

   The Start/Stop code displays with the readable text in the barcode element.

Graphic Object Elements

Use the graphic object to place pictures, shapes, or signs on your label.

To add a graphic object element:

1. Touch anywhere in the Editor, OR, if you are already in a label touch Add Object.
2. In the Add Object control panel, touch Graphic.
3. In the Select Graphics dialog box, under Category, touch the category containing the graphic you want to add.
4. In the displayed list of graphics, touch the desired graphic.

   The graphic is added to the label.

Importing Graphics

You can also import your own graphics and use them just as you would use the graphics included in the printer. You import graphics through the use of a USB flash drive. The imported graphics must be in the supported file format of Windows metafile (*.wmf) or a monochrome bitmap (*.bmp). Windows metafile (*.wmf) formats are vector images that maintain their clarity and crispness when they are resized. Bitmap files (*.bmp) are composed of pixels which may appear fuzzy and become distorted when they are resized. You can also import portable network graphics (*.png) and Joint Photographic [Experts] Group graphics (*.jpg). Be sure to choose the correct format for the graphic you are using.

The maximum size for graphics that can be imported is 1 megapixel (the height x width of the graphic = 1,000,000 pixels). Larger graphic files cannot be imported. If you get an “out-of-memory” error when importing an image, it means the image is too large. Try resizing the graphic on your PC to a smaller size, then import the graphic.

Note: Any paint program on your PC will indicate the image size when you open the image file. Use that paint program to resize the image to fit the memory requirements on the printer.

You can also import colored graphics, however the color of an imported graphic cannot be changed. The color picker feature is disabled when working with an imported colored graphic.

To import graphics from a USB flash drive:

1. First, copy the graphics to import into the root directory of the USB flash drive.
2. Plug the flash drive into any available USB port on the printer.
3. On the printer, touch **Menu**.
4. Under System, touch **Import**.
5. Touch **Graphics** (if not already selected).
6. Under External USB:, touch the graphic file name that you want to import.
7. Touch **Import**.

   The imported graphics display in the Imported: section.
8. When ready, touch **OK**.

Deleting Imported Graphics

Imported graphics that are no longer needed should be deleted to free up space.

To delete an imported graphic:

1. On the printer, touch **Menu**.
2. Under System, touch **Import**.
3. In the Import dialog box, touch **Graphics** (if not already selected).
4. In the Imported: list, touch the graphic you want to delete.
5. Touch **Delete**.
   A message displays requesting confirmation of the deletion.
6. Touch **Yes** to confirm the deletion.

   The graphic is deleted from the Imported: list. It is NOT deleted from the USB flash drive.
7. Repeat Steps 4 through 6 to delete additional graphics.
8. When finished, touch **OK**.

Set Data Source

You can convert an existing text or barcode object element into a serial or date/time element on the label. This applies to both template or freeform object elements. However, you cannot add serial data to a graphic.

Barcode	Graphic	Serial & Date/Time

To convert text or barcode to serial data:

1. In the Editor, touch the text or barcode element that you want to use for the serial data.
2. For a text element, touch More Options, then touch Set Data Source.
3. For a barcode, touch Change Barcode, then touch Set Data Source.

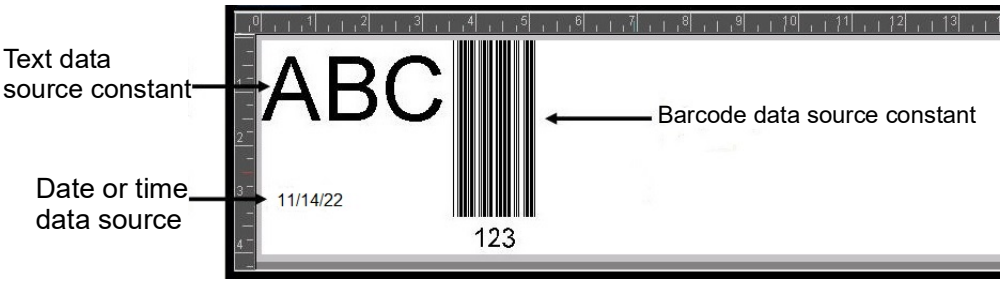

You have three options to choose from: Constant, Serial, and Date/Time.

- Constant keeps the data the same on every label printed. The data is fixed (or non-variable), it does not increment or decrement.
- Serial automatically adds a series of sequential numbers or letters to the printed labels. The Serial function consecutively places the next number or letter in the defined sequence on individual labels.
- Date/Time places the date and/or time on every printed label in a series. It is not the system date or time, but rather a date or time you define.

4. In the Set Data Source dialog box, touch the desired option.
5. If Serial or Date/Time is selected, fill in the requested data.
6. When ready, touch OK.

The text or barcode object is converted to a serial element on the label.

Convert from Serial Data

To change serial data to constant data:

1. In the Editor, touch the serialized text element or barcode element that you want converted to constant data.
2. For a text element, touch More Options.
   OR
   For a barcode, touch Change Barcode.
3. Touch **Set Data Source**.
4. In the Set Data Source dialog box, touch **Constant**.

If you are changing a barcode to constant data, the barcode dialog box opens. You are given the option to change the data value. If you do not change the data value, it defaults to the value shown in the Data value box.

5. Touch **OK**.
   The element changes to fixed (non-serialized) data.

Convert from Date/Time to Constant

To convert a date/time element to constant data:

1. Touch the date or time element.
2. Touch **More Options**, then touch **Set Data Source**.
3. Touch **Constant**.
   The date/time is converted to editable data.

Print/Cut

The print/cut feature gives you the option to cut around the text on the label. The default is set to Print, thereby printing the label text when the Print button is selected.

To cut out text:

1. Touch the text element containing the text to cut.
2. Touch the **Select All Characters icon**.

   The text will highlight.
3. Touch the **Font icon**, scroll the list to the font being used in the text element and select it.
4. Click **OK**.
5. In the text control panel, above More Options, touch the **left arrow** to go to the Print/Cut screen.
6. Touch **Cut option box**.

Weeding

Weeding affects printing and cutting multiple lines of text. When there are multiple lines of text, weeding by line cuts out the letters and also cuts out a box for each line. Weeding by line enables you to remove the background tape one line at a time. Weeding by object cuts out the letters and cuts out a box surrounding all the letters. If Weeding is turned off, no box is cut.

None	Line	Object

To access Weeding:

1. In the Control Panel, in More Options, touch the Left arrow to move to the Print/Cut screen.
2. Touch Cut Text option box.
3. Under Weeding, touch the desired weeding option (None, Line, Object).

Refer to “Using the XY Cutter” on page 58 for information on actually cutting out the text.

Note: To more accurately transfer the cut out text to the application surface, use Brady Transfer Tape #76737.

Cut-Out Shapes

Shapes and graphics can be added to your label. Shapes are added to your label through the Graphic Object. To add a shape to your label:

1. Touch the Editor screen where you want the shape to be added.
2. In the Add Object control panel, touch Graphic.
3. On the Select Graphic dialog box, under Category, touch Shapes.
4. From the list under Shapes, touch the desired shape.

   The selected shape is displayed in the Editor.
5. Select the color for the shape.
6. Choose to display as an outline or have it filled in with color.

Note: Changing back to outline format from a fill pattern leaves the outline in the color that was previously selected for the fill. For instance, if you elected to fill the shape with the color red, when reverting back to outline format, the outline displays in red.

Refer to “XY Cutting” on page 57 for information on cutting out shapes.

5 Printing

The Print function prints the file that is currently in the Editor. During printing, the print status is displayed and the Editor is unavailable. When printing is complete, you are returned to the Editor.

As you print your labels, keep the following in mind:

- The printer cuts between labels or at the end of the job, according to the selected cut settings.
- If there are no labels or ribbon installed, printing does not start and you will be prompted to install the labels or ribbon.
- If you open the ribbon cover during the print operation, printing stops and a message displays prompting you to close the cover. The print job is canceled. To print the labels, you must restart the print job.

Printing Labels Created on the Printer

Use this procedure to print labels created on the printer.

1. With a defined label in the Editor, touch **Print**.
2. In the Print dialog box select the print options:
   - **Copies**: (Visible only for a label that does not contain serial data. See “Copies” on page 57)
   - **Mirror**: Print labels suitable for reading in a mirror or through the back of the label. The Mirror setting is not retained for the next print job. The Mirror setting must be reselected each time you want to print mirror image labels. (see “Mirror Print” on page 55)
   - **Preview**: (see “Print Preview” on page 54)
   - **Print energy**: (accessed from the Advanced Settings button, (see “Advanced Settings” on page 55)
   - **Adjust Offset**: (accessed from the Advanced Settings button, (see “Advanced Settings” on page 55)
3. When ready to print, touch **Start Print**.

While the data is printing, the Print Status screen displays the progress. Once the data has printed, you are returned to the Editor.

Whether the labels are cut between labels or at the end of the job depends on the default parameters. (See “Printing Defaults” on page 10 for information on setting defaults.)

Cancel a Print Job

System Interruption

If a print job is interrupted due to a system error, for instance when media runs out or you intentionally open the cover, the system automatically stops the print job and displays a message.

To resume printing, while the job interruption message remains on the screen:

1. Correct the condition that caused the interruption (e.g., replace the labels or ribbon).
2. Touch Resume Current to reprint the current label, then continue printing.
   OR
   Touch Resume Next to print the next label, then continue printing.
   OR
   Touch Cancel to cancel the entire print job.

User Interruption

To intentionally cancel a print job once it has started:

1. On the Print Status screen, touch **Cancel**.

   The printer immediately stops printing, displays a print job interrupted message, and cuts the label.
2. To remove the message from the screen touch **OK**.

Note: Once Cancel is selected, the print job cannot be resumed until Print is selected again.

Print Preview

The Print Preview function enables you to view your label file prior to printing.

To preview a label:

1. Touch **Print**.
2. In the Print dialog box, touch **Preview**.

   The entire label is displayed for your review.

If you are previewing multiple copies of a label or a label with serialized data, left and right scroll arrows display enabling you to preview the multiple labels generated.

3. Touch **Next Label** *or* **Previous Label** to move forward or backward through the generated labels.
4. To print the labels from the Print Preview screen touch **Start Print**.

Mirror Print

Mirrored print takes all data on a label and flips it to provide a mirror image. Mirroring displays on the printed label only.

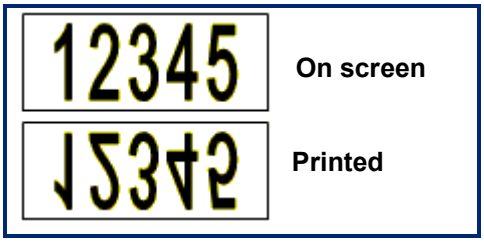

Figure 1 • Mirror image

To provide a mirror image of label contents, in the Print dialog box:

1. Touch **Mirror**.
2. When ready, touch **Start Print**.
   The mirror image displays on the printed label ONLY.

Note: You will not see the mirror image in Preview.

Advanced Settings

Print Energy

If the printing is spotty, try increasing the print energy to transfer more of the ribbon ink to the label. However, if the ribbon sticks or tears during printing, the heat energy may be too high and should be reduced.

CAUTION! Constantly printing at high energy levels may cause printer jams or other printing errors which could reduce the overall life of the printhead.

To adjust the print energy:

1. With a label in the Editor, touch **Print**.
2. In the Print dialog box, touch **Advanced Settings**.

3. In the Print Energy area, touch the appropriate box to **increase** *or* **decrease** the print energy level.

Note: By default, the print energy is at the nominal setting for the best overall performance. Because the nominal setting is programmed into the touch cell, the selected print energy setting stays in effect for all subsequent print jobs with the currently installed media. When new media is installed, the print energy level is reset to the default setting. The print energy level is also reset by rebooting the system.

4. If no further adjustments need to be made, press **OK**.

Print Speed

You can change the print speed to be faster or slower than the default print speed of the installed media. Reducing the print speed produces better print quality at the expense of speed. Higher speed can result in fainter print.

To adjust the print speed:

1. With a label in the Editor, touch **Print**.
2. In the Print dialog box, touch **Advanced Settings**.
3. Press **Print Speed** button.
4. In the Print Speed area, touch the appropriate box to **increase** *or* **decrease** the print speed.

The selected print speed setting stays in effect for all subsequent print jobs with the currently installed media. When new media is installed, the print speed level is reset to the default setting. The print speed level is also reset by rebooting the system.

Adjusting Print Offset

Print offset moves the image slightly in one direction or another on the label. Adjust Offset is typically used to do a fine adjustment of the printed image on a die-cut label, or to move the image slightly closer or further from the edge of a continuous supply.

Horizontal Offset shifts the printed portion of the label to the right or left. Vertical Offset shifts the printed portion of the label up or down.

To adjust the print offset:

1. In the Adjust Offset area, touch the horizontal and/or vertical offset data field and enter the **adjustment value**.
2. When finished with Advanced Settings, touch **OK**.

   You are returned to the Print dialog box.
3. When ready to print, touch **Start Print**.

Printing Labels Created on a Computer or Device

To print labels that were created using labeling software, such as Brady Workstation, on a computer do one of the following:

- Connect to the printer over a Wi-Fi network (if your model supports Wi-Fi).
- Use an Ethernet cable to connect the computer to the printer.
- If using the Brady Express Labels app, connect to the printer using Bluetooth or over a Wi-Fi network (if your model supports these options).
- Use the USB cable to connect the computer to the printer.

Copies

You can print a number of copies of a single label or a range of labels in a multi-label (series) file. The printer as a standalone printer does not support collating copies. Only when attached to a computer can it print collated copies. The labeling software determines how copies of labels are printed.

To print a number of copies:

1. Touch **Print**.
2. For a single label, in the **Copies:** field, enter the number of copies desired.

Note: When printing serialized labels, you can either print one copy of ALL the labels in the series, or you can print a sub-set (range) of the labels. When printing a range of labels in a series, use the Select labels feature.

3. Touch **Select Labels option box**, to place a checkmark in the box.
4. Touch the **From label:** field and enter the number of the first label to be printed.
5. Touch the **To label:** field and enter the number of the last label to be printed.
6. When ready to print, touch **Start Print**.

XY Cutting

XY Cutting is the action of cutting out objects or text using the plotter cutter inside your printer. The cutter follows the shape of the object or text. All objects can be printed OR cut, but not both simultaneously.

You can also cut out a label that has been framed. The plotter cutter cuts around the outside edge of the frame line.

You can cut around an object that is enclosed by a cut bounding box. A cut bounding box is a border you can set around objects that you want to print AND cut. The plotter cutter cuts the box shape, not the shape of the object inside it.

You create cut out objects by adding them to a label, the same way you create and add print objects. However, once you choose the Cut out object option, your other choices are limited to objects that may be cut out.

Not all tape supplies are appropriate for cutting. If the cutter cannot use the tape installed in the printer, the Cut out option in the control panel will be grayed out.

XY Cutter Blade Height

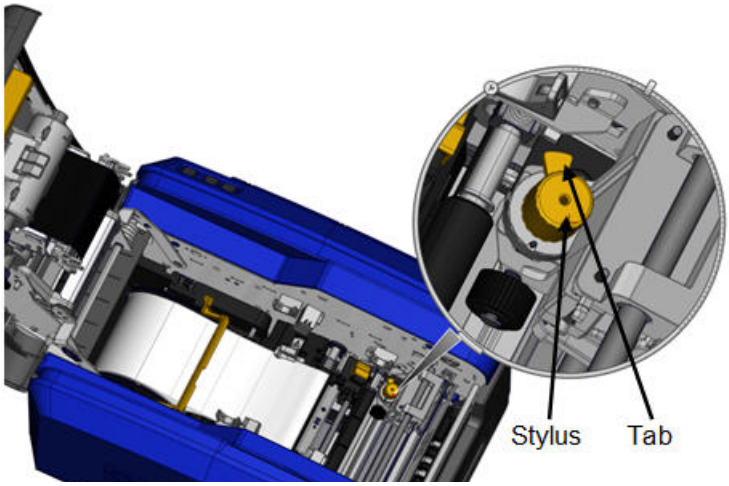

Different label supply requires different blade heights. When you touch the Print button, a message displays indicating if the media installed is able to be cut. If it is, another message displays indicating the blade height to use (height 1 or 2). To adjust the blade height:

1. Open the printer cover.
2. Looking into the printer from the side of the cover latch, the yellow stylus used for adjusting the blade height is located on the right side of the printer.
3. Grasp the tab extending from the stylus and turn the stylus to the left for blade height #2, or to the right for blade height #1 (as depicted on the label attached to the stylus mechanism).

Using the XY Cutter

With the label to cut out in the Editor:

1. On the Control Panel, in **More Options**, touch the **Left arrow**.
2. Under Print/Cut, touch **Cut Shape option box** to select.
3. Touch **Print**.
4. Touch **Advanced Settings**.
5. Touch **XY Cut Settings**.

To increase or decrease the depth of the cut line:

6. Touch **Adjust XY Cut Depth**.
7. Touch the **gradient box** for the desired increase or reduction in depth, then touch **OK**.

Adjusting Cutter Accuracy

Note: Overtime, the plotter cutter accuracy may drift. Use the Adjust XY Cut Accuracy feature to bring the offset back to factory settings. To adjust the cut accuracy:

1. On the MainEditor Screen, touch the screen and type any text character, for example the letter “A”.
2. Touch the **Print** Button.
3. Touch **Advanced Settings**.
4. Touch **XY Cut Settings**.
5. Touch **Adjust XY Cut Accuracy**.
6. Touch **Print Test Shape**.
7. Examine the printout and input the number where the cut path intersects the printline.
8. Repeat Step 6 and 7 until the output meets expectation.
9. Press **OK** to save the adjustment.

Depending on how the shape is cut, you can change the numbers in the horizontal and/or vertical cutting guides data fields for more accuracy.

10. When ready, touch **OK**.
    You are returned to the XY Cut Settings screen.
11. Touch **Cancel** to exit the XY Cut Settings screen.
12. On the Advanced Settings screen, touch **OK**.
13. On the Print screen, touch **Start Print**.
    The label prints out with the shape cut out.

6 Label Types

The following features apply to the overall label in general, not object elements.

Label Fixed Length

If using continuous media, the label length adjusts to fit the data that you add to the label (variable label length). This is known as autosizing and is the system default when using continuous media. However, to control the label length of the media, you can set fixed length.

Note: The label size for die-cut media is already set and cannot be adjusted.

Size & Orientation	Portrait	Landscape

To create a fixed-length label:

1. Touch **Menu**.
2. Under Label, touch **Size & Orientation**.

Note: You can also access the Label Size & Orientation dialog box by touching the Label Size in the text in the Status bar at the bottom of the screen.

3. In the Label Size & Orientation dialog box, touch **Fixed Length option box**.
4. In the Fixed Length data field, enter the desired label length.

Note: For single-color printing, the minimum supported length (after cutting) is 2 in. (51 mm). The maximum supported length is 16 ft (5 m). For multi-paneled ribbon, the label length is limited to 15 in. (381 mm). If doing multi-colored printing using mono-colored ribbons (i.e., swapping out the different colored ribbons), the maximum length is 48 in. (1219 mm). If printing with paneled multi-colored ribbons installed, you are limited by the length of the panel.

5. Touch **OK**.

   The Status Bar and the rulers indicates the new label length.

To return to Auto-Sizing:

1. Touch **Menu**.
2. Under Label, touch **Size & Orientation**.
3. In the Label Size & Orientation dialog box, touch **Autosize to Fit Data** option box.
4. Touch **OK**.

Orientation

You can print labels in portrait or landscape orientation. Portrait orients the label data elements lengthwise from top to bottom. Landscape rotates the label data, printing lengthwise from left to right. To set the label orientation:

1. Touch **Menu**.
2. Under Label, touch **Size & Orientation**.
3. Under Label orientation, touch **Portrait or Landscape** to achieve the desired print orientation of your label.

If the current data will not fit on the selected length, you are prompted to have the system make the data fit, or cancel the change. If you choose to make the data fit, the objects are moved and/or resized so they fit on the label; however, the objects will not be rearranged into a new orientation.

To make the data fit the orientation:

4. Touch **Adjust**.
5. When ready, touch **OK**.

Label Width

You can adjust the width of the installed media to accommodate up to 4 labels printed in the space of the adjusted width. Adjusting the width automatically changes the size of the font and the margins (boundaries). In this function, label width also addresses the height of the label, measured from top to bottom. For instance, if using 4-inch tape, when you select 2 Up, two labels would be 'stacked' and printed on the tape, each taking up 2 inches. If you selected 3 up, three labels would be 'stacked' and printed on the tape, each taking up approximately 1.333 inches. The fourth label would be printed trailing the first label.

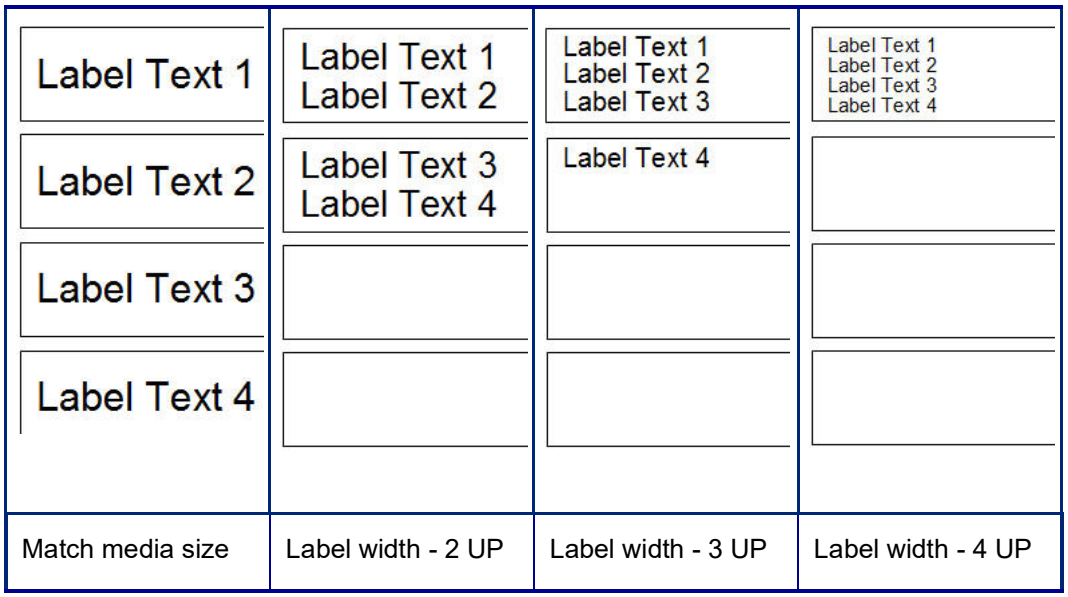

Figure 1 • Stacking labels using 2-, 3-, or 4-Up label width

To adjust the width:

1. Touch **Menu**.
2. Under Label, touch **Size & Orientation**.
3. Under Label Width, touch **Set Label Width**.
4. In the Set Label Width dialog box, with the Width option box selected, touch the desired width.

Note: Observe the preview panel on the right side of the screen to view how the labels will print.

You can also set a custom width. Setting a custom width disables the 2- 3- and 4-Up function. To set a custom width:

5. Touch **Set Custom Width** option box.
6. In the Set Custom Width data field, enter the desired width.
7. When finished, touch **OK**.

Framing a Label

A printable, or XY cut out frame (border) can be added to an entire label, surrounding all object elements on the label.

Note: When printing with frames around the labels, be sure the media guides fit snug against the media so the tape does not shift while printing. For making fine adjustments to the frame, see "Adjusting Print Offset" on page 56.

For fixed-size labels, when using continuous or die-cut media, the frame is applied to the outer perimeter of the printable area. If changed, the frame size changes with the label size.

To place a frame (border) around the entire label:

1. Touch **Menu**.
2. Under Label, touch **Frame**.
3. In the Label Frame dialog box, touch the desired frame shape: None, Rect., or Rounded.
4. Under Line properties, touch the frame line width: Narrow, Medium, or Wide.
5. For a colored frame, touch Color.
6. Touch the desired label frame color, then touch OK.
7. When your changes are complete, touch **OK**.

Label Types

The printer provides a number of pre-designed label types, containing different object elements and data fields already positioned on the label.

General Templates

The printer provides a number of pre-designed label templates, containing different object elements. Using a template makes it easier to format labels. When you power up the printer, the default label is a free-form custom label, allowing you to use any object on the label. When choosing the General Templates you are presented with a grid of labels with specific object elements already placed on the label. All you have to do is fill in the requested data (i.e., text, graphics, etc.). General Templates are designed for use with die cut or continuous labels.

To use a template, on the Home page:

1. Touch More Label Types.

   OR

   Touch Menu then, under Label, touch Templates.

Note: If General Templates is a label type you use often, place it in the Home Page control panel for easy access. (See Customizing the Home Page on "Customizing the Home Page" on page 64.)

2. Under Category, touch the template category to use.

   On the right side of the Select Template dialog box, templates in that category display.
3. Touch the desired template.

   The template displays in the Editor with the object elements scaled to fit the installed media. The cursor is in the first element.
4. Enter the appropriate data for that object element.

If there is more than one object element in the template, to move to the next element:

5. In the Editor, touch the desired element in which you want to enter data.

If the template displayed in the Editor does not suit your purposes, you can change the template. However, once you have defined data for at least one of the elements, the button to change the template is no longer available and you are prompted to save the file before continuing. To change the template before entering data:

6. In the Using a Template control panel, touch Change Template.

Customizing the Home Page

Place the most often used label types in the Home Page control panel for easy access. To customize your Home Page:

1. In the Home page control panel, touch **More Label Types**.
2. On the Label Types screen, touch **Customize**.

You can place three label types in the Home Page control panel. Before adding the frequently used label types, you have to remove one, or all, of the default label types. The preview pane at the bottom of the Customize screen displays the label types that are currently included in the Home page control panel. To remove a previously displayed label type from the control panel:

3. On the Customize screen, under Included, touch the label type to remove, then touch **Remove**.
4. Repeat the above step for all label types you want to remove from the Home page control panel.

To add a frequently used label type to the control panel:

1. Under Available, touch the label type to add to the control panel, then touch **Include**.
2. Arrange the order in which the label types display in the control panel.

To rearrange the order, with the desired label types displayed under Included:

3. In the Included: list, touch the label type you want to display in a different position in the control panel.
4. Touch Plus to move the label type up in the list, or Minus to move it down.
5. When finished, touch **OK**.

Application Label Types

General Templates contain standard formats used for most generic labels. Application label types, however, provide wizards that guide and control the layout for specific label applications, according to industry or government standards. For most application label types, dialog boxes display to collect information for automatically formatting the application label. For information on the data requested by the different applications, refer to that particular label type on the following pages.

1. To use an application label type, first launch the application.
2. From the Home page, in the control panel, touch **More Label Types**.
3. In the list of label types, touch the label type desired.

   The label type's wizard is launched.
4. In the Control Panel for the label type touch **Create New File**.

Many of the label types contain multiple dialog boxes to contain all the requested information. If multiple dialog boxes exist, Next and Back buttons display.

5. Enter the requested data, then touch **Next**.
6. When all requested information is satisfied, touch **Finish**.

Clearing

The name of the specific type being used is displayed in the Control Panel. When you are using an application label type, clearing the data removes the data you entered but the application label type parameters remain. To exit out of the application label type and return to the general editing mode of the printer, touch Home. You are prompted to save the label type data before being returned to the general template mode.

Save, Open, Delete

Application label types (pipe marker, circle gauge, etc.) are saved under the guidelines and parameters of the application in which they are created. Just as in a PC application (e.g., spreadsheet program, graphic program, etc.), you must be in the specific application in order to open that application's files. For instance, you cannot open a pipe marker file in the Right-to-Know application. Likewise, you cannot save a general template file and expect it to take on the attributes and formats of a gradient scale application label type. (For more information on file management, see page 88.)

While the mechanics of saving, opening, and deleting an application label type file are the same as a general template label file, the parameters saved with the file are different. Therefore, it is important to realize what application you are in when saving a file.

Save an Application Label Type

To save an application label type:

1. With the label type displayed in the Editor, touch **Menu**.
2. Under File, touch **Save File**.
3. Select a category, or if desired, create a new category. (See page 88 for information on creating categories.)
4. In the File name field, **enter a file name** for the label type.
5. Touch **OK**.

Open an Application Label Type

To open a specific application label type, first launch the application.

1. From the Home page, in the control panel, touch **More Label Types**.
2. On the Label Types screen, touch the application you wish to launch.

To open a saved label type:

3. From the label type's control panel, touch Open Saved File.

   OR

   Touch Menu, then under File, touch Open File.
4. In the Open File dialog, touch the category in which the file is saved.
5. In the list of saved files, touch the file to open.

Note: The application label file does not display in the list of files, under any category, if the application is not open. Remember to launch the specific application before attempting to open that application's files.

Delete an Application Label Type

To delete a specific application label type, first launch the application.

1. From the Home page, in the control panel, touch **More Label Types**.
2. On the Label Types screen, touch the application you wish to launch.
3. In the label type control panel, touch **Menu**.
4. Under File, touch **Delete File**.
5. In the Delete File dialog, touch the category where the label is located, then touch the label you want to delete.
6. When prompted to delete the file, touch **Yes**. (Touching No cancels the operation.)

Arc Flash Label Type

Arc Flash Labels identify potential hazards with energized switch boards, panel boards, control panels and more. Standard arc flash labels usually contain the header “Warning” or “Danger.” Arc Flash labels indicate the equipment-specific hazard information.

1. Access Arc Flash label type according to previous procedures (page 65).
2. On the Select Template screen, touch the category containing the Arc Flash template to use. (If only one category is present, it is already selected.)
3. Touch the Arc Flash template to use.

The template displays in the Editor. Depending on the Arc Flash template selected, text data fields are present, requesting information. Text data fields for user-supplied information are depicted as the word Text enclosed brackets (<Text>).

To access these data fields:

4. Touch the data field to enter data or touch Next Object to move on.

Using the Next Object button will consecutively advance through the data fields, until all data fields have been filled.

Some of the Arc Flash templates require a lot more user-supplied data than what can be displayed in the Editor at one time. On such a label, scroll arrows display on the label enabling you to bring portions of the label into view. If scroll arrows are present:

5. Touch the arrow pointing in the direction in which you want to move.
6. Save and open the Arc Flash label type just as you would any other application label type.

Circle Gauge Label Type

The Circular Gauge is a component used for displaying element values on a circular scale. It consists of range of numbers, bound by a minimum and maximum value, shown on the gauge. Typically, a gauge scale contains gauge labels and tick marks to give an accurate reading of what the gauge pointer shows.

A circular gauge arranges ticks and labels in a circular fashion, either on a full circle or a partial circle. A circular scale can be used to create scales, such as clocks and odometers. The data fields on the Describe your Gauge screen are used to set up the parameters for the gauge.

1. Access Circle Gauge label type according to previous procedures (page 65).
2. Under My Gauge Range, touch the Start Value data field and enter the starting (minimum) value of the range that you want the gauge to display
3. Touch the End Value data field and enter the ending (maximum) value of the range that you want the gauge to display.
4. In the Operating Range Angle, touch the desired angle you want the range to display on the gauge.
    a. If the desired angle is not present, touch Custom.
5. In the Custom data field (in the middle of the gauge pictogram), enter the custom angle degree.
6. When ready, touch Next.

   The In-Range Zone provides a visual element on the gauge to show when a system is entering its optimal value or detrimental value. For example, the temperature gauge in a car indicating when the engine is getting too hot; or a bicycle pump indicating when you have pumped the optimal amount of air for the type of tire you are inflating.

On the Label Setup screen, you are still describing parameters for the gauge (not the label).

7. On the Label Setup dialog box, under In-Range Zone, touch the Start Value data field and enter the starting value for the range that you want displayed on the gauge. (This In-Range Zone is depicted by the green area in the figure below.)

8. Touch the End Value data field and enter the ending value for the range that you want displayed on the gauge.

Note: The Start and End Value of the In-Range Zone must fall within the Start and End Value of the overall gauge range, previously set in My Gauge Range.

Note: The Caution Zone is optional. The Caution Zone provides a visual element that announces when you are reaching the In-Range Zone. (The Caution Zone is depicted by the yellow area on the preceding graphic.)

To set up a Caution Zone:

9. Touch the option box describing where you want the Caution Zone to display on the gradient (Before or After).
10. Touch the data field for the selected option box and enter the requested value (Start if Before, End if After).
11. When ready, touch Finish.

Gauge Colors

You can change the color of the ranges on the gauge. This is a good idea, especially if the In-Range Zone represents a detrimental scenario. For instance, for a car temperature gauge, you may want the In-Range Zone to display in red, indicating the engine is getting too hot.

To change the color of a circle gauge zone:

1. In the Circle Gauge Label control panel, in More Options, touch the Right arrow to move to the Colors control panel.
2. Under Colors, touch the option whose color you want to change (Out-of-Range, In-Range, or Caution).
3. On the Choose the Object Color screen, touch the color you want to apply to that zone.

Note: If the color you selected is not installed on the printer, a message displays telling you to install the color at the time of printing.

4. When ready, touch OK.

You can also have the gauge outline display with a thicker and darker boundary.

To better display the gauge outline:

5. On the Colors screen, touch Show Black Outline option box to select it.
6. Touch the line thickness option desired (Narrow, Medium, or Wide).

Cut Out Gauge

The printer has the ability to cut out the circle gauge to get the circle shape.

To indicate you want to cut out the gauge:

1. In the Circle Gauge Label control panel, in More Options, touch the Left arrow to move to the Print/Cut control panel.

2. Touch Cut Out Label option box, to signify you want to use the cutter on the printer.

Note: To help find the center of the gauge, in case the center of the gauge has a raised area, cut out the center of the circle of the gauge.

3. Touch Cut out center of circle option box.
4. To properly fit the gauge label onto the gauge face, touch Change Diameter.
5. On the Cut Out Circle screen, in the Diameter: data field, enter the diameter dimension.
6. Touch OK.

See page "XY Cutting" on page 57 for information on printing and using the cutter.

Gradient Scale

A gradient scale is a linear scale of blended colors. Each color defined for a numeric range blends with the next color, thus forming a gradient strip. Each point on the gradient scale represents a unique color and value. So, entities with different values appear in unique colors as per the position of the value on the gradient scale. All the lower and upper limits in the gradient scale are marked with ticks.

To create a Gradient Scale label:

1. Access Gradient Scale label type according to previous procedures (page 65).
2. On the Label Setup dialog box, under Scale Orientation, touch the button that indicates how you want the gradient scale to display (top, bottom, left or right).
3. Under Tick Values, touch the Start Value data field and enter the starting value for the scale.
4. Under Tick Values, touch the End Value data field and enter the end value for the scale.

The Label Size section defines the size of the gradient scale label. Side A (the long side) can be defined by either setting the distance between each tick mark (By Tick Spacing) or by setting an overall length of the scale (By Total Length). Populating one of these parameters automatically calculates the other parameter since they are dependent on each other. Side B is the dimension for the short side of the label.

5. Under Label Size, touch the option box that you want to determine the size of the label.
6. Touch the data field for the option box selected and enter the requested measurement.
7. Touch Next.
8. Under Tick Lines, touch the button that displays how you want the tick marks to display.
9. Under Tick Lines, touch the button that represents the desired width of the tick marks.
10. Touch Show Range Indicator option box if you want the colored bar to display along with the tick marks.
11. To change the size of the color bar, touch Color Bar Height (% of B): data field and indicate the percentage the color bar should occupy of the gradient scale.

The In-Range Zone provides a visual element on the gauge to show when a system is entering its optimal or detrimental value.

12. To add or change the size of the in-range zone, under In-Range Zone touch Start Value: data field and enter the starting value for the range.
13. Under In-Range Zone, touch End Value: data field and enter the ending value for the range.

Note: If you do not want an In-Range Zone, indicate a Start and End Value of 0 (zero).

14. To show the tick numbers on the scale, touch Show Numbers option box (if not already selected).

To change the font size of the numbers in the gradient scale, with the Show Numbers option box selected:

15. Touch the Font Size: data field and enter the desired point size of the font.
16. When ready, touch Finish.

GHS/CLP

CLP is the regulation on classification, labeling and packaging of substances and mixtures. This regulation aligns previous EU legislation on classification, labeling and packaging of chemicals to the GHS (Globally Harmonized System of Classification and Labeling of Chemicals). Its main objectives are to facilitate international trade in chemicals and to maintain the existing level of protection of human health and environment.

To create a GHS/CLP label:

1. Access GHS/CLP label type according to previous procedures (page 65).
2. Under Select Template, touch the desired template format, then touch Next.
3. Under Label Type, choose either a Mono (black only) label or Color (red diamond) label.
4. In the list, touch the desired label size, then touch Next.
5. Touch anywhere on the displayed label to bring up the CLP (GHS) Data dialog box.
6. In the Product Name: data field, enter the name of the chemical (product) you want to use.

   OR, if chemical names have been saved (previously used):

   Under Primary Language, touch the down arrow next to Product name to display a list of products, then touch the desired product.

If a second language is to be used on the label, under Second Language:

7. Touch the Second Language option box.
8. Touch the down arrow next to Second Language: data field to display a list of languages.
9. Use the up/down arrows in the list scroll bar to display more languages, then touch the desired second language.

Note: If using a second language, the product name automatically displays in the chosen language.

10. Touch OK.
11. On the displayed label, touch one of the statements to bring up the CLP (GHS) Statements dialog box.

12. Touch **Add** for the statement you want to add (Hazardous, Precautionary, Supplementary).
13. On the Select Hazardous Statements screen, touch the up/down arrows in the scroll bar to view more statements.

    OR, if you know the code number, or wording, of the statement you want to use:

    Touch the Search data field and enter the number or wording.

Note: As you enter the data in the Search field, or portions of the data, the list immediately abstracts those statements that have the entered characters in that position in their statement. The list narrows after each letter entered.

14. In the abstracted list, touch the option box in front of the statement you want to use. (You can select more than one.)
15. When ready, touch **OK**.
16. Repeat Steps 14 through17 for other statements that you want to add.

    OR, to remove a previously added statement:
    Touch Clear for the statement(s) you want to remove.
17. When ready, touch **Finish**.

    The label displays the added statements.

There are other fields on the label where you can add custom data. These fields are designated by brackets < >.

To add the suggested custom information:

1. On the label, touch the desired custom field (inside the brackets).

   A dialog box displays where you can enter the requested information.
2. Touch the desired data field and enter the data.
3. When finished with the particular data screen, touch **OK**.
4. When finished with the entire label, touch **Finish**.

Right-To-Know

Right-to-Know (RTK) labels inform individuals of chemical hazards, as required by OSHA's Federal Hazard Communication Standard 29 CFR 1910.1200. The most popular RTK labels use a number rating and color coding system in conjunction with written text to identify the chemical and its physical and health hazards. Right-to-Know labels should also include the appropriate hazard warnings and target organ warnings, as well as the name and address of the chemical manufacturer. Some options also include recommended personal protective equipment (PPE).

To create a Right-to-Know label:

1. From the Home page, touch **More Label Types**.
2. On the Label Types screen, touch **Right-to-Know**.
3. In the Right-to-Know control panel, touch **Create New File**.
4. On the Right-to-Know Format screen, use the up/down arrows in the scroll bar to view more format options.
5. In the list, touch the desired format, then touch **Next**.

6. On the Label Size screen, in the list presented, touch the desired label size, then touch **Next**.
7. On the Chemical Name screen, in the Name: data field, enter the name of the chemical that the Right-to-Know label addresses.
8. In the Cas#/Title: data field, enter the case number and or title of the label, then touch Next.
9. On the Signal Word screen, in the list presented, touch the Signal Word to use on the label. (Selecting No Signal Word will leave this space blank on the label.)
10. Touch **Next**.
11. On the Health Hazard screen, in the list provided, touch the health hazard rating to be used on the label, then touch **Next**.
12. On the Fire Hazard screen, in the list provided, touch the fire hazard rating to be used on the label, then touch **Next**.
13. On the Instability screen, in the list provided, touch the instability rating to be used on the label, then touch **Next**.
14. On the Specific Hazard screen, in the list provided, touch the specific hazard rating to be used on the label, then touch **Next**.
15. On the Physical and Health Hazard screen, in the displayed list under Available:, touch the hazard to include on the label. (Use the up/down arrows of the scroll bar to view more options.)
16. Touch Include to include the hazard on the label.
17. Repeat the above two steps to include as many hazards as required.
18. To remove items from the Included list, touch the hazard in the Included list, then touch Remove.
19. When ready, touch **Next**.
20. On the Target Organs screen, in the Available: list, touch any body organs that could be affected by the hazardous chemical being advertised on the Right-to-Know label, then touch Include.
21. Repeat the above step to include as many target organs as required.
22. To remove items from the Included list, touch the target organ in the Included list, then touch Remove.
23. When ready, touch **Next**.
24. On the Comments screen, in the Comments: data field, enter any noteworthy information to better explain the necessary precautions or health risks the Right-to-Know label is explaining.
25. When ready, touch **Next**.
26. On the Graphics screen, touch the desired graphic to add to the label. You can add as many graphics as required.

Note: The available graphics are divided into categories.

To change to another category:

1. Touch **Change Category**.
2. Under Categories, touch the up/down arrows to view more categories in the list.
3. Touch the desired category to select it, then touch **OK**.
4. On the Graphics screen, touch the left or right double arrows to scroll through the list of available graphics.

5. Touch the desired graphic in the list.
6. When ready, touch **Finish**.

Setting RTK Preferences

From the Right-to-Know Preferences menu, you can choose default label settings for size and format. You can also add or delete hazards and/or organ types. Any defaults set here will stay in effect until you change them.

If you use a standard or consistent Right-to-Know label format, set these formatting preferences as defaults. Setting preferences simplifies creating RTK labels.

To set RTK label defaults:

1. With the RTK label in the Editor, touch Menu, then under System, touch Setup.

   OR, when creating a new RTK label:

   On the Right-to-Know Format screen, touch Preferences.

Format

To set up a default label format:

1. In the Right-to-Know Preferences dialog box, touch **Format**.
2. On the Right-to-Know Format screen, use the up/down arrows in the scroll bar to view more format options.
3. In the list, touch the desired format, then touch **OK**.

Size

To choose a default label size:

1. In the Right-to-Know Preferences dialog box, touch **Size**.
2. On the Select default size screen, in the list presented, touch the desired label size,
3. Touch **OK**.

Note: The available label sizes are determined by the format type you have selected.

Hazard Types

To add a hazard type:

1. In the Right-to-Know Preferences dialog box, touch **Hazards**.
2. On the Add or delete hazards dialog box, enter the new hazard in the data field.
3. Touch **Add**.

To delete a hazard type:

4. In the Add or delete hazards list, touch the hazard you want to delete, then touch **Delete**.

Organ Types

To add an organ type:

1. In the Right-to-Know Preferences dialog box, touch **Organs**.
2. In the Add or delete organs dialog box, enter the new organ in the data field.
3. Touch **Add**.

To delete an organ type:

4. In the Add or delete organs list, touch the organ you want to delete, then touch **Delete**.

Pipe Markers

Pipe Marker labels are used to label what material flows through a pipe. There are three types of pipe marker labels - Standard, Rollform, and Symbol/Arrow Type.

The Standard Label is placed along the length of the pipe. Contents of the label include text and optional graphics. The direction of material flow is optional.

The Rollform Label is similar to standard pipe marker labels, except it is designed to wrap around the circumference of the pipe.

The Symbol or Arrow Type pipe marker consists of a single symbol (graphic) or arrow that repeats along the entire length of the label and wraps around the circumference of the pipe. The Arrow wraps around the pipe and indicates the direction of the content's flow.

Standard Pipe Marker

The Standard Pipe Marker application enables you to accurately label contents of pipes, conduits, and ducts according to the approved standards in the specific country. Directional arrows can be included on one or both ends of the pipe marker, indicating flow direction. These arrows are part of the template. Standard pipe marker layouts may be different depending on the region you are in and what standards your printer supports.

USA

Canada

Australia

Standard Pipe Marker applications are compatible with continuous media only. If no continuous media is installed when the Standard Pipe Marker application is selected, a message displays indicating incompatible media and the Standard Pipe Marker selection is canceled.

To use a Standard Pipe Marker label type:

1. From the Home Page, touch **Pipe Marker**, then touch **Create New File**.
2. On the Pipe Marker Style screen, touch **Standard**.
3. In the Dimensions dialog, choose a Tape Width that corresponds to the diameter of your pipe, then touch Next.

4. In the Pipe contents dialog box, choose the type of material that flows through the pipe.
5. Touch the up/down arrows to view more options in the list.
6. When found, touch the desired contents option to select it, then touch **Next**.

Note: The material selected determines the pipe marker colors based on the selected color norm in the Pipe Marker setup menu.

7. On the Legend screen, touch **Legend line 1:** data field, and enter the text to display on the label.

Note: You can add additional data in the Legend line 2: and Supplemental data: fields. Be aware, however, that entering more than one line of text may reduce the font size to a point where it no longer meets the pipe marking standard for the selected color norm.

8. When ready, touch **Next**.

Note: You can add up to four graphics to the pipe marker label. The available graphics are divided into categories.

To change to another category:

9. Touch **Change Category**.
10. Under Categories, touch the up/down arrows to view more categories in the list.
11. Touch the desired category to select it, then touch **OK**.
12. On the Graphics screen, touch the left or right double arrows to scroll through the list of available graphics.
13. Touch the desired graphic in the list.
14. Repeat the above two steps to add another graphic.
15. When ready, touch **Next**.

Note: Arrows can be added to a pipe marker label according to the standards defined by the country or region.

On the Arrows screen:

16. Touch the option box designating where you want the arrows to display - Before Legend and/or After Legend. (You can select both or none.)
17. Touch the option box indicating the direction in which the material flows through the pipe.
18. When ready, touch **Finish**.

If too many characters per line are used, a message displays prompting you to edit the text or lengthen the pipe marker. Likewise, if the length of all elements together exceeds the recommended length, you are prompted to edit the data or lengthen the pipe marker.

19. To edit the information, touch **Edit data**, then repeat Steps 6 through 18 above.
20. To have the printer scale the elements to fit on the label, touch Lengthen Pipe Marker.

    The printer scales the elements and lengthens the label to accommodate all data.

Set Up Pipe Marker Options

Setup options for Pipe Markers are different than those for standard, generic labels. Use this procedure to set up the pipe marker color norms.

To set up pipe marker color norms:

1. From the Home page, touch Pipe Markers.
   OR
   Touch More Label Types, then touch Pipe Markers.
2. From the Pipe Marker home page, touch Menu, then touch Setup.

Note: The list of norms and color standards for pipe marker labels vary according to the country of origin or the region you are in.

3. Under Color Norm, touch the desired country color standard.
4. When finished, touch OK.

Rollform Pipe Marker

Rollform Pipe Markers use only continuous media. Rollform Pipe Markers include one to two lines of text, repeated the length of the pipe marker, alternating at 90 degree and 270 degree rotation. You can add up to four graphics, placed in predetermined locations. Graphics are repeated and rotated along the length of the pipe marker, as is the text.

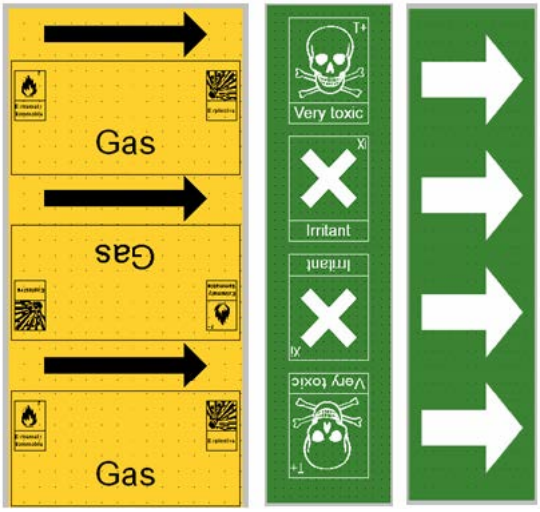

To use a Rollform Pipe Marker label type:

1. From the Home Page, touch Pipe Marker, then touch Create New File.

   OR

   Access Pipe Marker label type according to previous procedures.
2. On the Pipe Marker Style screen, touch **Rollform**.
3. In the Dimensions dialog, touch the **Pipe diameter:** data field and enter the diameter of the pipe to which the label will be affixed.

4. Under Tape width: touch the desired **Tape Width**, then touch **Next**.
5. In the Pipe contents dialog box, choose the type of material that flows through the pipe.
6. Touch the up/down arrows to view more options in the list.
7. When found, touch the desired contents option to select it, then touch **Next**.
8. On the Legend screen, touch **Legend line 1:** data field, and enter the text to display on the label.
9. You can add additional data in the Legend line 2: field, then touch Next.

Note: You can add up to four graphics to the pipe marker label. The available graphics are divided into categories.

To change to another category:

10. Touch **Change Category**.
11. Under Categories, touch the up/down arrows to view more categories in the list.
12. Touch the desired category to select it, then touch **OK**.
13. On the Graphics screen, touch the left or right double arrows to scroll through the list of available graphics.
14. Touch the desired graphic in the list.
15. Repeat the above two steps to add another graphic.
16. When ready, touch **Finish**.

Symbol or Arrow Tape Pipe Marker

The ArrowTape Pipe Marker application uses continuous media only. The Arrow Tape application includes a single graphic (or arrow), rotated 90 degrees, repeated the length of the label.

To create a symbol or arrow pipe marker:

1. From the Home Page, touch Pipe Marker, then touch Create New File.

   OR

   Access Pipe Marker label type according to previous procedures.
2. On the Pipe Marker Style screen, touch **Symbol or Arrow Tape**.
3. In the Dimensions dialog, touch the Pipe diameter: data field and enter the diameter of the pipe to which the label will be affixed.
4. Under Tape width: touch the desired Tape Width, then touch **Next**.

5. In the Pipe contents dialog box, choose the type of material that flows through the pipe
6. Touch the up/down arrows to view more options in the list.
7. When found, touch the desired contents option to select it, then touch **Next**.

To add a single arrow or symbol (graphic) to the pipe marker label:

8. On the Symbol Type screen, touch **Arrow** *or* **Graphic**.

Note: If selecting Symbol, the Graphics screen displays. The available graphics are divided into categories. To change to another category:

9. Touch **Change Category**.
10. Under Categories, touch the up/down arrows to view more categories in the list.
11. Touch the desired category to select it, then touch **OK**.
12. On the Graphics screen, touch the left or right double arrows to scroll throughout the list of available graphics.
13. Touch the desired graphic in the list.
14. When ready, touch **Finish**.

CLP PipeMarkers (Not available in all regions)

The CLP PipeMarkers include Standard, Rollform, and Arrows-type Pipe Markers, but incorporate the classification criteria, labeling rules, and graphic symbols used in CLP-GHS labels.

CLP Standard PipeMarker

To use a CLP Standard Pipe Marker label type:

1. From the Home Page, touch **More Label Types**, then touch **CLP Pipe Markers**.
2. On the CLP Pipe Marker screen, touch **Create New File**.
3. On the Pipe Marker Style screen, touch **Standard**.
4. In the Dimensions dialog, choose a Tape Width that corresponds to the diameter of your pipe, then touch **Next**.
5. In the Pipe contents dialog box, choose the type of material that flows through the pipe.
6. Touch the up/down arrows to view more options in the list.
7. When found, touch the desired contents option to select it, then touch **Next**.

Note: The material selected determines the pipe marker colors based on the selected color norm in the Pipe Marker setup menu.

8. On the Legend screen, in the Chemical name: field, **enter the name of the substance** that flows through the pipe or select from the displayed list.

To enter special characters:

9. Touch the **Chemical name: field** where the special characters should be placed.
10. Touch **Special Characters**, then enter the character(s). See “Adding Special Characters” on page 36 for more detail.
11. When ready, touch **Next**.

12. On the Comments screen, touch the option box of the single word you want to display on the label.

    OR, to display more than one word:

    Touch Other, then enter the desired word or words in the adjacent field.

Note: Be aware that entering long text strings in the “Other” option field (or the following Optional Comment: field) may reduce the font size to a point where it no longer meets the pipe marking standard for the selected color norm.

13. Touch the Optional Comment: field and enter additional comments to display on the pipe marker label, if desired.
14. When ready, touch **Next**.

Note: You can add up to four graphics to the pipe marker label. The available graphics are divided into categories.

To change to another category:

15. Touch **Change Category**.
16. Under Categories, touch the up/down arrows to view more categories in the list.
17. Touch the desired category to select it, then touch **OK**.
18. On the Graphics screen, touch the left or right double arrows to scroll through the list of available graphics.
19. Touch the **desired graphic** in the list.
20. Repeat the above two steps to add another graphic.
21. When ready, touch **Next**.

Note: Arrows can be added to a pipe marker label according to the standards defined by the country or region.

22. On the Arrows screen, touch the option box designating where you want the arrows to display - Before Legend and/or After Legend. (You can select both or none.)
23. Click **Next**.
24. To cut out the CLP Pipe Marker label, go to the Cut Out Label screen and select No Cut, Around Label or Around Arrows.
25. When ready, touch **Finish**.

CLP Rollform Pipe Marker

To use a CLP Rollform Pipe Marker label type:

1. From the Home Page, touch **More Label Types**, then touch **CLP Pipe Markers**.
2. On the CLP Pipe Marker screen, touch **Create New File**.
3. On the Pipe Marker Style screen, touch **Rollform**.
4. In the Dimensions dialog, touch the Pipe diameter: data field and enter the diameter of the pipe to which the label will be affixed.
5. In the Tape width: field, touch the desired Tape Width, then touch **Next**.
6. In the Pipe contents dialog box, choose the type of material that flows through the pipe.
7. Touch the up/down arrows to view more options in the list.
8. When found, touch the desired contents option to select it, then touch **Next**.

Note: The material selected determines the pipe marker colors based on the selected color norm in the Pipe Marker setup menu.

9. On the Legend screen, in the Chemical name: field, **enter the name of the substance** that flows through the pipe or select from the displayed list.
10. To enter special characters, touch the Chemical name: field where the special characters should be placed.
11. Touch Special Characters, then enter the character(s). See “Adding Special Characters” on page 36 for more detail.
12. When ready, touch **Next**.
13. On the Comments screen, touch the option box of the single word you want to display on the label.

    OR, to display more than one word:

    Touch Other, then enter the desired word or words in the adjacent field.

Note: Be aware that entering long text strings in the “Other” option field (or the following Optional Comment field) may reduce the font size to a point where it no longer meets the pipe marking standard for the selected color norm.

14. Touch the Optional Comment: field and enter additional comments to display on the pipe marker label, if desired.
15. When ready, touch **Next**.

Note: You can add up to four graphics to the pipe marker label. The available graphics are divided into categories.

To change to another category:

16. Touch **Change Category**.
17. Under Categories, touch the up/down arrows to view more categories in the list.
18. Touch the desired category to select it, then touch OK.
19. On the Graphics screen, touch the left or right double arrows to scroll through the list of available graphics.
20. Touch the **desired graphic** in the list.
21. Repeat the above two steps to add another graphic.
22. When ready, touch **Finish**.

CLP Arrow Pipe Marker

To create a CLP symbol or arrow pipe marker:

1. From the Home Page, touch **More Label Types**, then touch **CLP Pipe Markers**.
2. On the CLP Pipe Marker screen, touch **Create New File**.
3. On the Pipe Marker Style screen, touch **Symbol** *or* **Arrow** Tape.
4. In the Dimensions dialog, touch the Pipe diameter: data field and enter the diameter of the pipe to which the label will be affixed.
5. Under Tape width: touch the desired Tape Width, then touch **Next**.
6. In the Pipe contents dialog box, choose the **type of material** that flows through the pipe.
7. Touch the up/down arrows to view more options in the list.
8. When found, touch the desired contents option to select it, then touch **Next**.
9. On the Symbol Type screen, touch the arrow or graphic to add to the label.
   If selecting Symbol, the Graphics screen displays. The available graphics are divided into categories.

To change to another category:

10. Touch **Change Category**.
11. Under Categories, touch the up/down arrows to view more categories in the list.
12. Touch the desired category to select it, then touch **OK**.
13. On the Graphics screen, touch the left or right double arrows to scroll through the list of available graphics.
14. Touch the **desired graphic** in the list.
15. When ready, touch **Finish**.

HSID Pipe Markers (Not available in all regions)

The HSID PipeMarkers include Standard, Rollform, and Arrows-type PipeMarkers, but incorporate the classification criteria, labeling rules, and graphic symbols used in HSID education and labeling standards.

HSID Standard Pipe Marker

To use an HSID Standard Pipe Marker label type:

1. From the Home Page, touch **More Label Types**, then touch **HSID Pipe Markers**.
2. On the HSID Pipe Marker screen, touch **Create New File**.
3. On the Pipe Marker Style screen, touch **Standard**.
4. In the Dimensions dialog, choose a Tape Width that corresponds to the diameter of the pipe, then touch **Next**.
5. In the Pipe contents dialog box, choose the **type of material** that flows through the pipe
6. Touch the up/down arrows to view more options in the list.
7. When found, touch the desired contents option to select it, then touch **Next**.

Note: The material selected determines the pipe marker colors based on the selected color norm in the Pipe Marker setup menu.

8. On the Legend screen, in the Chemical name: field, **enter the name of the substance** that flows through the pipe or select from the displayed list.

Note: Whether you entered the substance name or selected it from the list, you can add additional information to the chemical name field, such as special characters.

9. To enter special characters, touch the Chemical name: field where the special characters should be placed.
10. Touch Special Characters, then enter the character(s). See "Adding Special Characters" on page 36 for more detail.
11. Touch the Comment: field and enter additional comments to display on the pipe marker label, if desired.
12. When ready, touch **Next**.

Note: You can add up to four graphics to the pipe marker label. The available graphics are divided into categories.

To change to another category:

13. Touch **Change Category**.
14. Under Categories, touch the up/down arrows to view more categories in the list.
15. Touch the desired category to select it, then touch **OK**.
16. On the Graphics screen, touch the left or right double arrows to scroll through the list of available graphics.
17. Touch the **desired graphic** in the list.
18. Repeat the above two steps to add another graphic.
19. When ready, touch **Next**.

Note: Arrows can be added to a pipe marker label according to the standards defined by the country or region.

To add an arrow:

20. Touch the option box designating where you want the arrows to display - Before Legend and/or After Legend. (You can select both or none.)
21. Touch **Next**.
22. To cut out the HSID Pipe Marker label, go to the Cut Out Label screen and select No Cut, Around Label or Around Arrows.
23. When ready, touch **Finish**.

HSID Rollform Pipe Marker

To use an HSID Rollform Pipe Marker label type:

1. From the Home Page, touch **More Label Types** button, then touch **HSID Pipe Markers**.
2. On the HSID Pipe Marker screen, touch **Create New File**.
3. On the Pipe Marker Style screen, touch **Rollform**.
4. In the Dimensions dialog, touch the Pipe diameter: data field and enter the diameter of the pipe to which the label will be affixed.
5. In the Tape width: field, touch the desired Tape Width, then touch **Next**.
6. In the Pipe contents dialog box, choose the **type of material** that flows through the pipe.
7. Touch the up/down arrows to view more options in the list.
8. When found, touch the desired contents option to select it, then touch **Next**.

Note: The material selected determines the pipe marker colors based on the selected color norm in the Pipe Marker setup menu.

9. On the Legend screen, in the Chemical name: field, **enter the name of the substance** that will flow through the pipe or select it from the displayed list.
10. To enter special characters, touch the Chemical name: field where the special characters should be placed.
11. Touch Special Characters, then enter the character(s). See “Adding Special Characters” on page 36 for more detail.
12. Touch the optional Comment: field and enter additional comments to display on the pipe marker label, if desired.
13. When ready, touch **Next**.

Note: You can add up to four graphics to the pipe marker label. The available graphics are divided into categories.

To change to another category:

14. Touch **Change Category**.
15. Under Categories, touch the up/down arrows to view more categories in the list.
16. Touch the desired category to select it, then touch **OK**.
17. On the Graphics screen, touch the left or right double arrows to scroll through the list of available graphics.
18. Touch the desired graphic in the list.
19. Repeat the above two steps to add another graphic.
20. When ready, touch **Finish**.

HSID Arrow Pipe Marker

To create an HSID Symbol or Arrow Tape pipe marker:

1. From the Home Page, touch **More Label Types**, then touch HSID Pipe Markers.
2. On the HSID Pipe Marker screen, touch **Create New File**.
3. On the Pipe Marker Style screen, touch **Symbol** *or* **Arrow Tape**.
4. In the Dimensions dialog, touch the Pipe diameter: data field and enter the diameter of the pipe to which the label will be affixed.
5. Under Tape width: touch the desired Tape Width, then touch **Next**.
6. In the Pipe contents dialog box, choose the **type of material** that flows through the pipe.
7. Touch the up/down arrows to view more options in the list.
8. When found, touch the desired contents option to select it, then touch **Next**.
9. You can add a single arrow or symbol (graphic) to the pipe marker label.
10. On the Symbol Type screen, touch arrow or graphic to add to the label.

If selecting Symbol, the Graphics screen displays. The available graphics are divided into categories.

To change to another category:

1. Touch **Change Category**.
2. Under Categories, touch the up/down arrows to view more categories in the list.
3. Touch the desired category to select it, then touch **OK**.
4. On the Graphics screen, touch the left or right double arrows to scroll through the list of available graphics.
5. Touch the **desired graphic** in the list.
6. When ready, touch **Finish**.

PreMade Labels

PreMade Labels is an application that provides a list of predefined labels.

To create a PreMade Labels:

1. Access PreMade Labels label type according to previous procedures.
2. From the Select Label dialog, enter the Label ID, if known. (See “Reference Images” on page 116.) If you do not know the label ID, touch Browse.

3. Under Category, touch the up/down arrows in the scroll bar to view more options in the list, then touch the desired category.
4. Touch the up/down arrows in the scroll bar to the right of the displayed labels to view more labels. Then, in the list, touch the desired PreMade Labels.

   The label immediately opens in the Editor.
5. Edit the PreMade Labels using normal editing procedures.

You can save, open, or delete PreMade Labels according to normal label procedures.

Tags

A Tag is a basic label that usually contains a reinforced hole through which you can insert a lanyard, zip tie, string, or other tying device. Tag media allows for the string-attachment hole and places the data outside this area. The data placed on a tag follows general template formats.

To create a Tag label type:

1. From the Home Page, touch **More Label Types**.
2. In the list of Label Types, touch **Tags**.

   The list of templates display.
3. Under Category, select an option from the desired template category.
4. Edit the object elements following standard label editing procedures. (See page “Elements” on page 24.)

WHMIS

WHMIS stands for Workplace Hazardous Materials Information System. It is a comprehensive plan for providing information on the safe use of hazardous materials used in Canadian workplaces. Information is provided by means of product labels, material safety data sheets (MSDS) and worker education programs.

A WHMIS label can be a mark, sign, stamp, sticker, seal, ticket, tag or wrapper. It can be attached, imprinted, stenciled or embossed on the controlled product or its container. However, there are two different types that are used most often: the supplier label and the workplace label.

A WHMIS label is a source of information on a controlled product designed to alert employers and employees, in an easily understood way, to the hazards of the product and the precautions to be taken when working with or near the product. The WHMIS label is the first hazard warning employees will see.

To create a WHMIS label:

1. From the Home Page, touch **More Label Types**.
2. In the list of Label Types, touch **WHMIS**.
3. On the Select Template screen, under Category, touch the desired template category to use for the WHMIS label.
4. In the list of templates displayed, touch the desired template.
5. On the label in the Editor, touch the various elements displayed and enter the appropriate data for that element (i.e., graphics, text, barcode, etc.), according to standard procedures. (See label formatting options, starting on page 24.)

   The template displays in the Editor.

Note: Depending on the WHMIS template selected, text and graphic data fields are present, requesting information. The data fields for user-supplied information are depicted as the word Text enclosed brackets (<Text>) or a generic graphic boundary box.

To access these data fields:

6. Touch the data field to enter data or touch Next Object.

Note: Using the Next Object button will consecutively advance through the data fields, until all data fields have been filled.

When accessing a graphic data field (either by touching or using the Next Object button), the Select Graphic screen immediately displays.

The WHMIS category is selected by default, however you can select a different category if desired.

7. Touch the desired graphic.

   The selected graphic is immediately displayed on the WHMIS label in the Editor.

Note: On the Select Graphic screen, touch Cancel if you do not want to add a graphic.

7 File Management

A label can be saved as a file, to be opened and reused at a later date.

File Naming Standards

To create a file on the printer, the file must be given a name. Names can be any length and consist of letters, numbers, and spaces.

IMPORTANT! Two files cannot have the same name in the same storage area (category). The most recent file with the same name overwrites the previous file with that name. A single character difference in the name creates a different file and will not overwrite a previous file.

Save

You can save a file internally on the printer or on an external device (such as a USB drive). The saved file retains the label data, data attributes, and alignment parameters. This file is available for reuse whenever needed.

To save labels as a file:

1. Touch **Menu**.
2. Touch **Save File**.

Note: You have the option of saving files directly on your printer (Internal Memory) or on a removable, external flash drive (External USB).

3. The printer defaults to Internal Memory. To save externally (on a USB flash drive) touch External USB.

Note: If storing externally, ensure the USB flash drive is plugged into a USB port.

For ease in locating files, create a directory system by placing the files into Categories. The printer provides an initial category (My Labels), which is automatically selected when you save a label.

To create a new Category:

4. Touch **New Category**.
5. In the Name: data field, enter a Category name, then touch **OK**.

   The Category is automatically selected.To save a file in this Category, proceed to Step 7.

   To save the label file in a different category from the one that is selected:
6. On the Save File screen, touch the Category in which the label should be saved.
7. In the **File Name** data field, enter a name for the label file, then touch OK.

Note: If the name already exists, a message displays asking if you want to overwrite the previous file with that name.

8. To overwrite, touch Replace OR, to remove the message from the screen and return to the file name entry box: Touch No.
9. To enter a different file name repeat Step 7 above.

New Label

When the file is saved, you are returned to the Editor screen with the saved file still displayed.

To start a new file, touch Home or Menu followed by New File.

The previously saved label is removed from the Editor and a new label is started. If using a Text object, the font and font attributes return to the defaults.

Note: If you start a new file by touching Home, the Editor defaults to a Text object where you can immediately begin entering data from the keyboard. To use a different object (i.e., graphic, barcode, etc.), touch the Editor screen, then touch the desired object button in the control panel.

Open a File

To open a saved file:

1. Touch **Menu**.
2. Touch **Open File**.

Note: Only one file can be displayed on the screen at a time. When opening a saved file, if the Editing screen contains other data (or a blank object), you are prompted to save the data before the screen is cleared. If you decide to save the displayed data, the Save function is invoked and you are allowed to give the data a file name before the list of files to open is displayed.

3. On the Open File screen, indicate if the file to open is stored internally on the printer or externally on a USB drive.

Note: If the file to be opened is stored externally, in order to get the desired list of files, be sure to plug the USB flash drive into a USB port on the printer. If the flash drive is not plugged in, External USB is unavailable (grayed out).

4. From the list of previously saved files and categories, touch the category in which the file is saved.
5. In the list of files, touch the file to open.

Delete a File

The display screen does not have to be cleared before deleting a file. A file can be deleted with other data still on the screen. When a file is deleted, it is removed from the system and is no longer available for use.

To delete a previously saved file:

1. Touch **Menu**.
2. Touch **Delete File**.

3. Indicate if the file to be deleted is stored internally on the printer or externally on a USB drive.

Note: If the file to be deleted is stored externally, be sure to connect to the external source in order to get the desired list of files. If the flash drive is not plugged in, External USB is unavailable (grayed out).

4. From the list of previously saved files and categories, touch the category in which the file to delete is stored.
5. In the list of stored files, touch the file to delete **or** click the box next to Select All to delete all of the files.

   A delete confirmation message displays.
6. Touch Yes to accept the deletion or No to cancel the delete function.

If No is selected, you are returned to the Delete File screen where you can select a different file for deletion. If Yes is selected, you are still returned to the Delete File screen, but the deleted file is no longer in the list of files.

7. To exit out of the Delete File function, whether a file has been deleted or not, touch **Cancel**.

   You are returned to the Editor screen.

Files Saved from BradyWorkstation on USB

Print a .prn file type using a USB drive.

To print a .prn file:

1. In Brady Workstation, go to **Print Advanced Settings** and select **Print to File** with the USB drive being the destination for the .prn file.
2. Put the .prn file in the /SavedFiles/Print Jobs folder on the USB drive.

Note: If the folder does not exist, create a folder named SavedFiles in the root directory of the USB drive. Then create a folder within "SavedFiles" named Print Jobs.

3. Click the **Save Settings** button then click the **Print** button to generate the .prn file to the destination specified in step 1.
4. Eject the USB drive from the laptop or PC and plug it into any available USB port on the printer.
5. On the printer, touch the **Menu** button.
6. Touch the **Open File** button.
7. Touch the **External Storage** button.
8. Navigate to the Print Jobs category and select the file to print.
9. Press the **Print** button.

Note: The .prn file cannot be viewed or edited on the printer.

8 Maintenance

Upgrading Firmware

Upgrades to firmware are available online or through Brady Workstation desktop software.

CAUTION! The printer must be plugged in to an AC outlet during a firmware upgrade. Do not interrupt printer power during an upgrade.

Upgrading using Brady Workstation

1. Connect the printer with a USB cable to a computer that has Brady Workstation installed.
   The computer must be connected to the Internet.
2. Run the Brady Workstation software and open the Printers tool, which indicates when upgrades are available.
3. See the help in the Printers tool for more details.

Upgrading using a USB Drive

1. On a computer, go to the technical support website for your region. See “Technical Support and Registration” on page iv.
2. Find firmware updates.
3. Find the most recent BradyPrinter S3700 firmware upgrade.
4. Download the firmware.
5. Save the downloaded file to a USB drive.
6. Connect the USB drive to the USB port on the printer.
   The printer recognizes the upgrade file and displays a message on the screen.
7. Follow the instructions on the screen.
   When the upgrade is complete, the printer restarts.

Updating Printer Label Library Values

The Printer Label Library values are included in a database of label and ribbon part information that enables the printer to work optimally with various supplies.

Update these values periodically to make sure the printer has data for any new label supplies. Also, update if you have ordered a custom label supply from Brady and it came with new values.

You do not need to know your current database version. The printer displays a confirmation message showing the version numbers during the import process.

Upgrades to Printer Label Library values are available online or through Brady Workstation desktop software.

To upgrade from Brady Workstation:

1. Using the USB cord, connect the printer to a computer that has Brady Workstation installed. The computer must be connected to the Internet.
2. Run the Brady Workstation software and open the Printers tool, which indicates when upgrades are available.
3. See the help in the Printers tool for more details.

To update values using a file online:

1. On a computer, go to the technical support website for your region. See "Technical Support and Registration" on page iv.
2. Find firmware updates and the most recent BradyPrinter S3700 database (Printer Label Library) update.
3. Download the database update.
4. Save the downloaded file to a USB drive.
5. Connect the USB drive to a USB port on the printer.
6. On the touchscreen, select **Menu** then **System** and select **Import**.
7. From the Import window, select **Printer Label Library** then under External USB select **S3700-300YB.json** and click the **Import** Button.
8. Click **OK** on the Import Printer Label Library File message box.

   The new values take effect as soon as the import completes.
9. Cycle power on the printer.

Cleaning the Printer

Cleaning the printer will improve print quality and legibility. It also increases output, machine life, printer reliability and performance.

CAUTION! Before performing any maintenance which involves opening the enclosure cover, remove the label supply and ribbon from the printer and disconnect the power cord.

CAUTION! Always wear safety glasses when using compressed air.

Internal Components

To clean residue from the printer:

1. With safety glasses on, spray compressed air on any parts of the printer and keyboard that have built-up residue.

Note: If compressed air is not available, use a lint-free cloth lightly moistened with Isopropyl alcohol and wipe off residue.

2. If necessary, use a moistened, lint-free cloth to clean the keyboard keys.
3. Replace the ribbon and labels.
4. Close all covers and plug in the power cord.

To clean dust from the unit:

1. Unplug the printer from the electrical outlet.
2. Remove the ribbon and labels.
3. Using compressed air, spray all visible areas inside the printer to remove accumulated dust.
4. Using a cloth moistened with Isopropyl alcohol, wipe any remaining dust from inside the printer.
5. Wipe exterior cover and frame of printer for dirt and residue.

Touchscreen

Note: Normal cleaners with ammonia, soaps, or any acids can damage the screen. Use only a lint-free cloth dampened with Isopropyl alcohol

To clean the touch screen:

1. Lightly moisten a soft (non-scratching) cloth with Isopropyl alcohol or use a pre-moistened swab from the Brady Cleaning Kit PCK-6.
2. Gently wipe the display screen until clean.
3. Remove excess Isopropyl alcohol with a dry, soft (non-scratching) cloth.

Cutter Blade

Note: When cleaning the cutter, you should also clean the media and cutter sensors.

The printer cleaning kit ships with the printer. It contains swabs and a squeeze bottle to be filled with the Isoproply Alcohol. The Cutter Cleaning Tool (B31-CCT) ships with the printer can also be purchased as an accessory.

1. Remove the side panel.
2. Open the printer cover.
3. From the inside of the printer, use a tool (such as a screwdriver) to push the panel release catch in on the left and right side of the printer.

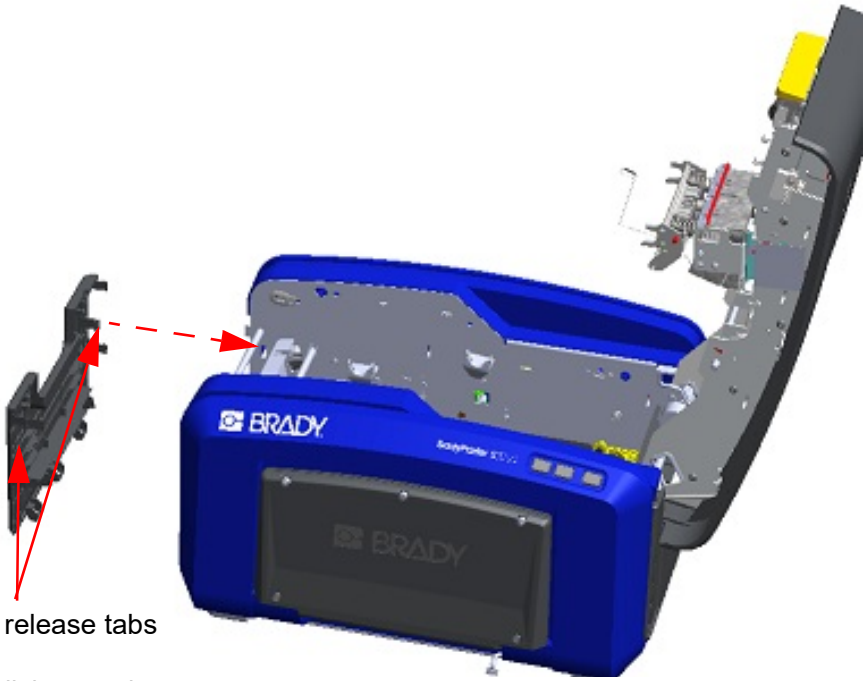

Panel release tabs

4. Pull the panel out.

5. To remove the black roller, slightly pull the snap tab toward you while lifting the roller to release the catch. Perform this action on both sides of the roller (left and right).

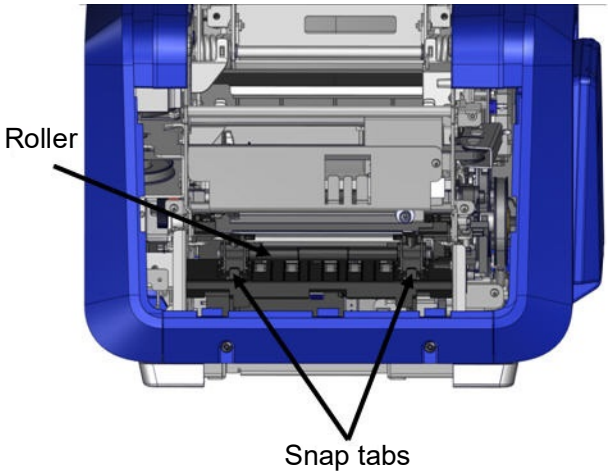

6. When free of the catches, lift the roller out.
7. Using a cotton swab, clean the cutter area.

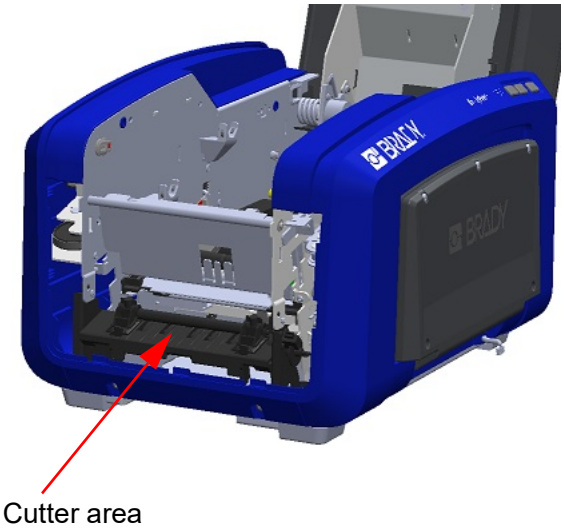

8. To return the black roller to its original position, align the tabs with the insertion slots, then snap the roller into place.

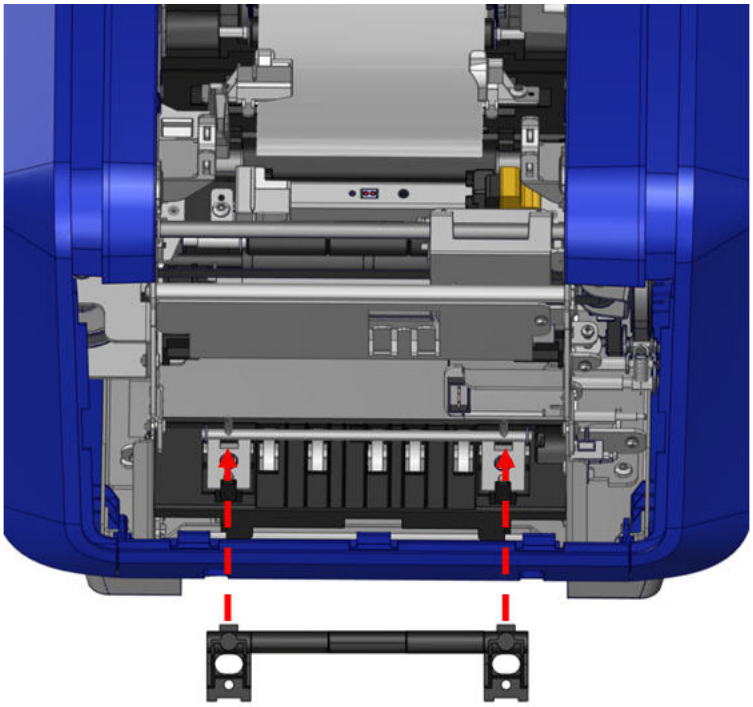

9. To replace the gray panel, hook the three loops on the bottom of the panel over the blue tabs on the printer, then push the panel up into place.

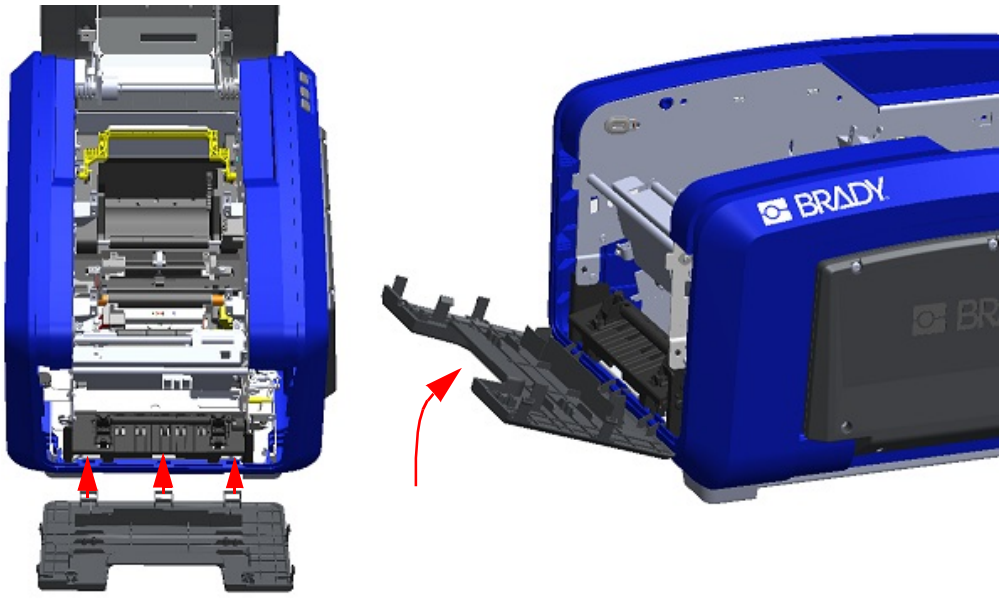

Cutter Blade Exit Area

This procedure cleans the cutter blade exit area and the exit chute.

To clean the exit chute, use a pre-moistened swab from the Brady Cleaning Kit PCK-6, then clean the exit chute entrance and exit chute ramp.

Note: To reach all areas of the exit chute, you can close the enclosure cover and carefully tilt the printer up on its side.

Sensors

Some sensors on the printer are susceptible to dust that results from cutting or printing. These sensors located under two media guides. The media guides can be removed to display the sensors.

To clean the sensors:

1. First, remove the ribbon and label supply from the printer. (See "Removing the Ribbon" on page 17 and "Removing the Labels" on page 19.)
2. Loosen the screw on the two left media guides, then carefully lift the media guide up to expose the sensors underneath.
3. Using a pre-moistened foam swab, gently insert the swab under the media guides and wipe the surface of the sensors. Do not allow the alcohol to drip from the swab.

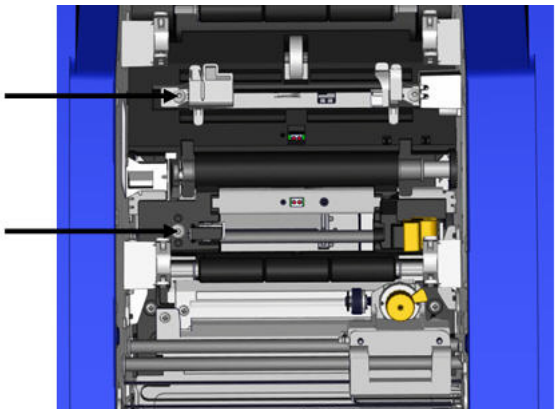

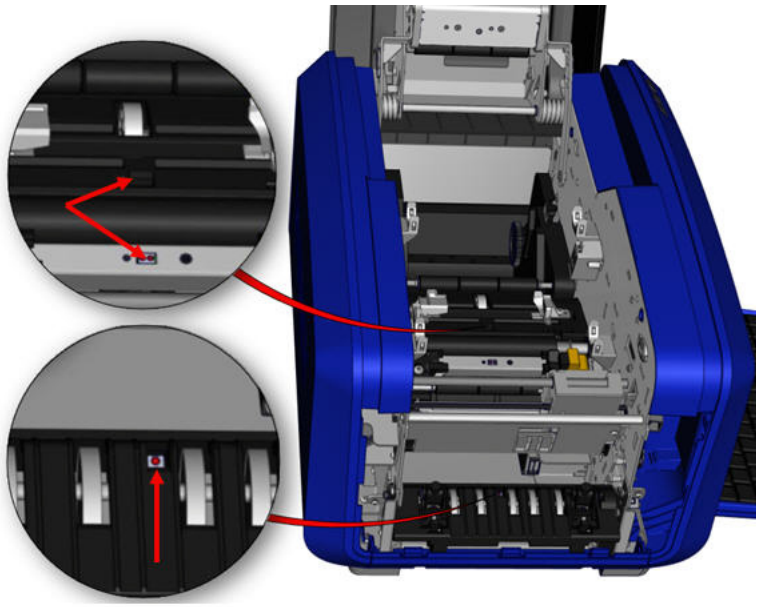

Sensor Locations

4. Clean the other three sensors indicated in the figure above.
5. Insert the straw into the nozzle of a can of compressed air and align the tip of the straw with the holes outlined in the picture to the right. Spray air to clean the color sensors within.
6. After cleaning the sensors, carefully lower the media guide, then tighten the screw.
7. Wipe the two other sensors in the media feed path. (Outlined in the figure above.)
8. Also, wipe the sensor under the cutting mechanism in the media exit chute. (Outlined in the figure above.)

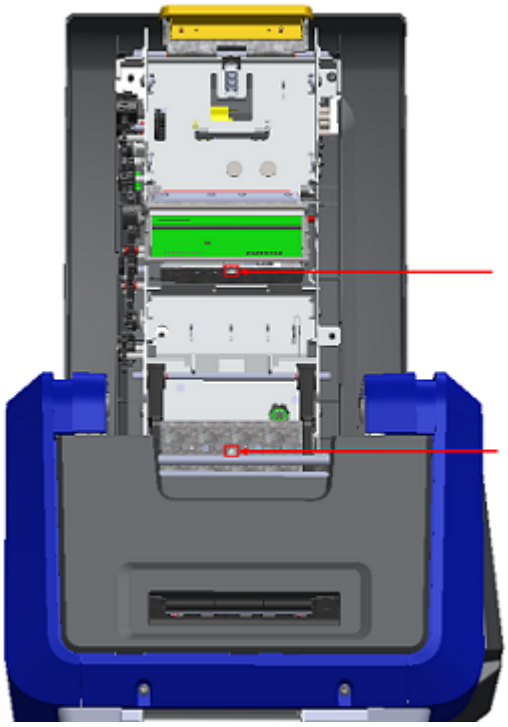

Printhead

To clean the printhead:

1. Unplug the printer from the electrical outlet.
2. Remove the ribbon and labels.
3. Fill the plastic bottle from the cleaning kit with Isopropyl alcohol.

Note: Do not rub the swab over the bronze-colored area of the printhead.

4. Moisten one of the foam swabs from the cleaning kit with the alcohol and gently rub across the green and black area of the printhead.

CAUTION! Use only the materials supplied in the cleaning kit. Using other materials may permanently damage the printhead.

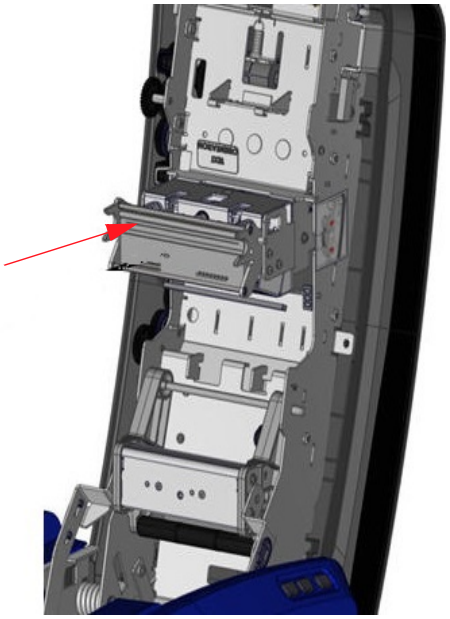

5. Replace the ribbon and tape.
6. Close all covers and plug in the power cord.

Media Wiper

To clean the media wiper:

1. Turn the printer.
2. On the media wiper blade, push the notch to the left through the trough.
3. Clean the exposed foam bits with a pre-moistened swab from the cleaning kit.
4. When finished, slide the notch to the right to close.

Note: The media wiper pad is sold as an accessory and can be replaced by lifting up the media wiper, sliding out the old pad and sliding in the new.

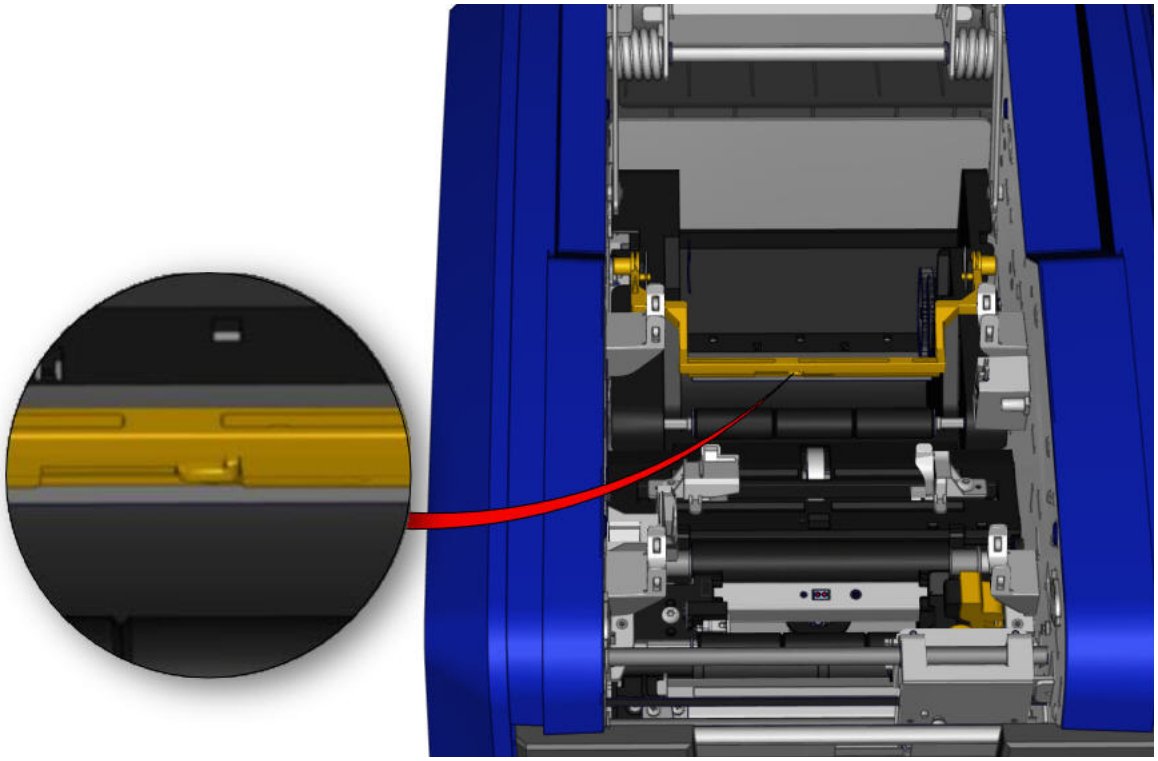

5. Replace the ribbon and tape.
6. Close all covers and plug in the power cord.

XY Cutter Blade

To clean the XY cutter blade:

1. Unplug the printer from the electrical outlet.
2. Remove the ribbon and labels.
3. Open the cover of the printer
4. Unscrew the thumbscrew of the XY cutter module.

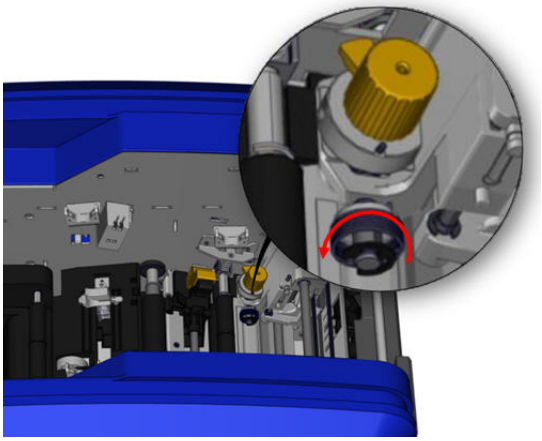

5. Lift the cutter module from the carriage.

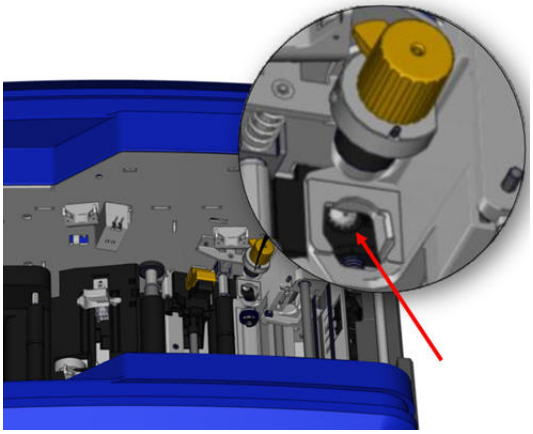

6. Using a cotton swab moistened with the Isopropyl alcohol, clean off any dust from the area where the blade sticks out.

To re-install the cutter module:

7. Place the flat surface of the collar against the carriage, then insert the cutter module into the carriage.
8. Tighten the thumbscrew until it clicks.

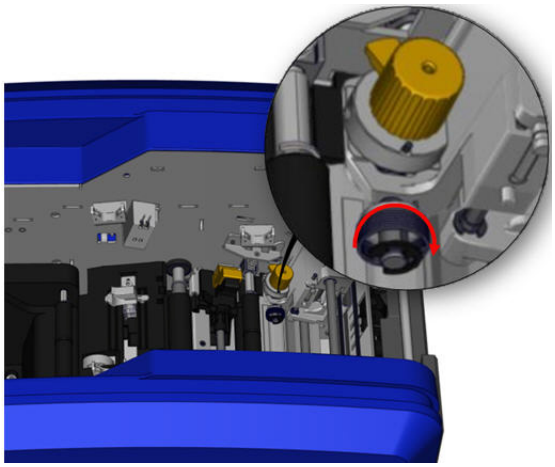

Upper Guide and Cut Pad

Overtime, dust and adhesive builds up on the upper guide and the cut pad. These parts can be removed for cleaning.

To remove the Upper Guide and Cut Pad:

1. Unscrew the XY plotter thumbscrew completely to remove it.

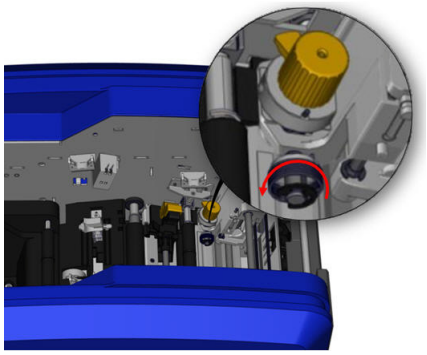

2. Grasp the cutter module and gently pull up to remove it from the carriage.

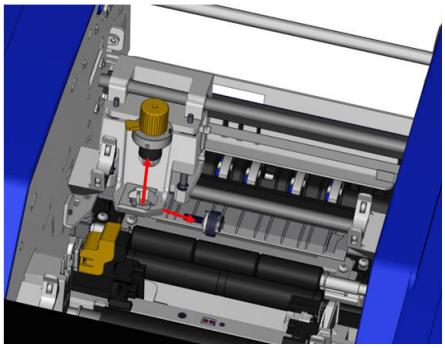

3. Use a magnetic screw driver (so screws do not drop into the printer) remove the upper guide screw.

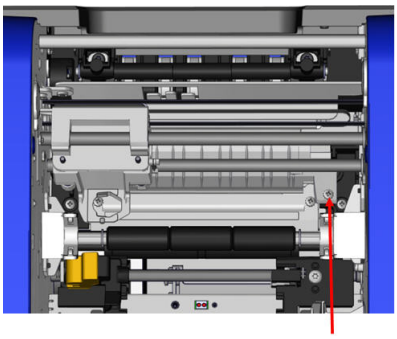

4. To remove the upper guide, gently loosen the unscrewed end of the upper guide, then swing the guide out from under the XY cutter carriage.

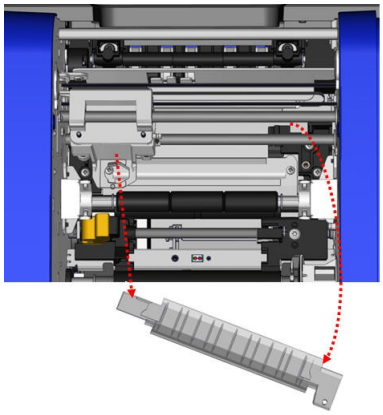

5. Use a moistened wipe from the cleaning kit to clean the upper guide.

6. Remove the cut pad screws.

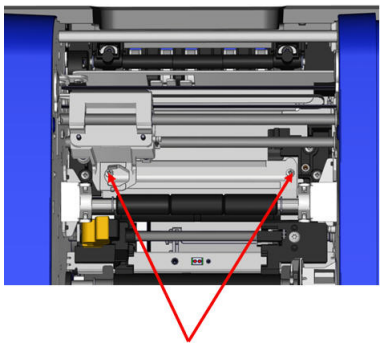

7. Gently pull up on the tab to loosen the cut pad, then swing the cut pad out from underneath the XY cutter carriage to remove it.

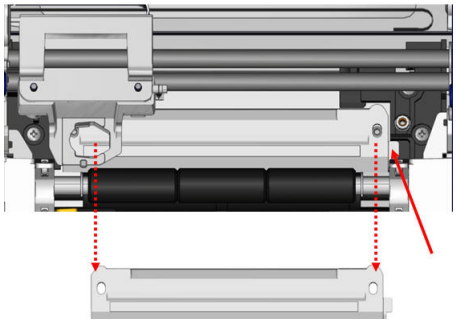

8. Use a moistened wipe from the cleaning kit to clean the cut pad.

To reinstall the cut pad and upper guide:

9. Tuck the left edge of the cut pad underneath the cutter module carriage, then swing the right edge back into place, lining up the holes for the screws.

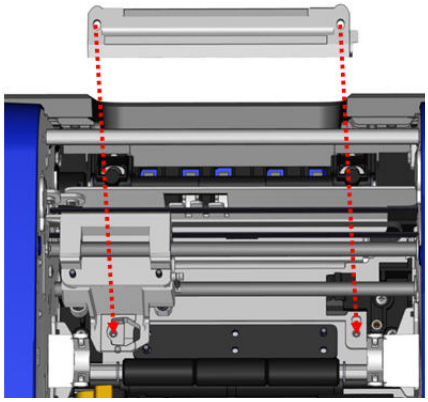

10. Re-insert the two screws into the aligned holes and tighten.

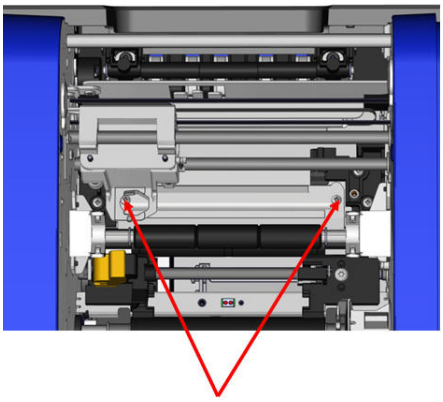

11. Tuck the left edge of the upper guide underneath the cutter module carriage, on top of the cut pad, aligning the hole on the right side with the empty screw hole.

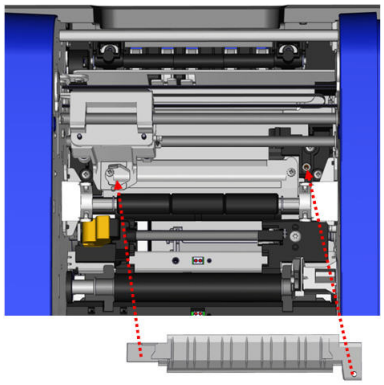

12. Replace the upper guide screw into the screw hole and tighten.

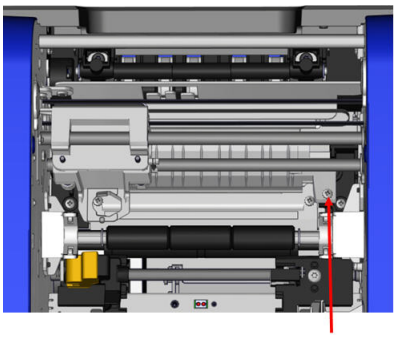

13. Replace the cutter module by placing the flat surface of the collar against the carriage, then inserting the cutter module into the carriage.

14. Insert the thumbscrew in the hole on the side of the cutter module carriage and tighten until it clicks.

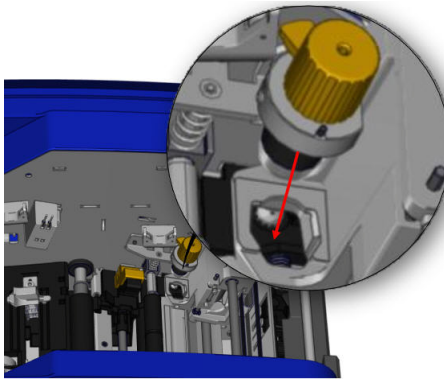

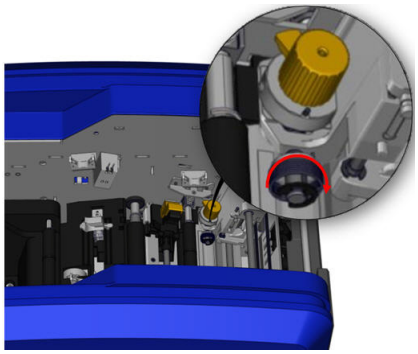

Replacing the Printhead

Replace the printhead if you consistently see the same unprinted spots on labels. Make sure to use the appropriate printhead for your model of printer. A mismatched printhead will not work properly.

Contact Brady Technical Support for the replacement printhead part number. See "Technical Support and Registration" on page iv.

CAUTION! Take the following precautions to avoid damaging the printhead with electrical discharge or mechanical influences.

- Set the printer on a grounded surface. Leave the printer plugged in, but turn off the power.
- Ground yourself (with an anti-static wrist strap, for example).
- Do not touch the connectors.
- Do not touch the heating element with hands or hard objects.

To replace the printhead:

1. Remove the label supply from the printer. See "Removing the Labels" on page 19.
2. Open the ribbon door and remove the ribbon. See "Removing the Ribbon" on page 17.

CAUTION! If the printhead is hot, allow it time to cool before proceeding. Handling a hot printhead could result in burns.

3. Push the printhead down, pull on the locking pin, and then lift up the printhead.

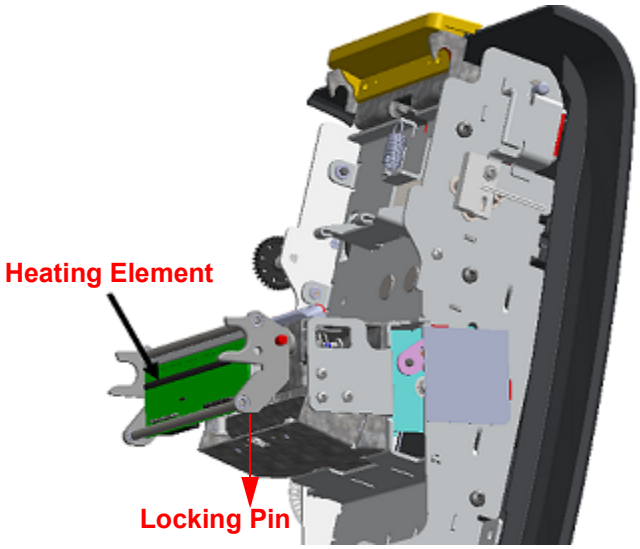

4. Rotate the printhead to expose the cables. Note the orientation of the cables so that you attach them to the new printhead in the same orientation.
5. Remove the two cable connectors, one white and one black. To remove the white cable, squeeze the tab to release it while pulling it out.

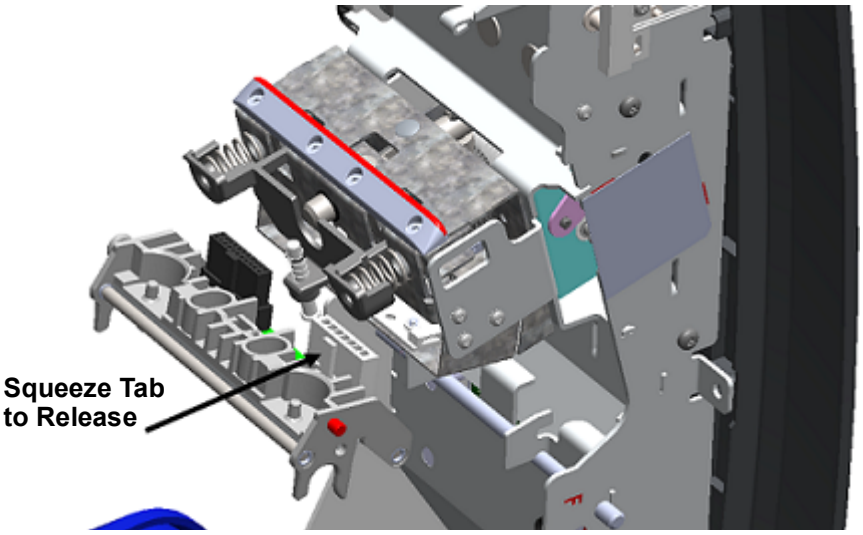

6. Insert the cable connectors into the new printhead.
7. While pulling the pin out, set the new printhead on its mounting.

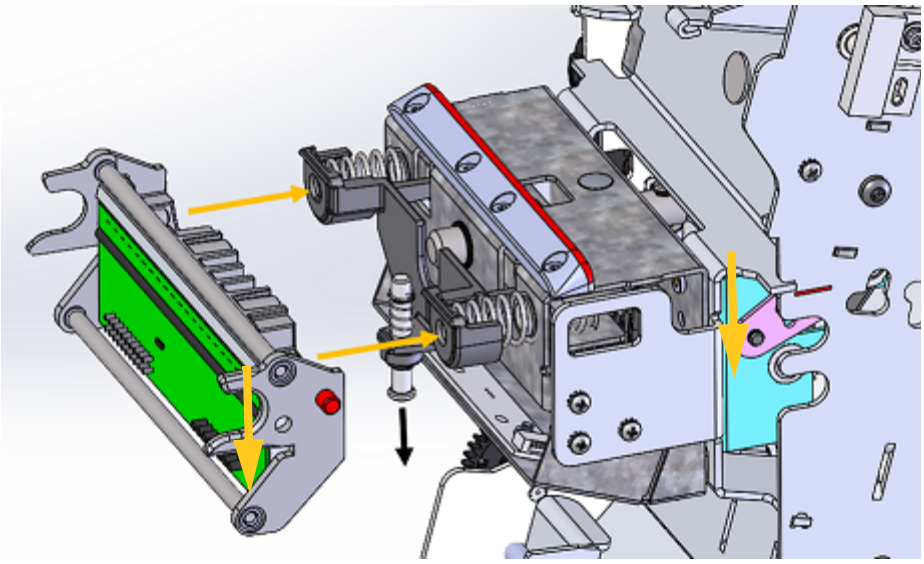

8. Release the pin to lock the printhead in place.
9. Reinstall the label supply and ribbon, then close the ribbon door and rear cover. See “Loading Supplies” on page 15.

9 Troubleshooting

Messages indicate the problem for the task being performed and also provide a possible corrective action. The following sections provide additional information for troubleshooting printer errors.

Depending upon the severity, you may not be able to continue until the error has been corrected. These icons display on the printer when an error has occurred.

Error - the printer cannot continue the current print job or start a new one. This can also mean that the requested operation has failed.

Warning - the printer can print the current job but cannot receive new print jobs.

Information - this is informational only; it does not stop the current print job nor does it prevent the printer from receiving new jobs.

Error/Severity	Cause	Corrective Action
Printer cover opened during printing. Error 16	Printer cover is open.	Close cover to continue.
Printer too warm. Error 18	The printhead is too hot.	The printhead has reached maximum operating temperature. Let the printhead cool down for approximately 10 minutes, then re-initiate the print job.
Media wiper arm open. Error 21	The media wiper arm is in an open position.	Close the wiper arm or press OK to continue.
Media wiper arm closed. Error 22	The media wiper arm is in closed position when it should be open.	Open the wiper arm or press OK to continue
Error reading media memory cell. Error 48	Media sensor cannot detect supply type.	Remove and replace media. See Loading Supplies on page 15. Clean Sensors on page 97. If the error persists, contact Technical Support.

Error/Severity	Cause	Corrective Action
Error reading media memory cell. Error 49	Printer cannot read/write to the smart cell.	Remove and replace labels. See Loading Supplies on page 15. Clean Sensors on page 97. If the error persists, contact Technical Support.
Error reading media memory cell. Error 50	Data may be corrupted.	Open cover and install label correctly. The message automatically clears. If error persists, contact Technical Support.
Error reading media memory cell. Error 51	The smart cell is the wrong version. - or - Printer class is not valid. - or - Printer version is not valid.	Open cover, remove and re-install labels. The message automatically clears. If error persists, contact Technical Support.
Media remaining value has reached 0. Error 52	Label or ribbon has been exhausted.	Replace the depleted supply. See Loading Supplies on page 15.
Media sensor shows end of media. Error 53	Label supply has been used up or is incorrectly installed.	Insert a new label roll if used up. - or - Feed the leading edge of the labels past the indicator and verify media guides are positioned correctly. See Installing Labels on page 17.
Media is jammed. Error 54	Labels are jammed along the media path.	Clear the jam by gently removing any crumpled media from the media path. - or - 1. Remove the label roll. 2. Cut off the crumpled end. 3. Re-insert the label roll. See Installing Labels on page 17.

Error/Severity	Cause	Corrective Action
Media not loaded correctly. Error 55	Label supply is incorrectly installed.	Feed the leading edge of the labels past the indicator and verify media guides are positioned correctly. See Installing Labels on page 17.
Ribbon Out Error 58	Ribbon has reached the end.	Replace ribbon and close printer cover. See Installing the Ribbon on page 15.
Install ribbon color xxx. Error 63	The ribbon is the wrong color for the job. Message displays when the selected ribbon color is not found in the label panel. If a spot color paneled ribbon is installed when the user picks the current ribbon, the next color panel on the ribbon is used to print the requested color. If a monochrome ribbon is installed when the user picks the current ribbon, the print job continues with the installed color. If the user opens and closes the printer cover, the printer checks the new ribbon color and resumes printing if the requested color is available. If the requested color is not available on the new ribbon, the **Ribbon Color** prompt is redisplayed.	Install the ribbon color prompted or press OK to continue.
Error reading ribbon memory cell. Insert ribbon memory cell again or replace ribbon. Error 64	The smart cell on the ribbon is not being read or read correctly.	Replace ribbon if it is at the end, otherwise remove and reinstall the ribbon. If the error persists, contact Technical Support.
Error reading ribbon memory cell. Insert ribbon memory cell again or replace ribbon. Error 65	No ribbon is installed or is installed incorrectly.	Replace ribbon if it is at the end, otherwise remove and reinstall the ribbon. If the error persists, contact Technical Support.

Error/Severity	Cause	Corrective Action
Error reading ribbon memory cell. Insert ribbon memory cell again or replace ribbon. Error 66	Data may be corrupted.	Replace ribbon if it is at the end, otherwise remove and reinstall the ribbon. If the error persists, contact Technical Support.
Error reading ribbon memory cell. Insert ribbon memory cell again or replace ribbon. Error 67	The Ribbon cell is the wrong version. - or - Printer class is not valid. - or - Printer version is not valid.	Open cover, remove and re-install ribbon. The message automatically clears. If error persists, contact Technical Support.
Ribbon remaining value has reached 0. Error 68	Ribbon has reached the end.	Replace ribbon and close printer cover. See Installing the Ribbon on page 15.
Installed ribbon is not recommended for use with current media. Error 69	Installed ribbon is not compatible with the installed labels.	Replace the ribbon with one that is compatible with the installed label supply. Check your local Brady website for ribbon and label supply compatibility.
Cutter jammed. Error 80	There is a jam in the area by the cutter.	Remove the side panel, manually move the cutter and clear the jam. See Cutter Blade on page 94. **Warning: Cutter blade is sharp! Take care to avoid injury.**
Expected color not found: xxx Error 84	The expected color panel not detected. The printer timed out searching for the correct color panel. The memory cell indicates the color is there but the system can't find it.	Clean the color sensor by following step 5 in Sensors on page 97. If that does not clear the error, then replace the ribbon. If error persists, contact Technical Support.
Media jammed at eject path. Error 88	Media is jammed at the label exit chute.	Clear the jam within the label exit chute.

Error/Severity	Cause	Corrective Action
Printhead not aligned. Error 89	Something is blocking the printhead from engaging properly.	Open the cover and remove any obstruction preventing the printhead from engaging properly. If the error persists, contact Technical Support.
For 15" Panel Use monochrome ribbon. For 8" Panel Use 15 inch panel or monochrome ribbon. Error 91	The inserted ribbon is incompatible with the ribbon used to create the label.	Install either a 15 inch panel or monochrome ribbon depending on the error message shown.
Pinch roller is unable to engage media. Error 93	Something is blocking the pinch roller from engaging properly with the tape.	Open the cover and remove any debris or obstructions that is preventing the pinchroller from engaging properly.
Storage space for print jobs is getting low. Error 95	The number of print jobs is getting close to exceeding the storage limit.	Wait for the current print job to complete before sending the next print job.
The system could not read the printer's Label Library file. Error 97	The Label Library file is out of date.	Import a new Label Library file. See Updating Printer Label Library Values on page 92.
The installed labels are not listed in the printer's Label Library. The printer will use default values. Error 98	The Label Library file is out of date.	For optimal printing results, update the printer's Label Library. See Updating Printer Label Library Values on page 92.
Installed ribbon is not compatible. Error 99	The installed ribbon is incorrect for the print job.	Use a monochrome ribbon or a spot color ribbon.

Error/Severity	Cause	Corrective Action
XY cutter motor cannot find its home position. Error 103	The printer needs to be reset.	Open and close the cover and try again.
XY cutter carriage is not plugged in. Error 104	The printer needs to be reset.	Power the printer off and back on and try again.

These situations do not produce an error code but may help resolve the problem.

Problem	Cause	Corrective Action
Keyboard works intermittently or not at all.	One or more keys is stuck in depressed state.	Identify any keys stuck in down position. Repress key to unstick. Clean the keyboard. See Cleaning the Printer on page 93.
Media shifts when printing frames around label causing a slight misalignment of the frame.	Media guides not adjusted correctly, producing slack that allows the tape to shift during printing.	Adjust media guides so they are snug against the media. To make fine adjustments to the frame, see Adjusting Print Offset on page 56.
Text too long for more than one color. Press any key to continue.	Occurs when a continuous color monochrome ribbon is installed and the printer detects a second color in a new area. If the existing text is already longer than the supported maximum label length, you are prompted to replace the ribbon. Occurs when a continuous color monochrome ribbon is installed and a second color is added to the label. If the existing text already exceeds the maximum for multi-color output, user is prompted to replace the ribbon. In both of these examples, the only way to successfully print the label is to use monocolor ribbons and swap them out between passes.	Replace ribbon.
Printer does not power up when turned on.	Power cord has been pulled out of printer or wall socket.	Check power cord.
Screen freezes; the screen is white, there is an hourglass on the display.	User Interface error	If the screen is frozen, see Resetting the Printer on page 115. If that does not resolve the issue, update the firmware. See Upgrading Firmware on page 91.

Problem	Cause	Corrective Action
Faint print on labels.	Ribbon not advancing correctly.	Tension the ribbon by rotating the rewind spool (top spool) in a downward direction until all slack is removed. Try another ribbon cartridge.
	Print energy might be too low.	Adjust the print-energy setting. See Print Energy on page 55.
	Media may be incompatible.	Confirm that labels and ribbon are compatible. Check your local Brady website for ribbon and label supply compatibility.
No print on the label.	The label or ribbon is not loaded correctly or out of ribbon.	Reinstall the ribbon cartridge. - or - Load a new ribbon.
Poor print quality.	Ribbon and label media are incompatible, or using an incorrect label material and ribbon combination.	Verify the correct ribbon for the label roll is loaded in the printer. - or - Change the ribbon or label combination.
	Dust or adhesives accumulated on the printhead.	Clean the printhead. See Printhead on page 99.
	Media wiper dirty.	Clean the media wiper or replace the pad. See Media Wiper on page 100.
Void areas or lines appear on printed text.	Ribbon wrinkling.	Tension the ribbon by rotating the spool until all slack is removed. Try another ribbon cartridge.
Ribbon feeding out along with the label.	Media is not compatible or the printer needs cleaning.	Clean the printer. See Cleaning the Printer on page 93. If the problem is not resolved, confirm that labels and ribbon are compatible. Check your local Brady website for ribbon and label supply compatibility. If the problem persists, contact Technical Support.

Problem	Cause	Corrective Action
Labels are being cut incorrectly or too deeply when using the XY cutter.	Blade height, cut depth or cut accuracy may need adjusting.	Verify the blade height. See XY Cutter Blade Height on page 58. Adjust the cut depth. See XY Cutting on page 57. Adjust the cut accuracy. See Adjusting Cutter Accuracy on page 59.
Current ribbon color: Black For this multi-color job, load this ribbon last. To continue, load another required ribbon, then press any key.	Currently installed ribbon is a continuous color monochrome black ribbon. If multi-color print job is selected, the label quality is better when black is printed on top of the other colors.	Load required ribbon color.

Resetting the Printer

If the screen “freezes” (i.e., does not accept any keystrokes), reset the printer.

1. Press and hold the power button for 5 seconds.
   The system performs the initialization process and starts the printer.

Note: If the printer still does not initialize after holding the power button:

2. Use the On/Off switch to turn the power off and back on.

IMPORTANT! Any data in the Editor at the time of the reset will be lost.

A Reference Images

PreMade Labels Reference Images - Europe

For information about the available labels for Europe contact your local Sales Representative.

Note: PreMade Labels for Europe are available only in French, German, Italian and Dutch.

PreMade Labels Reference Images - North America

Reference the following labels when creating PreMade Labels.

Admittance, Exit, Confined Spaces

301 - 4" x 6"

302 - 4" x 6"

303 - 4" x 6"

304 - 4" x 6"

305 - 4" x 6"

306 - 4" x 6"

307 - 4" x 6"

308 - 4" x 6"

309 - 4" x 6"

310 - 4" x 6"

311 - 4" x 6"

312 - 4" x 6"

313 - 4" x 6"

314 - 4" x 6"

315 - 4" x 6"

316 - 4" x 6"

317 - 4" x 6"

318 - 4" x 6"

319 - 4" x 7"

320 - 4" x 7"

321 - 4" x 14"

322 - 4" x 14"

323 - 4" x 6"

324 - 4" x 6"

325 - 4" x 6"

Alerts and First Aid

326 - 4" x 6"

327 - 4" x 6"

328 - 4" x 10"

329 - 4" x 10"

330 - 4" x 10"

331 - 4" x 6"

332 - 4" x 6"

Chemical - Hazardous Materials

333 - 4" x 4"

334 - 4" x 6"

335 - 4" x 6"

336 - 4" x 6"

Conduit - Voltage

408 – 2.25" x 9"

409 – 2.25" x 9"

410 – 2.25" x 9"

411 – 2.25" x 9"

412 – 2.25" x 9"

Electrical Hazard - Lockout

337 - 3" x 5"

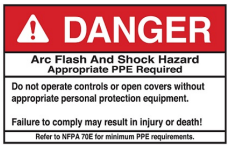

338 - 3" x 5"

339 - 3" x 5"

340 - 3" x 5"

341 - 4" x 6"

342 - 6" x 4"

343 - 8" x 4"

344 - 6" x 4"

345 - 6" x 4"

350 - 8" x 4"

351 - 4" x 10"

352 - 3" x 5"

354 - 2.25" x 5"

355 - 2.25" x 5"

356 - 2.25" x 5"

Fire

361 - 4" x 14"

362 - 4" x 14"

358 - 4" x 6"

359 - 4" x 6"

363 - 4" x 6"

365 - 4" x 10"

Funny Signs

366 - 4" x 6"

367 - 4" x 6"

368 - 4" x 10"

369 - 4" x 6"

370 - 4" x 6"

372 - 4" x 6"

371 - 4" x 6"

Graphics - Mandatory

Graphics - Packaging

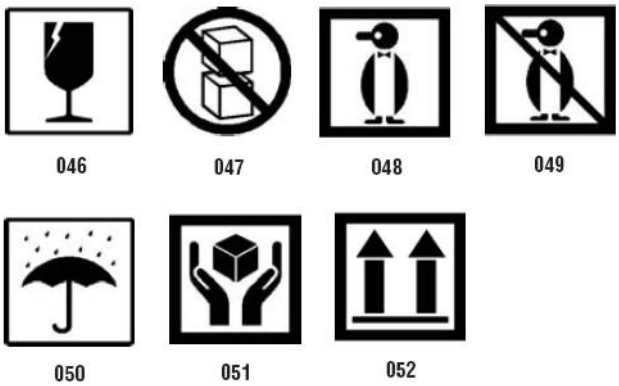

Graphics - PPE

Graphics - Prohibition

053

054

055

056

057

058

059

060

061

062

063

064

065

066

067

068

069

070

071

072

073

074

075

076

077

078

079

Graphics - Signal Words

080

081

086

087

088

089

090

091

094

095

096

099

Graphics - Warning

100

101

102

103

104

105

106

107

108

109

110

111

112

113

114

115

116

117

118

119

120

121

122

123

124

125

126

Inspection

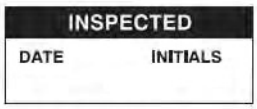

402 – 0.5" x 2"

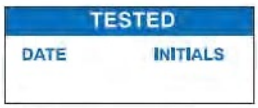

403 – 0.5" x 2"

Machine - Operational

374 - 4" x 6"

376 - 4" x 6"

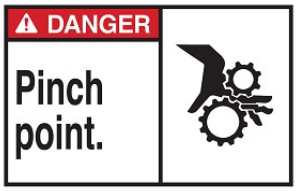

378 - 4" x 6"

379 - 4" x 6"

380 - 4" x 6"

381 - 4" x 6"

382 - 4" x 6"

384 - 4" x 6"

No Smoking

385 - 4" x 6"

386 - 4" x 6"

387 - 4" x 6"

389 - 4" x 6"

388 - 6" x 4"

Pipe Marker Arrows

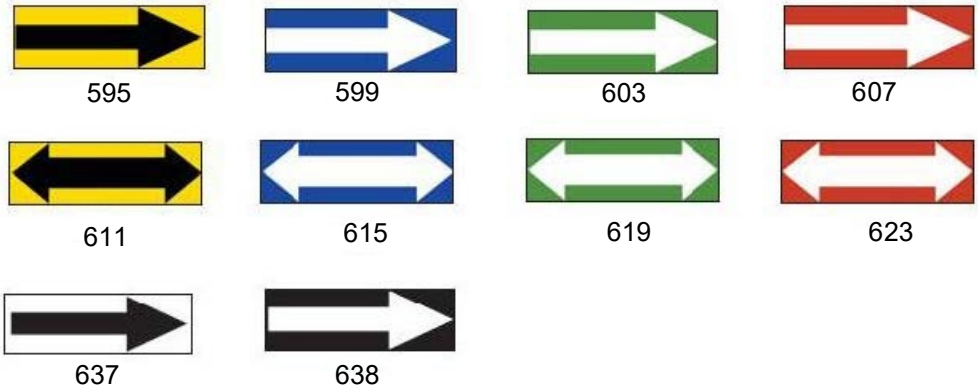

Pipe Markers

627

628

629

630

631

632

633

639

640

641

642

643

644

645

646

Protective

390 - 4" x 6"

391 - 4" x 6"

392 - 4" x 10"

393 - 4" x 10"

394 - 4" x 10"

395 - 4" x 10"

396 - 4" x 10"

397 - 4" x 10"

398 - 4" x 10"

Warning Stakes

399 - 14" x 3"

400 - 14" x 3"

401 - 14" x 3"

B Character Mapping & Keyboard Layouts

Keyboard configurations vary by region. See “Character Mapping” on page 131 for a list of accent characters available for each keyboard configuration. See “Keyboard Layouts” on page 135 for a graphical layout of the keyboard configurations.

When used in combination with the **<Shift>** and **<AltGr>** keys, the keyboards support multiple characters. The position in which the character appears on a keycap indicates which combination of keystrokes to use to access the character.

For a complete description of how to use the special characters, see “Adding Special Characters” on page 36.

Character Mapping

The following are the accent keys that are available for each of the keyboard layouts. To access the keys, just press the key and then the character (not simultaneously).

Americas QWERTY

Accent	Characters Affected
`	A, a, E, e, I, i, O, o, U, u
´	A, a, E, e, I, i, O, o, U, u, Y, y
^	A, a, E, e, I, i, O, o, U, u
~	N, n, O, o
¨	A, a, E, e, O, o, U, u
¸	C, c, K, k, G, g, N, n, L, l, R, r, S, s, T, t

European AZERTY

Accent	Characters Affected
`	A, a, E, e, I, i, O, o, U, u
´	A, a, E, e, I, i, O, o, U, u, Y, y, C, c, S, s, N, n
^	A, a, E, e, I, i, O, o, U, u
~	N, n, O, o, A, a
¨	A, a, E, e, O, o, U, u
ˇ	S, s, Z, z, C, c, T, t, N, n, E, e, R, r
˘	A, a, G, g
˝	U, u, O, o
°	A, a, U, u
¯	A, a, E, e, I, i, U, u
˙	E, e, Z, z, C, c
¸	C, c, K, k, G, g, N, n, L, l, R, r, S, s, T, t
˛	A, a, E, e, U, u

European QWERTZ

Accent	Characters Affected
`	A, a, E, e, I, i, O, o, U, u
´	A, a, E, e, I, i, O, o, U, u, Y, y, C, c, S, s, Y, y, N, n
^	A, a, E, e, I, i, O, o, U, u
~	N, n, O, o, A, a
¨	A, a, E, e, O, o, U, u
ˇ	S, s, Z, z, C, c, T, t, N, n, E, e, R, r
˘	A, a, G, g
˝	U, u, O, o
°	A, a, U, u
¯	A, a, E, e, I, i, U, u
˙	E, e, Z, z, C, c
¸	**C, c, K, k, G, g, N, n, L, l, R, r, S, s, T, t**
˛	**A, a, E, e, U, u**

European QWERTY

Accent	Characters Affected
`	A, a, E, e, I, i, O, o, U, u
´	A, a, E, e, I, i, O, o, U, u, Y, y, S, s, Z, z, C, c, N, n
^	A, a, E, e, I, i, O, o, U, u
~	N, n, O, o, A, a
¨	A, a, E, e, O, o, U, u
ˇ	S, s, Z, z, C, c, T, t, N, n, E, e, R, r
˘	A, a, G, g
˝	U, u, O, o
°	A, a, U, u
¯	A, a, E, e, I, i, U, u
˙	E, e, Z, z, C, c
¸	**C, c, K, k, G, g, N, n, L, l, R, r, S, s, T, t**
˛	**A, a, E, e, U, u**

European Cyrillic

Accent	Characters Affected
`	A, a, E, e, I, i, O, o, U, u

Keyboard Layouts

The following figures show the supported keyboard layouts for each of the configurations.

QWERTY - North America Keyboard Configuration

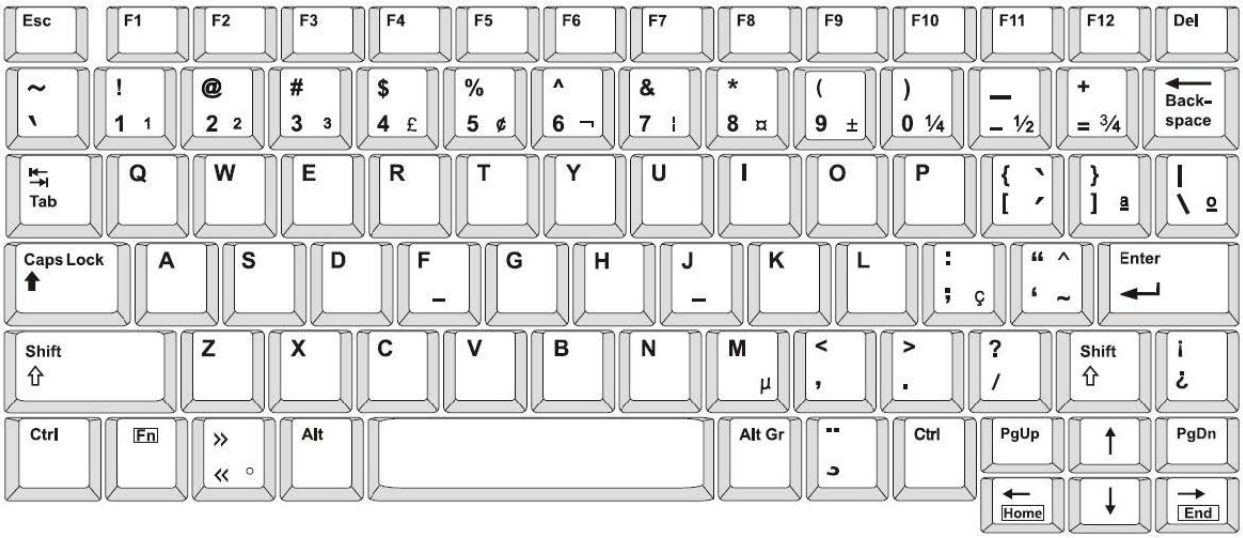

QWERTY - European Keyboard Configuration

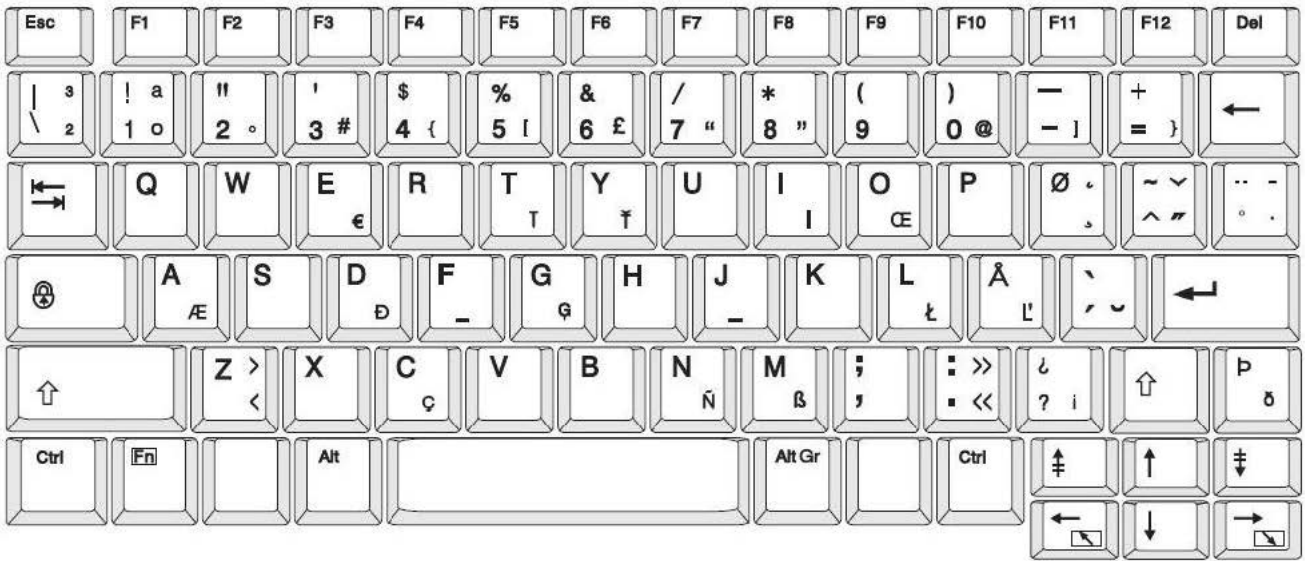

AZERTY - European Keyboard Configuration

QWERTZ - European Keyboard Configuration

CYRILLIC - European Keyboard Configuration

C Regulatory Compliance

Agency Compliance and Approvals

United States

FCC Notice

Note: This equipment has been tested and found to comply with the limits for a Class A digital device, pursuant to part 15 of the FCC Rules. These limits are designed to provide reasonable protection against harmful interference when the equipment is operated in a commercial environment. This equipment generates, uses, and can radiate radio frequency energy and, if not installed and used in accordance with the instruction manual, may cause harmful interference to radio communications.

Operation of this equipment in a residential area is likely to cause harmful interference in which case the user will be required to correct the interference at his own expense.

Changes or modifications not expressly approved by the party responsible for compliance could void the user's authority to operate the equipment.

This device complies with Part 15 of the FCC Rules. Operation is subject to the following two conditions: (1) This device may not cause harmful interference and, (2) this device must accept any interference received, including interference that may cause undesired operation.

Canada

Innovation, Science and Economic Development (ISED)

Canada ICES-003:

CAN ICES-3 (A)/NMB-3(A)

Mexico

IFT notice: La operación de este equipo está sujeta a las siguientes dos condiciones: (1) es posible que este equipo o dispositivo no cause interferencia perjudicial y (2) este equipo o dispositivo debe aceptar cualquier interferencia, incluyendo la que pueda causar su operación no deseada.

Europe

WARNING! This is a Class A product. In a domestic environment, this product may cause radio interference in which case the user may be required to take adequate measures.

Waste Electrical and Electronic Equipment Directive
In accordance with the European WEEE Directive, this device needs to be recycled in accordance with local regulations.

RoHS Directive 2011/65/EU, 2015/863/EU

This product is CE marked and complies with the European Union's Directive 2011/65/EU OF THE EUROPEAN PARLIAMENT AND OF THE COUNCIL of 8 June 2011 on the restriction of the use of certain hazardous substances in electrical and electronic equipment.

EU Directive 2015/863 of 31 March 2015 (RoHS 3) amends Annex II to Directive 2011/65/EU of the European Parliament and of the Council as regards the list of restricted substances.

Batteries Directive 2006/66/EC

This product contains a lithium coin cell battery. The crossed-out wheeled bin shown to the left is used to indicate 'separate collection' for all batteries and accumulators in accordance with European Directive 2006/66/EC. Users of batteries must not dispose of batteries as unsorted municipal waste. This Directive determines the framework for the return and recycling of used batteries and accumulators that are to be collected separately and recycled at end of life. Please dispose of the battery according to your local regulations.

Notice to Recyclers

To remove the lithium coin cell battery:

1. Disassemble printer and locate the lithium coin cell battery located on the main circuit board.
2. Using a small screwdriver, pry the battery from its holder and remove the battery from the board. Dispose of in accordance with local regulations.

Turkey

Turkish Ministry of Environment and Forestry

(Directive on the Restriction of the use of certain hazardous substances in electrical and electronic equipment).

Türkiye Cumhuriyeti: EEE Yönetmeliğine Uygundur

China

China RoHS Hazardous Substance Table related to this product is available at www.bradyid.com/S3700compliance.

警 告

此为 A 级产品。在生活环境中，该产品可能会造成无线电干扰。在这种情况下，可能需要用户对干扰采取切实可行的措施。

仅适用于非热带气候条件下安全使用

仅适用于海拔2000m 以下地区安全使用。

Wireless Regulatory Information

Regulatory markings, subject to country certification, are applied to host printer signifying Wi-Fi and Bluetooth (radio) approvals have been obtained.

WARNING! Operation of the device without regulatory approval is illegal.

Radio protocol	WLAN IEEE 802.11b/g/n	BLE
RF Operating Frequency	2.412 – 2.462 GHz	2.402 – 2.480 GHz
RF Output Power	< +20dBm EIRP (100mW)	< +20dBm EIRP (100mW)
Antenna Type \ Antenna Gain	PCB trace antenna \ 2.3 dBi	PCB trace antenna \ 2 dBi
Environmental Operation	-40 to 85° C (-40° to 185° F) **Note:** Be mindful of the maximum operating temperatures for the printer. See "Physical and Environmental Characteristics" on page 2.	
Environmental Storage	-55 to 125° C (-67° to 257° F) **Note:** Be mindful of the maximum storage temperatures for the printer. See "Physical and Environmental Characteristics" on page 2.	

United States

Note: This equipment has been tested and found to comply with the limits for a Class A digital device, pursuant to part 15 of the FCC Rules. These limits are designed to provide reasonable protection against harmful interference when the equipment is operated in a commercial environment. This equipment generates, uses, and can radiate radio frequency energy and, if not installed and used in accordance with the instruction manual, may cause harmful interference to radio communications.

Operation of this equipment in a residential area is likely to cause harmful interference in which case the user will be required to correct the interference at own expense.

Changes or modifications not expressly approved by the party responsible for compliance could void the user's authority to operate the equipment.

This device complies with Part 15 of the FCC Rules. Operation is subject to the following two conditions: (1) This device may not cause harmful interference and, (2) this device must accept any interference received, including interference that may cause undesired operation.

Co-located statements: To comply with FCC RF exposure compliance requirement, the antenna used for this transmitter must not be co-located or operating in conjunction with any other transmitter/antenna except those already with radio module filing.

RF exposure guidelines / Important note: This equipment complies with FCC RF Exposure requirements set forth for an uncontrolled environment when properly used as instructed.

Canada

Innovation, Science and Economic Development (ISED)

CAN ICES-3 (A)/NMB-3(A)

This device complies with Industry Canada's license-exempt RSSs. Operation is subject to the following two conditions:

1. This device may not cause interference; and
2. This device must accept any interference, including interference that may cause undesired operation of the device.

Co-located statements: To comply with IC RF exposure compliance requirement, the antenna used for this transmitter must not be co-located or operating in conjunction with any other transmitter/antenna except those already with radio module filing.

RF exposure guidelines / Important note: This equipment complies with IC RF Exposure requirements set forth for an uncontrolled environment when properly used as instructed.

Mexico

IFT notice:

"La operación de este equipo está sujeta a las siguientes dos condiciones: (1) es posible que este equipo o dispositivo no cause interferencia perjudicial y (2) este equipo o dispositivo debe aceptar cualquier interferencia, incluyendo la que pueda causar su operación no deseada."

European Union

This is a Class A product. In a domestic environment, this product may cause radio interference in which case the user may be required to take adequate measures.

Radio Equipment Directive (RED) 2014/53/EC

a. Frequency band(s) in which the radio equipment operates; 2.401GHz to 2.483GHz
b. Maximum radio-frequency power transmitted in the frequency band(s) in which the radio equipment operates; < +20dBm EIRP (100mW)

Hong Kong

South Africa

TA-2023 / 0650

Brazil

22567-23-11636

International

The Wi-Fi radio module used in Brady host printers comply with internationally recognized standards covering human exposure to electromagnetic fields, i.e. EN 62311 "Assessment of electronic and electrical equipment related to human exposure restrictions for electromagnetic fields (0 Hz - 300 GHz)".

D Licensing

End User License Agreement for Microsoft Windows CE©

You have acquired a device that includes software licensed by Brady Worldwide, Inc. from Microsoft Licensing or its affiliates (“MS”). Those installed software products of Microsoft origin, as well as associated media, printed materials, and “online” or electronic documentation (“SOFTWARE”) are protected by international intellectual property laws and treaties. The SOFTWARE is licensed, not sold. All rights reserved.

IF YOU DO NOT AGREE TO THIS END USER LICENSE AGREEMENT, DO NOT USE THE DEVICE OR COPY THE SOFTWARE. INSTEAD, PROMPTLY CONTACT BRADY WORLDWIDE, INC. FOR INSTRUCTIONS ON RETURN OF THE UNUSED DEVICE FOR A REFUND. **ANY USE OF THE SOFTWARE, INCLUDING BUT NOT LIMITED TO USE ON THE DEVICE, WILL CONSTITUTE YOUR AGREEMENT TO THIS END USER LICENSE AGREEMENT (OR RATIFICATION OF ANY PREVIOUS CONSENT).**

GRANT OF SOFTWARE LICENSE: This End User License Agreement grants you the following license:

You may use the SOFTWARE only on the DEVICE.

NOT FAULT TOLERANT. THE SOFTWARE IS NOT FAULT TOLERANT. BRADY WORLDWIDE, INC. HAS INDEPENDENTLY DETERMINED HOW TO USE THE SOFTWARE IN THE DEVICE, AND MS HAS RELIED UPON BRADY WORLDWIDE, INC. TO CONDUCT SUFFICIENT TESTING TO DETERMINE THAT THE SOFTWARE IS SUITABLE FOR SUCH USE.

NO WARRANTIES FOR THE SOFTWARE. **The SOFTWARE is provided “as is” and with all faults. THE ENTIRE RISK AS TO SATISFACTORY QUALITY, PERFORMANCE, ACCURACY, AND EFFORT (INCLUDING LACK OF NEGLIGENCE) IS WITH YOU. ALSO, THERE IS NO WARRANTY AGAINST INTERFERENCE WITH YOUR ENJOYMENT OF THE SOFTWARE OR AGAINST INFRINGEMENT.** IF YOU HAVE RECEIVED ANY WARRANTIES REGARDING THE DEVICE OR THE SOFTWARE, THOSE WARRANTIES DO NOT ORIGINATE FROM, AND ARE NOT BINDING ON, MS.

Note on Java support. The SOFTWARE may contain support for programs written in Java. Java technology is not fault tolerant and is not designed, manufactured, or intended for use or resale as online control equipment in hazardous environments requiring fail-safe performances, such as in the operation of nuclear facilities, aircraft navigation or communication systems, air traffic control, direct life support machines, or weapons systems, in which the failure of Java technology could lead directly to death, personal injury, or severe physical or environmental damage. Sun Microsystems, Inc. has contractually obligated MS to make this disclaimer.

No Liability for Certain Damages. EXCEPT AS PROHIBITED BY LAW, MS SHALL HAVE NO LIABILITY FOR ANY INDIRECT, SPECIAL, CONSEQUENTIAL OR INCIDENTAL DAMAGES ARISING FROM OR IN CONNECTION WITH THE USE OR PERFORMANCE OF THE SOFTWARE. THIS LIMITATION SHALL APPLY EVEN IF ANY REMEDY FAILS OF ITS ESSENTIAL PURPOSE. IN

NO EVENT SHALL MS BE LIABLE FOR ANY AMOUNT IN EXCESS OF U.S. TWO HUNDRED FIFTY DOLLARS (U.S.$250.00).

Limitations on Reverse Engineering, Decompilation, and Disassembly. You may not reverse engineer, decompile, or disassemble the SOFTWARE, except and only to the extent that such activity is expressly permitted by applicable law not withstanding this limitation.

SOFTWARE TRANSFER ALLOWED BUT WITH RESTRICTIONS. You may permanently transfer rights under this End User License Agreement only as part of a permanent sale or transfer of the Device, and only if the recipient agrees to this End User License Agreement. If the SOFTWARE is an upgrade, any transfer must also include all prior versions of the SOFTWARE.

EXPORT RESTRICTIONS. You acknowledge that SOFTWARE is of US-origin. You agree to comply with all applicable international and national laws that apply to the SOFTWARE, including the U.S. Export Administration Regulations, as well as end-user, end-use, and country destination restrictions issued by U.S. and other governments. For additional information on exporting the SOFTWARE, see http://www.microsoft.com/exporting.